National Construction Code

Volume One
Building Code of Australia

Australian Building Codes Board

2022

Copyright and Licence Notice

© Commonwealth of Australia and the States and Territories of Australia 2022, published by the Australian Building Codes Board

The material in this publication is licensed under a Creative Commons Attribution 4.0 International licence, with the exception of:

- any third party material
- any trade marks, and
- any images or photographs.

More information on this CC BY 4.0 licence is set out at the Creative Commons Website.

Enquiries about this publication can be sent to:

Australian Building Codes Board
GPO Box 2013, Canberra ACT 2601

Phone: 1300 134 631

Email: ncc@abcb.gov.au

Web: abcb.gov.au

Attribution

Use of all or part of this publication must include the following attribution: The National Construction Code 2022 was provided by the Australian Building Codes Board under the CC BY 4.0 licence.

Disclaimer

By accessing or using this publication, you agree to the following:

While care has been taken in the preparation of this publication, it may not be complete or up-to-date. You can ensure that you are using a complete and up-to-date version by checking the Australian Building Codes Board website (abcb.gov.au).

The Australian Building Codes Board, the Commonwealth of Australia and States and Territories of Australia do not accept any liability, including liability for negligence, for any loss (howsoever caused), damage, injury, expense or cost incurred by any person as a result of accessing, using or relying upon this publication, to the maximum extent permitted by law. No representation or warranty is made or given as to the currency, accuracy, reliability, merchantability, fitness for any purpose or completeness of this publication or any information which may appear on any linked websites, or in other linked information sources, and all such representations and warranties are excluded to the extent permitted by law.

This publication is not legal or professional advice. Persons rely upon this publication entirely at their own risk and must take responsibility for assessing the relevance and accuracy of the information in relation to their particular circumstances.

General table of contents

Preface

Copyright and Licence Notice 2
Introduction to the National Construction Code (NCC) 9
Introduction to NCC Volume One 11
List of NCC Specifications 12
History of adoption of NCC Volume One 14
List of amendments - NCC 2022 Volume One 23

Section A Governing requirements

Part A1 Interpreting the NCC 41
Part A2 Compliance with the NCC 44
Part A3 Application of the NCC in States and Territories 48
Part A4 Referenced documents 49
Part A5 Documentation of design and construction 51
Part A6 Building classification 58
Part A7 United buildings 70
Specification 1 Fire-resistance of building elements 72
Specification 2 Descriptions of elements referred to in Specification 1 78
Specification 3 Fire hazard properties 84

Section B Structure

Part B1 Structural provisions 86
Specification 4 Design of buildings in cyclonic areas 96

Section C Fire resistance

Part C1 Fire resistance 101
Part C2 Fire resistance and stability 108
Part C3 Compartmentation and separation 116
Part C4 Protection of openings 124
Specification 5 Fire-resisting construction 131
Specification 6 Structural tests for lightweight construction 149
Specification 7 Fire hazard properties 153
Specification 8 Performance of external walls in fire 158
Specification 9 Cavity barriers for fire-protected timber 160
Specification 10 Fire-protected timber 162
Specification 11 Smoke-proof walls in health-care and residential care buildings 164
Specification 12 Fire doors, smoke doors, fire windows and shutters 166
Specification 13 Penetration of walls, floors and ceilings by services 168

Section D Access and egress

Part D1 Access and egress 174
Part D2 Provision for escape 183
Part D3 Construction of exits 196
Part D4 Access for people with a disability 212
Specification 14 Non-required stairways, ramps and escalators 221
Specification 15 Braille and tactile signs 223
Specification 16 Accessible water entry/exit from swimming pools 225

Section E Services and equipment

Part E1 Fire fighting equipment 233
Part E2 Smoke hazard management 242
Part E3 Lift installations 253
Part E4 Visibility in an emergency, exit signs and warning systems 261
Specification 17 Fire sprinkler systems 266
Specification 18 Class 2 and 3 buildings not more than 25 m in effective height 269
Specification 19 Fire control centres 272
Specification 20 Smoke detection and alarm systems 275
Specification 21 Smoke exhaust systems 280
Specification 22 Smoke-and-heat vents 284
Specification 23 Residential fire safety systems 285
Specification 24 Lift installations 289
Specification 25 Photoluminescent exit signs 291

Section F Health and amenity

Part F1 Surface water management, rising damp and external waterproofing 297
Part F2 Wet areas and overflow protection 303
Part F3 Roof and wall cladding 306
Part F4 Sanitary and other facilities 312
Part F5 Room heights 329
Part F6 Light and ventilation 332
Part F7 Sound transmission and insulation 339
Part F8 Condensation management 345
Specification 26 Waterproofing and water-resistance requirements for building elements in wet areas 349
Specification 27 Accessible adult change facilities 352
Specification 28 Sound insulation for building elements 359
Specification 29 Impact sound – test of equivalence 374

Section G Ancillary provisions

Part G1 Minor structures and components 379

Part G2 Boilers, pressure vessels, heating appliances, fireplaces, chimneys and flues ...384
Part G3 Atrium construction 387
Part G4 Construction in alpine areas....389
Part G5 Construction in bushfire prone areas....393
Part G6 Occupiable outdoor areas 399
Part G7 Livable housing design....401
Specification 30 Installation of boilers and pressure vessels 403
Specification 31 Fire and smoke control systems in buildings containing atriums....405
Specification 43 Bushfire protection for certain Class 9 buildings....412

Section I Special use buildings
Part I1 Class 9b buildings 418
Part I2 Public transport buildings 420
Part I3 Farm buildings and farm sheds 423
Specification 32 Construction of proscenium walls....427

Section J Energy efficiency
Part J1 Energy efficiency performance requirements....433
Part J2 Energy efficiency 439
Part J3 Elemental provisions for a sole-occupancy unit of a Class 2 building or a Class 4 part of a building....441
Part J4 Building fabric 471
Part J5 Building sealing 476
Part J6 Air-conditioning and ventilation 479
Part J7 Artificial lighting and power 493
Part J8 Heated water supply and swimming pool and spa pool plant 501
Part J9 Energy monitoring and on-site distributed energy resources....504
Specification 33 Additional requirements 508
Specification 34 Modelling parameters for J1V3....510
Specification 35 Modelling profiles for J1V3 514
Specification 36 Material properties....526
Specification 37 Calculation of U-Value and solar admittance....531
Specification 38 Spandrel panel thermal performance....535
Specification 39 Sub-floor and soil thermal performance 537
Specification 40 Lighting and power control devices 539
Specification 44 Calculation of heating load limit, cooling load limit and thermal energy load limit542
Specification 45 Modelling profiles for J1V5 545

Schedule 1 Definitions
Abbreviations 559
Symbols....561

Glossary 563

Schedule 2 Referenced documents

Referenced documents 599

Schedule 3 Commonwealth of Australia

Footnote: Other legislation and policies affecting buildings 617

Schedule 4 Australian Capital Territory

ACT Introduction 623

ACT Footnote: Other legislation affecting buildings 624

Schedule 5 New South Wales

NSW Introduction 632

Section A Governing requirements 633

Section C Fire resistance 634

Section D Access and egress 639

Section E Services and equipment 646

Section F Health and amenity 650

Section G Ancillary provisions 652

Section I Special use buildings 656

NSW Part I4 Entertainment venues other than temporary structures and drive-in theatres 657

NSW Part I5 Temporary structures 669

NSW Part I6 Drive-in theatres 673

Section J Energy efficiency 674

NSW Part J1 Energy efficiency 686

Schedule 1 Definitions 692

Schedule 2 Referenced documents 694

NSW Footnote: Other legislation affecting buildings 696

Schedule 6 Northern Territory

NT Introduction 704

Section B Structure 705

Section E Services and equipment 708

Section F Health and amenity 709

NT Part F7 Sound transmission and insulation 712

Section G Ancillary provisions 716

Section J Energy efficiency 717

Schedule 2 Referenced documents 718

NT Footnote: Other legislation affecting buildings 719

Schedule 7 Queensland

QLD Introduction 723

Section B	Structure	724
Section G	Ancillary provisions	727
Schedule 1	Definitions	729
Schedule 2	Referenced documents	730
QLD	Footnote: Other legislation affecting buildings	731

Schedule 8 South Australia

SA	Introduction	735
Section A	Governing requirements	736
Section B	Structure	737
Section C	Fire resistance	738
Section D	Access and egress	740
Section E	Services and equipment	744
Section F	Health and amenity	749
Section G	Ancillary provisions	753
SA Part G8	Access for maintenance	755
SA Part G9	Miscellaneous provisions	757
Section I	Special use buildings	758
SA Part I3	Farm buildings	759
Schedule 1	Definitions	760
Schedule 2	Referenced documents	762
SA	Footnote: Other legislation affecting buildings	763

Schedule 9 Tasmania

TAS	Introduction	774
Section A	Governing requirements	775
Section D	Access and egress	777
Section E	Services and equipment	778
Section F	Health and amenity	779
Section G	Ancillary provisions	780
Section I	Special use buildings	784
TAS Part I4	Food premises	785
TAS Part I5	Dining rooms and bar rooms	795
TAS Part I6	Meat premises	796
TAS Part I7	Farm dairy premises	797
TAS Part I8	Pharmacies	799
TAS Part I9	Health service establishments	801
TAS Part I10	Mortuaries	802
TAS Part I11	Foundries	804
TAS Part I12	Premises for manufacture or processing of glass reinforced plastics	806

TAS Part I13	Premises for production of processing of isocyanates	808
TAS Part I14	Premises for electro-plating, electro-polishing, anodising or etching	810
TAS Part I15	Premises for lead processing	811
TAS Part I16	Early childhood centres and school age care facilities	813
TAS Part I18	Temporary structures	815
TAS Part I17	Premises where work is undertaken on gas-fuelled vehicles	820
Section J	Energy efficiency	821
Schedule 1	Definitions	822
Schedule 2	Referenced documents	823
TAS	Footnote: Other legislation affecting buildings	827

Schedule 10 Victoria

VIC	Introduction	830
Section A	Governing requirements	831
Section B	Structure	832
Section C	Fire resistance	833
Section D	Access and egress	834
Section E	Services and equipment	835
Section F	Health and amenity	838
Section G	Ancillary provisions	841
Section I	Special use buildings	845
VIC Part I4	Class 3 and 9a residential aged care buildings and Class 9c buildings	846
VIC Part I5	Places of public entertainment	848
VIC Part I6	Class 9b children's services	851
Schedule 1	Definitions	852
Schedule 2	Referenced documents	854
VIC	Footnote: Other legislation affecting buildings	860

Schedule 11 Western Australia

WA	Introduction	867
Section B	Structure	868
WA Part B2	Changes to AS/NZS 1170.2:2021	873
Section I	Special use buildings	876
WA Part I4	Public buildings	877
Schedule 1	Definitions	879
Schedule 2	Referenced documents	880
WA	Footnote: Other legislation affecting buildings	881

Introduction to the National Construction Code (NCC)

About the NCC

The NCC is Australia's primary set of technical design and construction provisions for buildings. As a performance-based code, it sets the minimum required level for the safety, health, amenity, accessibility and sustainability of certain buildings. It primarily applies to the design and construction of new buildings, and plumbing and drainage systems in new and existing buildings. In some cases it may also apply to structures associated with buildings and new building work or new plumbing and drainage work in existing buildings.

The Australian Building Codes Board (ABCB), on behalf of the Australian Government and each State and Territory government, produces and maintains the NCC. When determining the content of the NCC, the ABCB seeks to—

- ensure requirements have a rigorously tested rationale; and
- effectively and proportionally address applicable issues; and
- create benefits to society that outweigh costs; and
- consider non-regulatory alternatives; and
- consider the competitive effects of regulation; and
- not be unnecessarily restrictive.

The primary users of the NCC include architects, builders, plumbers, building surveyors, hydraulic consultants, engineers and other building and plumbing related professions and trades.

Format of the NCC

The NCC is published in three volumes. The Building Code of Australia (BCA) is Volumes One and Two of the NCC and the Plumbing Code of Australia (PCA) is Volume Three of the NCC.

Components of the NCC

The NCC provides the technical provisions for the design and construction of buildings and other structures, and plumbing and drainage systems.

NCC Volume One primarily covers the design and construction of multi-residential, commercial, industrial and public assembly buildings and some associated structures.

NCC Volume Two primarily covers the design and construction of smaller scale buildings including houses, small sheds, carports and some associated structures.

NCC Volume Three covers the design, construction and maintenance of plumbing and drainage systems in new and existing buildings.

Each volume contains—

- Governing Requirements; and
- Performance Requirements; and
- compliance options to meet the NCC requirements; and
- State and Territory variations and additions.

The NCC uses building classifications to identify requirements for different intended purposes of buildings or parts of buildings. A building classification relates to the characteristics and the intended use of the building. Information on building classifications is found in Part A6 of the Governing Requirements.

Legislative arrangements and the NCC

The NCC is given legal effect through State and Territory, or other statutory authority, building and plumbing legislation. These Acts and Regulations set out the legal framework and administration mechanisms for the NCC to support the design and construction of buildings.

The dates of adoption of the NCC are determined by State and Territory building and plumbing administrations.

How to use the NCC

Each volume of the NCC is split into two main sections:

- Administrative requirements contained within the Governing Requirements.
- Technical requirements contained within the remaining sections of the NCC.

The Governing Requirements provide the rules and instructions for using and complying with the NCC. They are vital in understanding how the technical requirements of the NCC should be applied to any particular situation. The Governing Requirements are also important in understanding how the NCC fits with the building and plumbing regulatory framework within Australia.

NCC clause numbering system

The NCC uses a uniform clause numbering system across each of its three volumes. This system is called Section-Part-Type-Clause (SPTC). In each clause number—

- The first letter indicates which NCC Section sits within, or if the letter S is used, that the clause is part of a Specification. The letter S is used in place of a Section indicator because the same Specification may be called up in several different Sections of the NCC.
- The first number indicates the number of each Part within a Section, or the number of a Specification. Parts are numbered sequentially within each Section, starting at 1. Specifications are numbered sequentially across all three volumes, also starting at 1.
- The second letter indicates the clause Type. It will be G, O, F, P, V, D or C and these are explained below.
- The second number is the clause number within each Part or Specification.

The clause Types used in the NCC are as follows:

- G = Governing requirement (mandatory)
- O = Objective (guidance)
- F = Functional Statement (guidance)
- P = Performance Requirement (mandatory)
- V = Verification Method (optional)
- D = Deemed-to-Satisfy Provision (optional)
- C = Clause in a Specification (clauses in Specifications may be mandatory or optional, depending on how the Specification is called up by the NCC).

Informative parts of the NCC (e.g. Introduction to the NCC) are not numbered and do not have numbered paragraphs. This helps make it easy to see that their content is information only and does not contain any regulatory requirements.

Introduction to NCC Volume One

About NCC Volume One

NCC Volume One contains technical design and construction requirements for all Class 2 to 9 buildings (multi-residential, commercial, industrial, and public assembly buildings) and their associated structures.

NCC Volume One contains the requirements for—

- all Class 2 to 9 buildings; and
- access requirements for people with a disability in Class 1b and 10a buildings; and
- certain Class 10b structures including access requirements for people with a disability in Class 10b swimming pools.

Components of NCC Volume One

NCC Volume One contains the following Sections:

- Section A – Governing Requirements
- Section B – Structure
- Section C – Fire resistance
- Section D – Access and egress
- Section E – Services and equipment
- Section F – Health and amenity
- Section G – Ancillary provisions
- Section I – Special use buildings
- Section J – Energy efficiency
- Schedules—
  - Abbreviations and symbols
  - Definitions
  - Referenced documents
  - State and Territory variations and additions

Section A contains the mandatory Governing Requirements for the NCC. Sections B to G and I to J contain the mandatory Performance Requirements and the pathways that can be used to comply with the NCC.

There is no Section H in NCC Volume One because the letter ‘H’ is used in NCC Volume Two. This avoids number clashes between NCC Volume One and NCC Volume Two.

List of NCC Specifications

Table 1 sets out the number and title of each NCC Specification, along with the clauses in each NCC Volume that refer to the Specification.

Table 1: List of NCC Specifications

Spec no.	Title	References	
		Vols. One, Two and Housing Provisions	Vol. Three
1	Fire resistance of building elements	A5G5; A5G6; C4D15; S2C1; S9C2	A5G5; A5G6
2	Description of materials referred to in Specification 1	A5G5; A5G6; C4D15; S1C2; S9C2	A5G5; A5G6
3	Fire hazard properties (determination)	A5G6	A5G6
4	Design of buildings in cyclonic areas	B1D3	-
5	Fire-resisting construction	C2D2; C2D10; C3D6; C3D8; C3D9; C3D10; C3D11; C3D13; C4D6; C4D8; C4D13; C4D15; D2D13; E1D5; G3D6; S17C11; S18C4; S31C3	-
6	Structural tests for lightweight construction	B1D4; C2D9; S5C23; S14C2; S32C2; S32C3; Housing Provisions 9.3.1	-
7	Fire hazard properties (requirements)	C2D11; C2D14; S3C2; S14C2; S19C7; S32C6	-
8	Performance of external walls in fire	C2D12	-
9	Cavity barriers for fire-protected timber	C2D13; C4D16; S5C11; S5C20	-
10	Fire protected timber	S1C2	-
11	Smoke-proof walls in health-care and residential care buildings	C3D6; C3D15; C4D12; E2D11	-
12	Fire doors, smoke doors, fire windows and shutters	C4D5; G3D4; S11C2; S11C3	-
13	Penetration of walls, floors and ceilings by services	C4D15	-
14	Non-required stairways, ramps and escalators	C2D11; D2D17	-
15	Braille and tactile signs	D4D7; S27C10	-
16	Accessible water entry/exit for swimming pools	D4D11	-
17	Fire sprinkler systems	C1V3; C2D6; C2D13; C3D2; C3D4; C3D7; C3D8; C4D6; C4D7; C4D8; C4D9; C4D12; D2D4; D2D17; E1D4; E2D8; E2D9; E2D10; E2D11; E2D13; E2D14; E2D15; E2D16; E2D17; E2D19; E2D20; G3D1; G3D6; G6D6; I1D2; S5C10; S5C11; S5C14; S5C18; S5C19; S5C20; S5C21; S5C22; S5C24; S7C3; S7C4; S19C11; S20C3; S20C4; S20C5; S31C2	-

Spec no.	Title	References	
		Vols. One, Two and Housing Provisions	Vol. Three
18	Class 2 and 3 buildings not more than 25 m in effective height	E1D4; S17C2; S23C1; S23C3	-
19	Fire control centres	E1D14	-
20	Smoke detection and alarm systems	E2D3; E2D5; E2D7; E2D8; E2D9; E2D11; E2D13; E2D14; E2D15; E2D16; E2D17; E2D18; E2D19; E2D20; S5C19; S5C22; S17C8; S18C3; S21C7; S21C8; S22C3	-
21	Smoke exhaust systems	C3D13; E2D10; E2D14; E2D15; E2D16; E2D17; E2D18; E2D19; E2D20; S20C6; S20C8	-
22	Smoke-and-heat vents	E2D10; E2D14; E2D15; E2D16; E2D17; E2D18; E2D19; E2D20; S20C8	-
23	Residential fire safety systems	S18C3; S18C4	-
24	Lift installations	E3D2	-
25	Photoluminescent exit signs	E4D8	-
26	Waterproofing and water resistance requirements for building elements in wet areas	F1D6	-
27	Accessible adult change facilities	F4D12; S15C1	-
28	Sound insulation for building elements	F5D3; F5D4	-
29	Impact sound — Test of equivalence	F5D4; S28C2	-
30	Installation of boilers and pressure vessels	G2D2	-
31	Fire and smoke control in buildings containing atriums	G3D4; G3D8; S14C2	-
32	Construction of proscenium walls	C2D11; I1D3	-
33	Additional requirements	J1V1; J1V2; J1V3; J1V5	-
34	Modelling parameters	J1V3; S35C1	-
35	Modelling profiles	S34C3	-
36	Material properties	J4D3	-
37	Calculation of U-Value and solar admittance	J3D9; J3D13; J4D3; J4D6	-
38	Spandrel panel thermal performance	S37C3; S37C4	-
39	Sub-floor thermal performance	J4D3	-
40	Lighting and power control devices	J7D3; J7D4; J7D5; J7D6; J7D7	-
41	Cross-connection hazards	-	B5D2; B5D3; B5D4
42	House energy rating software	H6D2	-
43	Bushfire protection for certain Class 9 buildings	G5D4	-
44	Calculation of heating load limit, cooling load limit and thermal energy load limit	J1P2; H6P1	-
45	Modelling profiles for J1V5	J1V5	-

History of adoption of NCC Volume One

Adoption of NCC Volume One

The adoption of each edition of NCC Volume One (also referred to as BCA Volume One) is set out in Table 1.

Table 1: History of adoption of NCC Volume One

Edition	Commonwealth	ACT	NSW	NT	QLD	SA	TAS	VIC	WA
BCA 96	1 Jul 1997	1 Jul 1997	1 Jul 1997	7 Jan 1998	1 Jul 1997	1 Jan 1998	1 Jul 1997	1 Aug 1997	1 Jul 1997
BCA 96 Amdt 1	1 Jul 1997	1 Jul 1997	1 Jul 1997	7 Jan 1998	1 Jul 1997	1 Jan 1998	1 Jul 1997	1 Aug 1997	1 Jul 1997
BCA 96 Amdt 2	1 Jan 1998	1 Jan 1998	27 Feb 1998	7 Jan 1998	1 Jan 1998	1 Jan 1998	1 Jan 1998	1 Jan 1998	1 Jan 1998
BCA 96 Amdt 3	1 Jul 1998	1 Jul 1998	1 Jul 1998	1 Jul 1998	1 Jul 1998	13 Jul 1998	1 Jul 1998	1 Jul 1998	1 Jul 1998
BCA 96 Amdt 4	1 Jan 1999	17 May 1999	1 Feb 1999	1 Jan 1999	1 Jan 1999	1 Jan 1999	1 Jan 1999	1 Jan 1999	1 Jan 1999
BCA 96 Amdt 5	1 Jul 1999	3 Nov 1999	1 Aug 1999	1 Jul 1999	1 Jul 1999	1 Jul 1999	1 Jul 1999	1 Jul 1999	1 Jul 1999
BCA 96 Amdt 6	1 Jan 2000	10 Feb 2000	1 Jan 2000	1 Jan 2000	1 Jan 2000	17 Jan 2000	1 Jan 2000	1 Jan 2000	1 Jan 2000
BCA 96 Amdt 7	1 Jul 2000	10 Jul 2000	1 Jul 2000	1 Jul 2000	1 Jul 2000	1 Jul 2000	1 Jul 2000	1 Jul 2000	1 Jul 2000
BCA 96 Amdt 8	1 Jan 2001	11 Jan 2001	1 Jan 2001	1 Jan 2001	1 Jan 2001	1 Jan 2001	1 Jan 2001	1 Jan 2001	1 Jan 2001
BCA 96 Amdt 9	1 Jul 2001	12 Jul 2001	1 Jul 2001	1 Jul 2001	1 Jul 2001	2 Jul 2001	1 Jul 2001	1 Jul 2001	1 Jul 2001
BCA 96 Amdt 10	1 Jan 2002	1 Jan 2002	1 Jan 2002	1 Jan 2002	1 Jan 2002	1 Jan 2002	1 Jan 2002	1 Jan 2002	1 Jan 2002
BCA 96 Amdt 11	1 Jul 2002	1 Jul 2002	1 Jul 2002	1 Jul 2002	1 Jul 2002	1 Jul 2002	1 Jul 2002	1 Jul 2002	1 Jul 2002
BCA 96 Amdt 12	1 Jan 2003	1 Jan 2003	1 Jan 2003	1 Jan 2003	1 Jan 2003	1 Jan 2003	1 Jan 2003	1 Jan 2003	1 Jan 2003
BCA 96 Amdt 13	1 Jul 2003	1 Jul 2003	1 Jul 2003	1 Jul 2003	1 Jul 2003	1 Jul 2003	To Be advised	1 Jul 2003	1 Jul 2003
BCA 2004	1 May 2004	1 May 2004	1 May 2004	1 May 2004	1 May 2004	1 May 2004	1 May 2004	1 May 2004	1 May 2004
BCA 2005	1 May 2005	1 May 2005	1 May 2005	1 May 2005	1 May 2005	1 May 2005	1 May 2005	1 May 2005	1 May 2005
BCA 2006	1 May 2006	1 May 2006	01 May 2006	1 May 2006	1 May 2006	1 May 2006	1 May 2006	1 May 2006	1 May 2006
BCA 2007	1 May 2007	1 May 2007	1 May 2007	1 May 2007	1 May 2007	1 May 2007	1 May 2007	1 May 2007	1 May 2007
BCA 2008	1 May 2008	1 May 2008	1 May 2008	1 May 2008	1 May 2008	1 May 2008	1 May 2008	1 May 2008	1 May 2008
BCA 2009	1 May 2009	1 May 2009	1 May 2009	1 May 2009	1 May 2009	1 May 2009	1 May 2009	1 May 2009	1 May 2009

Edition	Commonwealth	ACT	NSW	NT	QLD	SA	TAS	VIC	WA
BCA 2010	1 May 2010	1 May 2010	1 May 2010	1 May 2010	1 May 2010	1 May 2010	1 May 2010	1 May 2010	1 May 2010
NCC 2011	1 May 2011	1 May 2011	1 May 2011	1 May 2011	1 May 2011	1 May 2011	1 May 2011	1 May 2011	1 May 2011
NCC 2012	1 May 2012	1 May 2012	1 May 2012	1 May 2012	1 May 2012	1 May 2012	1 May 2012	1 May 2012	1 May 2012
NCC 2013	1 May 2013	1 May 2013	1 May 2013	1 May 2013	1 May 2013	1 May 2013	1 May 2013	1 May 2013	1 May 2013
NCC 2014	1 May 2014	1 May 2014	1 May 2014	1 May 2014	1 May 2014	1 May 2014	1 May 2014	1 May 2014	1 May 2014
NCC 2015	1 May 2015	1 May 2015	1 May 2015	1 May 2015	1 May 2015	1 May 2015	1 May 2015	1 May 2015	1 May 2015
NCC 2016	1 May 2016	1 May 2016	1 May 2016	1 May 2016	1 May 2016	1 May 2016	1 May 2016	1 May 2016	1 May 2016
NCC 2016 Amendment 1	12 Mar 2018	12 Mar 2018	12 Mar 2018	12 Mar 2018	12 Mar 2018	12 Mar 2018	12 Mar 2018	12 Mar 2018	12 Mar 2018
NCC 2019	1 May 2019	1 June 2019	1 May 2019	1 May 2019	1 May 2019	1 May 2019	1 May 2019	1 May 2019	1 May 2019
NCC 2019 Amendment 1	1 Jul 2020	1 Jul 2020	1 Jul 2020	1 Jul 2020	1 Jul 2020	1 Jul 2020	1 Jul 2020	1 Jul 2020	1 Jul 2020
NCC 2022	1 May 2023	1 May 2023	1 May 2023	1 May 2023	1 May 2023	1 May 2023	1 May 2023	1 May 2023	1 May 2023

Table Notes

(1) 1 May 2006 (except that the date for mandatory compliance with Section J provisions for Class 5 to 9 buildings is 1 November 2006)

(2) 1 May 2006, except for Part I2 and Section J which were adopted on 1 August 2006.

(3) 1 May 2010 except for Section J, which was adopted on 1 September 2010, and the restriction on child resistant door sets in G1.1 and the additional bushfire requirements for 'excluded areas' prescribed in SA G5.2(d) and (e), which were adopted on 2 December 2010.

Adoption of BCA 96 Volume One

The 1996 edition of the BCA Volume One was adopted as set out in Table 1.

BCA 96 Amendment No. 1

Amendment No. 1 of the 1996 edition of the BCA Volume One was adopted as set out in Table 1

The purpose of Amendment No. 1 is to—

- correct minor typographical errors including spelling, punctuation and layout; and
- include reference to a Certificate of Conformity issued by the ABCB in A2.2; and
- change the reference to the Standards Mark Certificate to refer to JAS–ANZ in A2.2; and
- update references to Standards

Note: Only substantive typographical corrections are noted in the margin.

BCA 96 Amendment No. 2

Amendment No. 2 of the 1996 edition of the BCA Volume One was adopted as set out in Table 1

The purpose of Amendment No. 2 is to—

- correct minor typographical errors; and
- update references to Standards.

BCA 96 Amendment No. 3

Amendment No. 3 of the 1996 edition of the BCA Volume One was adopted as set out in Table 1

The purpose of Amendment No. 3 is to—

- incorporate the outcomes of the 1997 ABCB Variations Conference; and
- update references to Standards; and
- include minor technical changes.

BCA 96 Amendment No. 4

Amendment No. 4 of the 1996 edition of the BCA Volume One was adopted as set out in Table 1

The purpose of Amendment No. 4 is to—

- update references to Standards; and
- include minor technical changes.

Note: Only substantive typographical corrections are noted in the margin.

BCA 96 Amendment No. 5

Amendment No. 5 of the 1996 edition of the BCA Volume One was adopted as set out in Table 1

The purpose of Amendment No. 5 is to—

- update references to Standards; and
- include minor technical changes; and
- amend clauses to improve clarity and to reduce the possibility of differences in interpretation; and
- expand on the requirements for subfloor ventilation based on climatic conditions.

Note: Only substantive typographical corrections are noted in the margin.

BCA 96 Amendment No. 6

Amendment No. 6 of the 1996 edition of the BCA Volume One was adopted as set out in Table 1

The purpose of Amendment No. 6 is to—

- update references to Standards; and
- expand on the requirements for carparking for people with disabilities; and
- replace Sound Transmission Class (STC) with weighted sound reduction index (R_w) within Part F5; and
- include minor technical changes.

Note: Only substantive typographical corrections are noted in the margin.

BCA 96 Amendment No. 7

Amendment No. 7 of the 1996 edition of the BCA Volume One was adopted as set out in Table 1

The purpose of Amendment No. 7 is to—

- update references to Standards; and
- include requirements for non-required and private stairways; and
- include minor technical changes.

Note: Only substantive typographical corrections are noted in the margin.

BCA 96 Amendment No. 8

Amendment No. 8 of the 1996 edition of the BCA Volume One was adopted as set out in Table 1

The purpose of Amendment No. 8 is to—update references to Standards; and

- update references to Standards; and
- include minor technical changes; and
- achieve greater consistency between both Volumes of the BCA for stairway construction.

Note: Only substantive typographical corrections are noted in the margin.

BCA 96 Amendment No. 9

Amendment No. 9 of the 1996 edition of the BCA Volume One was adopted as set out in Table 1

The purpose of Amendment No. 9 is to—

- update references to Standards; and
- include minor technical changes; and
- clarify which glazed assemblies must comply with AS 2047 and which must comply with AS 1288.

Note: Only substantive typographical corrections are noted in the margin.

BCA 96 Amendment No. 10

Amendment No. 10 of the 1996 edition of the BCA Volume One was adopted as set out in Table 1

The purpose of Amendment No. 10 is to—

- update references to Standards; and
- clarify that windows must comply with AS 2047 for resistance to water penetration; and
- subject to certain conditions, allow a non-fire-isolated stairway to connect an additional storey; and
- update signage required for people with disabilities, including the need for signs to contain Braille and tactile information; and
- include minor technical changes.

Note: Only substantive typographical corrections are noted in the margin.

BCA 96 Amendment No. 11

Amendment No. 11 of the 1996 edition of the BCA Volume One was adopted as set out in Table 1

The purpose of Amendment No. 11 is to—

- update references to Standards; and
- transfer public policy matters, with respect to structural adequacy, from the AS 1170 series to the BCA; and
- introduce Class 7a, 7b and 9c classifications; and
- update the provisions for residential buildings used for the accommodation of the aged to align with the Commonwealth Aged Care Act, 1997; and
- include minor technical changes.

Note: Only substantive typographical corrections are noted in the margin.

BCA 96 Amendment No. 12

Amendment No. 12 of the 1996 edition of the BCA Volume One was adopted as set out in Table 1

The purpose of Amendment No. 12 is to—

- update references to Standards; and
- apply the swimming pool safety provisions to swimming pools associated with Class 4 parts as well as Class 2 and 3

buildings; and

- allow the use of either the 1989 editions or the 2002 editions of the 1170 series of standards; and
- include minor technical changes.

Note: Only substantive typographical corrections are noted in the margin.

BCA 96 Amendment No. 13

Amendment No. 13 of the 1996 edition of the BCA Volume One was adopted as set out in Table 1

The purpose of Amendment No. 13 is to—

- update references to Standards; and
- reform the provisions for fire hazard properties of materials; and
- revise a requirement for the use of non-combustible materials; and
- include additional requirements for the protection of electrical switchboards which sustain electricity supply to emergency equipment; and
- include minor changes to the requirements for aged care buildings; and
- include minor technical changes.

Note: Only substantive typographical corrections are noted in the margin.

Adoption of BCA 2004 Volume One

The 2004 edition of the BCA Volume One was adopted as set out in Table 1.

The purpose of BCA 2004 Volume One is to—

- update references to Standards; and
- update references from BCA 96 to BCA 2004; and
- include a Performance Requirement considering human impact with glazing; and
- reform the provisions for sound insulation; and
- reform the maintenance provisions; and
- include minor technical changes.

Adoption of BCA 2005 Volume One

The 2005 edition of the BCA Volume One was adopted as set out in Table 1.

The purpose of BCA 2005 Volume One is to—

- update references to Standards; and
- clarify when fire sprinklers are required to be installed in buildings; and
- update the provisions for waterproofing of wet areas; and
- include energy efficiency measures for Class 2 and 3 buildings and Class 4 parts; and
- more closely align the requirements for lifts with those of Occupational Health and Safety legislation; and
- include minor technical changes.

Adoption of BCA 2006 Volume One

The 2006 edition of the BCA Volume One was adopted as set out in Table 1.

The purpose of BCA 2006 Volume One is to—

- update schedule of referenced documents; and
- include a national testing regime for cladding in cyclonic areas; and
- withdraw of AS 1530.3 tests on floor materials and floor coverings and wall and ceiling linings; and

- include energy efficiency measures for Class 5 to 9 buildings; and
- include minor technical changes.

Adoption of BCA 2007 Volume One

The 2007 edition of the BCA Volume One was adopted as set out in Table 1.

The purpose of BCA 2007 Volume One is to—

- update references to other documents; and
- update energy efficiency provisions including providing additional information; and
- include minor technical changes.

Adoption of BCA 2008 Volume One

The 2008 edition of the BCA Volume One was adopted as set out in Table 1.

The purpose of BCA 2008 Volume One is to—

- update references to other documents; and
- due to changes in the types of detector now available, rather than only allowing the use of a heat detectors when smoke detector would be unsuitable in the atmosphere, to allow the use of any type of detector deemed suitable by AS 1670.1; and
- clarify the intent of the BCA when a service penetrates a building element required to have an FRL; and
- amend the requirements for door handle heights to be consistent with AS 1428.1; and
- align some BCA terms with current industry terminology; and
- include lists of other Commonwealth, State and Territory legislation affecting buildings; and
- include suitable provisions for swimming pool water recirculation systems; and
- include minor technical changes.

Adoption of BCA 2009 Volume One

The 2009 edition of the BCA Volume One was adopted as set out in Table 1.

The purpose of BCA 2009 Volume One is to—

- update references to other documents; and
- after expiry of the agreed transition period, except for the 1993 edition of AS 1170.4, delete all references to the older loading standards contained in the AS 1170 series and consequently, all provisions referring to them; and
- clarify the application of the vertical separation provisions; and
- clarify the intent of separation of equipment; and
- simplify the wire balustrade provisions, including the addition of a Verification Method; and
- clarify the provisions for the construction of sanitary compartments to enable an unconscious occupant to be removed; and
- clarify the height of rooms in an attic and with a sloping ceiling; and
- further update the energy efficiency provisions; and
- include minor technical changes.

Adoption of BCA 2010 Volume One

The 2010 edition of the BCA Volume One was adopted as set out in Table 1.

The purpose of BCA 2010 Volume One is to—

- update references to other documents; and
- delete reference to the 1993 edition of AS 1170.4 and consequently all provisions referring to it; and

- increase the stringency of the energy efficiency provisions and, as part of reducing greenhouse gas emissions, introduce provisions for the greenhouse gas intensity of the energy source for services such as water and space heaters; and
- update Part G5, as a consequence of referencing the 2009 edition of AS 3959 construction in bushfire-prone areas, to include provisions which apply to a Class 10a building or deck associated with a Class 2 or 3 building located in a designated bushfire prone area; and
- include minor technical changes.

Adoption of NCC 2011 Volume One

The 2011 edition of the NCC Volume One was adopted as set out in Table 1.

The purpose of NCC 2011 Volume One is to—

- update references to other documents; and
- align the NCC with the Access Code in the Disability (Access to Premises — Buildings) Standards; and
- restructure the fire hazard property provisions; and
- include minor technical changes.

Adoption of NCC 2012 Volume One

The 2012 edition of the NCC Volume One was adopted as set out in Table 1.

The purpose of NCC 2012 Volume One is to—

- update references to other documents; and
- include revised provisions aimed at reducing slips, trips and falls in buildings; and
- include a Verification Method for emergency lighting; and
- align the NCC with changes to the National Quality Standard for early childhood education and care; and
- include exemptions for Class 8 electricity network substations; and
- include minor technical changes.

Adoption of NCC 2013 Volume One

The 2013 edition of the NCC Volume One was adopted as set out in Table 1.

The purpose of NCC 2013 Volume One is to—

- update references to other documents; and
- include new provisions for openable windows to reduce falls in buildings; and
- include a Performance Requirement and reference a Standard for construction in flood hazard areas; and
- consolidate the building related components of the AS 1735 lift series into the BCA; and
- enhance the egress provisions for people with disability; and
- include minor technical changes.

Adoption of NCC 2014 Volume One

The 2014 edition of the NCC Volume One was adopted as set out in Table 1.

The purpose of NCC 2014 Volume One is to—

- update references to other documents; and
- quantify slip resistance on ramps, stairways and landings; and
- include provisions for photoluminescent exit signs; and
- expand the fire-resistance concession for timber-framed construction to include Class 3 buildings; and
- remove the requirement for fire hose reels in a Class 2 or Class 3 building or a Class 4 part of a building; and

- include minor technical changes.

Adoption of NCC 2015 Volume One

The 2015 edition of the NCC Volume One was adopted as set out in Table 1.

The purpose of NCC 2015 Volume One is to—

- update references to other documents; and
- include a Verification Method for structural reliability; and
- improve the usability of the barrier provisions; and
- expand the requirements for sprinkler protection to aged care buildings; and
- include a Verification Method for weatherproofing of external walls; and
- improve the usability of energy efficiency provisions for air-conditioning and ventilation systems.

Adoption of NCC 2016 Volume One

The 2016 edition of NCC Volume One was adopted as set out in Table 1.

The purpose of NCC 2016 Volume One is to—

- update references to other documents; and
- amend the “Introduction” and “General Requirements” as part of the initiative to increase the use of Performance Solutions; and
- include new Verification Methods for structural robustness and indoor air quality; and
- include provisions for fire-protected timber; and
- include requirements for farm-type buildings; and
- include minor technical changes.

NCC 2016 Volume One Amendment No. 1

Amendment No. 1 to the 2016 edition of NCC Volume One was adopted as set out in Table 1.

The purpose of Amendment No. 1 is to—

- introduce a new Verification method, CV3, for limiting fire spread via external wall assemblies; and
- include reference to the revised edition of AS 2118.1; and
- clarify provisions relating to the use of external wall claddings and attachments; and
- revise the evidence of suitability provisions.

Adoption of NCC 2019 Volume One

The 2019 edition of NCC Volume One was adopted as set out in Table 1.

The purpose of NCC 2019 Volume One is to—

- include the Governing Requirements, that result from revision of Section A to improve readability and are common to all NCC volumes; and
- introduce the use of schedules that are common to all NCC volumes; and
- include new Verification Methods, including the Fire Safety Verification Method; and
- clarify provisions, including provisions relating to measurement of distance between required alternative exits; and
- expand the requirements for sprinkler protection to residential buildings; and
- introduce requirements for accessible adult change facilities; and
- introduce requirements for management of water vapour and condensation; and
- introduce requirements for occupiable outdoor areas; and

- increase stringency of energy efficiency requirements; and
- update references to other documents; and
- include minor technical changes.

NCC 2019 Amendment No. 1

Amendment No. 1 to the 2019 edition of NCC Volume One was adopted as set out in Table 1.

The purpose of Amendment No. 1 is to—

- require that a process be followed to improve the quality of and documentation for Performance Solutions; and
- include a new provision regarding egress from early childhood centres; and
- require labelling of Aluminium Composite Panels; and
- clarify the concession that permits timber framing for low-rise Class 2 and 3 buildings.

NCC 2022

The 2022 edition of NCC Volume One was adopted as set out in Table 1.

The purpose of NCC Volume One 2022 is to—

- include quantified Performance Requirements; and
- clarify and improve provisions relating to fire performance of building elements, including external walls; and
- include provisions to improve fire safety for early childhood centres and primary schools; and
- include expanded weatherproofing and waterproofing provisions; and
- include bushfire protection requirements for certain Class 9 buildings; and
- incorporate amended energy efficiency provisions; and
- update references to other documents; and
- include other minor technical changes.

List of amendments - NCC 2022 Volume One

This list has been prepared by the Australian Building Codes Board to assist National Construction Code (NCC) users in identifying changes incorporated in the 2022 edition of NCC Volume One.

The notes provide a description of major changes made from the previous edition of Volume One. If additional information is required to assist in understanding, interpreting or applying the provisions of the 2022 edition of Volume One, reference should be made to the Guide to Volume One.

While the Australian Building Codes Board has attempted to include all major changes made from the previous edition of Volume One, the Board does not give any warranty nor accept any liability in relation to the contents of this list of amendments.

Table 1: List of amendments - NCC 2022 Volume One

Reference	Changes and Commentary
General	
Throughout	An “Introduction to this Part” has been added to introduce the intent and purpose of every Part of the NCC.
Throughout	The Objectives and Functional Statements have been relocated from the Guide to Volume One into NCC Volume One.
Throughout	A number of provisions have been amended, restructured, deleted and relocated as part of the initiative to provide a consistent NCC structure and improve NCC usability.
Section A—Governing requirements	
A1G1	A new clause added to specify scope of NCC Volume One.
A1G2	A new clause added to specify scope of NCC Volume Two.
A1G3	A new clause added to specify scope of NCC Volume Three.
A2G2(4)(b)	Amended to remove unnecessary duplication.
A5G3	A Note has been included to outline transitional arrangements regarding new numbering system and documentary evidence.
A5G4	A new clause added to limit lead content in copper alloy plumbing products in contact with drinking water.
A5G9	A new clause added to require a NatHERS certificate be issued for the house energy rating software output where house energy rating software is required.
A6G1	The limitation statement has been amended to include a Class 9b early childhood centre.
Specification 1	Schedule 5 in NCC 2019 Amendment 1 has been relocated into new Specification 1 and 2.
Specification 2	Schedule 5 in NCC 2019 Amendment 1 has been relocated into new Specification 1 and 2.
Specification 3	Schedule 6 in NCC 2019 Amendment 1 has been relocated into new Specification 3.
Section B—Structure	

Reference	Changes and Commentary
B1P1(2)(a)	A new requirement for a Class 7b buildings to have the ability to support the addition of solar photovoltaic panels. An exemption is also provided to certain Class 7b buildings.
B1D3(a)(iv)	A new requirement for a Class 7b buildings to have the ability to support the addition of solar photovoltaic panels. An exemption is also provided to certain Class 7b buildings.
B1D3(c)	Amended to clarify all parts of AS 1170.4 are applicable.
Section C—Fire resistance	
C1V4	Amended as a consequence of restructuring Schedule 7 of NCC 2019 Volume One Amendment 1 into the referenced document, ABCB Fire Safety Verification Method standard.
C2D10(4)	Amended to provide additional concessions to C2D10(1) and (2).
C2D10(5)	A new sub-clause added to specify non-combustible materials.
C2D10(6)	Amended to provide cross-reference for fixing requirements of externally located bonded laminated materials.
C2D14	Amended for clarity and to provide additional ancillary elements permitted on an external wall required to be non-combustible.
C2D15	A new clause added to specify fixing requirements for externally located bonded laminated cladding panels.
C3D3	Amended to make reference to new defined term ‘Volume’.
C3D4	Amended to make reference to new defined term ‘Volume’.
C3D6	A new sub-clause (2) has been inserted to provide compartmentation and separation requirements to Class 9b early childhood centres. As a consequence, the heading has also been amended. An exemption statement has also been included to provide exemption to certain Class 9b early childhood centres.
C4D10	Amended to provide concession for test drain pipes used for fire services.
C4D16	Amended to permit use of reports where the tested system differs from the subject system in accordance with AS 4072.1. Also, a new sub-clause has been inserted to clarify that tests must be reported in accordance with Specifications 1 and 2.
S5C20(1)	Sub-clause (c) has been inserted to permit the use of timber framing for roof trusses and floor frames.
S5C23(1)	Sub-clause (c) has been inserted to permit the use of timber framing for roof trusses and floor frames.
Section D—Access and egress	
D2D3	Amended to provide concession to parts of a storey of certain buildings to require 1 exit in lieu of not less than 2 provided there is direct egress to a road or open space and satisfies D2D5 provision for 1 exit.

Reference	Changes and Commentary
D2D3(4)(iv)	Amended to require each part of storey or fire compartment used as a Class 9b early childhood centre be provided with not less than 2 exits.
D2D4(2)	Amended to require stairways or ramps serving Class 9b early childhood centres as a required exit to be fire-isolated. An exemption has been included for certain Class 9b early childhood centres.
D2D8	Amended to provide exemption to ladders that are in accordance with D2D21, D3D23 or I3D3.
D2D16(6)	Amended and includes a new sub-clause to specify the clear area to horizontal exits to Class 9b early childhood centres must accommodate all occupants.
D2D16(8)	A new sub-clause has been inserted to require not less than 2 horizontal exits to fire compartments required by C3D6(2).
D2D23	Amended to include new provisions for primary schools. References to early childhood centres have been deleted as a consequence to new and amended Deemed-to-Satisfy Provisions and limitation statement located in A6G1, C3D6, D2D3, D2D4, D2D16, D3D19, D3D22, D3D27, E1D11, Specification 17 and E2D20.
D3D16(b)	Amended to provide exemption only to resident use areas in a Class 9c building.
D3D19(4)	Amended to specify requirements of D3D19(2) and (3) cannot be applied to fire-isolated stairways or ramps serving Class 9b early childhood centres.
D3D19(6) and (7)	New sub-clauses have been inserted to provide a maximum opening between barrier and vertical face of a landing, balcony, deck, stairway or the like.
D3D22(1)(c)	Amended to include a new handrail requirement for Class 9b early childhood centres.
D3D27	Amended and includes provision for doors of a fire-isolated exit to not be locked from the inside in a Class 9b early childhood centre.
Section E—Services and equipment	
E1D2	Concessions, included in previous editions, regarding protection of booster assemblies have been removed on account of these now being included in AS 2419.1.
E1D8	Amended to make reference to new defined term 'Volume'.
E1D11	Amended to require sprinkler protection for buildings containing a Class 9b early childhood centre. An exemption has been included for certain Class 9b early childhood centres.
E1D13	Amended to make reference to new defined term 'Volume'.
E2D10	Amended to make reference to new defined term 'Volume'.
E2D20	A new sub-clause has been inserted to require automatic smoke detection and alarm system to a building containing Class 9b early childhood centre. An exemption has been included for certain Class 9b early childhood centres.

Reference	Changes and Commentary
S17C2(c)	Amended to specify that a Class 2 or 3 building with a Class 9b early childhood centre cannot adopt a sprinkler system in accordance with Specification 18.
S17C14	A new clause has been inserted to require quick response sprinklers to Class 9b early childhood centres required to have an automatic fire sprinkler system. An exemption has been provided to certain Class 9b early childhood centres.
Section F—Health and amenity	
Part F1	Part F1 has been re-named as a consequence of restructuring, includes new external waterproofing Deemed-to-Satisfy Provisions, and group provisions relating to rainwater management and rising damp.
F1P2	Amended to reflect contemporary terminology of annual exceedance probability in lieu of average recurrence interval.
F1P3	Amended to reflect contemporary terminology of annual exceedance probability in lieu of average recurrence interval.
F1D2	A new clause added to specify application of Part F1.
F1D3	Amended to clarify design and construction of stormwater drainage.
F1D4	A new clause has been inserted to specify requirements for exposed joints incorporated in a roof, balcony, podium or similar horizontal part of building.
F1D5	Amended to clarify locations at which external waterproofing membranes are required.
Part F2	A new Part has been inserted as a consequence of restructuring Part F1 and contains group provisions for wet areas and overflow protection previously contained in NCC 2019 Amdt 1 Part F1. The remaining Parts of Section F have been renumbered accordingly.
F2O1	A new Objective has been included for wet areas.
F2F1	A new Functional Statement has been included for wet areas.
F2D4	Amended to include new requirement for a floor to fall to waste where a floor waste is installed.
Part F3	A new Part has been inserted containing new and relocated Deemed-to-Satisfy Provisions relating to roof and external wall weatherproofing.
F3O1	A new Objective has been included for roof and wall cladding
F3F1	A new Functional Statement has been included for roof and wall cladding
F3D2	A new sub-clause has been added to include external waterproofing membrane complying with F1D5. Cellulose cement corrugated sheeting has been removed from the clause.
F3D5	A new provision has been included to provide options for masonry, autoclaved aerated concrete and metal wall cladding complying with certain NCC referenced documents for satisfying external wall weatherproofing requirements.

Reference	Changes and Commentary
F4D5(c)	Amended to clarify ambulant sanitary compartment must be provided for each sex, and for male ambulant sanitary compartment to be separate from female ambulant sanitary compartment.
F7P1	Amended and now contains quantified level of performance for sound transmission through floors.
F7P2	Amended and now contains quantified level of performance for sound transmission through walls.
FP5.3	This Performance Requirement in NCC 2019 Amdt 1 has been deleted as a consequence of amendments to F7P1 and F7P2.
F7P3	Amended and now contains quantified level of performance for sound transmission through floors in a residential care building.
F7P4	Amended and now contains quantified level of performance for sound transmission through walls in a residential care building.
FP5.6	This Performance Requirement in NCC 2019 Amdt 1 has been deleted as a consequence of amendments to F7P3 and F7P4.
F8V1	Amended to include new references to sections of the standard AIRAH DA07 for input assumptions, and new failure criteria included based on a mould index of 3.
F8D3	Amended to include vapour permeance requirements for several materials in climate zones 4 to 8.
F8D4	Amended to include additional exhaust requirements, including ducting of exhausts to outdoor air, exhaust run-on timers in some rooms and provision of make-up air to some rooms.
F8D5	Amended to require a ventilated roof space in climate zones 6, 7 and 8, with exceptions for concrete roofs, roofs made from structural insulated panels and roofs subject to Bushfire Attack Level FZ.
Specification 26	A new specification has been inserted and contains the requirements of Table F1.7 of NCC 2019 Volume One Amendment 1.
S26C3	Amended to require walls in shower areas to be waterproof to not less than 1800 mm above the floor substrate.
S26C4 and S26C5	Sub-clause (1) has been amended to include fibre-cement sheet flooring.
S26C6	A new sub-clause (3) has been inserted to specify wet area requirements where a hand-held bidet spray is installed in a WC. Sub-clause (2) has been amended as a consequence of sub-clause (3).
S28C7	Amended and includes new forms of timber and steel wall construction.
S28C10	Amended and includes new form of timber floor construction.
Section G—Ancillary provisions	
G1D4	Amended to require barriers to outdoor play spaces located more than 2 m above the surface beneath to be 1.8 m high and non-climbable.

Reference	Changes and Commentary
G2D3	Consequential amendments as a result of changes to the Part 12.4 of the ABCB Housing Provisions as part of the Acceptable Construction Practice review project.
G5O1(c)	Amended to include new sub-clause to reflect protection of building occupants who may be unable to readily evacuate prior to a bushfire.
G5F1	Amended to include protection of building occupants who may be unable to readily evacuate prior to a bushfire.
G5P1	Amended and now contains quantified level of performance for bushfire resistance.
G5P2	New Performance Requirement for Class 9 buildings has been added.
G5V1	A limitation box has been inserted to specify that G5V1 does not apply to a Class 9 building.
G5D1	Amended on account of the introduction of G5P2.
G5D2	Amended to include Class 9 buildings located in an area subject to BAL not exceeding 12.5.
G5D3	Title amended to include reference to residential buildings.
G5D4	A new provision has been added for the protection of certain Class 9 buildings.
Part G7	A new Part has been inserted containing the Livable housing design requirements. This includes a new Objective, Functional Statement, Performance Requirement and Deemed-to-Satisfy Provisions.
Specification 43	A new Specification has been inserted as a consequence of new bushfire protection provisions for certain Class 9 buildings.
Section I—Special use buildings	
Section I	Section H of NCC 2019 Volume One Amendment 1 has been amended to Section I as a result of structural changes to NCC Volume Two.
Section J—Energy efficiency	
J1O1	Amended to expand the energy efficiency Objectives of Section J.
J1F1	Amended to expand the energy efficiency functional requirements of Section J.
J1P1	Amended to clarify requirements for a Class 2 building or a Class 4 part of a building.
J1P2	A new Performance Requirement for the thermal performance of Class 2 sole-occupancy units.
J1P3	A new Performance Requirement for the energy usage of Class 2 sole-occupancy units.
J1P4	A new Performance Requirement for renewable energy and electric vehicle charging equipment.
J1V1(2)	Expands the NABERS pathway to Class 2 common areas.
J1V1(3)	Expands the NABERS pathway to Class 3 buildings.
J1V1(4)	Expands the NABERS pathway to Class 6 buildings.

Reference	Changes and Commentary
J1V2(1)	Aligns the Green Star pathway with the most recent Green Building Council of Australia modelling requirements.
J1V2(2)	Amended to remove reference to Specification 34 as a required calculation method.
J1V4	Expands the existing building sealing verification method by setting additional ventilation requirements for well-sealed buildings.
J1V5	A new verification method for a sole-occupancy unit of Class 2 building.
Part J2	Expanded section on the application of Section J.
Part J3	New Deemed-to-Satisfy Provisions J3D1 to J3D15, for energy efficiency in a sole-occupancy unit of Class 2 building or a Class 4 part of a building.
J4D6	Amended to clarify how the requirements apply to internal envelope walls.
J4D7	Amended to set a deemed R-Value for concrete slab-on-ground construction in most circumstances.
J9D3	Amended to provide concession to individual sole-occupancy units with a floor area of 500 m^2 or less.
J9D4	Provisions to provide ease of retrofit for electric vehicle charging equipment.
J9D5	Provisions to provide ease of retrofit for solar photovoltaic and battery storage equipment.
S34C2(d)(ii)	Amended to clarify infiltration rate applies throughout all zones.
S34C3(4)(d)	Amended to clarify building form inclusions for ground floor and basements.
S34C3(6)(f)	Amended to clarify scope of air-conditioning configuration and zoning requirements.
Table S34C3	Amends table to use the most up to date greenhouse gas emissions factors.
Table S35C2k	Amends the artificial lighting schedule from weekly to daily.
Specification 36	Amended to align the tables of R-Values for material, surface air film and airspace with current calculation methodologies.
Table S39C2b	Amended to include a table note on wall thickness.
Specification 44	A new specification referenced by J1P2 has been inserted that describes the calculation of heating, cooling and thermal load limits.
Specification 45	A new specification has been inserted to provide modelling profiles for J1V5.
Schedule 1—Definitions	
Schedule 1	Schedule 1 has been amended as part of the initiative to improve readability of the NCC. Schedule 1 – Definitions includes Abbreviations, Symbols and Glossary. States & Territory Appendices (formerly located in Schedule 1) have been incorporated into Schedule 3 to Schedule 11.
Abbreviations	Acrylic conformal coating (ACC) has been added.
Abbreviations	Acrylic latex (ACL) has been added.

Reference	Changes and Commentary
Abbreviations	Australian Institute of Refrigeration, Air conditioning and Heating (AIRAH) has been added.
Abbreviations	American National Standards Institute (ANSI) has been added.
Abbreviations	American Society of Heating, Refrigerating and Air Conditioning Engineers (ASHRAE) has been added.
Abbreviations	National Standard of Canada (CAN) has been added.
Abbreviations	Chartered Institution of Building Services Engineer (CIBSE) has been added.
Abbreviations	Flame zone (FZ) has been added.
Abbreviations	Greenhouse and Energy Minimum Standards (GEMS) has been added.
Abbreviations	Hot dip galvanising (HDG) has been added.
Abbreviations	Inorganic zinc silicate (IZS) has been added.
Abbreviations	NATA has been amended to include reference to Australia.
Abbreviations	National Sanitation Foundation (NSF) has been added.
Abbreviations	Polyurethane (PUR) has been added.
Symbols	µg/N.s has been added.
Symbols	f'c has been added.
Symbols	f'y has been added.
Symbols	G has been added.
Symbols	N/m has been added.
Symbols	Q has been added.
Symbols	ULS has been added.
Glossary	A defined term, 'Above ground rainwater tank', has been added.
Glossary	A defined term, 'Annual exceedance probability', has been added as a consequence of amendments to Part 7.4 Gutters and downpipes of the ABCB Housing Provisions.
Glossary	A defined term, 'Assumed cooling thermostat set point' has been added as a consequence of quantification in J1P2 and H6P1.
Glossary	A defined term, 'Average recurrence interval', has been deleted as a consequence of amendments to Part 7.4 Gutters and downpipes of the ABCB Housing Provisions.
Glossary	A defined term, 'Bond breaker', has been added as a consequence of amendments to Part 10.2 of the ABCB Housing Provisions.
Glossary	A defined term, 'Building complexity criteria', has been added.
Glossary	A defined term, 'Buried rainwater tank', has been added as a consequence of amendments to Specification 41 of Volume Three.
Glossary	A defined term, 'Cooling degree hours' has been added as a consequence of quantification in J1P2 and H6P1.
Glossary	A defined term, 'Daily outdoor temperature range' has been added as a consequence of quantification in J1P2 and H6P1.

Reference	Changes and Commentary
Glossary	A defined term, 'Dehumidification gram hours', has been added as a consequence of quantification in J1P2 and H6P1.
Glossary	A defined term, 'Design bushfire', has been added as a consequence of amendments to Part G5.
Glossary	The defined term, 'Domestic services', has been amended to include on-site renewable energy equipment as a result of quantification in J1P3 and H6P2.
Glossary	A defined term, 'Drainage flange', has been added as a consequence of amendments to Part 10.2 of the ABCB Housing Provisions.
Glossary	A defined term, 'Drainage riser', has been added as a consequence of amendments to Part 10.2 of the ABCB Housing Provisions.
Glossary	A defined term, 'Efficacy', has been added as a consequence of including quantified Performance Requirement H3P2 for automatic warning for occupants.
Glossary	A defined term, 'Energy value', has been added as a consequence of quantification in J1P3 and H6P2.
Glossary	A defined term, 'Engaged pier', has been added as a consequence of amendments to Section 5 of the ABCB Housing Provisions.
Glossary	A defined term, 'Fire actions', has been added as a consequence of amendments to Part G5.
Glossary	The defined term, 'Flashing', has been amended to clarify perimeter and vertical flashings as a consequence of amendments to Part 10.2 of the ABCB Housing Provisions.
Glossary	The defined term, 'Floor area', for Volume One, has been amended on account of new defined term 'Volume'.
Glossary	A defined term, 'Floor waste', has been added as a consequence of amendments to Part 10.2 of the ABCB Housing Provisions.
Glossary	The defined term, 'Glazing', has been amended as a consequence of the updates to the energy efficiency Deemed-to-Satisfy provisions for Class 2 buildings.
Glossary	A defined term, 'Heating degree hours', has been added as a consequence of quantification in J1P2 and H6P1.
Glossary	A defined term, 'Hob', has been added as a consequence of amendments to Part 10.2 of the ABCB Housing Provisions.
Glossary	A defined term 'Irrigation system', has been added as a consequence of amendments to S41C2 in Volume Three.
Glossary	A defined term, 'Lateral support', has been added as a consequence of amendments to Part 5.3 of the ABCB Housing Provisions.
Glossary	A defined term, 'Main water heater' has been added as a consequence of including new whole-of-home energy efficiency requirements.
Glossary	A defined term, 'Main space conditioning' has been added as a consequence of including new whole-of-home energy efficiency requirements.

Reference	Changes and Commentary
Glossary	A defined term, 'Maximum retained water level', has been added as a consequence of amendments to Part 10.2 of the ABCB Housing Provisions.
Glossary	A defined term, 'Membrane', has been added as a consequence of amendments to Part 10.2 of the ABCB Housing Provisions.
Glossary	The defined term, 'NABERS Energy for Offices' has been amended to be 'NABERS Energy' to reflect its use for multiple building classifications.
Glossary	The defined term, 'Performance-based design brief' has been amended for clarity.
Glossary	The defined term, 'Point of connection', has been amended for clarity.
Glossary	A defined term, 'Preformed shower base', has been added as a consequence of amendments to Part 10.2 of the ABCB Housing Provisions.
Glossary	A defined term, 'Primary insulation layer', has been added as a consequence of amendments to condensation management provisions.
Glossary	The defined term, 'Rainwater harvesting system', has been amended to 'Rainwater service' and 'Rainwater storage' as a consequence of amendments to Part B6 of Volume Three.
Glossary	The defined term, 'Reference building', has been amended to remove reference to Thermal comfort levels and as a consequence of the introduction of J1V5.
Glossary	A defined term, 'Reliability', has been added as a consequence of including quantified Performance Requirements for automatic warning for occupants.
Glossary	A defined term, 'Screed', has been added as a consequence of amendments to Part 10.2 of the ABCB Housing Provisions.
Glossary	The defined term, 'Shower area', has been amended to clarify enclosed and unenclosed shower areas as a consequence of amendments to Part 10.2 of the ABCB Housing Provisions.
Glossary	A defined term, 'Shower screen', has been added as a consequence of amendments to Part 10.2 of the ABCB Housing Provisions.
Glossary	A defined term, 'Thermal energy load', has been added as a consequence of quantification in J1P2 and H6P1.
Glossary	The defined term 'Total R-Value' in the ABCB Housing Provisions has been amended to align with Volume One.
Glossary	The defined term, 'Total System U-Value', in the ABCB Housing Provisions has been amended to align with Volume One.
Glossary	A defined term 'Unprotected water service', has been added as a consequence of introducing new provision for unprotected water service – B5D5 of Volume Three.
Glossary	A defined term, 'Vapour permeance', has been added as a consequence of amendments to the condensation management provisions.

Reference	Changes and Commentary
Glossary	A defined term, 'Volume', has been added to clarify the volume space with respect to a building, fire compartment and atrium.
Glossary	A defined term, 'Waterproofing system', has been added as a consequence of amendments to Part 10.2 of the ABCB Housing Provisions.
Glossary	A defined term, 'Water stop', has been added as a consequence of amendments to Part 10.2 of the ABCB Housing Provisions.
Glossary	A defined term, 'Weighted average', has been added as a consequence of amendments to A5G4.
Glossary	A defined term, 'Wetted surface area', has been added to provide clarification to the defined term 'Weighted average'.
Schedule 2—Referenced documents	
AS/NZS 1170.2	The 2021 edition of AS/NZS 1170 Part 2 'Structural design actions — Wind actions' has been referenced.
AS 1288	The 2021 edition of AS 1288 'Glass in buildings — Selection and installation' has been referenced.
AS 1397	The 2021 edition of AS 1397 'Continuous hot-dip metallic coated steel sheet and strip — Coatings of zinc and zinc alloyed with aluminium and magnesium' has been referenced. A note has been included to outline transitional arrangements.
AS 1530 Parts 1 to 4	The notes to AS 1530 Parts 1 to 4 have been deleted.
AS 1530.8.1	The 2018 edition of AS 1530 Part 8.1 'Methods for fire tests on building materials, components and structures — Tests on elements of construction for buildings exposed to simulated bushfire attack — Radiant heat and small flaming sources' has been referenced.
AS/NZS 1546.1	The 2008 edition of AS/NZS 1546 Part 1 'On-site domestic wastewater treatment units — Septic tanks' has been referenced.
AS/NZS 1546.2	The 2008 edition of AS/NZS 1546 Part 2 'On-site domestic wastewater treatment units — Waterless composting toilets' has been referenced.
AS 1546.3	Amdt 1 of the 2017 edition of AS 1546 Part 3 'On-site domestic wastewater treatment units — Secondary treatment systems (incorporating amendment 1)' has been referenced.
AS 1546.4	The 2016 edition of AS 1546 Part 4 'On-site domestic wastewater treatment units — Domestic greywater treatment systems' has been referenced.
AS/NZS 1547	The 2012 edition of AS/NZS 1547 'On-site domestic wastewater management' has been referenced.
AS/NZS 1562.2	The 1999 edition of AS/NZS 1562 Part 2 'Design and installation of sheet roof and wall cladding — Corrugated fibre-reinforced cement' has been deleted.
AS 1562.3	The 2006 edition of AS 1562 Part 3 'Design and installation of sheet roof and wall cladding — Plastic' has been referenced.

Reference	Changes and Commentary
AS 1670.1	Amdt 1 of the 2018 edition AS 1670 Part 1 'Fire detection, warning, control and intercom systems — System design, installation and commissioning — Fire (incorporating amendment 1)' has been referenced. Notes to AS 1670 have been amended to outline transitional arrangements.
AS 1670.3	Amdt 1 of the 2018 edition AS 1670 Part 3 'Fire detection, warning, control and intercom systems — System design, installation and commissioning — Fire alarm monitoring (incorporating amendment 1)' has been referenced. Notes to AS 1670 have been amended to outline transitional arrangements.
AS 1670.4	Amdt 1 of the 2018 edition AS 1670 Part 4 'Fire detection, warning, control and intercom systems — System design, installation and commissioning — Emergency warning and intercom systems (incorporating amendment 1)' has been referenced. Notes to AS 1670 have been amended to outline transitional arrangements.
AS 1684.2	The 2021 edition of AS 1684 Part 2 'Residential timber-framed construction — Non-cyclonic areas' has been referenced.
AS 1684.3	The 2021 edition of AS 1684 Part 3 'Residential timber-framed construction —Cyclonic areas' has been referenced.
AS/NZS 1720.4	The 2019 edition of AS/NZS 1720 Part 4 'Timber structures — Fire resistance of timber elements' has been referenced.
AS 1720.5	Amdt 1 of the 2015 edition of AS 1720 Part 5 'Timber structures —Nailplated timber roof trusses (incorporating amendment 1)' has been referenced.
AS/NZS 1859.4	The note to AS/NZS 1859.4 has been deleted.
AS 2118.1	Amdt 2 of the 2017 edition of AS 2118 Part 1 'Automatic fire sprinkler systems — General systems (incorporating amendments 1 and 2)' has been referenced.
AS 2118.4	The 2012 edition of AS 2118 Part 4 'Automatic fire sprinkler systems — Sprinkler protection for accommodation buildings not exceeding four storeys in height'.
AS 2118.5	The 2008 edition of AS 2118 Part 5 'Automatic fire sprinkler systems — Home fire sprinkler systems' has been referenced.
AS 2118.6	The 2012 edition of AS 2118 Part 6 'Automatic fire sprinkler systems — Combined sprinkler and hydrant systems in multistorey buildings.'
AS/NZS 2293.1	Amdt 1 of the 2018 edition of AS/NZS 2293 Part 1 'Emergency lighting and exit signs for buildings — System design, installation and operation (incorporating amendment 1)' has been referenced.
AS 2312.1	The 2014 edition of AS 2312 Part 1 'Guide to the protection of structural steel against atmospheric corrosion by the use of protective coatings — Paint coatings' has been referenced.

Reference	Changes and Commentary
AS/NZS 2312.2	The 2014 edition of AS/NZS 2312 Part 2 'Guide to the protection of structural steel against atmospheric corrosion by the use of protective coatings — Hot dip galvanizing' has been referenced.
AS/NZS 2327	Amdt 1 of the 2017 edition of AS/NZS 2327 'Composite structures — composite steel-concrete construction in buildings (incorporating amendment 1)' has been referenced.
AS 2419.1	The 2021 edition of AS 2419 Part 1 'Fire hydrant installations — System design, installation and commissioning' has been referenced.
AS 2699.1	The 2020 edition of AS 2699 Part 1 'Built-in components for masonry construction — Wall ties' has been referenced. A note has been included to outline transitional arrangements.
AS 2699.3	The 2020 edition of AS 2699 Part 3 'Built-in components for masonry construction — Lintels and shelf angles (durability requirements)' has been referenced. A note has been included to outline transitional arrangements.
AS/NZS 3500.0	The 2021 edition of AS 3500 Part 0 'Plumbing and drainage — Glossary of terms' has been referenced.
AS/NZS 3500.1	The 2021 edition of AS 3500 Part 1 'Plumbing and drainage — Water services' has been referenced.
AS/NZS 3500.2	Amdt 1 of the 2021 edition of AS 3500 Part 2 'Plumbing and drainage — Sanitary plumbing and drainage (incorporating amendment 1)' has been referenced.
AS/NZS 3500.3	The 2021 edition of AS 3500 Part 3 'Plumbing and drainage — Stormwater drainage' has been referenced. A note has been included to outline transitional arrangements.
AS/NZS 3500.4	The 2021 edition of AS 3500 Part 4 'Plumbing and drainage — Heated water services' has been referenced.
AS 3600	Amdt 2 of the 2018 edition of AS 3600 'Concrete structures (incorporating amendments 1 and 2)' has been referenced.
AS 3740	The 2021 edition of AS 3740 'Waterproofing of domestic wet areas' has been referenced.
AS 3959	Amdts 1 and 2 of the 2018 edition of AS 3959 'Construction of buildings in bushfire-prone areas (incorporating amendments 1 and 2)' has been referenced.
AS 4055	The 2021 edition of AS 4055 'Wind loads for housing' has been referenced.
AS 4072.1	The note to AS 4072 Part 1 has been deleted.
AS 4100	The 2020 edition of AS 4100 'Steel structures' has been referenced.
AS 4200.1	Amdt 1 of the 2017 edition of AS 4200 Part 1 'Pliable building membranes and underlays — Materials (incorporating amendment 1)' has been referenced.
AS 4200.2	Amdts 1 and 2 of the 2017 edition of AS 4200 Part 2 'Pliable building membranes and underlays — Installation (incorporating amendments 1 and 2)' has been referenced.

Reference	Changes and Commentary
AS/NZS 4234	The 2021 edition of AS/NZS 4234 'Heated water systems — Calculation of energy consumption' has been referenced.
AS 4254.1	The 2021 edition of AS 4254 Part 1 'Ductwork for air-handling systems in buildings — Flexible duct' has been referenced.
AS/NZS 4256.1	The 1994 edition of AS/NZS 4256 Part 1 'Plastic roof and wall cladding materials — General requirements' has been deleted.
AS/NZS 4256.2	The 1994 edition of AS/NZS 4256 Part 2 'Plastic roof and wall cladding materials — Unplasticized polyvinyl chloride (uPVC) building sheets' has been deleted.
AS/NZS 4256.3	The 1994 edition of AS/NZS 4256 Part 3 'Plastic roof and wall cladding materials — Glass fibre reinforced polyester (GRP)' has been deleted.
AS/NZS 4256.5	The 1996 edition of AS/NZS 4256 Part 5 'Plastic roof and wall cladding materials — Polycarbonate' has been deleted.
AS 4773.2	Amdt 1 of the 2015 edition of AS 4773 Part 2 'Masonry in small buildings — Construction' has been referenced.
AS/NZS 4858	The 2004 edition of AS/NZS 4858 'Wet area membranes' has been referenced.
AS 5146.3	The 2018 edition of AS 5146 Part 3 'Reinforced Autoclaved Aerated Concrete — Construction' has been referenced.
AS 5216	The 2021 edition of AS 5216 'Design of post-installed and cast-in fastenings in concrete' has been referenced.
AS/NZS 5601.1	The 2013 edition of AS/NZS 5601 Part 1 'Gas installations — General installations' has been referenced.
AIRAH-DA07	The 2021 edition of AIRAH-DA07 'Criteria for moisture control design analysis in buildings' has been referenced.
ASTM E903	The 2012 edition of ASTM E903 'Standard Test Method for Solar Absorptance, Reflectance, and Transmittance of Materials Using Integrating Spheres' has been deleted.
ASTM E96	The 2016 edition of ASTM E96 'Standard Test Methods for Water Vapor Transmission of Materials' has been referenced.
ABCB	The 2022 version of the ABCB 'Fire Safety Verification Method' Standard has been referenced. As a consequence, the FSVM is deleted as a standalone schedule.
ABCB	The 2012 edition of AS 2118 Part 6 'Automatic fire sprinkler systems — Combined sprinkler and hydrant systems in multistorey buildings.'
ABCB	The 2022 version of the ABCB 'Livable Housing Design' Standard has been referenced.
ABCB	The 2022 version of the ABCB 'Standard for NatHERS Heating and Cooling Load Limits' has been referenced.
ABCB	The 2022 version of the ABCB 'Standard for Whole-of-home Efficiency Factors' has been referenced.
FPAA101D	The 2021 edition of FPAA101D 'Automatic Fire Sprinkler System Design and Installation — Drinking Water Supply' has been referenced.

Reference	Changes and Commentary
FPAA101H	Amdt 1 of the 2018 edition of FPAA101H 'Automatic Fire Sprinkler System Design and Installation — Hydrant Water Supply (incorporating amendment 1)' has been referenced.
NASH Standard	The 2021 edition of NASH Standard 'Steel Framed Construction in Bushfire Areas' has been referenced.
NSF/ANSI/CAN 372	The 2020 edition of NSF/ANS/CAN 372 'Drinking Water System Components — Lead Content' has been referenced.

Section A Governing requirements

Part A1 Interpreting the NCC

Governing Requirements

A1G1	Scope of NCC Volume One
A1G2	Scope of NCC Volume Two
A1G3	Scope of NCC Volume Three
A1G4	Interpretation

Part A2 Compliance with the NCC

Governing Requirements

A2G1	Compliance
A2G2	Performance Solution
A2G3	Deemed-to-Satisfy Solution
A2G4	A combination of solutions

Part A3 Application of the NCC in States and Territories

Governing Requirements

A3G1	State and Territory compliance

Part A4 Referenced documents

Governing Requirements

A4G1	Referenced documents
A4G2	Differences between referenced documents and the NCC
A4G3	Adoption of referenced documents

Part A5 Documentation of design and construction

Governing Requirements

A5G1	Suitability
A5G2	Evidence of suitability — Volumes One, Two and Three
A5G3	Evidence of suitability — Volumes One and Two (BCA)
A5G4	Evidence of suitability — Volume Three (PCA)
A5G5	Fire-resistance of building elements
A5G6	Fire hazard properties
A5G7	Resistance to the incipient spread of fire
A5G8	Labelling of Aluminium Composite Panels
A5G9	NatHERS

Part A6 Building classification

Governing Requirements

A6G1	Determining a building classification
A6G2	Class 1 buildings
A6G3	Class 2 buildings
A6G4	Class 3 buildings
A6G5	Class 4 buildings
A6G6	Class 5 buildings
A6G7	Class 6 buildings
A6G8	Class 7 buildings

	A6G9	Class 8 buildings
	A6G10	Class 9 buildings
	A6G11	Class 10 buildings and structures
	A6G12	Multiple classifications
Part A7	**United buildings**	
	Governing Requirements	
	A7G1	United buildings
	A7G2	Alterations in a united building
Specification 1	**Fire-resistance of building elements**	
	S1C1	Scope
	S1C2	Rating
	S1C3	FRLs determined by calculation
	S1C4	Interchangeable materials
	S1C5	Columns covered with lightweight construction
	S1C6	Non-loadbearing elements
Specification 2	**Descriptions of elements referred to in Specification 1**	
	S2C1	Scope
	S2C2	Mortar for masonry
	S2C3	Gypsum blocks
	S2C4	Gypsum-sand mortar and plaster
	S2C5	Gypsum-perlite and gypsum-vermiculite plaster
	S2C6	Plaster of cement and sand or cement, lime and sand
	S2C7	Plaster reinforcement
	S2C8	Ashlar stone masonry
	S2C9	Dimensions of masonry
	S2C10	Solid units
	S2C11	Hollow units
	S2C12	Equivalent thickness
	S2C13	Height-to-thickness ratio of certain walls
	S2C14	Increase in thickness by plastering — walls
	S2C15	Increase in thickness by plastering — columns
	S2C16	Gypsum-perlite or gypsum-vermiculite plaster or metal lath — walls
	S2C17	Gypsum-perlite or gypsum-vermiculite plaster or metal lath — columns
	S2C18	Gypsum-perlite or gypsum-vermiculite plaster or metal lath — beams
	S2C19	Exposure of columns
	S2C20	Exposure of beams
	S2C21	Filling of column spaces
	S2C22	Hollow terracotta blocks
	S2C23	Reinforcing for column and beam protection — masonry
	S2C24	Reinforcing for column and beam protection — gypsum blocks and hollow terracotta blocks
	S2C25	Reinforcing for column and beam protection — structural con

		crete and poured gypsum
	S2C26	Reinforcing for column and beam protection — gypsum-perlite or gypsum-vermiculite plaster sprayed to contour
	S2C27	Measurement of thickness of column and beam protection
Specification 3	**Fire hazard properties**	
	S3C1	Scope
	S3C2	General requirement
	S3C3	Form of test
	S3C4	Test specimens
	S3C5	Concession
	S3C6	Smaller specimen permitted

Part A1 Interpreting the NCC

Introduction to this Part

This Part explains important concepts on how the NCC must be interpreted and applied. There are certain conventions and approaches that need to be taken into account when using the NCC. This includes interpreting specific language and terms. This is critical to understanding the intended technical and legal meaning of the NCC. This Part also explains the difference between the mandatory Parts of the NCC and the Parts that are only explanatory or guidance in nature.

Governing Requirements

A1G1 Scope of NCC Volume One

[New for 2022]

NCC Volume One contains the requirements for—

(a) all Class 2 to 9 buildings; and

(b) access requirements for people with a disability in Class 1b and 10a buildings; and

(c) certain Class 10b structures including access requirements for people with a disability in Class 10b *swimming pools*.

A1G2 Scope of NCC Volume Two

[New for 2022]

NCC Volume Two contains the requirements for—

(a) Class 1 and 10a buildings (other than access requirements for people with a disability in Class 1b and 10a buildings); and

(b) certain Class 10b structures (other than access requirements for people with a disability in Class 10b *swimming pools*); and

(c) Class 10c *private bushfire shelters*.

A1G3 Scope of NCC Volume Three

[New for 2022]

(1) NCC Volume Three contains technical requirements for the design, construction, installation, replacement, repair, alteration and maintenance for *plumbing* and *drainage* systems in new and existing buildings.

(2) NCC Volume Three applies to these systems in all classes of buildings whenever *plumbing* and *drainage* work is carried out.

(3) NCC Volume Three additionally applies to *sites* where services are designed, constructed, installed, replaced, repaired, altered and maintained independently of buildings.

(4) NCC Volume Three applies from the *point of connection* to the point of discharge.

A1G4 Interpretation

[2019: A1.0]

(1) The following components of the NCC are non-mandatory and informative:

(a) Content identified as “explanatory information”.

(b) The “Introduction” information, located at the beginning of each Volume, Section or Part.

(2) Words in italics must be interpreted in accordance with—

(a) definitions provided in Schedule 1, unless the contrary intention appears; and

(b) additional definitions in State or Territory appendices, as appropriate.

(3) The NCC must be interpreted and applied in accordance with the following:

(a) A reference to a building is a reference to an entire building or part of a building (as the case requires).

(b) A reference to *plumbing or drainage solution*, or *product* in Volume Three is a reference to an entire installation, system or *product*, or part of an installation, system or *product* (as the case requires).

(c) A reference in a *Performance Requirement* to "the degree necessary" means—

(i) that consideration of all the criteria referred to in the *Performance Requirement* will determine the outcome appropriate to the circumstances; and

(ii) that in certain cases it may not be necessary to incorporate any specific measures to meet the relevant *Performance Requirement*.

(d) An "Application" statement is mandatory and is provided to specify where and when a requirement or provision applies.

(e) A "Limitation" statement is mandatory and is provided to specify where and when the application of a requirement or provision is limited to a certain circumstance.

(f) An "Exemption" statement is mandatory and is provided to specify where or when a requirement or provision does not need to be complied with.

(g) A "Note" is part of a provision or requirement and provides additional mandatory instructions.

(h) Figures in the NCC—

(i) are used to illustrate specific issues referenced in the associated text; and

(ii) are not to be construed as containing all design information that is *required* for that particular building element or situation.

(i) The definitions, symbols and abbreviations listed in Schedule 1.

(4) A reference to a building class is a reference to all the sub-classifications of that class.

(5) The following sub-classifications apply:

(a) Classes 1a and 1b are sub-classifications of Class 1.

(b) Classes 7a and 7b are sub-classifications of Class 7.

(c) Classes 9a, 9b and 9c are sub-classifications of Class 9.

(d) Classes 10a, 10b and 10c are sub-classifications of Class 10.

(6) A reference to a sub-classification is solely to that sub-classification.

TAS A1G4(7)

Notes

For Volume Three, if a word is not defined in Schedule 1, the meaning (if any) attributed to it under AS/NZS 3500.0 should be used unless the contrary intention appears.

Explanatory Information

Explanatory information and Introduction information contained in the NCC is non-mandatory and is provided for guidance purposes only. This informative material should be read in conjunction with the technical provisions of the NCC. Any statements made in the informative and guidance components of the NCC should not be taken to override the NCC. Unlike the NCC, which is adopted by legislation, the informative and guidance components are not called up into legislation and they do not cover State and Territory variations and additions. Because informative and guidance components of the NCC do not have regulatory force, the ABCB accepts no responsibility for its contents when applied to specific buildings or any liability which may result from its use.

Defined words provide the precise meaning and expressions of key words used for understanding and complying with the NCC. Where a word is not defined in the NCC, the relevant common meaning of the word should be used.

Generally, a reference to a building is a reference to the whole building, regardless of classification. However, when a

provision is applicable to a specific class or classes of building, that reference to a building may be a reference to the whole building or part of the building depending on how the building is classified.

Classes 1a and 1b, 7a and 7b, 9a, 9b and 9c, and 10a, 10b and 10c are separate classifications. In the NCC, when the designation 'a', 'b' or 'c' is not applied, the reference is to all buildings of the general class. For example, 'Class 9b' refers only to Class 9b buildings, but 'Class 9' refers to Classes 9a, 9b and 9c.

Whether a provision applies or not depends on the circumstances of the case and the circumstances in which the reference is made. For example, where a building has a single classification, a reference to a building in the NCC is understandably a reference to a whole building. However, where a building has parts of different classification, unless the contrary intention appears (i.e. there is a specific reference to the whole building), a reference to a building in the NCC is a reference to the relevant part of the building. This means that each part of the building must comply with the relevant provisions for its classification.

A number of the *Performance Requirements* of the NCC use the expression "to the degree necessary" or "appropriate to". These expressions provide flexibility by allowing appropriate authorities to determine the degree of compliance necessary in a particular case. Therefore, any part of the NCC that uses these expressions should be referenced against the requirements of the *appropriate authority*. For example, an *appropriate authority* might judge that an item need not be installed, or a particular level of performance be achieved.

Application, Limitation, and Exemption statements are used to identify provisions that may or may not apply in certain situations, to varying degrees.

Figures are used to explain the requirements of a particular clause. To ensure the context of the requirement is clearly understood, adjacent construction elements of the building that would normally be required in that particular situation are not always shown. Accordingly, aspects of figures that are not shown should not be interpreted as meaning these construction details are not *required*. Therefore a figure must not be used as an indication of the full construction requirements in a given situation, as the only available option, or a substitute for referencing appropriate construction requirements (in other sources) for a given clause.

Part A2 Compliance with the NCC

Introduction to this Part

This Part explains the possible methods of demonstrating compliance with the NCC. It explains the various compliance pathways within the NCC and the appropriate steps that must be taken for each of these pathways.

Governing Requirements

A2G1 Compliance

[2019: A2.0, A2.1]

(1) Compliance with the NCC is achieved by complying with—

(a) the Governing Requirements of the NCC; and

(b) the *Performance Requirements*.

(2) *Performance Requirements* are satisfied by one of the following, as shown in Figure A2G1:

(a) *Performance Solution*.

(b) *Deemed-to-Satisfy Solution*.

(c) A combination of (a) and (b).

Figure A2G1: NCC compliance structure

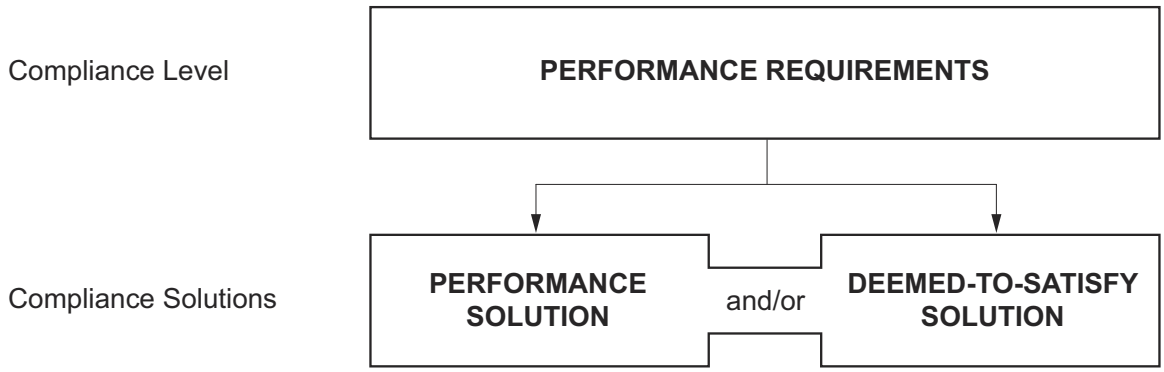

A2G2 Performance Solution

[2019: A2.2]

(1) A *Performance Solution* is achieved by demonstrating—

(a) compliance with all relevant *Performance Requirements*; or

(b) the solution is at least *equivalent* to the *Deemed-to-Satisfy Provisions*.

(2) A *Performance Solution* must be shown to comply with the relevant *Performance Requirements* through one or a combination of the following *Assessment Methods*:

(a) Evidence of suitability in accordance with Part A5 that shows the use of a material, product, *plumbing* and *drainage product*, form of construction or design meets the relevant *Performance Requirements*.

(b) A *Verification Method* including the following:

(i) The *Verification Methods* provided in the NCC.

(ii) Other *Verification Methods*, accepted by the *appropriate authority* that show compliance with the relevant *Performance Requirements*.

(c) *Expert Judgement*.

(d) Comparison with the *Deemed-to-Satisfy Provisions*.

(3) Where a *Performance Requirement* is satisfied entirely by a *Performance Solution*, in order to comply with (1) the following method must be used to determine the *Performance Requirement* or *Performance Requirements* relevant to the *Performance Solution*:

(a) Identify the relevant *Performance Requirements* from the Section or Part to which the *Performance Solution* applies.

(b) Identify *Performance Requirements* from other Sections or Parts that are relevant to any aspects of the *Performance Solution* proposed or that are affected by the application of the *Performance Solution*.

(4) Where a *Performance Requirement* is proposed to be satisfied by a *Performance Solution*, the following steps must be undertaken:

(a) Prepare a *performance-based design brief* in consultation with relevant stakeholders.

(b) Carry out analysis, as proposed by the *performance-based design brief*.

(c) Evaluate results from (4)(b) against the acceptance criteria in the *performance-based design brief*.

(d) Prepare a final report that includes—

(i) all *Performance Requirements* and/or *Deemed-to-Satisfy Provisions* identified through A2G2(3) or A2G4(3) as applicable; and

(ii) identification of all *Assessment Methods* used; and

(iii) details of steps (4)(a) to (4)(c); and

(iv) confirmation that the *Performance Requirement* has been met; and

(v) details of conditions or limitations, if any exist, regarding the *Performance Solution*.

VIC A2G2(5)

A2G3 Deemed-to-Satisfy Solution

[2019: A2.3]

(1) A solution that complies with the *Deemed-to-Satisfy Provisions* is deemed to have met the *Performance Requirements*.

(2) A *Deemed-to-Satisfy Solution* can show compliance with the *Deemed-to-Satisfy Provisions* through one or more of the following *Assessment Methods*:

(a) Evidence of suitability in accordance with Part A5 that shows the use of a material, product, *plumbing* and *drainage product*, form of construction or design meets a *Deemed-to-Satisfy Provision*.

(b) *Expert Judgement*.

A2G4 A combination of solutions

[2019: A2.4]

(1) *Performance Requirements* may be satisfied by using a combination of *Performance Solutions* and *Deemed-to-Satisfy Solutions*.

(2) When using a combination of solutions, compliance can be shown through the following, as appropriate:

(a) A2G2 for assessment against the relevant *Performance Requirements*.

(b) A2G3 for assessment against the relevant *Deemed-to-Satisfy Provisions*.

(3) Where a *Performance Requirement* is satisfied by a *Performance Solution* in combination with a *Deemed-to-Satisfy Solution*, in order to comply with (1), the following method must be used to determine the *Performance Requirement* or *Performance Requirements* relevant to the *Performance Solution*:

(a) Identify the relevant *Deemed-to-Satisfy Provisions* of each Section or Part that are to be the subject of the *Performance Solution*.

(b) Identify the *Performance Requirements* from the same Sections or Parts that are relevant to the identified

Deemed-to-Satisfy Provisions.

(c) Identify *Performance Requirements* from other Sections or Parts that are relevant to any aspects of any *Performance Solution* proposed or that are affected by the application of the *Deemed-to-Satisfy Provisions* that are the subject of the *Performance Solution*.

Explanatory Information

To comply with the NCC, a solution must achieve compliance with the Governing Requirements and the *Performance Requirements*. The Governing Requirements contain requirements about how the *Performance Requirements* must be met.

Performance Requirements outline the minimum necessary standards different buildings or building elements must attain. The *Performance Requirements* are the only NCC technical provisions that must be satisfied.

In some instances, State and Territory variations and additions may also be applicable to certain *Performance Requirements*.

A solution may be partly a *Performance Solution* and partly a *Deemed-to-Satisfy Solution*. However, no matter what method is chosen, building proponents need to always meet the *Performance Requirements* of the NCC.

A2G2(2)(b)(ii) provides for the use of *Verification Methods* that are not listed in the NCC. A *Verification Method* may include—

- a calculation, using analytical methods or mathematical models; or
- a test, using a technical procedure, either on-site or in a laboratory, to directly measure the extent to which the *Performance Requirements* have been met; or
- an inspection (and inspection report); or
- any other acceptable form of certification.

Any *Verification Method* used must be acceptable to the *appropriate authority*.

A *Performance Solution* must comply with all applicable *Performance Requirements* of the NCC. A *Performance Solution* provides a tailored solution to meet the intended objective of the *Performance Requirements*. A *Performance Solution* must comply with all relevant *Performance Requirements* and must be verified using one or a combination of the following *Assessment Methods*:

- Evidence of suitability.
- *Verification Method*.
- *Expert Judgement*.
- Comparison with the *Deemed-to-Satisfy Provisions*.

For example, building proponents who wish to know what has to be done to satisfy the fire safety *Performance Requirements* for a particular building can either follow the *Deemed-to-Satisfy Provisions* or develop a *Performance Solution*. Guidance on how to develop *Performance Solutions* can be found on the ABCB website at: www.abcb.gov.au. The ABCB Resource Library contains information on the development of *Performance Solutions* for both building and plumbing.

A *Deemed-to-Satisfy Solution* is achieved by following all appropriate *Deemed-to-Satisfy Provisions* in the NCC. The *Deemed-to-Satisfy Provisions* are prescriptive (i.e. like a recipe book, they tell you how, what and in which location things must be done). They include materials, components, design factors, and construction methods that, if used, are deemed to meet the *Performance Requirements*, hence the term “Deemed-to-Satisfy”.

A *Deemed-to-Satisfy Solution* may be verified using one or a combination of the following *Assessment Methods*:

- Evidence of suitability.
- *Expert Judgement*.

Some *Performance Requirements* are without *Deemed-to-Satisfy Solutions*. Compliance with these *Performance Requirements* must be achieved by using a *Performance Solution*.

When designing a building or *plumbing* or *drainage* system, both *Performance Solutions* and *Deemed-to-Satisfy Solutions* can be used to achieve compliance with *Performance Requirements*. A combination of solutions may be used to satisfy a single *Performance Requirement*. This may include occasions where a specific *Performance Requirement* covers a number of elements of a building or *plumbing* or *drainage* system.

No NCC provision can be considered in isolation. Any departure from the *Deemed-to-Satisfy Provisions* for a

Performance Solution needs to be assessed against the relevant *Performance Requirements* within the relevant NCC Section or Part. Additionally, the proposed *Performance Solution* may also impact on other *Performance Requirements* in other Sections or Parts. Thus, these additional *Performance Requirements* need to be considered in relation to the subject *Performance Solution*. A2G2(3) and A2G4(3) set out the methods for determining which *Performance Requirements* are relevant.

It is important that a holistic approach is used when determining the appropriate *Performance Requirements*.

A2G4(2)(a) references A2G2. Therefore, when using a combination of *Performance Solutions* and *Deemed-to-Satisfy Solutions* it is necessary to comply with A2G2(4) where a *Performance Requirement* is proposed to be satisfied by a *Performance Solution*.

More information on NCC compliance methods is located at www.abcb.gov.au.

Part A3 Application of the NCC in States and Territories

Introduction to this Part

This Part explains applying the NCC in accordance with State or Territory legislation. The NCC has legal effect through references in relevant State or Territory building and plumbing legislation.

Although the NCC is a nationally consistent code, there are some situations where a State or Territory enforces a variation, addition or deletion to it. This Part also explains how these variations, additions and deletions apply.

Governing Requirements

A3G1 State and Territory compliance

[2019: A3.0]

(1) For application within a particular State or Territory, the volumes of the NCC comprise inclusively of—

(a) Sections A to G, I and J and associated schedules of Volume One; and

(b) Sections A and H and associated schedules of Volume Two; and

(c) Sections A to E and associated schedules of Volume Three.

(2) State and Territory variations, additions and deletions must be complied with in conjunction with the NCC.

(3) The NCC is subject to, and may be overridden by, State or Territory legislation.

(4) State and Territory variations, additions and deletions are contained in the following Schedules:

(a) Schedule 3: Commonwealth of Australia.

(b) Schedule 4: Australian Capital Territory.

(c) Schedule 5: New South Wales.

(d) Schedule 6: Northern Territory.

(e) Schedule 7: Queensland.

(f) Schedule 8: South Australia.

(g) Schedule 9: Tasmania.

(h) Schedule 10: Victoria.

(i) Schedule 11: Western Australia.

(5) State and Territory variations and deletions are identified throughout the NCC.

Explanatory Information

The NCC is given legal effect by building regulatory legislation in each State and Territory. This legislation consists of an Act of Parliament and subordinate legislation which empowers the regulation of certain aspects of building and plumbing, and contains the administrative provisions necessary to give effect to the legislation.

Although the NCC is a national code, in some instances it is necessary for a State or Territory to vary or apply additional requirements specific to their jurisdiction. A3G1(2) highlights that these variations, additions or deletions must be applied in conjunction with the NCC provisions. Typically, these variations, additions or deletions override the requirements contained within the NCC.

Any provision of the NCC may be overridden by, or subject to, State or Territory legislation. The NCC must therefore be read in conjunction with that legislation. Any queries on such matters should be referred to the State or Territory authority responsible for building and plumbing regulatory matters.

Where a requirement or provision of the NCC is subject to a State or Territory variation, addition, or deletion, a reference to the appropriate provision in the applicable State or Territory schedule is included with that requirement or provision.

Part A4 Referenced documents

Introduction to this Part

This Part explains how documents referenced in the NCC are adopted and applied. The NCC itself does not contain details of every design and construction requirement for a building or *plumbing* or *drainage* system. As such, the NCC calls upon or "references" other documents with this information. These are called NCC referenced documents. Examples of such documents are Australian Standards, ABCB protocols, ABCB standards and other publications.

There are multiple types of referenced documents. A primary referenced document is one referenced in Schedule 2 of the NCC. A secondary referenced document is one referenced in a primary referenced document. Other referenced documents are referenced by secondary and subsequently referenced documents.

Governing Requirements

A4G1 Referenced documents

[2019: A4.0]

(1) A reference in the NCC to a document refers to the edition or issues and any amendment listed in Schedule 2.

(2) A document referenced in the NCC is only applicable in the context in which the document is quoted.

TAS A4G1(3)

(3) Where a new edition, issue or amendment of a primary referenced document is not listed in Schedule 2, the new edition, issue or amendment is not referenced for the purpose of the NCC.

(4) Any document referenced in a primary referenced document is known as a secondary referenced document.

(5) A reference in a primary referenced document to a secondary or other referenced document is a reference to the document as it existed at the time of publication of the primary referenced document.

Applications

A4G1 applies to documents referenced in the ABCB Housing Provisions in the same way as for documents referenced within any other part of the NCC.

Exemptions

If the secondary or other referenced document is also a primary referenced document, A4G1(5) does not apply.

A4G2 Differences between referenced documents and the NCC

[2019: A4.1]

The NCC overrules any difference between the NCC (including the ABCB Housing Provisions) and a primary referenced document, including any secondary referenced document.

Applications

A4G2 applies to documents referenced in the ABCB Housing Provisions in the same way as for other documents referenced by Volumes One, Two or Three of the NCC.

A4G3 Adoption of referenced documents

[2019: A4.2]

The NCC does not require compliance with requirements in relation to the following matters where they are prescribed in a referenced document:

(a) The rights, responsibilities or obligations between the manufacturer, supplier or purchaser.

(b) The responsibilities of any tradesperson or other building operative, architect, engineer, authority, or other person or body.

(c) The submission for approval of any material, building component, form or method of construction, to any person, authority or body other than those empowered under State or Territory legislation to give that approval.

(d) The submission of a material, product, form of construction or design to any person, authority or body for opinion.

(e) Any departure from the NCC, rule, specification or provision at the sole discretion of the manufacturer or purchaser, or by arrangement or agreement between the manufacturer and purchaser.

Applications

A4G3 applies to documents referenced in the ABCB Housing Provisions in the same way as for documents referenced within Volumes One, Two or Three of the NCC.

Explanatory Information

Schedule 2 is only mandatory to *Deemed-to-Satisfy Provisions*, Specifications and *Verification Methods*. However, referenced documents are only applicable to the NCC provision that references the document.

A proponent undertaking a *Performance Solution* can use any element or edition of any document, if they help satisfy the *Performance Requirements*. They do not need to use the documents listed in Schedule 2.

Schedule 2 lists the specific edition of the Standard or other document adopted, including any amendments considered appropriate for Schedule 2, the *Deemed-to-Satisfy Provisions*, Specifications or *Verification Methods*. Other editions of (or amendments to) the referenced document are not adopted and have no standing under the NCC.

A primary referenced document may refer to a secondary referenced document. A4G1(5) stipulates that the secondary referenced document is the edition of the document that existed at the time of publication of the primary referenced document. When another edition of (or amendment to) a secondary referenced document is released, subject to the exemption to A4G1, that edition (or amendment) is not adopted for the purposes of the primary referenced document.

A4G3 means that contractual matters or clauses defining responsibilities of various parties, and matters not appropriate for adoption in the NCC are not included when a document is called up in the NCC.

Part A5 Documentation of design and construction

Introduction to this Part

This Part explains the evidence needed to show that the NCC requirements are met and the solution is "fit for purpose". It covers the use of materials, products, forms of construction and designs. It details separate requirements for the BCA and PCA.

Examples of evidence to be prepared and retained include certificates, reports, calculations and any other documents or information showing compliance with the NCC requirements.

Governing Requirements

A5G1 Suitability

[2019: A5.0]

(1) A building and *plumbing* or *drainage* installation must be constructed using materials, products, *plumbing products*, forms of construction and designs fit for their intended purpose to achieve the relevant requirements of the NCC.

(2) For the purposes of (1), a material, product, *plumbing product*, form of construction or design is fit for purpose if it is—

(a) supported by evidence of suitability in accordance with—

(i) A5G2; and

(ii) A5G3 or A5G4 as appropriate; and

(b) constructed or installed in an appropriate manner.

Explanatory Information

A5G1 relates to the quality of work and materials needed to construct a building to meet NCC requirements.

This means that—

- all people involved with construction must work skillfully in accordance with good trade practice; and
- all materials must be of a quality to fulfil their function/s within the building.

A5G1 only applies to matters normally covered by the NCC.

While A5G1 outlines quality of work and material demands, sometimes additional conditions may be required by—

- other Commonwealth, State or Territory legislation; and
- contracts that include either specific quality requirements, or requirements for specific materials and the like.

Explanatory Information: Example

Permit authorities would ordinarily not apply A5G1 to such matters as—

- plastering — other than for fire rating, waterproofing of *wet areas*, and sound insulation; or
- painting — other than that required for weatherproofing an *external wall*.

When determining which form of evidence will be used, it is important to consider the appropriateness of the evidence, as some forms of evidence may be more suitable to materials and products and others to designs and forms of construction. The requirement to consider appropriateness of the evidence is specified in A5G2(1).

A5G2 Evidence of suitability — Volumes One, Two and Three

[2019: A5.1]

(1) The form of evidence used must be appropriate to the use of the material, product, *plumbing product*, form of construction or design to which it relates.

(2) Any copy of documentary evidence submitted must be a complete copy of the original certificate, report or document.

Explanatory Information

For further guidance, refer to the ABCB Handbook for Evidence of Suitability.

All copies of documents provided as evidence must be unabridged copies of the originals. No part can be left incomplete.

A5G3 Evidence of suitability — Volumes One and Two (BCA)

[2019: A5.2]

(1) Subject to A5G5, A5G6, A5G7 and A5G9, evidence to support that the use of a material, product, form of construction or design meets a *Performance Requirement* or a *Deemed-to-Satisfy Provision* may be in the form of any one, or any combination of the following:

(a) A current CodeMark Australia or CodeMark *Certificate of Conformity*.

(b) A current *Certificate of Accreditation*.

(c) A current certificate, other than a certificate described in (a) and (b), issued by a *certification body* stating that the properties and performance of a material, product, form of construction or design fulfil specific requirements of the BCA.

(d) A report issued by an *Accredited Testing Laboratory* that—

(i) demonstrates that a material, product or form of construction fulfils specific requirements of the BCA; and

(ii) sets out the tests the material, product or form of construction has been subjected to and the results of those tests and any other relevant information that has been relied upon to demonstrate it fulfils specific requirements of the BCA.

(e) A certificate or report from a *professional engineer* or other *appropriately qualified person* that—

(i) certifies that a material, product, form of construction or design fulfils specific requirements of the BCA; and

(ii) sets out the basis on which it is given and the extent to which relevant standards, specifications, rules, codes of practice or other publications have been relied upon to demonstrate it fulfils specific requirements of the BCA.

(f) Another form of documentary evidence, such as but not limited to a *Product Technical Statement*, that—

(i) demonstrates that a material, product, form of construction or design fulfils specific requirements of the BCA; and

(ii) sets out the basis on which it is given and the extent to which relevant standards, specifications, rules, codes of practice or other publications have been relied upon to demonstrate it fulfils specific requirements of the BCA.

(2) Evidence to support that a calculation method complies with an ABCB protocol may be in the form of any one, or any combination of the following:

(a) A certificate from a *professional engineer* or other *appropriately qualified person* that—

(i) certifies that the calculation method complies with a relevant ABCB protocol; and

(ii) sets out the basis on which it is given and the extent to which relevant standards, specifications, rules, codes of practice and other publications have been relied upon.

(b) Another form of documentary evidence that correctly describes how the calculation method complies with a relevant ABCB protocol.

Applications

A5G3 is only applicable to NCC Volumes One and Two (BCA).

Notes

Current documentary evidence, such as a certificate or report, containing references to NCC 2019 provisions remains valid despite amended provision references in NCC 2022, subject to technical requirements remaining the same between editions.

Explanatory Information

A5G3 represents the minimum level of documentary evidence needed to show that a material, product, form of construction or design meets the relevant NCC requirements. The evidence can be required by:

- an *appropriate authority*;
- a party to a construction contract; or
- a person certifying compliance with the NCC.

If a building proponent does not produce exactly what is required, the evidence may be rejected.

It should be noted that 'design' may refer to engineering design, architectural design as well as product and material design.

A5G3(1)(f) allows for the use of alternative forms of documentary evidence to those included in A5G3(1)(a) to (e), as long as they comply with certain specified conditions.

An example of this arises when an authority carries out an inspection of a building site. The inspection alone would not be acceptable as evidence. However, if the authority compiled a written report detailing findings and conclusions from the inspection, then it may comply with the requirements of A5G3(1)(f).

A *Product Technical Statement* detailing the characteristics and merits of a particular product or system is also an example of another form of documentary evidence.

There is significant reliance by industry on the use of calculation methods, including software programs, for demonstrating compliance with the NCC. While there is no formal recognition of specific methods, A5G3(2) allows suitable evidence to be submitted to demonstrate that a calculation method (including a software program) complies with a relevant ABCB protocol that establishes the characteristics of a suitable calculation method.

If under a *Deemed-to-Satisfy Provision* a building element is *required* to have an FRL, then A5G3 may be used to provide evidence to show that the FRL has been determined in accordance with Specification 1 and 2.

In the case of a test report from an *Accredited Testing Laboratory*, the report may be either—

- the test report referred to in clause 2.16.2 of AS 1530.4 (also referred to as a full test report); or
- the regulatory information report referred to in clause 2.16.3 of AS 1530.4 (also referred to as a short-form report).

In both cases the report must be an unabridged copy of the original report. A test certificate referred to in clause 2.16.4 of AS 1530.4 on its own is not suitable for showing compliance with the NCC.

If a proposal uses a *Deemed-to-Satisfy Provision* that requires a building element to have *fire hazard properties*, then A5G3 may be used to provide evidence to support the proposal and show that the *fire hazard properties* have been determined in accordance with A5G6.

Refer to the guidance provided in the Guide to Volume One for further information on *fire hazard properties* which includes—

- *Flammability Index*; and
- *Spread-of-Flame Index*; and
- *Smoke-Developed Index*; and
- a material's *group number*; and
- *smoke growth rate index*.

The *Deemed-to-Satisfy Provisions* of the BCA contain a number of provisions requiring a ceiling to have a *resistance to the incipient spread of fire* to the space above itself. A5G7 sets out the method of determining the incipient spread of fire. The method is based on the method of determining the FRL of a building element and use of the *Standard Fire Test*.

A5G4 Evidence of suitability — Volume Three (PCA)

[2019: A5.3]

(1) Any *product* that is intended for use in contact with *drinking water* must comply with the relevant requirements of AS/NZS 4020, verified in the form of either—

(a) a test report provided by an *Accredited Testing Laboratory*, in accordance with AS/NZS 4020; or

(b) a *WaterMark Licence* issued in accordance with (3), if it includes compliance with AS/NZS 4020.

(2) Any *product* that contains copper alloy and is intended for use in contact with *drinking water* must have a *weighted average* lead content of not more than 0.25% verified in the form of either—

(a) a test report provided by an *Accredited Testing Laboratory*, in accordance with NSF/ANSI/CAN 372; or

(b) a *WaterMark Licence* issued in accordance with (3), if it includes compliance with NSF/ANSI/CAN 372.

(3) A *product* of a type listed on the *WaterMark Schedule of Products* is deemed to be fit for its intended purpose if it has a *WaterMark Licence* issued in accordance with the WaterMark Scheme Rules.

(4) A *product* of a type listed on the *Watermark Schedule of Excluded Products* requires evidence of suitability in the form of—

(a) a current certificate issued by a *certification body* stating that the properties and performance of a *product* can meet the requirements of the PCA; or

(b) a report issued by an *Accredited Testing Laboratory* that—

(i) demonstrates that the *product* complies with the relevant requirements of the PCA; and

(ii) sets out the tests the *product* has been submitted to and the results of those tests and any other relevant information that has been relied upon to demonstrate suitability for use in a *plumbing* or *drainage* installation.

(5) Any *product* that is not covered by (3) or (4) must be subjected to a risk assessment in accordance with the WaterMark Scheme Rules.

(6) Evidence to support that a design or system meets the relevant PCA *Performance Requirements* must be in the form of any one or any combination of the following:

(a) The design or system complies with a *Deemed-to-Satisfy Provision*.

(b) The design or system is a *Performance Solution* from a *professional engineer* or a *recognised expert* that—

(i) certifies that the design or system complies with the relevant requirements of the PCA; and

(ii) sets out the basis on which it is given and the extent to which relevant standards, specifications, rules, codes of practice or other publications have been relied upon.

(c) Any other form of documentary evidence that—

(i) demonstrates that a design or system complies with the relevant requirements of the PCA; and

(ii) sets out the basis on which it is given and the extent to which relevant standards, specifications, rules, codes of practice or other publications have been relied upon.

TAS A5G4(10)

TAS A5G4(7)

TAS A5G4(8)

TAS A5G4(9)

Notes

On-site wastewater management systems larger than covered by the standards are exempt and a *Performance Solution* is required.

Notes

(1) A5G4(2) does not take effect until the completion of the transition period specified by WaterMark Notice of Direction 2021/4.

(2) Note 1 does not prevent the use of *products* certified in accordance with A5G4(2) prior to the completion of the transition period specified by the WaterMark Notice of Direction 2021/4.

Applications

Products subject to the requirements of A5G4(2) are specifically nominated in the *WaterMark Schedule of Products* and the *WaterMark Schedule of Excluded Products*.

Exemptions

(1) *Products* that are used exclusively for non-drinking uses such as manufacturing, industrial processing, irrigation or any other uses where water is not anticipated to be used for human consumption are excluded from the requirements of A5G4(2).

Explanatory Information

Some examples of products subject to A5G4(2) include the following:

- Copper alloy fittings.
- Stainless-steel braided hoses.
- Valves (such as valves for isolation, backflow prevention, alteration of pressure and temperature).
- Taps and mixers.
- Water meters.
- Pumps (for use with cold and heated water services).
- Water heaters.
- Residential water filtration equipment.
- Water dispensers (such as boiling and cooling units, drinking fountains and bottle fillers).
- Fire sprinkler systems connected to the cold water service that are not isolated from fixtures and fittings intended to supply water for human consumption.

Some examples of products excluded from the requirements of A5G4(2) include the following:

- Shower heads for bathing.
- Emergency showers, eye wash and/or face wash equipment.
- Pumps used for irrigation, fire-fighting or other non-drinking water purposes.
- Fire-fighting water services and equipment including residential fire sprinklers.
- Appliances, including washing machines and dishwashers.
- Commercial boilers associated with heating, ventilation and air-conditioning systems.
- Sanitary fixtures (such as toilets, cistern inlet valves, bidets and urinals.
- Non-drinking water systems (such as recycled water systems).

Product certification transition arrangements are outlined in Notices of Direction issued through the *WaterMark Certification Scheme*.

Lead is currently permitted in small proportions in the raw materials used to manufacture some *plumbing products*. Whilst the allowable lead levels permitted in *products* manufactured prior to 1 September 2025 ensures compliance with the Australian Drinking Water Guidelines, the use of products compliant with the lead levels in A5G4(2) is encouraged, to avoid the potential for adverse effects on human health.

A5G4(1) requires any *product* intended for use in contact with *drinking water* to comply with AS/NZS 4020. Compliance is achieved by passing the relevant tests set out in the Standard.

Evidence of compliance must then be provided in accordance with A5G4(1), under which there are two options. The first, at A5G4(1)(a), recognises test reports and certificates that cover compliance with AS/NZS 4020 only. The second, at A5G4(1)(b), recognises *WaterMark Licences* where compliance with AS/NZS 4020 is a requirement of the relevant *product* Standard or WaterMark Technical Specification.

For *products* that are of a type listed on the *WaterMark Schedule of Products*, A5G4(2) requires that these *products* have a *WaterMark Licence*. A *WaterMark Licence* reflects that the *product* has been certified and authorised in accordance with the WaterMark Scheme Rules.

For *products* that are not subject to WaterMark certification (i.e. excluded *products*), evidence that can be used to

support that the *product* is fit for its intended purpose is provided in A5G4(3). This may include demonstrating compliance with a *product* specification referenced in the *WaterMark Schedule of Excluded Products*, where one is available.

A5G4(4) provides that any *product* that is not listed on the *WaterMark Schedule of Products* or the *WaterMark Schedule of Excluded Products* must be subjected to a risk assessment in accordance with the WaterMark Scheme Rules. The risk assessment will determine whether the *product* in question requires certification and authorisation, or if it should be listed as an "excluded product". This in turn will determine the form of evidence of suitability applicable to the *product*.

Explanatory Information: What is WaterMark?

The *WaterMark Certification Scheme* is a mandatory certification scheme for *plumbing* and *drainage products* to ensure that these *products* are fit for purpose and appropriately authorised for use in a *plumbing* or *drainage* system.

The PCA, through Part A5, requires certain *plumbing* and *drainage products* to be certified and authorised for use in a *plumbing* or *drainage* system. These products are certified through the *WaterMark Certification Scheme* and listed on the WaterMark Product Database.

The *WaterMark Certification Scheme* is governed by the WaterMark Scheme Rules, which are available for download from the ABCB website at: www.abcb.gov.au. These rules set out the requirements for risk assessments, evaluation, certification, and the drafting of WaterMark Technical Specifications.

When a *product* is listed on the *WaterMark Schedule of Products* then, for it to be certified and authorised, the *product* must—

- be tested by an *Accredited Testing Laboratory*; and
- comply with an approved *product* specification (either a relevant existing *product* Standard or a WaterMark Technical Specification); and
- be manufactured in accordance with an approved Quality Assurance Program; and
- carry a scope of use.

Products that comply fully with the applicable requirements of the *WaterMark Certification Scheme* are then eligible to be certified by a *WaterMark Conformity Assessment Body* and listed on the WaterMark Product Database. Certified *products* are identifiable by the WaterMark certification trade mark, shown in Figure A5G4 below, that must be displayed on the *product* upon granting of a *WaterMark Licence*.

Figure A5G4 (explanatory): WaterMark Certification Scheme Trademarks

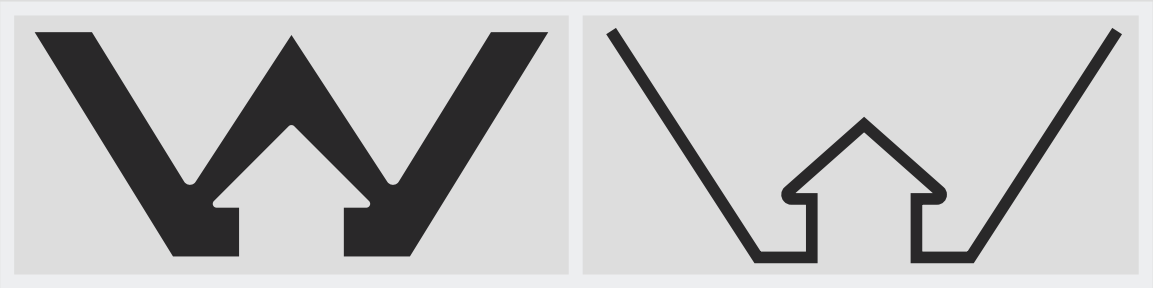

A5G5 Fire-resistance of building elements

[2019: A5.4]

Where a *Deemed-to-Satisfy Provision* requires a building element to have an FRL, it must be determined in accordance with Specifications 1 and 2.

A5G6 Fire hazard properties

[2019: A5.5]

Where a *Deemed-to-Satisfy Provision* requires a building component or assembly to have a *fire hazard property* it must be determined as follows:

(a) For *average specific extinction area*, *critical radiant flux* and *Flammability Index*, as defined in Specification 1.

(b) For *Smoke-Developed Index* and *Spread-of-Flame Index*, in accordance with Specification 3.

(c) For a material's *group number* or *smoke growth rate index* ($SMOGRA_{RC}$), in accordance with S7C4(2).

A5G7 Resistance to the incipient spread of fire

[2019: A5.6]

A ceiling is deemed to have a *resistance to the incipient spread of fire* to the space above itself if—

(a) it is identical with a prototype that has been submitted to the *Standard Fire Test* and the *resistance to the incipient spread of fire* achieved by the prototype is confirmed in a report from an *Accredited Testing Laboratory* that—

(i) describes the method and conditions of the test and form of construction of the tested prototype in full; and

(ii) certifies that the application of restraint to the prototype complies with the *Standard Fire Test*; or

(b) it differs in only a minor degree from a prototype tested under (a) and the *resistance to the incipient spread of fire* attributed to the ceiling is confirmed in a report from an *Accredited Testing Laboratory* that—

(i) certifies that the ceiling is capable of achieving the *resistance to the incipient spread of fire* despite the minor departures from the tested prototype; and

(ii) describes the materials, construction and conditions of restraint that are necessary to achieve the *resistance to the incipient spread of fire*.

A5G8 Labelling of Aluminium Composite Panels

[2019: A5.7]

An *Aluminium Composite Panel* must be labelled in accordance with SA TS 5344.

A5G9 NatHERS

[New for 2022]

Where *house energy rating software* is *required* to be used, evidence of the *house energy rating software* output must be in the form of a NatHERS certificate issued in accordance with the NatHERS scheme.

Part A6 Building classification

Introduction to this Part

The NCC groups buildings and structures by the purpose for which they are designed, constructed or adapted to be used, assigning each type of building or structure with a classification. This Part explains how each building classification is defined and used in the NCC.

The building classifications are labelled "Class 1" through to "Class 10". Some classifications also have sub-classifications, referred to by a letter after the number (e.g. Class 1a).

The technical building requirements for Class 2 to 9 buildings are mostly covered by Volume One of the NCC and those for Class 1 and 10 are mostly covered by Volume Two of the NCC. Volume Three of the NCC covers *plumbing* and *drainage* requirements for all building classifications.

A building may have parts that have been designed, constructed or adapted for different purposes. In most cases, each of these parts is a separate classification. A building (or part of a building) may also have more than one such purpose and may be assigned more than one classification.

Governing Requirements

A6G1 Determining a building classification

[2019: A6.0]

(1) The classification of a building or part of a building is determined by the purpose for which it is designed, constructed or adapted to be used.

(2) Each part of a building must be classified according to its purpose and comply with all the appropriate requirements for its classification.

(3) A room that contains a mechanical, thermal or electrical facility or the like that serves the building must have the same classification as the major part or principal use of the building or *fire compartment* in which it is situated.

(4) Unless another classification is more suitable, an *occupiable outdoor area* must have the same classification as the part of the building to which it is associated.

Exemptions

(1) For A6G1(1) where a part of a building has been designed, constructed or adapted for a different purpose and is less than 10% of the *floor area* of the *storey* it is situated on, the classification of the other part of the *storey* may apply to the whole *storey*.

(2) A6G1(3) does not apply to an *electricity network substation*.

Limitations

Exemption (1) does not apply where the minor use of a building is a laboratory, a Class 9b *early childhood centre*, or a Class 2, 3 or 4 part of a building.

Explanatory Information

Classification is a process for understanding risks in a building or part, according to its use. It must be correctly undertaken to achieve NCC aims as appropriate to each building in each circumstance.

It is possible for a single building to have parts with different classifications. Part of a building can also have more than one classification. Where there is any conflict between what requirements the part should comply with, the more stringent requirement applies.

Where it is unclear which classification should apply, *appropriate authorities* have the discretion to decide. They base their decision on an assessment of the building proposal.

They will look at what classification the building most closely resembles. They will also take into account the likely *fire load*, plus, the likely consequences of any risks to the safety, health and amenity of people using the building.

Appropriate authorities will also look at any relevant court decisions or determinations of the State or Territory body responsible for considering appeals on building classification matters.

It should be noted that appeals body determinations and, in some States and Territories, certain court decisions are usually not precedent creating. Such decisions are determined on a case-by-case basis.

It should also be noted that State and Territory authorities responsible for building regulatory matters may have issued advice, interpretations or guidelines to assist practitioners in applying the correct classification to a building or part. Advice on such matters should be sought from the relevant authority.

Under Exemption (1) to A6G1, if 10% or less of the *floor area* of a *storey* is used for a purpose which could be classified differently to the remainder of that *storey*, that part may be classified as being the same as the remainder. Laboratories, *sole-occupancy units* in Class 2, 3 or 4 parts, and Class 9b *early childhood centres* are excluded from this concession (see Limitation to A6G1). The reason is that laboratories are considered to have a high *fire hazard* potential and classifying them with the remainder of the building could, in a majority of cases, endanger occupants of the other parts of the building which have a lower *fire hazard* potential. In relation to Class 9b *early childhood centres*, the intent is to ensure that these facilities cannot be regarded as another class and that the specific fire safety requirements applicable to Class 9b *early childhood centres* are implemented. Also, the intent is not to allow *sole-occupancy units* in Class 2, 3 or 4 parts to be regarded as another Class such as Class 6 and then not have any fire or sound insulation between the units and any other classification which may have a high *fire load* and could endanger the occupants of the Class 2, 3 or 4 part.

If Exemption (1) to A6G1 is used, it should be remembered that it will still be necessary to use the occupant numbers in Volume One Table D2D18 for the particular use of the area. Likewise, the lighting and equipment levels, people occupancy and load profiles for the area of minor use for the purposes of Volume One Section J must be in accordance with the use of the area.

If the *storey* has a very large *floor area*, the 10% or less concession area may also be large, even though the rest of the building is classifiable as a building which ordinarily has a lower risk potential. An example of the application of this area concession could be as follows:

- If a single *storey* factory has an office that takes up 8% of the whole *storey's floor area*, the entire building (including the office) can be classified as being Class 8.
- However, if that office area takes up 12% of the *storey's floor area*, that area must be classified as Class 5, and the remainder of the building as Class 8.

Under A6G1(3) a plant room, machinery room, lift motor room or *boiler* room, have the same classification as the part of the building they are in. These kinds of rooms do not need to be ancillary or subordinate to the part of the building they are in, that is, the 10% criterion is not applicable.

There are specific provisions for these kinds of rooms. For example, Volume One Section C requires some of them to be fire separated from the remainder of the building (e.g. see C3D14 with regard to elements of the electricity supply system).

A6G2 Class 1 buildings

[2019: A6.1]

(1) A Class 1 building is a dwelling.

(2) Class 1 includes the following sub-classifications:

(a) Class 1a is one or more buildings, which together form a single dwelling including the following:

(i) A detached house.

(ii) One of a group of two or more attached dwellings, each being a building, separated by a *fire-resisting* wall, including a row house, terrace house, town house or villa unit.

(b) Class 1b is one or more buildings which together constitute—

(i) a boarding house, guest house, hostel or the like that—

(A) would ordinarily accommodate not more than 12 people; and

(B) have a total area of all floors not more than 300 m^2 (measured over the enclosing walls of the building or buildings); or

(ii) four or more single dwellings located on one allotment and used for short-term holiday accommodation.

Figure A6G2a: Identification of Class 1 buildings

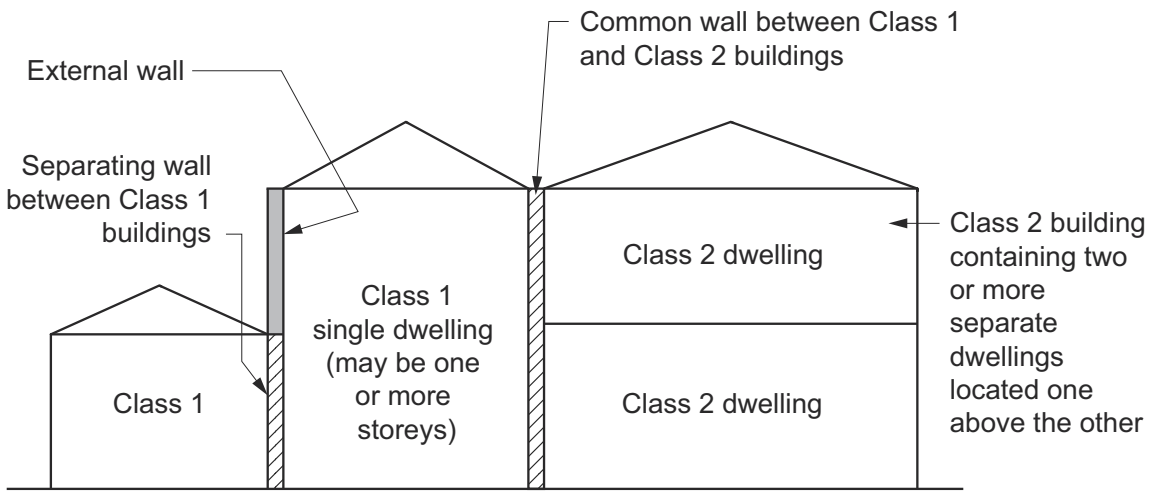

Elevation

Figure A6G2b: Typical Class 1 building configurations

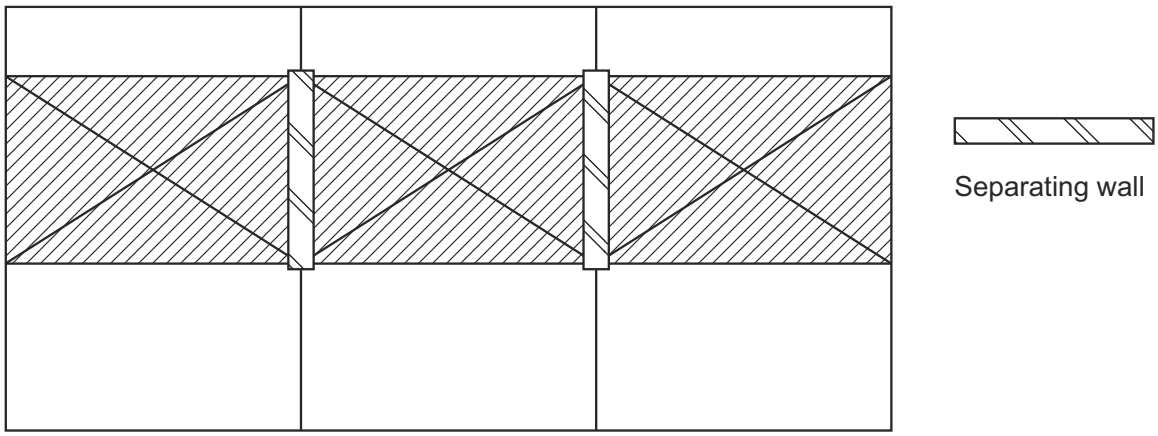

(a) 3 Class 1 buildings on 3 separate allotments

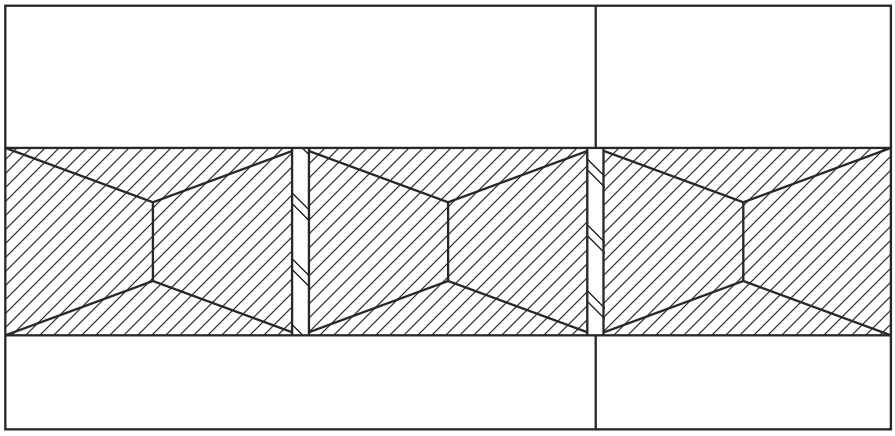

(b) 3 Class 1 buildings on 2 separate allotments

Plan view

Figure A6G2c: Domestic allotment — classification of buildings and structures

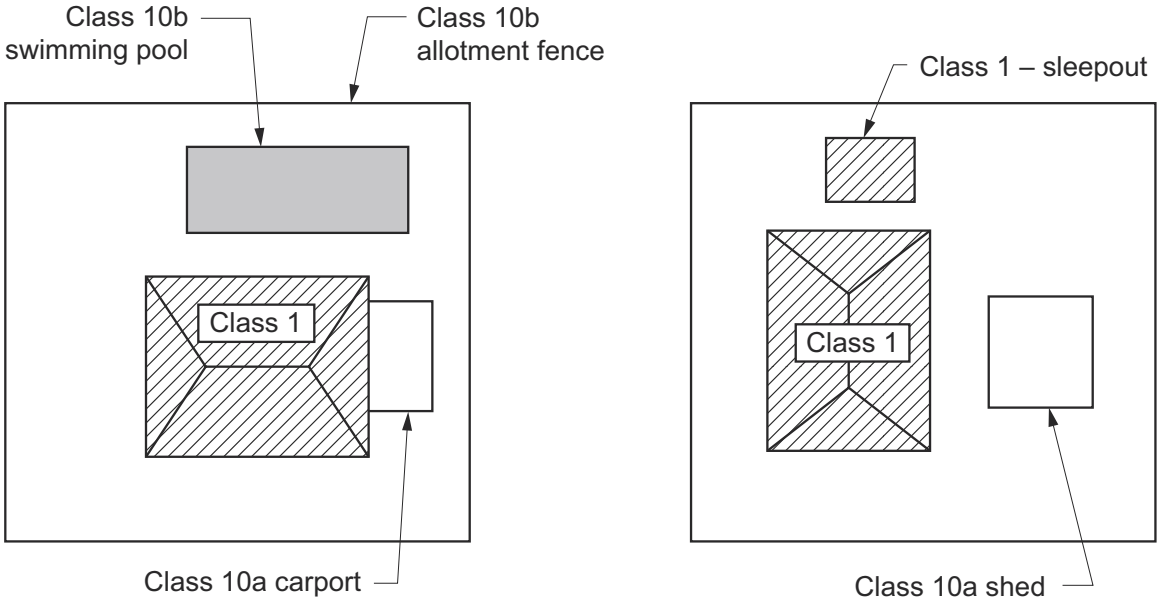

(a) Class 10 attached and Class 10b

(b) Class 1 part and Class 10 detatched

Plan view

Notes

Figures A6G2a, A6G2b and A6G2c illustrates requirements of this provision.

Limitations

For A6G2, a Class 1 building cannot be located above or below another dwelling or another class of building, other than a *private garage*.

Explanatory Information

Class 1 buildings are primarily covered in Volumes Two and Three of the NCC. Class 1 buildings are not located above or below another dwelling, or another class of building other than a *private garage*.

A *sole-occupancy unit* used for residential purposes located over another *sole-occupancy unit* used for residential purposes will always be a Class 2 or Class 3 building (depending on the circumstances). It cannot be a Class 1 building.

A single Class 1 dwelling can be made up of more than one building. For example, it may include what is ordinarily called a house, plus one or more habitable 'outbuildings' such as sleepouts. Note that a habitable building such as a sleepout cannot be classified as a Class 10 building.

The height or number of storeys of a Class 1 building makes no difference to its classification.

Class 1b buildings used for short-term holiday accommodation include cabins in caravan parks, tourist parks, farm stay, holiday resorts and similar tourist accommodation. This accommodation itself is typically rented out on a commercial basis for short periods and generally does not require the signing of a lease agreement. Short-term accommodation can also be provided in a boarding house, guest house, hostel, bed and breakfast accommodation or the like.

Unlike a Class 1b building described in A6G2(2)(a), a Class 1b building described in A6G2(2)(b) does not have any *floor area* limitation. Therefore, if 4 or more single dwellings are located on the one allotment and used for short-term holiday accommodation, each single dwelling would be classified as a Class 1b building regardless of the *floor area* of each dwelling or the combined *floor area* of all of the dwellings.

See also Volume One D4D2(3) which contains an explanation of what is considered to be "one allotment".

The Class 1b classification can attract concessions applicable to Class 3 buildings. These concessions allow people to rent out rooms in a house, or run a bed and breakfast, without having to comply with the more stringent Class 3 requirements. The reasoning is that the smaller size of the building and its lower number of occupants represents reduced fire risks.

Apart from their use, the primary difference between Class 1a and Class 1b buildings is that the latter is required to have a greater number of smoke alarms and in some circumstances, access and features for people with a disability.

A6G3 Class 2 buildings

[2019: A6.2]

(1) A Class 2 building is a building containing two or more *sole-occupancy units*.

(2) Each *sole-occupancy unit* in a Class 2 building must be a separate dwelling.

Explanatory Information

A Class 2 building is one that includes more than one dwelling, each of which is generally solely occupied by one or more people to the exclusion of others.

Such buildings must not be otherwise classified as a Class 1 or Class 3 building or Class 4 part. See Explanatory Figure A6G3a for a typical configuration of Class 1 and Class 2 buildings.

Where a sole-occupancy residential unit is located above another sole-occupancy residential unit, the building containing the units can be either a Class 2 or a Class 3 building, depending on the other circumstances of the building proposal.

Class 2 buildings can be single *storey* attached dwellings. Where there is any common space below such dwellings, they are Class 2 (and cannot be Class 1) irrespective of whether the space below is a *storey* or not (see Explanatory Figure A6G3b).

Class 2 buildings can be attached to buildings of another class. The attached Class 2 buildings need not be attached to one another, and need not be more than a single *storey*.

When two or more dwellings are attached to another class, they cannot be Class 4 parts, as any building can only contain one Class 4 dwelling.

Figure A6G3a (explanatory): Section showing a typical configuration of Class 1 and Class 2 buildings (with non-combustible roof coverings)

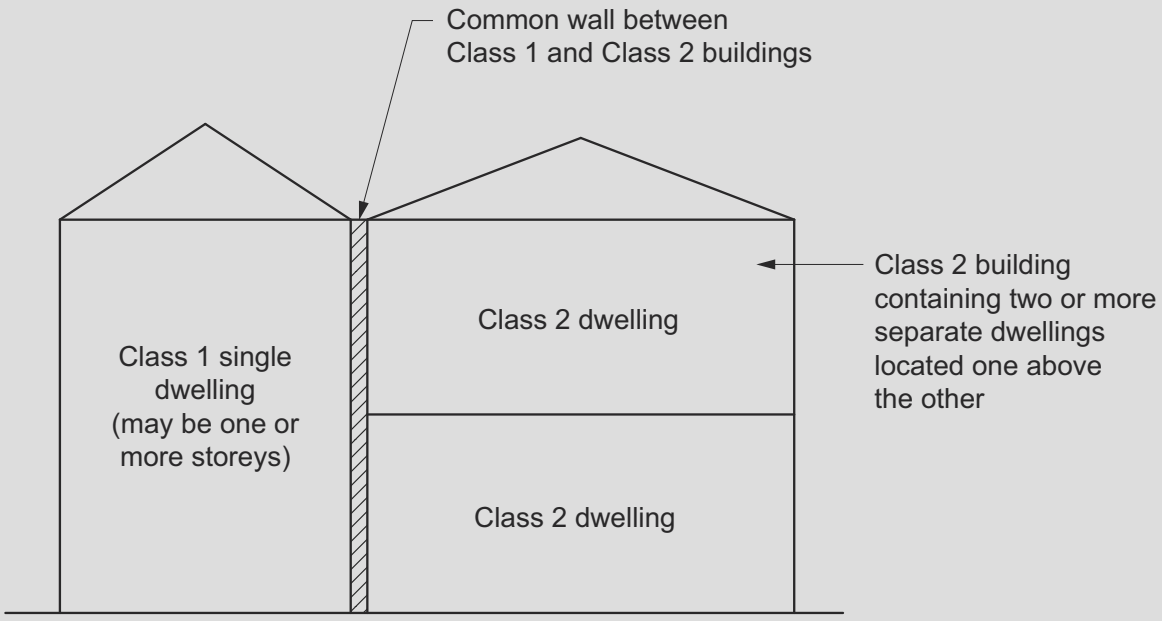

Elevation

Figure A6G3b (explanatory): Elevation showing a single storey of Class 2 with a common area below

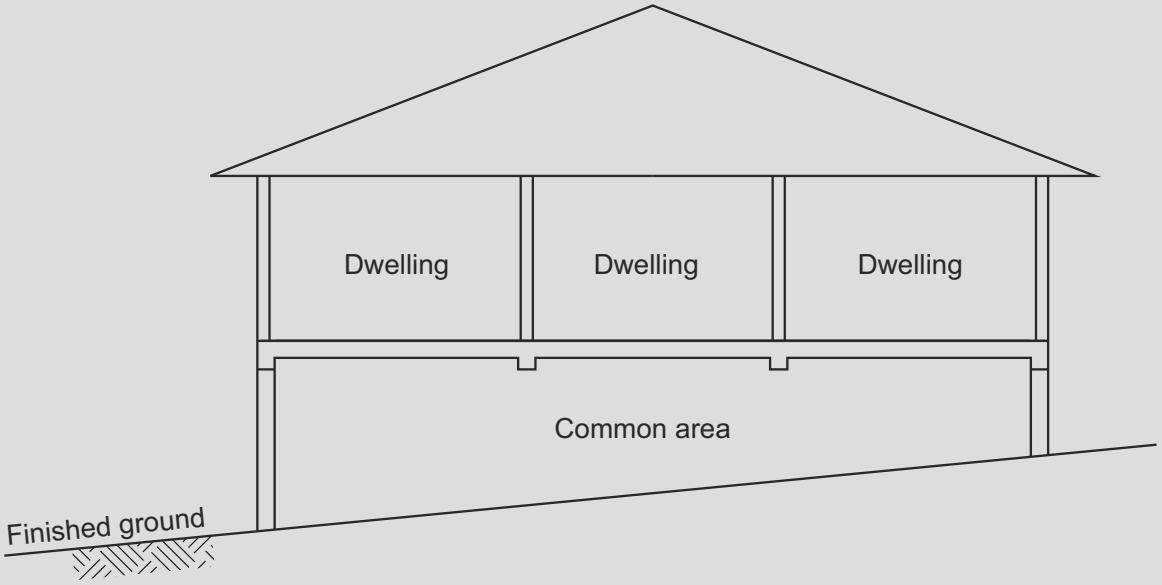

A6G4 Class 3 buildings

[2019: A6.3]

(1) A Class 3 building is a residential building providing long-term or transient accommodation for a number of unrelated persons.

(2) Class 3 buildings include the following:

(a) A boarding house, guest house, hostel, lodging house or backpacker accommodation.

(b) A residential part of a hotel or motel.

(c) A residential part of a *school*.

(d) Accommodation for the aged, children, or people with disability.

(e) A residential part of a *health-care building* which accommodates members of staff.

(f) A residential part of a *detention centre*.

(g) A *residential care building*.

Limitations

For A6G4, a Class 3 building is not a Class 1 or 2 building but may be a mixture of Class 3 and another class.

Explanatory Information

Class 3 buildings provide accommodation for unrelated people. The length of stay is unimportant.

Some exceptions to this classification include: certain bed and breakfast accommodation, boarding houses, guest houses, hostels, or lodging houses and the like which fall within the concession provided for Class 1b buildings.

Also, any sized building can be classified as Class 1 or Class 2 if it is used to house any number of unrelated people who jointly own or rent it, or share it on a non-rental basis with an owner or tenant.

It is not unusual for a manager's, owner's or caretaker's dwelling attached to a Class 3 building to be thought of as a Class 4 part of the Class 3 building. However, a Class 4 part of a building can only be part of a Class 5-9 building.

Accordingly, such dwellings are either classified as Class 1, Class 2 or Class 3, depending on the circumstances of the building proposal. However, a building could be a mixture of Class 3 and another class.

Class 3 buildings include—

- the residential parts of hotels and motels; and
- hotel or motel caretakers', managers' or owners' flats, noting that under certain circumstances such dwellings could

be Class 1, Class 2 or Class 3 buildings; and

- dormitory accommodation, in schools or elsewhere, noting that a dormitory is generally (but not always) considered to be a *sole-occupancy unit*; and
- bed and breakfast accommodation, a boarding house, guest house, hostel, or lodging house; and
- backpackers' accommodation; and
- a building which houses elderly people or other people who require special care (in some States or Territories it is not acceptable for a Class 1b building to be used to house elderly people or other people who require special care - it is recommended the local building regulatory body be consulted); and
- workers' quarters, including shearers' or fruit pickers' accommodation, or hotel workers' accommodation.

A6G5 Class 4 buildings

[2019: A6.4]

Class 4 is a dwelling in a Class 5, 6, 7, 8 or 9 building if it is the only dwelling in the building.

Explanatory Information

Class 4 classification applies to some types of accommodation located within a Class 5-9 building. The most common include a caretaker's flat within a building; and accommodation over or otherwise connected to a shop.

A Class 4 part cannot be located within a Class 1, Class 2 or Class 3 building. There can only be one Class 4 dwelling in a building. If there are two or more dwellings, they are Class 1, Class 2, or possibly Class 3. These Class 1, Class 2 or Class 3 parts need not be attached to one another, nor be more than a single *storey*.

Where a Class 4 part of a building is rented out for accommodation purposes, it retains its Class 4 classification. However, if any other part of the principal building is used for accommodation, for example, the attached shop is converted into an additional flat, both flats become classifiable as Class 2 or, depending on their use, possibly Class 3.

A6G6 Class 5 buildings

[2019: A6.5]

A Class 5 building is an office building used for professional or commercial purposes.

Explanatory Information

Class 5 buildings include professional chambers or suites, lawyers' offices, government offices, advertising agencies and accountants' offices.

NSW A6G7

SA A6G7

A6G7 Class 6 buildings

[2019: A6.6]

(1) A Class 6 building is a shop or other building used for the sale of goods by retail or the supply of services direct to the public.

(2) Class 6 buildings include the following:

(a) An eating room, cafe, restaurant, milk or soft-drink bar.

(b) A dining room, bar area that is not an *assembly building*, shop or kiosk part of a hotel or motel.

(c) A hairdresser's or barber's shop, public laundry, or undertaker's establishment.

(d) A supermarket or sale room, showroom, or *service station*.

Explanatory Information

A Class 6 building is a building where goods or services are directly sold or supplied to the public. Examples of a Class 6 building may include—

- a place where food or drink may be purchased such as a café or restaurant; or
- a dining room, bar area that is not an *assembly building*, shop or kiosk part of a hotel or motel; or
- a hairdresser's or barber's shop, public laundry, veterinarian; or
- supermarket or sale room, florist, showroom, or *service station*.

Service stations are Class 6 buildings. These are outlets used for the servicing of cars and the selling of fuel or other goods. The expression '*service station*' is not intended to cover buildings where panel beating, auto electrical, muffler replacement, tyre replacement and the like are solely carried out. Such buildings should be classified as Class 6, Class 7 or Class 8 buildings as the *appropriate authority* sees fit.

A6G8 Class 7 buildings

[2019: A6.7]

(1) A Class 7 building is a storage-type building.

(2) Class 7 includes the following sub-classifications:

(a) Class 7a — a *carpark*.

(b) Class 7b — a building that is used for storage, or display of goods or produce for sale by wholesale.

Explanatory Information

There are three basic types of Class 7 building. The first is a *carpark* as defined in the NCC. The second is a building used for storage, often referred to as a 'warehouse'. The third is a building used for the display of goods or produce for sale by wholesale. 'Wholesale' means sale to people in the trades or in the business of 'on-selling' goods and services to another party (including the public).

A6G9 Class 8 buildings

[2019: A6.8]

(1) A Class 8 building is a process-type building.

(2) Class 8 buildings include the following:

(a) A laboratory.

(b) A building in which the production, assembling, altering, repairing, packing, finishing, or cleaning of goods or produce for sale takes place.

Explanatory Information

The most common way to describe a Class 8 building is as a 'factory'. However, this can give a simplistic impression of the types of building which can fall within this classification.

For example—

- some laboratories, despite their often small size, have been included as Class 8 buildings principally because of their high *fire hazard*; and
- buildings used for altering or repairing (except *service stations*, which are specifically included in A6G7 as Class 6 buildings); and
- potteries; and
- food manufacturers (but not restaurants, which are specifically included in A6G7 as Class 6 buildings); and
- buildings used for the packing or processing of produce, such as a farm or horticultural building.

A6G10 Class 9 buildings

[2019: A6.9]

(1) A Class 9 building is a building of a public nature.

(2) Class 9 includes the following sub-classifications:

(a) Class 9a — a *health-care building* including any parts of the building set aside as laboratories, and includes a *health-care building* used as a *residential care building*.

(b) Class 9b — an *assembly building* including a trade workshop or laboratory in a primary or secondary *school*.

(c) Class 9c — a *residential care building*.

Exemptions

A6G10(2)(b) excludes any parts of the building that are of another Class.

Explanatory Information

Class 9a buildings are *health-care buildings*, including day-care surgeries or procedure units and the like. See definition of *health-care building*. Laboratories that are part of a Class 9a building are Class 9a, despite the general classification of laboratories as Class 8 buildings.

Class 9b buildings are *assembly buildings*.

These buildings can include—

- theatres, cinemas and halls, churches, schools, early childhood centres, kindergartens, preschools and child-minding centres; and
- indoor cricket, tennis, basketball centres and sport stadiums; and
- nightclubs, discotheques, bar areas providing live entertainment and/or containing a dance floor, public halls, dance halls and other places of entertainment; and
- snooker halls; and
- bus and railway stations.

Regarding the Exemption to A6G10(2)(b), a building could be a mixture of Class 9b and another class, or a Class 9b building could contain parts that are of another class, but be taken as a Class 9b building because of Exemption (1) to A6G1.

Class 9c buildings are *residential care buildings* that may contain residents who have various care level needs.

The Class 9c classification recognises that many residents progress through a continuum of care needs from low to high. Many older people enter residential care with low care needs (typically Class 3 facilities) but, as they age, require higher levels of care. In the past, such progression often necessitated the transfer of a hostel resident (Class 3) to a nursing home (Class 9a). This frequently had negative consequences for the health and well-being of the resident, for whom the hostel accommodation was home. It also led, at times, to the separation of couples with differing care needs.

Building designers should note that Class 3 buildings include hostels for the accommodation of the aged, and Class 9a buildings include nursing homes. It is important to be aware, however, that construction of Class 3 or 9a buildings may restrict the options available to the operators of a facility in relation to the profile of the residents they wish to accommodate. Where the potential exists for residents of varying care needs to be accommodated, consideration of the Class 9c provisions may be appropriate. The Class 9c classification allows for any mix of low and high care residents and is intended to allow the mix to change as the residents' care needs change over time, without the need to obtain any further consent or approval from the *appropriate authority*.

Multi-care level facilities are for residents who may require the full range of care services outlined by the Aged Care Act. Hence, it is not intended to restrict the resident type and provides maximum flexibility for service providers, residents and the community.

The NCC provisions for Class 9c buildings are based on minimal on duty on-site staff being available at any time. However, it is recognised that the staff numbers vary throughout the course of any one day, due to the care needs of the residents and the functioning of the facility. It is also recognised that the specific care needs of the residents may result in a greater minimum number of staff.

A6G11 Class 10 buildings and structures

[2019: A6.10]

(1) A Class 10 building is a non-habitable building or structure.

(2) Class 10 includes the following sub-classifications:

(a) Class 10a is a non-habitable building including a *private garage*, carport, shed or the like.

(b) Class 10b is a structure that is a fence, mast, antenna, retaining wall or free-standing wall or *swimming pool* or the like.

(c) Class 10c is a *private bushfire shelter*.

Explanatory Information

Class 10a buildings are non-habitable buildings. See Explanatory Figure A6G11 for an indication of some Class 10 building configurations.

Class 10b structures are non-habitable structures. There is no requirement for Class 10 buildings to be appurtenant to a building of any other Class, for example, a small shed standing on its own on an allotment and a toilet block in a park.

A habitable 'outbuilding' which is appurtenant to another building is generally part of that building. Again, habitable 'outbuildings' cannot be classified as Class 10 buildings.

Typical outbuilding classifications include the following:

- A sleepout on the same allotment as a Class 1 building is part of the Class 1 building.
- A detached entertainment room on the same allotment as a Class 1 building, perhaps associated with a *swimming pool*, is part of the Class 1 building.
- A small toolshed, used for trade-related hobbies for non-commercial purposes or home repairs, on the same allotment as a Class 1 building, would be classified as a Class 10 building.

Provisions relating to Class 10c structures are only intended to address *private bushfire shelters* associated with a single Class 1a dwelling. These provisions are contained in Volume Two of the NCC.

Some States or Territories may exempt some Class 10 buildings or structures (often on the basis of height or size) from the need to have a building permit. Queries on this matter should be referred to the State or Territory body responsible for regulatory matters.

Figure A6G11 (explanatory): Examples of Class 10 buildings and structures

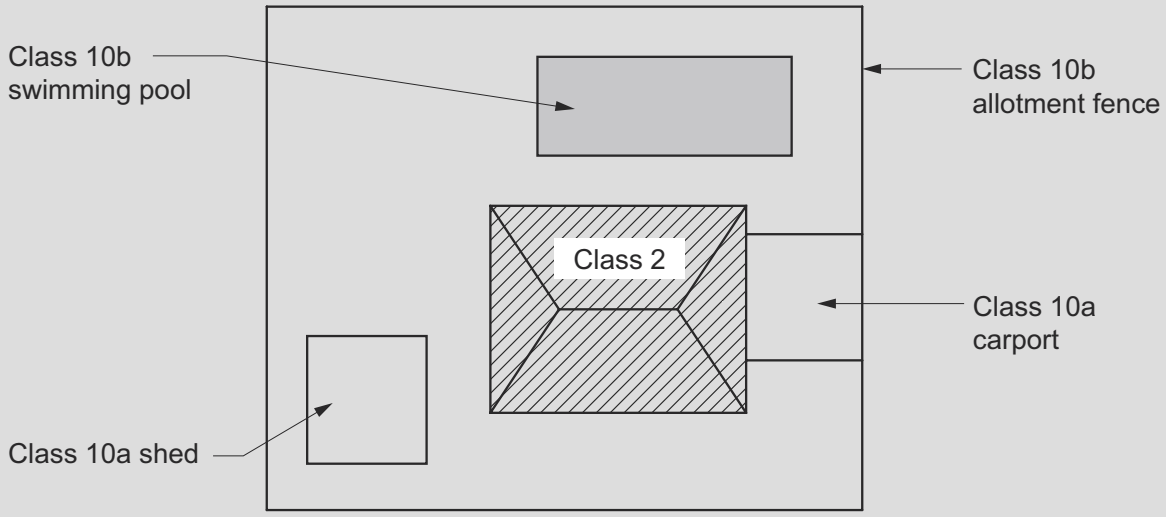

Plan view

A6G12 Multiple classifications

[2019: A6.11]

A building (or part of a building) may be designed, constructed or adapted for multiple purposes and have more than one classification.

Applications

For A6G12, a building (or part of a building) must comply with all the relevant requirements that apply to each of the classifications for that building (or part of a building).

Explanatory Information: Difficult classifications — Class 2 or Class 3?

There is a fine line between a Class 2 building containing apartments or flats and a Class 3 motel building with units containing bathroom, laundry and cooking facilities, which may both be made available for short term holiday rental. When does a Class 3 motel unit become a Class 2 holiday flat and vice versa?

In general, an assessment will be based on the most likely use of the building by *appropriate authorities*.

Class 3 buildings, where the occupants are generally unfamiliar with the building and have minimum control over the safety of the building, represent a higher risk level and therefore require higher safety levels. In a case where the classification is unclear, a decision should be made according to the perceived risks inherent in the use of the building.

Explanatory Information: Difficult classifications — Class 6 or Class 7?

Class 7 buildings include those used to sell goods on the wholesale market, whereas Class 6 buildings are used to sell goods to the public.

Some establishments claim to sell goods to both the wholesale and retail markets. As a rule, however, if the general public has access to the building, it is considered a 'shop', and therefore a Class 6 building.

Explanatory Information: Difficult classifications — Hotel bars: Class 6 or 9b?

As can be seen from the definition of a Class 6 building, it includes a hotel bar which is not an *assembly building*. The bar includes the bar area and associated standing and seating areas. This clarifies that the bar extends beyond the serving area to include standing and sitting areas where patrons may drink alcohol or other beverages and consume food. The exclusion of an *assembly building* means that a bar providing live entertainment or containing a dance floor is not considered to be Class 6; it must be considered as Class 9b. However, when that use is minor compared with the remainder of the bar, such as a piano bar or the like where patrons only listen to music and there is no dance floor, the *appropriate authority* should exercise judgement on the predominant use and therefore the appropriate classification of the bar.

A Class 9b building is an *assembly building* which is defined to include a building where people may assemble for entertainment, recreational or sporting purposes.

A building may have more than one classification (see A6G12).

Explanatory Information: Buildings used for farming purposes

Buildings used for farming-type purposes are often very diverse in nature, occupancy, use and size. In some States or Territories, *appropriate authorities* may classify farm buildings as Class 10a, which covers non-habitable buildings. They would only make this decision if a classification of Class 7 or Class 8 would not be more appropriate.

When making their decision they consider the building's size, purpose, operations and the extent to which people are employed in the building. For example, it may be appropriate to classify a shed which is used to store a tractor as a Class 10a building.

The NCC has definitions of *farm building* and *farm shed* which are certain Class 7 and 8 buildings used for farming purposes. Concessions to specific *Deemed-to-Satisfy Provisions* apply to *farm buildings* and *farm sheds* in recognition of their often low risk features, and it is recommended that reference is made to the definitions of *farm building* and *farm shed* for further guidance which may assist determination of an appropriate NCC classification.

For example, if people are likely to be employed to stack materials/produce in a storage building or remove materials/produce from a storage building then a classification of Class 7b may be appropriate. Depending upon whether

the criteria in the definition of *farm shed* or *farm building* have been met, the associated *Deemed-to-Satisfy Provisions* in NCC Volume One Part I3 may apply.

Similarly if people are likely to be employed to pack or process materials/produce within a building, or employed to feed, clean or collect produce from animals or plants within a building then a classification of Class 8 may be appropriate. Depending upon whether the criteria in the definition of *farm shed* or *farm building* have been met, the associated *Deemed-to-Satisfy Provisions* in NCC Volume One Part I3 may apply.

However identification of low *fire load*, low occupant risk and low risk of fire spread should not be used as justification for choosing a less stringent building classification for a building under the *Deemed-to-Satisfy Provisions*. For example, if the intended use of a building is to grow or store a large amount of tomatoes, such as a large greenhouse, and there is likely to be only one to two persons in the building at any time, it is considered inappropriate to classify the building as a Class 10a under the *Deemed-to-Satisfy Provisions* and a classification of Class 7 or Class 8 would be more appropriate.

The *Deemed-to-Satisfy Provisions* for a Class 7 or Class 8 *farm building* or *farm shed* do not prevent the ability to consider or develop a *Performance Solution* for a particular building where the requirements may not be considered appropriate or are viewed as too stringent. Similarly if a Class 7 or 8 building used for farming purposes does not meet all the criteria to be considered a *farm building* or *farm shed* under the *Deemed-to-Satisfy Provisions*, this would not limit the ability to develop a *Performance Solution* which could contain features similar to those allowed under the *Deemed-to-Satisfy Provisions* for *farm buildings* or *farm sheds*.

For example, if a Class 8 commercial poultry building meets all the criteria to be considered a farm building under the *Deemed-to-Satisfy Provisions* other than the maximum *floor area* criteria, a *Performance Solution* could be developed to demonstrate that the concessions for a farm building under the *Deemed-to-Satisfy Provisions* are appropriate.

In regards to a *farm building* or *farm shed* where the purpose of the building is to park farm vehicles when not in use, as well as perhaps clean or polish the vehicle(s), it may be appropriate that this type of building is classified as a Class 7a.

However, a number of *farm buildings* and *farm sheds* are often not only used for the storage of farm vehicles, but to store supplies such as fuel, grain or hay. A Class 7a classification may still be appropriate where the majority of the shed's space is intended to be designated for the parking of vehicles. However, it may be more appropriate to classify some types of buildings as Class 7b, rather than Class 7a where a mixed use shed is intended.

Under A6G12 each part of a building (including the entire building) may have more than one classification. This means, for example, that it is permissible to classify part of a building as a Class 6/7 building, or a Class 5/6 building, or whatever is appropriate.

It is expected that this approach may be taken by a builder who is uncertain of what the precise use of a building will be after its sale, or to maximise the flexibility of the building's use.

Under the Application to A6G12, where a building has more than one classification the more stringent Class requirements will apply.

Part A7 United buildings

Introduction to this Part

This Part explains how multiple buildings can be considered as a united building. Where adjacent buildings are joined through openings in walls, they need not meet additional requirements if they jointly comply with the NCC as a single building.

Governing Requirements

A7G1 United buildings

[2019: A7.0]

Buildings are deemed united when two or more buildings adjoining each other are connected and used as one building.

Applications

(1) For A7G1, two or more buildings are a united building if they are connected through openings in the walls dividing them and together comply with all the requirements of the NCC as though they are a single building.

(2) A7G1 only applies to Class 2 to 9 buildings.

A7G2 Alterations in a united building

[2019: A7.1]

If, after *alterations* or any other building work, two or more of the buildings in A7G1 cease to be connected through openings in the dividing walls, each of those buildings not now connected must comply with all the requirements for a single building.

Explanatory Information

It is not unusual for authorities to receive plans proposing the connecting of two or more buildings. Connecting buildings could be achieved by breaking openings through walls, or by joining the buildings by a tunnel, bridge or covered walkway.

When connected, if the buildings jointly comply with all the requirements of the NCC applying as if they were a single building, they become a united building.

United buildings are not *required* to comply with additional NCC provisions. For example, any new openings do not require any form of fire protection not *required* of a single building.

Note, however, an *external wall*, which as a result of an interconnection becomes an *internal wall*, must comply with the requirements for an *internal wall*.

Interconnected buildings that do not jointly comply with all the requirements applicable to a single building, remain as separate buildings.

This raises the possible need for fire doors, or other forms of protection to be fitted to connecting openings.

Explanatory Information: Multiple allotments or ownership

The NCC does not concern itself with actually prohibiting or permitting the uniting of buildings in separate ownership or on separate allotments. Such matters are dealt with by the relevant local bodies.

Explanatory Information: Example of connection by bridge

In this example, Building A is connected to Building B by bridge C. There are four different options for designing such a proposal.

The first is a united building:

A, B and C are considered as a single structure and comply with the NCC.

The second is three separate buildings:

A, B and C are a fire-source feature to each of the others, and are separated by fire walls with the openings protected at the points of connection. In this case, C may require independent support and separate egress to a road or open space, that is not through Buildings A or B. In this case, attention should also be paid to the length of the bridge, as regards distance of travel to an *exit*.

The third option is the bridge as a portion of Building A:

In this option, A and C are one building, meeting all requirements of the NCC as a single or united building. B is a separate building, with suitable fire separation, including fire-doors at the point of interconnection. Bridge C could be supported off Building A, but not off Building B.

The fourth option is having the bridge as a portion of Building B:

In this option, B and C are one building, meeting all requirements of the NCC as a single or united building. A is a separate building, with suitable fire separation, including fire doors at the point of interconnection. Bridge C could be supported off Building B, but not off Building A.

In some cases, C will link A and B across a public road, including laneways and the like. Special approvals may be required from various *appropriate authorities*. However, in such cases—

- if C is supported by means other than off A and B, such support will generally only be permitted if there is no obstruction of the public road; and
- care will need to be taken in calculating the distance of travel to an *exit* if travel is required to be over C and the road is wide; and
- fire-separation may be necessary at each end of the bridge.

If the last stipulation is the case, the following matters need consideration:

- The bridge would probably need to be of fire-rated construction because *combustible* construction could provide a ready path for the transfer of fire, and *non-combustible* construction could, in a major fire, distort and collapse onto the road.
- The designer needs to take care that the bridge does not negate the fire separation between the *storeys* of the building.

Specification 1 Fire-resistance of building elements

S1C1 Scope

[2019: Sch. 5: 1]

This Specification sets out the procedures for determining the FRL of building elements.

S1C2 Rating

[2019: Sch. 5: 2]

A building element meets the requirements of this Specification if—

(a) it is listed in, and complies with Tables S1C2a, S1C2b, S1C2c, S1C2d, S1C2e, S1C2f, S1C2g, S1C2h, S1C2i, S1C2j, S1C2k, S1C2l, S1C2m or S1C2n of this Specification as applicable; or

(b) it is identical with a prototype that has been submitted to the *Standard Fire Test*, or an equivalent or more severe test, and the FRL achieved by the prototype without the assistance of an active fire suppression system is confirmed in a report from an *Accredited Testing Laboratory* which—

(i) describes the method and conditions of the test and the form of construction of the tested prototype in full; and

(ii) certifies that the application of restraint to the prototype complied with the *Standard Fire Test*; or

(c) it differs in only a minor degree from a prototype tested under (b) and the FRL attributed to the building element is confirmed in a report from an *Accredited Testing Laboratory* which—

(i) certifies that the building element is capable of achieving the FRL despite the minor departures from the tested prototype; and

(ii) describes the materials, construction and conditions of restraint which are necessary to achieve the FRL; or

(d) it is designed to achieve the FRL in accordance with—

(i) AS/NZS 2327, AS 4100 and AS/NZS 4600 if it is a steel or composite structure; or

(ii) AS 3600 if it is a concrete structure; or

(iii) AS 1720.4 if it is a timber element other than *fire-protected timber*; or

(iv) AS 3700 if it is a masonry structure; or

(e) the FRL is determined by calculation based on the performance of a prototype in the *Standard Fire Test* and confirmed in a report in accordance with S1C3; or

(f) for *fire-protected timber*, it complies with Specification 10 where applicable.

Table S1C2a: FRLs deemed to be achieved by walls — masonry

Masonry type	Minimum thickness (mm) of principal material for FRLs				
	60/60/60	90/90/90	120/120/120	180/180/180	240/240/240
Ashlar	-	-	-	-	300
Calcium silicate	See clause S1C2(d)(iv)				
Concrete					
Fired clay					

Table Notes

For the purposes of this table, each element must meet the requirements of Specification 2.

Table S1C2b: FRLs deemed to be achieved by walls — concrete

Concrete type	Minimum thickness (mm) of principal material for FRLs				
	60/60/60	90/90/90	120/120/120	180/180/180	240/240/240
No fines	-	-	-	150	300
Prestressed	See clause S1C2(d)(iv)				
Reinforced					
Plain	-	-	-	150	170

Table Notes

For the purposes of this table, each element must meet the requirements of Specification 2.

Table S1C2c: FRLs deemed to be achieved by walls — gypsum

Gypsum type	Minimum thickness (mm) of principal material for FRLs				
	60/60/60	90/90/90	120/120/120	180/180/180	240/240/240
Solid gypsum blocks	75	90	100	110	125
Gypsum — perlite or gypsum vermiculite-plaster on metal lath and channel (non-*loadbearing* walls only)	50	50	65	-	-

Table Notes

For the purposes of this table, each element must meet the requirements of Specification 2.

Table S1C2d: FRLs deemed to be achieved by concrete columns

Column type	Minimum thickness (mm) of principal material for FRLs				
	60/60/60	90/90/90	120/120/120	180/180/180	240/240/240
Prestressed	See clause S1C2(d)(ii)				
Reinforced					

Table S1C2e: FRLs deemed to be achieved by hot-rolled steel columns (including a fabricated column) exposed on not more than 3 sides

Fire protection	Minimum thickness (mm) of principal material for FRLs				
	60/60/60	90/90/90	120/120/120	180/180/180	240/240/240
Concrete cast in-situ — *loadbearing*	25	30	40	55	75
Concrete cast in-situ — non-*loadbearing* unplastered	25	30	40	50	75
Concrete cast in-situ — non-*loadbearing* plastered 13 mm	25	25	30	40	50
Gypsum cast in-situ	-	-	-	-	50
Gypsum — perlite or gypsum-vermiculite plaster—sprayed to contour	20	25	35	50	55

Fire protection	Minimum thickness (mm) of principal material for FRLs				
	60/60/60	90/90/90	120/120/120	180/180/180	240/240/240
Gypsum — perlite or gypsum-vermiculite plaster—sprayed on metal lath	20	20	25	35	45

Table Notes

For the purposes of this table, each element must meet the requirements of Specification 2.

Table S1C2f: FRLs deemed to be achieved by hot-rolled steel columns (including a fabricated column) exposed on no more than 3 sides and with column spaces filled

Fire protection	Minimum thickness (mm) of principal material for FRLs				
	60/60/60	90/90/90	120/120/120	180/180/180	240/240/240
Solid calcium-silicate masonry	50	50	50	50	65
Solid clay masonry	50	50	50	65	90
Solid concrete masonry	50	50	50	65	90
Solid gypsum blocks	50	50	50	50	65
Hollow terracotta blocks — plastered 13 mm	50	50	50	65	90

Table Notes

For the purposes of this table, each element must meet the requirements of Specification 2.

Table S1C2g: FRLs deemed to be achieved by hot-rolled steel columns (including a fabricated column) exposed on no more than 3 sides and with column spaces unfilled

Fire protection	Minimum thickness (mm) of principal material for FRLs				
	60/60/60	90/90/90	120/120/120	180/180/180	240/240/240
Solid calcium-silicate masonry	50	50	50	-	-
Solid clay masonry	50	50	65	-	-
Solid concrete masonry	50	50	65	-	-
Solid gypsum blocks	50	50	50	-	-
Hollow terracotta blocks — plastered 13 mm	50	50	65	-	-

Table Notes

For the purposes of this table, each element must meet the requirements of Specification 2.

Table S1C2h: FRLs deemed to be achieved by hot-rolled steel columns (including a fabricated column) exposed on no more than 4 sides

Fire protection	Minimum thickness (mm) of principal material for FRLs				
	60/–/–	90/–/–	120/–/–	180/–/–	240/–/–
Concrete cast in-situ — *loadbearing*	25	40	45	65	90
Concrete cast in-situ — non-*loadbearing* unplastered	35	30	40	50	65
Concrete cast in-situ — non-*loadbearing* plastered 13 mm	25	25	30	40	50
Gypsum cast in-situ	-	-	-	-	50

Fire protection	Minimum thickness (mm) of principal material for FRLs				
	60/–/–	90/–/–	120/–/–	180/–/–	240/–/–
Gypsum — perlite or gypsum-vermiculite plaster — sprayed to contour	25	30	40	55	65
Gypsum — perlite or gypsum-vermiculite plaster — sprayed on metal lath	20	20	30	40	50

Table Notes

For the purposes of this table, each element must meet the requirements of Specification 2.

Table S1C2i: FRLs deemed to be achieved by hot-rolled steel columns (including a fabricated column) exposed on no more than 4 sides and with column spaces filled

Fire protection	Minimum thickness (mm) of principal material for FRLs				
	60/–/–	90/–/–	120/–/–	180/–/–	240/–/–
Solid calcium-silicate masonry	50	50	50	65	75
Solid clay masonry	50	50	50	75	100
Solid concrete masonry	50	50	50	75	100
Solid gypsum blocks	50	50	50	65	75
Hollow terracotta blocks — plastered 13 mm	50	50	50	75	100

Table Notes

For the purposes of this table, each element must meet the requirements of Specification 2.

Table S1C2j: FRLs deemed to be achieved by hot-rolled steel columns (including a fabricated column) exposed on no more than 4 sides and with column spaces unfilled

Fire protection	Minimum thickness (mm) of principal material for FRLs				
	60/–/–	90/–/–	120/–/–	180/–/–	240/–/–
Solid calcium-silicate masonry	50	50	50	-	-
Solid clay masonry	50	50	65	-	-
Solid concrete masonry	50	50	65	-	-
Solid gypsum blocks	50	50	50	-	-
Hollow terracotta blocks — plastered 13 mm	50	50	65	-	-

Table Notes

For the purposes of this table, each element must meet the requirements of Specification 2.

Table S1C2k: FRLs deemed to be achieved by concrete beams

Concrete type	Minimum thickness (mm) of principal material for FRLs				
	60/–/–	90/–/–	120/–/–	180/–/–	240/–/–
Prestressed	See clause S1C2(d)(ii)				
Reinforced					

Table S1C2l: FRLs deemed to be achieved by hot-rolled steel beams (including an open-web joist, girder, truss, etc.) exposed on no more than 3 sides

Fire protection	Minimum thickness (mm) of principal material for FRLs				
	60/–/–	90/–/–	120/–/–	180/–/–	240/–/–
Concrete — cast in-situ	25	30	40	50	65

Fire protection	Minimum thickness (mm) of principal material for FRLs				
	60/–/–	90/–/–	120/–/–	180/–/–	240/–/–
Gypsum — perlite or gypsum-vermiculite plaster — sprayed to contour	20	25	35	50	55
Gypsum — perlite or gypsum-vermiculite plaster — sprayed on metal lath	20	20	25	35	45

Table Notes

For the purposes of this table, each element must meet the requirements of Specification 2.

Table S1C2m: FRLs deemed to be achieved by hot-rolled steel beams (including an open-web joist, girder, truss, etc.) exposed on 4 sides

Fire protection	Minimum thickness (mm) of principal material for FRLs				
	60/–/–	90/–/–	120/–/–	180/–/–	240/–/–
Concrete — cast in-situ	25	40	45	60	90
Gypsum — perlite or gypsum-vermiculite plaster — sprayed to contour	20	30	40	55	65
Gypsum — perlite or gypsum-vermiculite plaster — sprayed on metal lath	20	20	35	40	50

Table Notes

For the purposes of this table, each element must meet the requirements of Specification 2.

Table S1C2n: FRLs deemed to be achieved by floor, roof or ceiling

Floor, roof or ceiling type	Minimum thickness (mm) of principal material for FRLs				
	60/60/60	90/90/90	120/120/120	180/180/180	240/240/240
Prestressed	See clause S1C2(d)(ii)				
Reinforced					

S1C3 FRLs determined by calculation

[2019: Sch. 5: 3]

If the FRL of a building element is determined by calculation based on a tested prototype—

(a) the building element may vary from the prototype in relation to—

(i) length and height if it is a wall; and

(ii) height if it is a column; and

(iii) span if it is a floor, roof or beam; and

(iv) conditions of support; and

(v) to a minor degree, cross-section and components; and

(b) the report must demonstrate by calculation that the building element would achieve the FRL if it is subjected to the regime of the *Standard Fire Test* in relation to—

(i) *structural adequacy* (including deflection); and

(ii) *integrity*; and

(iii) *insulation*; and

(c) the calculations must take into account—

(i) the temperature reached by the components of the prototype and their effects on strength and modulus of elasticity; and

(ii) appropriate features of the building element such as support, restraint, cross-sectional shape, length, height, span, slenderness ratio, reinforcement, ratio of surface area to mass per unit length, and fire protection; and

(iii) features of the prototype that influenced its performance in the *Standard Fire Test* although these features may not have been taken into account in the design for dead and live load; and

(iv) features of the conditions of test, the manner of support and the position of the prototype during the test, that might not be reproduced in the building element if it is exposed to fire; and

(v) the design load of the building element in comparison with the tested prototype.

S1C4 Interchangeable materials

[2019: Sch. 5: 4]

(1) Concrete and plaster — An FRL achieved with any material of Group A, B, C, D or E as an ingredient in concrete or plaster, applies equally when any other material of the same group is used in the same proportions:

(a) Group A: any portland cement.

(b) Group B: any lime.

(c) Group C: any dense sand.

(d) Group D: any dense calcareous aggregate, including any limestone or any calcareous gravel.

(e) Group E: any dense siliceous aggregate, including any basalt, diorite, dolerite, granite, granodiorite or trachyte.

(2) Perlite and vermiculite — An FRL achieved with either gypsum-perlite plaster or gypsum-vermiculite plaster applies equally for each plaster.

S1C5 Columns covered with lightweight construction

[2019: Sch. 5: 5]

If the *fire-resisting* covering of a steel column is *lightweight construction*, the construction must comply with Volume One C2D9 and C4D17.

S1C6 Non-loadbearing elements

[2019: Sch. 5: 6]

If a non-*loadbearing* element is able to be used for a purpose where the *Deemed-to-Satisfy Provisions* prescribe an FRL for *structural adequacy*, *integrity* and *insulation*, that non-*loadbearing* element need not comply with the *structural adequacy* criteria.

Specification 2 Descriptions of elements referred to in Specification 1

S2C1 Scope

[New for 2022]

This Specification sets out the descriptions of elements referred to in Tables S1C2a, S1C2b, S1C2c, S1C2e, S1C2f, S1C2g, S1C2h, S1C2i, S1C2j, S1C2l and S1C2m of Specification 1.

S2C2 Mortar for masonry

[2019: Sch. 5 (Annex): 1.1]

Masonry units of ashlar, calcium silicate, concrete or fired clay (including terracotta blocks) must be laid in cement mortar or composition mortar complying with the relevant provisions of AS 3700.

S2C3 Gypsum blocks

[2019: Sch. 5 (Annex): 1.2]

Gypsum blocks must be laid in gypsum-sand mortar or lime mortar.

S2C4 Gypsum-sand mortar and plaster

[2019: Sch. 5 (Annex): 1.3]

Gypsum-sand mortar and gypsum-sand plaster must consist of either—

(a) not more than 3 parts by volume of sand to 1 part by volume of gypsum; or

(b) if lime putty is added, not more than 2.5 parts by volume of sand to 1 part by volume of gypsum and not more than 5% of lime putty by volume of the mixed ingredients.

S2C5 Gypsum-perlite and gypsum-vermiculite plaster

[2019: Sch. 5 (Annex): 1.4]

Gypsum-perlite or gypsum-vermiculite plaster must be applied—

(a) in either one or 2 coats each in the proportions of 1 m^3 of perlite or vermiculite to 640 kg of gypsum if the *required* thickness of the plaster is not more than 25 mm; and

(b) in 2 coats if the *required* thickness is more than 25 mm, the first in the proportions of 1 m^3 of perlite or vermiculite to 800 kg of gypsum and the second in the proportions of 1 m^3 of perlite or vermiculite to 530 kg of gypsum.

S2C6 Plaster of cement and sand or cement, lime and sand

[2019: Sch. 5 (Annex): 1.5]

Plaster prescribed in Tables S1C2c, S1C2e, S1C2f, S1C2g, S1C2h, S1C2i, S1C2j, S1C2l and S1C2m—

(a) must consist of cement and sand or cement, lime and sand; and

(b) may be finished with gypsum, gypsum-sand, gypsum-perlite or gypsum-vermiculite plaster or with lime putty.

S2C7 Plaster reinforcement

[2019: Sch. 5 (Annex): 1.6]

If plaster used as fire protection on walls is more than 19 mm thick—

(a) it must be reinforced with expanded metal lath that—

(i) has a mass per unit area of not less than 1.84 kg/m^2; and

(ii) has not fewer than 98 meshes per metre; and

(iii) is protected against corrosion by galvanising or other suitable method; or

(b) it must be reinforced with 13 mm x 13 mm x 0.7 mm galvanised steel wire mesh securely fixed at a distance from the face of the wall of not less than ⅓ of the total thickness of the plaster.

S2C8 Ashlar stone masonry

[2019: Sch. 5 (Annex): 2]

Ashlar masonry must not be used in a part of the building containing more than 2 *storeys*, and must not be of—

(a) aplite, granite, granodiorite, quartz dacite, quartz diorite, quartz porphyrite or quartz porphyry; or

(b) conglomerate, quartzite or sandstone; or

(c) chert or flint; or

(d) limestone or marble.

S2C9 Dimensions of masonry

[2019: Sch. 5 (Annex): 3]

The thicknesses of masonry of calcium-silicate, concrete and fired clay are calculated as set out in S2C10 to S2C12.

S2C10 Solid units

[2019: Sch. 5 (Annex): 3.1]

For masonry in which the amount of perforation or coring of the units does not exceed 25% by volume (based on the overall rectangular shape of the unit) the thickness of the wall must be calculated from the manufacturing dimensions of the units and the specified thickness of the joints between them as appropriate.

S2C11 Hollow units

[2019: Sch. 5 (Annex): 3.2]

For masonry in which the amount of perforation or coring of the units exceeds 25% by volume (based on the overall rectangular shape of the unit) the thickness of the wall must be calculated from the equivalent thicknesses of the units and the specified thickness of the joints between them as appropriate.

S2C12 Equivalent thickness

[2019: Sch. 5 (Annex): 3.3]

The equivalent thickness of a masonry unit is calculated by dividing the net volume by the area of one vertical face.

S2C13 Height-to-thickness ratio of certain walls

[2019: Sch. 5 (Annex): 5]

The ratio of height between lateral supports to overall thickness of a wall of ashlar, no-fines concrete, unreinforced concrete, solid gypsum blocks, gypsum-perlite or gypsum-vermiculite plaster on metal lath and channel, must not exceed—

(a) 20 for a *loadbearing* wall; or

(b) 27 for a non-*loadbearing* wall.

S2C14 Increase in thickness by plastering — walls

[2019: Sch. 5 (Annex): 6.1]

If a wall of ashlar, solid gypsum blocks or concrete is plastered on both sides to an equal thickness, the thickness of the wall for the purposes of Tables S1C2b and S1C2c (but not for the purposes of S2C5) may be increased by the thickness of the plaster on one side.

S2C15 Increase in thickness by plastering — columns

[2019: Sch. 5 (Annex): 6.2]

(1) Where Tables S1C2e, S1C2f, S1C2g, S1C2h, S1C2i and S1C2j indicate that column-protection is to be plastered, the tabulated thicknesses are those of the principal material.

(2) The thicknesses referred to in (1) do not include the thickness of plaster, which must be additional to the listed thickness of the material to which it is applied.

S2C16 Gypsum-perlite or gypsum-vermiculite plaster or metal lath — walls

[2019: Sch. 5 (Annex): 7.1]

In walls fabricated of gypsum-perlite or gypsum-vermiculite plaster on metal lath and channel—

(a) the lath must be securely wired to each side of 19 mm x 0.44 kg/m steel channels (used as studs) spaced at not more than 400 mm centres; and

(b) the gypsum-perlite or gypsum-vermiculite plaster must be applied symmetrically to each exposed side of the lath.

S2C17 Gypsum-perlite or gypsum-vermiculite plaster or metal lath — columns

[2019: Sch. 5 (Annex): 7.2]

(1) For the fire protection of steel columns with gypsum-perlite or gypsum-vermiculite on metal lath—

(a) the lath must be fixed at not more than 600 mm centres vertically to steel furring channels, and—

(i) if the plaster is to be 35 mm thick or more — at least 12 mm clear of the column; or

(ii) if the plaster is to be less than 35 mm thick — at least 6 mm clear of the column; or

(b) the plaster may be applied to self-furring lath with furring dimples to hold it not less than 10 mm clear of the column.

(2) For the purposes of (1), the thickness of the plaster must be measured from the back of the lath.

S2C18 Gypsum-perlite or gypsum-vermiculite plaster or metal lath — beams

[2019: Sch. 5 (Annex): 7.3]

For the fire protection of steel beams with gypsum-perlite or gypsum-vermiculite on metal lath—

(a) the lath must be fixed at not more than 600 mm centres to steel furring channels and at least 20 mm clear of the steel; and

(b) the thickness of the plaster must be measured from the back of the lath.

S2C19 Exposure of columns

[2019: Sch. 5 (Annex): 8.1]

A column incorporated in or in contact on one or more sides with a wall of solid masonry or concrete at least 100 mm thick may be considered to be exposed to fire on no more than 3 sides.

S2C20 Exposure of beams

[2019: Sch. 5 (Annex): 8.2]

A beam, open-web joist, girder or truss in direct and continuous contact with a concrete slab or a hollow block floor or roof may be considered to be exposed to fire on no more than 3 sides.

S2C21 Filling of column spaces

[2019: Sch. 5 (Annex): 9]

(1) The spaces between the fire-protective material and the steel (and any re-entrant parts of the column itself) must be filled solid with a fire-protective material like concrete, gypsum or grout.

(2) The insides of hollow sections, including pipes, need not be filled.

S2C22 Hollow terracotta blocks

[2019: Sch. 5 (Annex): 10]

The proportion of cored holes or perforations in a hollow terracotta block (based on the overall rectangular volume of the unit) must not exceed the following:

(a) For blocks up to 75 mm thick — 35%.

(b) For blocks more than 75 mm but not more than 100 mm thick — 40%.

(c) For blocks more than 100 mm — 50%.

S2C23 Reinforcing for column and beam protection — masonry

[2019: Sch. 5 (Annex): 11.1]

Masonry of calcium-silicate, fired clay and concrete for the protection of steel columns must have steel-wire or mesh reinforcement in every second course and lapped at the corners.

S2C24 Reinforcing for column and beam protection — gypsum blocks and hollow terracotta blocks

[2019: Sch. 5 (Annex): 11.2]

Gypsum blocks and hollow terracotta blocks for the protection of steel columns must have steel-wire or mesh reinforcement in every course and lapped at corners.

S2C25 Reinforcing for column and beam protection — structural concrete and poured gypsum

[2019: Sch. 5 (Annex): 11.3]

If a steel column or a steel beam is to be protected with structural concrete or poured gypsum, the concrete or gypsum must be reinforced with steel-wire mesh or steel-wire binding placed about 20 mm from its outer surface, and—

(a) for concrete or gypsum less than 50 mm thick, the steel wire must be—

(i) at least 3.15 mm in diameter; and

(ii) spaced at not more than 100 mm vertically; or

(b) for concrete or gypsum not less than 50 mm thick, the steel wire must be either—

(i) of a diameter and spacing in accordance with (a); or

(ii) at least 5 mm in diameter and spaced at not more than 150 mm vertically.

S2C26 Reinforcing for column and beam protection — gypsum-perlite or gypsum-vermiculite plaster sprayed to contour

[2019: Sch. 5 (Annex): 11.4]

(1) If a steel column or steel beam is protected with either gypsum-perlite or gypsum-vermiculite plaster sprayed to contour and the construction falls within the limits of Table S2C26a or S2C26b, the plaster must be reinforced with—

(a) expanded metal lath complying with S2C7; or

(b) galvanised steel wire mesh complying with S2C7.

(2) The reinforcement must be placed at a distance from the face of the plaster of at least 1/3 of the thickness of the plaster and must be securely fixed to the column or beam at intervals of not more than the relevant listing in Tables S2C26a and S2C26b.

(3) For the purposes of Tables S2C26a and S2C26b—

(a) "vertical" includes a surface at not more than 10º to the vertical; and

(b) "horizontal" includes a surface at not more than 10º to the horizontal; and

(c) "underside" means the underside of any horizontal or non-vertical surface.

Table S2C26a: Reinforcement of gypsum-perlite or gypsum-vermiculite plaster sprayed to contour — vertical members with H or I cross-section

Surface to be protected	Reinforcement required if smaller dimension of surface exceeds (mm)	Max spacing of fixings of the mesh to surface (mm)
Vertical	450	450
Non-vertical	300	300
Underside	300	300
Upper side of a horizontal surface	Not required	N/A

Table S2C26b: Reinforcement of gypsum-perlite or gypsum-vermiculite plaster sprayed to contour — vertical members with other shapes

Surface to be protected	Reinforcement required if smaller dimensions of surface exceeds (mm)	Max spacing of fixings of the mesh to surface (mm)
Vertical	Any size	450
Non-vertical	Any size	300
Undersize	Any size	300
Upper side of a horizontal surface	Not required	N/A

S2C27 Measurement of thickness of column and beam protection

[2019: Sch. 5 (Annex): 12.1]

The thickness of the fire protection to steel columns and steel beams (other than fire protection of gypsum-perlite or gypsum-vermiculite plaster sprayed on metal lath or sprayed to contour) is to be measured from the face or edge of the steel, from the face of a splice plate or from the outer part of a rivet or bolt, whichever is the closest to the outside of the fire-protective construction, except that—

(a) if the thickness of the fire protection is 40 mm or more, rivet heads may be disregarded; and

(b) if the thickness of the fire protection is 50 mm or more—

(i) any part of a bolt (other than a high-tensile bolt) may be disregarded; and

(ii) a column splice plate within 900 mm of the floor may encroach upon the fire protection by up to a ¼ of the thickness of the fire protection; and

(c) the flange of a column or beam may encroach by up to 12 mm upon the thickness of the fire protection at right

angles to the web if—

(i) the column or beam is intended to have an FRL of 240/240/240 or 240/–/–; and

(ii) the flange projects 65 mm or more from the web; and

(iii) the thickness of the edge of the flange (inclusive of any splice plate) is not more than 40 mm.

Specification 3 Fire hazard properties

S3C1 Scope

[2019: Sch. 6: 1]

This Specification sets out the procedures for determining the *fire hazard properties* of assemblies tested to AS/NZS 1530.3.

Assemblies

S3C2 General requirement

[2019: Sch. 6: 2.1]

The *fire hazard properties* of assemblies and their ability to screen their core materials as *required* under Specification 7 must be determined by testing in accordance with S3C3 to S3C6.

S3C3 Form of test

[2019: Sch. 6: 2.2]

Tests must be carried out in accordance with—

(a) for the determination of the *Spread-of-Flame Index* and *Smoke-Developed Index* — AS/NZS 1530.3; and

(b) for the determination of the ability to prevent ignition and to screen its core material from free air — AS 1530.4.

S3C4 Test specimens

[2019: Sch. 6: 2.3]

Test specimens must incorporate—

(a) all types of joints; and

(b) all types of perforations, recesses or the like for pipes, light switches or other fittings, which are proposed to be used for the member or assembly of members in the building.

S3C5 Concession

[2019: Sch. 6: 2.4]

S3C4 does not apply to joints, perforations, recesses or the like that are larger than those in the proposed application and have already been tested in the particular form of construction concerned and found to comply with the conditions of the test.

S3C6 Smaller specimen permitted

[2019: Sch. 6: 2.5]

A testing laboratory may carry out the test specified in S3C3(b) at pilot scale if a specimen (which must be not less than 900 mm x 900 mm) will adequately represent the proposed construction in the building, but the results of that test do not apply to construction larger than limits defined by the laboratory conducting the pilot examination.

Section B Structure

Part B1 Structural provisions

Objectives

B1O1 Objective

Functional Statements

B1F1 Structure

B1F2 Glazing

Performance Requirements

B1P1 Structural reliability

B1P2 Structural resistance

B1P3 Glass installations at risk of human impact

B1P4 Buildings in flood areas

Verification Methods

B1V1 Structural reliability

B1V2 Structural robustness

Deemed-to-Satisfy Provisions

B1D1 Deemed-to-Satisfy Provisions

B1D2 Resistance to actions

B1D3 Determination of individual actions

B1D4 Determination of structural resistance of materials and forms of construction

B1D5 Structural software

B1D6 Construction of buildings in flood hazard areas

Specification 4 Design of buildings in cyclonic areas

S4C1 Scope

S4C2 Roof cladding

Part B1 Structural provisions

Introduction to this Part

This Part focuses on safeguarding people from injury caused by structural failure, loss of amenity caused by structural behaviour (deflections, creep, vibration, settlement and the like), protection of other property from physical damage caused by structural failure and safeguarding people from injury that may be caused by failure of, or impact with, glazing.

Objectives

B1O1 Objective

[2019: BO1]

The Objective of this Part is to—

(a) safeguard people from injury caused by structural failure; and

(b) safeguard people from loss of amenity caused by structural behaviour; and

(c) protect *other property* from physical damage caused by structural failure; and

(d) safeguard people from injury that may be caused by failure of, or impact with, glazing.

Functional Statements

B1F1 Structure

[2019: BF1.1]

A building or structure is to withstand the combination of loads and other actions to which it may be reasonably subjected.

B1F2 Glazing

[2019: BF1.2]

(1) Glazing is to be installed in a building to avoid undue risk of injury to people.

(2) Glazing in a building should not cause injury to people due to its failure or people impacting with it because they did not see it.

Performance Requirements

B1P1 Structural reliability

[2019: BP1.1]

(1) By resisting the actions to which it may reasonably be expected to be subjected, a building or structure, during construction and use, with appropriate degrees of reliability, must—

(a) perform adequately under all reasonably expected design actions; and

(b) withstand extreme or frequently repeated design actions; and

(c) be designed to sustain local damage, with the structural system as a whole remaining stable and not being damaged to an extent disproportionate to the original local damage; and

(d) avoid causing damage to *other properties*.

(2) The actions to be considered to satisfy (1) include but are not limited to—

(a) permanent actions (dead loads) including, for a Class 7b building, an additional notional permanent roof load of not less than 0.15 kPa to support the addition of solar photovoltaic panels; and

(b) imposed actions (live loads arising from occupancy and use); and

(c) wind action; and

(d) earthquake action; and

(e) snow action; and

(f) liquid pressure action; and

(g) ground water action; and

(h) rainwater action (including ponding action); and

(i) earth pressure action; and

(j) differential movement; and

(k) time dependent effects (including creep and shrinkage); and

(l) thermal effects; and

(m) ground movement caused by—

(i) swelling, shrinkage or freezing of the subsoil; and

(ii) landslip or subsidence; and

(iii) siteworks associated with the building or structure; and

(n) *construction activity actions*; and

(o) termite actions.

Exemptions

The requirement for an additional notional permanent roof load to support photovoltaic panels in B1P1(2)(a) does not apply to a Class 7b building—

(a) where 100% of the roof area is shaded for more than 70% of daylight hours; or

(b) with a roof area of not more than 55 m^2; or

(c) where more than 50% of the roof area is used as a terrace, *carpark*, roof garden, roof light or the like.

Notes

The requirement in B1P1(2)(a) to consider, for a Class 7b building, an additional notional permanent roof load of not less than 0.15 kPa to support the addition of solar photovoltaic panels does not take effect until 1 October 2023.

B1P2 Structural resistance

[2019: BP1.2]

The structural resistance of materials and forms of construction must be determined using five percentile characteristic material properties with appropriate allowance for—

(a) known construction activities; and

(b) type of material; and

(c) characteristics of the site; and

(d) the degree of accuracy inherent in the methods used to assess the structural behaviour; and

(e) action effects arising from the differential settlement of foundations, and from restrained dimensional changes due to temperature, moisture, shrinkage, creep and similar effects.

B1P3 Glass installations at risk of human impact

[2019: BP1.3]

Glass installations that are at risk of being subjected to human impact must have glazing that—

(a) if broken on impact, will break in a way that is not likely to cause injury to people; and

(b) resists a reasonably foreseeable human impact without breaking; and

(c) is protected or marked in a way that will reduce the likelihood of human impact.

QLD B1P4

SA B1P4

B1P4 Buildings in flood areas

[2019: BP1.4]

(1) A building in a *flood hazard area*, must be designed and constructed, to the degree necessary, to resist flotation, collapse or significant permanent movement resulting from the action of hydrostatic, hydrodynamic, erosion and scour, wind and other actions during the *defined flood event*.

(2) The actions and requirements to be considered to satisfy (1) include but are not limited to—

(a) flood actions; and

(b) elevation requirements; and

(c) foundation and footing requirements; and

(d) requirements for enclosures below the *flood hazard level*; and

(e) requirements for structural connections; and

(f) material requirements; and

(g) requirements for utilities; and

(h) requirements for occupant egress.

Applications

B1P4 only applies to—

(a) a Class 2 or 3 building or a Class 4 part of a building; and

(b) a Class 9a *health-care building*; and

(c) a Class 9c building.

Verification Methods

B1V1 Structural reliability

[2019: BV1]

(1) This *Verification Method* is applicable to components with a resistance coefficient of variation of at least 10% and not more than 40%.

(2) Where a component has a calculated resistance coefficient of variation of less than 10%, then a minimum value of 10% must be used.

(3) Compliance with B1P1 and B1P2 is verified for the design of a structural component for strength where—

(a) the capacity reduction factor ϕ satisfies $\phi \leq Average(\phi_G, \phi_Q, \phi_W, \ldots)$, where $\phi_G, \phi_Q, \phi_W, \ldots$ are capacity reduction factors for all relevant actions and must contain at least permanent (G), imposed (Q) and wind (W) actions; and

(b) the capacity reduction factors $\phi_G, \phi_Q, \phi_W, \ldots$ are calculated for target reliability indices for permanent action β_{TG},

for imposed action β_{TQ}, for wind action β_{TW},… in accordance with the equation: $\beta = \ln\left[\left(\frac{\overline{R}}{\overline{S}}\right)\sqrt{\frac{C_S}{C_R}}\right] / \sqrt{\ln(C_R.C_S)}$, where—

(i) $\left(\frac{\overline{R}}{\overline{S}}\right) = \frac{\left(\frac{\gamma}{\phi}\right)}{\left(\frac{\overline{S}}{S_N}\right)}\left(\frac{\overline{R}}{R_N}\right)$; and

(ii) $C_R = 1 + V_R^2$
$C_S = 1 + V_S^2$, where—

(A) $\frac{\overline{R}}{R_N}$ = ratio of mean resistance to nominal; and

(B) $\frac{\overline{S}}{S_N}$ = ratio of mean action to nominal; and

(C) C_S = correction factor for action; and

(D) C_R = correction factor for resistance; and

(E) V_S = coefficient of variation of the appropriate action as given in Table B1V1a; and

(F) V_R = coefficient of variation of the resistance; and

(G) γ = appropriate load factor for the action as given in AS/NZS 1170.0; and

(H) ϕ = capacity factor for the appropriate action; and

(c) the annual target reliability indices $\beta_{TG}, \beta_{TQ}, \beta_{TW}, \cdots$ are established as follows:

(i) For situations where it is appropriate to compare an equivalent Deemed-to-Satisfy product, a resistance model must be established for the equivalent Deemed-to-Satisfy product and $\beta_{TG}, \beta_{TQ}, \beta_{TW}, \cdots$ must be calculated for the equivalent Deemed-to-Satisfy product in accordance with the equation given at (b).

(ii) The target reliability indices $\beta_{TG}, \beta_{TQ}, \beta_{TW}, \cdots$ thus established, must be not less than those given in Table B1V1b minus 0.5.

(iii) For situations where it is not appropriate to compare with an equivalent Deemed-to-Satisfy product, the target reliability index β must be as given in Table B1V1b.

(4) The resistance model for the component must be established by taking into account variability due to material properties, fabrication and construction processes and structural modelling.

Table B1V1a: Annual action models

Design action	Ratio of mean action to nominal	Coefficient of variation of the action
Permanent action $(\gamma_G = 1.35)$	$(\overline{G}/G_N) = 1.00$	$V_G = 0.10$
Imposed action $(\gamma_Q = 1.50)$	$(\overline{Q}/Q_N) = 0.50$	$V_Q = 0.43$
Wind action $(\gamma_W = 1.00)$ (non-cyclonic)	$(\overline{W}/W_N) = 0.33$	$V_W = 0.49$
Wind action $(\gamma_W = 1.00)$ (cyclonic)	$(\overline{W}/W_N) = 0.16$	$V_W = 0.71$
Snow action $(\gamma_S = 1.00)$	$(\overline{S}/S_N) = 0.29$	$V_S = 0.57$

Design action	Ratio of mean action to nominal	Coefficient of variation of the action
Earthquake action $(\gamma_E = 1.00)$	$(\bar{E}/E_N) = 0.05$	$V_E = 1.98$

Table B1V1b: Annual target reliability indices

Type of action	Target reliability index β
Permanent action	4.3
Imposed action	4.0
Wind, snow and earthquake action	3.7

Table Notes

(1) Table B1V1b is applicable for components that exhibit brittle failure similar to concrete as specified in AS 3600.

(2) For components with creep characteristics similar to timber as specified in AS 1720.1, the target reliability index for permanent action must be increased to 5.0.

(3) The above target reliability indices are based on materials or systems that exhibit creep or brittle failure similar to timber or concrete.

(4) Table B1V1b may also be applicable to materials or systems that exhibit creep or brittle failure differently to steel, timber or concrete provided the creep or brittle nature of the material or system are properly accounted for in the design model.

(5) The above target reliability indices are also applicable for materials or systems that exhibit ductile failure characteristics.

B1V2 Structural robustness

[2019: BV2]

(1) Compliance with B1P1(1)(c) is verified for structural robustness if (2) and (3) are complied with.

(2) The structure is assessed such that the building remains stable and the resulting collapse does not extend further than the immediately adjacent *storeys* upon the notional removal in isolation of—

(a) any supporting column; or

(b) any beam supporting one or more columns; or

(c) any segment of a load bearing wall of length equal to the height of the wall.

(3) It is demonstrated that if a supporting structural component is relied upon to carry more than 25% of the total structure, a systematic risk assessment of the building is undertaken and critical high risk components are identified and designed to cope with the identified hazard or protective measures chosen to minimise the risk.

Deemed-to-Satisfy Provisions

B1D1 Deemed-to-Satisfy Provisions

[2019: B1.0]

(1) Where a *Deemed-to-Satisfy Solution* is proposed, *Performance Requirements* B1P1 to B1P4 are satisfied by complying with B1D2 to B1D6.

(2) Where a *Performance Solution* is proposed, the relevant *Performance Requirements* must be determined in accordance with A2G2(3) and A2G4(3) as applicable.

B1D2 Resistance to actions

[2019: B1.1]

The resistance of a building or structure must be greater than the most critical action effect resulting from different combinations of actions, where—

(a) the most critical action effect on a building or structure is determined in accordance with B1D3 and the general design procedures contained in AS/NZS 1170.0; and

(b) the resistance of a building or structure is determined in accordance with B1D4.

WA B1D3

B1D3 Determination of individual actions

[2019: B1.2]

The magnitude of individual actions must be determined in accordance with the following:

(a) Permanent actions:

(i) the design or known dimensions of the building or structure; and

(ii) the unit weight of the construction; and

(iii) AS/NZS 1170.1; and

(iv) for a Class 7b building, a notional additional permanent roof load of not less than 0.15 kPa to support the addition of solar photovoltaic panels.

(b) Imposed actions:

(i) the known loads that will be imposed during the occupation or use of the building or structure; and

(ii) *construction activity actions*; and

(iii) AS/NZS 1170.1.

(c) Wind, snow and ice and earthquake actions:

(i) the applicable annual probability of design event for safety, determined by—

(A) assigning the building or structure an Importance Level in accordance with Table B1D3a; and

(B) determining the corresponding annual probability of exceedance in accordance with Table B1D3b; and

(ii) AS/NZS 1170.2; and

(iii) AS/NZS 1170.3 as appropriate; and

(iv) AS 1170.4 as appropriate; and

(v) in cyclonic areas, metal roof cladding, its connections and immediate supporting members must comply with Specification 4; and

(vi) for the purposes of (v), cyclonic areas are those determined as being located in wind regions C and D in accordance with AS/NZS 1170.2.

(d) Actions not covered in (a), (b) and (c) above:

(i) the nature of the action; and

(ii) the nature of the building or structure; and

(iii) the Importance Level of the building or structure determined in accordance with Table B1D3a; and

(iv) AS/NZS 1170.1.

(e) For the purposes of (d) the actions include but are not limited to—

(i) liquid pressure action; and

(ii) ground water action; and

(iii) rainwater action (including ponding action); and

(iv) earth pressure action; and

(v) differential movement; and

(vi) time dependent effects (including creep and shrinkage); and

(vii) thermal effects; and

(viii) ground movement caused by—

(A) swelling, shrinkage or freezing of the subsoil; and

(B) landslip or subsidence; and

(C) *siteworks* associated with the building or structure; and

(ix) *construction activity actions*.

Table B1D3a: Importance Levels of buildings and structures

Importance level	Building Types
1	Buildings or structures presenting a low degree of hazard to life and *other property* in the case of failure.
2	Buildings or structures not included in Importance Level 1, 3 and 4.
3	Buildings or structures that are designed to contain a large number of people.
4	Buildings or structures that are essential to post-disaster recovery or associated with hazardous facilities.

Table B1D3b: Design events for safety

Importance level	Annual probability of exceedance for non-cyclonic wind	Annual probability of exceedance for cyclonic wind	Annual probability of exceedance for snow	Annual probability of exceedance for earthquake
1	1:100	1:200	1:100	1:250
2	1:500	1:500	1:150	1:500
3	1:1000	1:1000	1:200	1:1000
4	1:2000	1:2000	1:250	1:1500

Notes

B1D3(a)(iv) does not take effect until 1 October 2023.

Exemptions

B1D3(a)(iv) does not apply to a Class 7b building—

(a) where 100% of the roof area is shaded for more than 70% of daylight hours; or

(b) with a roof area of not more than 55m^2; or

(c) where more than 50% of the roof area is used as a terrace, *carpark*, roof garden, roof light or the like.

NT B1D4

QLD B1D4

WA B1D4

B1D4 Determination of structural resistance of materials and forms of construction

[2019: B1.4]

The structural resistance of materials and forms of construction must be determined in accordance with the following, as appropriate:

(a) Masonry (including masonry-veneer, unreinforced masonry and reinforced masonry): AS 3700, except—

(i) '(for piers—isolated or engaged)' is removed from Clause 8.5.1(d); and

(ii) where Clause 8.5.1 requires design as for unreinforced masonry in accordance with Section 7, the member must also be designed as unreinforced masonry in accordance with Tables 10.3 and 4.1(a)(i)(C) of AS 3700.

(b) Concrete:

(i) Concrete construction (including reinforced and prestressed concrete): AS 3600.

(ii) Autoclaved aerated concrete: AS 5146.1 and AS 5146.3.

(iii) Post-installed and cast-in fastenings: AS 5216.

(c) Steel construction:

(i) Steel structures: AS 4100.

(ii) Cold-formed steel structures: AS/NZS 4600.

(iii) Residential and low-rise steel framing: NASH Standard – Residential and Low-Rise Steel Framing Part 1 or Part 2.

(d) Composite steel and concrete: AS/NZS 2327.

(e) Aluminium construction: AS/NZS 1664.1 or AS/NZS 1664.2.

(f) Timber construction:

(i) Design of timber structures: AS 1720.1.

(ii) Timber structures: AS 1684.2, AS 1684.3 or AS 1684.4.

(iii) Nailplated timber roof trusses: AS 1720.5.

(g) Piling: AS 2159.

(h) Glazed assemblies:

(i) The following glazed assemblies in an *external wall* must comply with AS 2047:

(A) Windows excluding those listed in (ii).

(B) Sliding and swinging glazed doors with a frame, including french and bi-fold doors with a frame.

(C) Adjustable louvres.

(D) Shopfronts.

(E) Window walls with one piece framing.

(ii) All glazed assemblies not covered by (i) and the following glazed assemblies must comply with AS 1288:

(A) All glazed assemblies not in an *external wall*.

(B) Revolving doors.

(C) Fixed louvres.

(D) Skylights, roof lights and windows in other than the vertical plane.

(E) Sliding and swinging doors without a frame.

(F) Windows constructed on site and architectural one-off windows, which are not design tested in accordance with AS 2047.

(G) Second-hand windows, re-used windows and recycled windows.

(H) Heritage windows.

(I) Glazing used in balustrades and sloping overhead glazing.

(i) Termite Risk Management: Where a *primary building element* is subject to attack by subterranean termites: AS 3660.1, and—

(i) for the purposes of this provision, a *primary building element* consisting entirely of, or a combination of, any of the following materials is considered not subject to termite attack:

(A) Steel, aluminium or other metals.

(B) Concrete.

(C) Masonry.

(D) Fibre-reinforced cement.

(E) Timber — naturally termite resistant in accordance with Appendix C of AS 3660.1.

(F) Timber — preservative treated in accordance with Appendix D of AS 3660.1; and

(ii) a durable notice must be permanently fixed to the building in a prominent location, such as a meter box or the like, indicating—

(A) the termite management system used; and

(B) the date of installation of the system; and

(C) where a chemical is used, its life expectancy as listed on the *appropriate authority's* pesticides register label; and

(D) the installer's or manufacturer's recommendations for the scope and frequency of future inspections for termite activity.

(j) Roof construction (except in cyclonic areas):

(i) Terracotta, fibre-cement and timber slates and shingles: AS 4597.

(ii) Roof tiling: AS 2050.

(iii) Cellulose cement corrugated sheets: AS/NZS 2908.1 with safety mesh installed in accordance with AS 1562.3 clause 2.4.3.2 except for sub-clause (c)(vii) for plastic sheeting.

(iv) Metal roofing: AS 1562.1.

(k) Particleboard structural flooring: AS 1860.2.

(l) Garage doors and other large access doors in openings not more than 3 m in height in *external walls* of buildings determined as being located in wind region C or D in accordance with AS/NZS 1170.2: AS/NZS 4505.

(m) Lift *shafts* which are not *required* to have an FRL, must—

(i) except as required by (ii), be completely enclosed with non-perforated material between the bottom of the pit and the ceiling of the lift *shaft*, other than—

(A) at landing doors, emergency doors and pit access doors; and

(B) *low-rise, low-speed constant pressure lifts*; and

(C) *small-sized, low-speed automatic lifts*; and

(ii) in *atrium* and observation areas, be protected with non-perforated material not less than 2.5 m in height—

(A) above any places on which a person can stand, which are within 800 mm horizontal reach of any vertical moving lift component including ropes and counterweights; and

(B) at the lowest level of the *atrium* area that the lift serves, on all sides except the door opening, for not less than 2.5 m in height, by enclosure with non-perforated material; and

(iii) be of non-brittle material; and

(iv) where glazing is used—

(A) comply with Table B1D4; or

(B) not fail the deflection criteria *required* by S6C11(c)(iii).

Table B1D4: Material and minimum thickness of glazing and polycarbonate sheet

Application	Lift *shaft* vision panels more than 65 000 mm^2, door panels, and lift *shafts*	Lift *shaft* vision panels less than or equal to 65 000 mm^2
Laminated glass	10 mm (0.76 mm interlayer)	6 mm (0.76 mm interlayer)
Toughened/ laminated glass	10 mm (0.76 mm interlayer)	6 mm (0.76 mm interlayer)
Annealed glass with security polyester film coating	10 mm	6 mm
Safety wire glass	Not applicable	Subject to fire test
Polycarbonate sheet	13 mm	6 mm

B1D5 Structural software

[2019: B1.5]

(1) Structural software used in computer aided design of a building or structure, that uses design criteria based on the *Deemed-to-Satisfy Provisions* of the BCA, including its referenced documents, for the design of steel or timber trussed roof and floor systems and framed building systems, must comply with the ABCB Protocol for Structural Software.

(2) Structural software referred to in (1) can only be used for buildings within the following geometric limits:

(a) The distance from ground level to the underside of eaves must not exceed 6 m.

(b) The distance from ground level to the highest point of the roof, neglecting chimneys, must not exceed 8.5 m.

(c) The building width including roofed verandahs, excluding eaves, must not exceed 16 m.

(d) The building length must not exceed five times the building width.

(e) The roof pitch must not exceed 35 degrees.

(3) The requirements of (1) do not apply to design software for individual frame members such as electronic tables similar to those provided in—

(a) AS 1684; or

(b) NASH Standard Residential and Low-Rise Steel Framing Part 2.

QLD B1D6

SA B1D6

VIC B1D6

B1D6 Construction of buildings in flood hazard areas

[2019: B1.6]

(1) A building in a *flood hazard area* must comply with the ABCB Standard for Construction of Buildings in Flood Hazard Areas.

(2) The requirements of (1) only apply to a Class 2 or 3 building, Class 9a *health-care building*, Class 9c building or a Class 4 part of a building.

Specification 4 Design of buildings in cyclonic areas

S4C1 Scope

[2019: Spec B1.2: 1]

(1) This specification contains requirements for the design of buildings in cyclonic areas in addition to the requirements of AS/NZS 1170.2.

WA S4C1(2)

(2) For the purposes of Specification 4, cyclonic areas are those determined as being located in wind regions C and D in accordance with AS/NZS 1170.2.

S4C2 Roof cladding

[2019: Spec B1.2: 2]

Test for strength: Metal roof cladding, its connections and immediate supporting members must be capable of remaining in position notwithstanding any permanent distortion, fracture or damage that might occur in the sheet or fastenings under the pressure sequences A to G defined in Table S4C2.

Table S4C2: Low-high-low pressure sequence

Sequence	Number of cycles	Load
A	4500	0 to 0.45 Pt
B	600	0 to 0.6 Pt
C	80	0 to 0.8 Pt
D	1	0 to 1.0 Pt
E	80	0 to 0.8 Pt
F	600	0 to 0.6 Pt
G	4500	0 to 0.45 Pt

Table Notes

(1) Pt is the ultimate limit state wind pressure on internal and external surfaces as determined in accordance with AS/NZS 1170.2, modified by an appropriate factor for variability, as determined in accordance with Table B1 of AS/NZS 1170.0.

(2) The rate of load cycling must be less than 3 Hz.

(3) The single load cycle (sequence D) must be held for a minimum of 10 seconds.

NT S4C3

Section C Fire resistance

Part C1 Fire resistance

Objectives

C1O1 Objective

Functional Statements

C1F1 Structural stability during a fire

C1F2 Prevention of fire spread

Performance Requirements

C1P1 Structural stability during a fire

C1P2 Spread of fire

C1P3 Spread of fire and smoke in health and residential care buildings

C1P4 Safe conditions for evacuation

C1P5 Behaviour of concrete external walls in a fire

C1P6 Fire protection of service equipment

C1P7 Fire protection of emergency equipment

C1P8 Fire protection of openings and penetrations

C1P9 Fire brigade access

Verification Methods

C1V1 Fire spread between buildings on adjoining allotments

C1V2 Fire spread between buildings on the same allotment

C1V3 Fire spread via external walls

C1V4 Fire Safety Verification Method

Part C2 Fire resistance and stability

Deemed-to-Satisfy Provisions

C2D1 Deemed-to-Satisfy Provisions

C2D2 Type of construction required

C2D3 Calculation of rise in storeys

C2D4 Buildings of multiple classification

C2D5 Mixed types of construction

C2D6 Two storey Class 2, 3 or 9c buildings

C2D7 Class 4 parts of buildings

C2D8 Open spectator stands and indoor sports stadiums

C2D9 Lightweight construction

C2D10 Non-combustible building elements

C2D11 Fire hazard properties

C2D12 Performance of external walls in fire

C2D13 Fire-protected timber: Concession

C2D14 Ancillary elements

C2D15 Fixing of bonded laminated cladding panels

Part C3 Compartmentation and separation

Deemed-to-Satisfy Provisions

C3D1 Deemed-to-Satisfy Provisions

C3D2 Application of Part

	C3D3	General floor area and volume limitations
	C3D4	Large isolated buildings
	C3D5	Requirements for open spaces and vehicular access
	C3D6	Class 9 buildings
	C3D7	Vertical separation of openings in external walls
	C3D8	Separation by fire walls
	C3D9	Separation of classifications in the same storey
	C3D10	Separation of classifications in different storeys
	C3D11	Separation of lift shafts
	C3D12	Stairways and lifts in one shaft
	C3D13	Separation of equipment
	C3D14	Electricity supply system
	C3D15	Public corridors in Class 2 and 3 buildings
Part C4	**Protection of openings**	
	Deemed-to-Satisfy Provisions	
	C4D1	Deemed-to-Satisfy Provisions
	C4D2	Application of Part
	C4D3	Protection of openings in external walls
	C4D4	Separation of external walls and associated openings in different fire compartments
	C4D5	Acceptable methods of protection
	C4D6	Doorways in fire walls
	C4D7	Sliding fire doors
	C4D8	Protection of doorways in horizontal exits
	C4D9	Openings in fire-isolated exits
	C4D10	Service penetrations in fire-isolated exits
	C4D11	Openings in fire-isolated lift shafts
	C4D12	Bounding construction: Class 2 and 3 buildings and Class 4 parts
	C4D13	Openings in floors and ceilings for services
	C4D14	Openings in shafts
	C4D15	Openings for service installations
	C4D16	Construction joints
	C4D17	Columns protected with lightweight construction to achieve an FRL
Specification 5	**Fire-resisting construction**	
	S5C1	Scope
	S5C2	Exposure to fire-source features
	S5C3	Fire protection for a support of another part
	S5C4	Lintels
	S5C5	Method of attachment not to reduce the fire-resistance of building elements
	S5C6	General concessions
	S5C7	Mezzanine floors: Concession
	S5C8	Enclosure of shafts
	S5C9	Carparks in Class 2 and 3 buildings
	S5C10	Residential care building: Concession

	S5C11	Type A fire-resisting construction — fire-resistance of building elements
	S5C12	Type A fire-resisting construction — concessions for floors
	S5C13	Type A fire-resisting construction — floor loading of Class 5 and 9b buildings: Concession
	S5C14	Type A fire-resisting construction — roof superimposed on concrete slab: Concession
	S5C15	Type A fire-resisting construction — roof: Concession
	S5C16	Type A fire-resisting construction — roof lights
	S5C17	Type A fire-resisting construction — internal columns and walls: Concession
	S5C18	Type A fire-resisting construction — open spectator stands and indoor sports stadiums: Concession
	S5C19	Type A fire-resisting construction — carparks
	S5C20	Type A fire-resisting construction — Class 2 and 3 buildings: Concession
	S5C21	Type B fire-resisting construction — fire-resistance of building elements
	S5C22	Type B fire-resisting construction — carparks
	S5C23	Type B fire-resisting construction — Class 2 and 3 buildings: Concession
	S5C24	Type C fire-resisting construction — fire-resistance of building elements
	S5C25	Type C fire-resisting construction — carparks
Specification 6	**Structural tests for lightweight construction**	
	S6C1	Scope
	S6C2	Application
	S6C3	Walls of certain Class 9b buildings
	S6C4	Walls of shafts and fire-isolated exits generally
	S6C5	Additional requirements for lift shafts
	S6C6	Walls generally
	S6C7	General requirements for testing
	S6C8	Testing in-situ
	S6C9	Testing of specimens
	S6C10	Test methods
	S6C11	Criteria for compliance
Specification 7	**Fire hazard properties**	
	S7C1	Scope
	S7C2	Application
	S7C3	Floor linings and floor coverings
	S7C4	Wall and ceiling linings
	S7C5	Air-handling ductwork
	S7C6	Lift cars
	S7C7	Other materials
Specification 8	**Performance of external walls in fire**	
	S8C1	Scope

	S8C2	Application
	S8C3	General requirements for external wall panels
	S8C4	Additional requirements for vertically spanning external wall panels adjacent to columns
Specification 9	**Cavity barriers for fire-protected timber**	
	S9C1	Scope
	S9C2	Requirements
Specification 10	**Fire-protected timber**	
	S10C1	Scope
	S10C2	General requirements
	S10C3	Massive timber
	S10C4	Form of test
	S10C5	Smaller specimen permitted
	S10C6	Acceptance criteria
Specification 11	**Smoke-proof walls in health-care and residential care buildings**	
	S11C1	Scope
	S11C2	Class 9a health-care buildings
	S11C3	Class 9c buildings
	S11C4	Doorways in smoke-proof walls
Specification 12	**Fire doors, smoke doors, fire windows and shutters**	
	S12C1	Scope
	S12C2	Fire doors
	S12C3	General requirements for smoke doors
	S12C4	Construction Deemed-to-Satisfy for smoke doors
	S12C5	Fire shutters
	S12C6	Fire windows
Specification 13	**Penetration of walls, floors and ceilings by services**	
	S13C1	Scope
	S13C2	Application
	S13C3	Metal pipe systems
	S13C4	Pipes penetrating sanitary compartments
	S13C5	Wires and cables
	S13C6	Electrical switches and outlets
	S13C7	Fire-stopping

Part C1 Fire resistance

Introduction to this Part

This Part focuses on minimising risk of illness, injury or loss of life due to fire in a building including during evacuation, reducing fire spread within and between buildings and minimising risk to the public and occupants of nearby buildings when a fire occurs.

Objectives

C1O1 Objective

[2019: CO1]

The Objective of Parts C1, C2, C3 and C4 is to—

(a) safeguard people from illness or injury due to a fire in a building; and

(b) safeguard occupants from illness or injury while evacuating a building during a fire; and

(c) facilitate the activities of emergency services personnel; and

(d) avoid the spread of fire between buildings; and

(e) protect *other property* from physical damage caused by structural failure of a building as a result of fire

Functional Statements

C1F1 Structural stability during a fire

[2019: CF1]

A building is to be constructed to maintain structural stability during fire to—

(a) allow occupants time to evacuate safely; and

(b) allow for *fire brigade* intervention; and

(c) avoid damage to *other property*.

C1F2 Prevention of fire spread

[2019: CF2]

A building is to be provided with safeguards to prevent fire spread—

(a) so that occupants have time to evacuate safely without being overcome by the effects of fire; and

(b) to allow for *fire brigade* intervention; and

(c) to *sole-occupancy units* providing sleeping accommodation; and

(d) to adjoining *fire compartments*; and

(e) between buildings.

Applications

C1F2(c) only applies to a Class 2 or 3 building or Class 4 part of a building.

Performance Requirements

C1P1 Structural stability during a fire

[2019: CP1]

A building must have elements which will, to the degree necessary, maintain structural stability during a fire appropriate to—

(a) the function or use of the building; and
(b) the *fire load*; and
(c) the potential *fire intensity*; and
(d) the *fire hazard*; and
(e) the height of the building; and
(f) its proximity to *other property*; and
(g) any active *fire safety systems* installed in the building; and
(h) the size of any *fire compartment*; and
(i) *fire brigade* intervention; and
(j) other elements they support; and
(k) the *evacuation time*.

C1P2 Spread of fire

[2019: CP2]

(1) A building must have elements which will, to the degree necessary, avoid the spread of fire—
(a) to *exits*; and
(b) to *sole-occupancy units* and *public corridors*; and
(c) between buildings; and
(d) in a building.

(2) Avoidance of the spread of fire referred to in (1) must be appropriate to—
(a) the function or use of the building; and
(b) the *fire load*; and
(c) the potential *fire intensity*; and
(d) the *fire hazard*; and
(e) the number of *storeys* in the building; and
(f) its proximity to *other property*; and
(g) any active *fire safety systems* installed in the building; and
(h) the size of any *fire compartment*; and
(i) *fire brigade* intervention; and
(j) other elements they support; and
(k) the *evacuation time*.

Applications

C1P2(1)(b) only applies to a Class 2 or 3 building or Class 4 part of a building.

C1P3 Spread of fire and smoke in health and residential care buildings

[2019: CP3]

A building must be protected from the spread of fire and smoke to allow sufficient time for the orderly evacuation of the building in an emergency.

Applications

C1P3 only applies to—

(a) a *patient care area* of a Class 9a *health-care building*; and

(b) a Class 9c building.

C1P4 Safe conditions for evacuation

[2019: CP4]

To maintain tenable conditions during occupant evacuation, a material and an assembly must, to the degree necessary, resist the spread of fire and limit the generation of smoke and heat, and any toxic gases likely to be produced, appropriate to—

(a) the *evacuation time*; and

(b) the number, mobility and other characteristics of occupants; and

(c) the function or use of the building; and

(d) any active *fire safety systems* installed in the building.

Applications

C1P4 applies to linings, materials and assemblies in a Class 2 to 9 building.

C1P5 Behaviour of concrete external walls in a fire

[2019: CP5]

A concrete *external wall* that could collapse as a complete panel (e.g. tilt-up and pre-cast concrete) must be designed so that in the event of fire within the building the likelihood of outward collapse is avoided.

Limitations

C1P5 does not apply to a building having more than two *storeys* above ground level.

C1P6 Fire protection of service equipment

[2019: CP6]

A building must have elements, which will, to the degree necessary, avoid the spread of fire from service equipment having—

(a) a high *fire hazard*; or

(b) a potential for explosion resulting from a high *fire hazard*.

C1P7 Fire protection of emergency equipment

[2019: CP7]

A building must have elements, which will, to the degree necessary, avoid the spread of fire so that emergency equipment provided in a building will continue to operate for a period of time necessary to ensure that the intended function of the

equipment is maintained during a fire.

C1P8 Fire protection of openings and penetrations

[2019: CP8]

Any building element provided to resist the spread of fire must be protected, to the degree necessary, so that an adequate level of performance is maintained—

(a) where openings, construction joints and the like occur; and

(b) where penetrations occur for building services.

C1P9 Fire brigade access

[2019: CP9]

Access must be provided to and around a building, to the degree necessary, for *fire brigade* vehicles and personnel to facilitate *fire brigade* intervention appropriate to—

(a) the function or use of the building; and

(b) the *fire load*; and

(c) the potential *fire intensity*; and

(d) the *fire hazard*; and

(e) any active *fire safety systems* installed in the building; and

(f) the size of any *fire compartment*.

Verification Methods

C1V1 Fire spread between buildings on adjoining allotments

[2019: CV1]

Compliance with C1P2(1)(c) to avoid the spread of fire between buildings on adjoining allotments is verified when it is calculated that—

(a) a building will not cause heat flux in excess of those set out in Column 2 of Table C1V1 at the location on an adjoining property set out in Column 1 of Table C1V1; and

(b) when located at the distances from the allotment boundary set out in Column 1 of Table C1V1, a building is capable of withstanding the heat flux set out in Column 2 of Table C1V1 without ignition.

Table C1V1: Fire spread between buildings on adjoining allotments

Column 1 (Location)	Column 2 (Heat flux (kW/m^2))
On boundary	80
1 m from boundary	40
3 m from boundary	20
6 m from boundary	10

C1V2 Fire spread between buildings on the same allotment

[2019: CV2]

Compliance with C1P2(1)(c) to avoid the spread of fire between buildings on the same allotment is verified when, for the distances between buildings set out in Column 1 of Table C1V2, it is calculated that a building—

(a) is capable of withstanding the heat flux set out in Column 2 of Table C1V2 without ignition; and

(b) will not cause heat flux in excess of those set out in Column 2 of Table C1V2.

Table C1V2: Fire spread between buildings on the same allotment

Column 1 (Distance between buildings on the same allotment (m))	Column 2 (Heat flux (kW/m^2))
0	80
2	40
6	20
12	10

C1V3 Fire spread via external walls

[2019: CV3]

Compliance with C1P2 to avoid the spread of fire via the *external wall* of a building is verified when—

(a) compliance with C1P2(1)(c) to avoid the spread of fire between buildings, where applicable, is verified in accordance with C1V1 or C1V2, as appropriate; and

(b) the *external wall* system—

(i) has been tested for external wall (EW) performance in accordance with AS 5113; and

(ii) has achieved the classification EW; and

(iii) if containing a cavity, incorporates cavity barriers and these cavity barriers have been included in the test performed under (i) at the perimeter of each floor; and

(c) in a building of Type A construction, the building is protected throughout by a sprinkler system (other than a FPAA101D or FPAA101H system) complying with Specification 17 and has—

(i) sprinkler protection to balconies, patios and terraces, and where overhead sprinkler coverage is not achieved alongside the *external wall*, sidewall sprinkler heads are provided at the *external wall* for the extent of the balcony, patio or terrace where overhead sprinkler coverage is not achieved; and

(ii) for a building with an *effective height* more than 25 m—

(A) monitored stop valves provided at each floor level arranged to allow the isolation of the floor level containing the stop valve while maintaining protection to the remainder of the building; and

(B) the sprinkler system being capable of providing sufficient flow to serve the design area required by AS 2118.1 for the relevant hazard class on each floor level plus the design area required by AS 2118.1 for the floor level above, except where the former level is either the floor level below the uppermost roof, or any floor level that is wholly below ground; and

(d) in a building of Type B construction, the building is—

(i) a Class 5, 6, 7 or 8 building or Class 4 part of a building; or

(ii) a Class 2, 3 or 9 building that—

(A) is protected throughout by a sprinkler system (other than a FPAA101D or FPAA101H system) complying with Specification 17; or

(B) has any openings in *external walls* separated by a slab or other horizontal construction complying with C3D7(1)(d) as if the building were of Type A construction.

C1V4 Fire Safety Verification Method

[2019: CV4, Sch. 7 - cl. 1.3]

(1) Compliance with C1P1, C1P2, C1P3, C1P4, C1P5, C1P6, C1P7, C1P8 and C1P9 is verified when a building is designed in accordance with—

(a) the requirements of (2), (3), (4), (5) and (6); and

(b) the Fire Safety Verification Method Standard.

(2) *Performance-based design brief (PBDB)*:

(a) When using this *Verification Method*, the fire safety engineer must undertake a *performance-based design brief (PBDB)* that must—

(i) involve all stakeholders relevant to the building design; and

(ii) outline the fire strategy to be adopted.

(b) While full agreement on all aspects of the *PBDB* is the preferred outcome, it is acknowledged that in some instances this may not be possible to obtain.

(c) In the event that full agreement cannot be achieved through the *PBDB*, dissenting views must be appropriately recorded and carried throughout the process and considered as part of the due processes of the *appropriate authority* when determining compliance and providing approval.

(d) Consideration of whether a peer review (by an independent fire safety engineer) of some or all of the proposed *Performance Solutions* and the supporting analysis is required or not, must be undertaken at this *PBDB* stage.

(3) Fire strategy:

(a) The *PBDB* must cover the fire safety strategy for the building, outlining the philosophy and approach that will be adopted to achieve the required level of performance.

(b) The fire safety strategy must pay particular attention to the evacuation strategy to be used and the management regimes necessary.

(4) Stakeholder involvement:

(a) The *PBDB* must be developed collaboratively by the relevant stakeholders in the particular project.

(b) The following parties must be involved:

(i) Client or client's representative (such as project manager).

(ii) Fire engineer.

(iii) Architect or designer.

(iv) Various specialist consultants.

(v) Fire service (public or private).

(vi) *Appropriate authority* (Authority Having Jurisdiction – subject to state/territory legislation).

(vii) Tenants or tenants representative for the proposed building (if available)

(viii) Building operations management (if available).

(c) Conducting a simple stakeholder analysis can be used to determine who must be involved in the *PBDB* process.

(d) This analysis must identify stakeholders with a high level of interest in the design process, and/or likely to be affected by the consequences of a fire should it occur in the building.

(5) Required level of safety:

(a) Given the absence of specific safety targets in the NCC and the qualitative nature of the NCC fire safety *Performance Requirements*, for this *Verification Method* to ensure the level of safety expected, the proposed building design must be at least equivalent to the relevant *Deemed-to-Satisfy Provisions*.

(b) As the NCC *Deemed-to-Satisfy Provisions* evolved originally from State and Territory regulations and are regularly updated to reflect technical advances and experience they are commonly accepted as providing an acceptable benchmark.

(c) It is accepted that the NCC *Deemed-to-Satisfy Provisions* reflect societal expectations in terms of fire safety, which address individual risk, societal risk and the robustness in the design by adopting a defence in depth approach.

(d) In the majority of *design scenarios* the *Verification Method* requires a demonstration that the proposed level of safety is at least equivalent to the *Deemed-to-Satisfy Provisions*.

(e) In relation to the required level of safety, the *PBDB* process must—

(i) identify the relevant *Deemed-to-Satisfy Provisions* to be used in the equivalency process to determine whether the relevant *Performance Requirements* have been met; and

(ii) consider the specific size, complexity and use of the building with regards to the *Deemed-to-Satisfy Provisions* to be used in the equivalency process; and

(iii) consider the specific occupant profile of the building, paying particular attention to occupants with a disability and the vulnerable, in regards to the *Deemed-to-Satisfy Provisions* to be used in the equivalency process.

(6) Final report: Once the analysis of all relevant *design scenarios* for all the required *Performance Solutions* has been completed, the fire safety engineer must prepare a final report that includes the following:

(a) The agreed *PBDB*.

(b) All modelling and analysis.

(c) Analysis required to demonstrate that the proposed building provides a level of safety at least equivalent to the relevant *Deemed-to-Satisfy Provisions*.

(d) Any other information required to clearly demonstrate that the building and its *fire safety system* satisfies the relevant *Performance Requirements* as set out in the Fire Safety Verification Method Standard.

Explanatory Information

When developing a *Performance Solution*, a *PBDB* is an important step in the process. It allows all relevant stakeholders to be involved in the development of the building design and its *fire safety system*.

A *PBDB* is a documented process that defines the scope of work for the fire engineering analysis. Its purpose is to set down the basis, as agreed by the relevant stakeholders, on which the fire safety analysis of the proposed building and its *Performance Solutions* will be undertaken.

Relevant stakeholders will vary from design to design. However, some examples of relevant stakeholders are: a fire safety engineer, architect, developer, client, *appropriate authority* (some state legislation prevents *appropriate authorities* from being involved in the design process), fire authority and other stakeholders that fire safety design may affect such as insurers. Further information on the relevant stakeholders is provided in the Fire Safety Verification Method Standard.

Guidance on the development of a *PBDB* is presented in the Australian Fire Engineering Guidelines.

Part C2 Fire resistance and stability

Introduction to this Part

This Part contains *Deemed-to-Satisfy Provisions* for Part C1. Its sets out Types of *fire-resisting* construction based on building height, size, use and other relevant factors, FRLs and *fire hazard properties*, which describe how certain materials react to fire. It also contains construction requirements to facilitate *fire brigade* intervention.

Deemed-to-Satisfy Provisions

C2D1 Deemed-to-Satisfy Provisions

[2019: C1.0]

(1) Where a *Deemed-to-Satisfy Solution* is proposed, *Performance Requirements* C1P1 to C1P9 are satisfied by complying with—

(a) C2D2 to C2D15, C3D2 to C3D15 and C4D2 to C4D17; and

(b) in a building containing an *atrium*, Part G3; and

(c) for a building containing an *occupiable outdoor area*, Part G6; and

(d) for additional requirements for Class 9b buildings, Part I1; and

(e) for *farm sheds*, Part I3.

(2) Where a *Performance Solution* is proposed, the relevant *Performance Requirements* must be determined in accordance with A2G2(3) and A2G4(3) as applicable.

C2D2 Type of construction required

[2019: C1.1]

SA C2D2(1)

(1) The minimum Type of *fire-resisting construction* of a building must be determined in accordance with Table C2D2, except as allowed for—

(a) certain Class 2, 3 or 9c buildings, in C2D6; and

(b) a Class 4 part of a building located on the top *storey*, in C2D4(2); and

(c) *open spectator stands* and indoor sports stadiums, in C2D8.

(2) Each building element must comply with Specification 5 as applicable.

SA C2D2(3)

SA C2D2(4)

Table C2D2: Type of construction required

Rise in storeys	Class of building 2, 3, 9	Class of building 5, 6, 7, 8
4 or more	A	A
3	A	B
2	B	C
1	C	C

C2D3 Calculation of rise in storeys

[2019: C1.2]

(1) The *rise in storeys* is the sum of the greatest number of *storeys* at any part of the *external walls* of the building and any *storeys* within the roof space—

(a) above the finished ground next to that part; or

(b) if part of the *external wall* is on the boundary of the allotment, above the natural ground level at the relevant part of the boundary.

(2) A *storey* is not counted if—

(a) it is situated at the top of the building and contains only heating, ventilating or lift equipment, water tanks, or similar service units or equipment; or

(b) it is situated partly below the finished ground and the underside of the ceiling is not more than 1 m above the average finished level of the ground at the *external wall*, or if the *external wall* is more than 12 m long, the average for the 12 m part where the ground is lowest.

(3) In a Class 7 or 8 building, a *storey* that has an average internal height of more than 6 m is counted as—

(a) one *storey* if it is the only *storey* above the ground; or

(b) 2 *storeys* in any other case.

(4) For the purposes of calculating the *rise in storeys* of a building—

(a) a *mezzanine* is regarded as a *storey* in that part of the building in which it is situated if its *floor area* is more than 200 m^2 or more than ⅓ of the *floor area* of the room, whichever is the lesser; and

(b) two or more *mezzanines* are regarded as a *storey* in that part of the building in which they are situated if they are at or near the same level and have an aggregate *floor area* more than 200 m^2 or more than ⅓ of the *floor area* of the room, whichever is the lesser.

C2D4 Buildings of multiple classification

[2019: C1.3]

(1) In a building of multiple classifications, the Type of construction *required* for the building is the most *fire-resisting* Type resulting from the application of Table C2D2 on the basis that the classification applying to the top *storey* applies to all *storeys*.

(2) In a building containing a Class 4 part on the top *storey*, for the purpose of (1), the classification applying to the top *storey* must be—

(a) when the Class 4 part occupies the whole of the top *storey*, the classification applicable to the next highest *storey*; or

(b) when the Class 4 part occupies part of the top *storey*, the classification applicable to the adjacent part.

C2D5 Mixed types of construction

[2019: C1.4]

A building may be of mixed Types of construction where it is separated in accordance with C3D8 and the Type of construction is determined in accordance with C2D2 or C2D4.

C2D6 Two storey Class 2, 3 or 9c buildings

[2019: C1.5]

A building having a *rise in storeys* of 2 may be of Type C construction if—

(a) it is a Class 2 or 3 building or a mixture of these classes and each *sole-occupancy unit* has—

(i) access to at least 2 *exits*; or

(ii) its own direct access to a road or *open space*; or

(b) it is a Class 9c building protected throughout with a sprinkler system (other than a FPAA101D or FPAA101H system) complying with Specification 17 and complies with the maximum compartment size specified in Table C3D3 for Type C construction.

C2D7 Class 4 parts of buildings

[2019: C1.6]

For the Type of construction *required* by C2D4, a Class 4 part of a building requires the same FRL for building elements and the same construction separating the Class 4 part from the remainder of the building as a Class 2 part in the same Type of construction.

C2D8 Open spectator stands and indoor sports stadiums

[2019: C1.7]

(1) An *open spectator stand* or indoor sports stadium may be of Type C construction and need not comply with the other provisions of this Part if it contains not more than one tier of seating, is of *non-combustible* construction, and has only changing rooms, sanitary facilities or the like below the tiered seating.

(2) In (1), one tier of seating means numerous rows of tiered seating incorporating cross-overs but within one viewing level.

C2D9 Lightweight construction

[2019: C1.8]

(1) *Lightweight construction* must comply with Specification 6 if it is used in a wall system—

(a) that is *required* to have an FRL; or

(b) for a lift *shaft*, stair *shaft* or service *shaft* or an *external wall* bounding a *public corridor* including a non *fire-isolated passageway* or non *fire-isolated ramp*, in a spectator stand, sports stadium, cinema or theatre, railway station, bus station or airport terminal.

(2) If *lightweight construction* is used for the *fire-resisting* covering of a steel column or the like, and if—

(a) the covering is not in continuous contact with the column, then the void must be filled solid, to a height of not less than 1.2 m above the floor to prevent indenting; and

(b) the column is liable to be damaged from the movement of vehicles, materials or equipment, then the covering must be protected by steel or other suitable material.

C2D10 Non-combustible building elements

[2019: C1.9]

(1) In a building *required* to be of Type A or B construction, the following building elements and their components must be *non-combustible*:

(a) *External walls* and *common walls*, including all components incorporated in them including the facade covering, framing and insulation.

(b) The flooring and floor framing of lift pits.

(c) Non-*loadbearing internal walls* where they are *required* to be *fire-resisting*.

(2) A *shaft*, being a lift, ventilating, pipe, garbage, or similar *shaft* that is not for the discharge of hot products of combustion, that is non-*loadbearing*, must be of *non-combustible* construction in—

(a) a building *required* to be of Type A construction; and

(b) a building *required* to be of Type B construction, subject to C3D11, in—

(i) a Class 2, 3 or 9 building; and

(ii) a Class 5, 6, 7 or 8 building if the *shaft* connects more than 2 *storeys*.

(3) A *loadbearing internal wall* and a *loadbearing fire wall*, including those that are part of a *loadbearing shaft*, must comply with Specification 5.

(4) The requirements of (1) and (2) do not apply to the following:

(a) Gaskets.

(b) Caulking.

(c) Sealants.

(d) Termite management systems.

(e) Glass, including laminated glass, and associated adhesives, including tapes.

(f) Thermal breaks associated with—

(i) glazing systems; or

(ii) *external wall* systems, where the thermal breaks—

(A) are no larger than necessary to achieve thermal objectives; and

(B) do not extend beyond one *storey*; and

(C) do not extend beyond one *fire compartment*.

(g) *Damp-proof courses*.

(h) Compressible fillers and backing materials, including those associated with articulation joints, closing gaps not wider than 50 mm.

(i) Isolated—

(i) construction packers and shims; or

(ii) blocking for fixing fixtures; or

(iii) fixings, including fixing accessories; or

(iv) acoustic mounts.

(j) Waterproofing materials applied to the external face, used below ground level and up to 250 mm above ground level.

(k) Joint trims and joint reinforcing tape and mesh of a width not greater than 50 mm.

(l) Weather sealing materials, applied to gaps not wider than 50 mm, used within and between concrete elements.

(m) Wall ties and other masonry components complying with AS 2699 Part 1 and Part 3 as appropriate, and associated with masonry wall construction.

(n) Reinforcing bars and associated minor elements that are wholly or predominately encased in concrete or grout.

(o) A paint, lacquer or a similar finish or coating.

(p) Adhesives, including tapes, associated with stiffeners for cladding systems.

(q) Fire-protective materials and components *required* for the protection of penetrations.

(5) The following materials, when entirely composed of itself, are *non-combustible* and may be used wherever a *non-combustible* material is *required*:

(a) Concrete.

(b) Steel, including metallic coated steel.

(c) Masonry, including mortar.

(d) Aluminium, including aluminium alloy.

(e) Autoclaved aerated concrete, including mortar.

(f) Iron.

(g) Terracotta.

(h) Porcelain.

(i) Ceramic.

(j) Natural stone.

(k) Copper.

(l) Zinc.

(m) Lead.

(n) Bronze.

(o) Brass.

(6) The following materials may be used wherever a *non-combustible* material is *required*:

(a) Plasterboard.

(b) Perforated gypsum lath with a normal paper finish.

(c) Fibrous-plaster sheet.

(d) Fibre-reinforced cement sheeting.

(e) Pre-finished metal sheeting having a *combustible* surface finish not exceeding 1 mm thickness and where the *Spread-of-Flame Index* of the product is not greater than 0.

(f) *Sarking-type materials* that do not exceed 1 mm in thickness and have a *Flammability Index* not greater than 5.

(g) Bonded laminated materials where—

(i) each lamina, including any core, is *non-combustible*; and

(ii) each adhesive layer does not exceed 1 mm in thickness and the total thickness of the adhesive layers does not exceed 2 mm; and

(iii) the *Spread-of-Flame Index* and the *Smoke-Developed Index* of the bonded laminated material as a whole do not exceed 0 and 3 respectively; and

(iv) when located externally, are fixed in accordance with C2D15.

Explanatory Information

For C2D10(4)(i), isolated refers to localised situations where these elements are used. For example, construction packers and shims used for levelling *window* frames at fixing points and blocking used to fix a handrail. Blocking an entire wall is not considered to be used in an isolated situation. Isolated fixings and fixing accessories may include, but are not limited to, screws, anchors, wall plugs, nails and washers.

Associated minor elements in C2D10(4)(n) refers to elements such as bar chairs, tie wire and spacers commonly used to support reinforcement in concrete construction.

C2D10(4)(p) applies only to adhesives and tapes associated with stiffeners that may be installed to prevent buckling, bowing or distortion of a cladding material. This provision does not allow for the use of adhesives and tapes as the primary method of support or fixing the cladding material. Refer also to C2D15.

C4D15 is a provision that necessitates the installation of fire-protective materials and components referred to in C2D10(4)(q).

NSW C2D11

C2D11 Fire hazard properties

[2019: C1.10]

(1) The *fire hazard properties* of the following internal linings, materials and assemblies within a Class 2 to 9 building must comply with Specification 7:

(a) Floor linings and floor coverings.

(b) Wall linings and ceiling linings.

(c) Air-handling ductwork.

(d) Lift cars.

(e) In Class 9b buildings used as a theatre, public hall or the like—

(i) fixed seating in the audience area or auditorium; and

(ii) a proscenium curtain *required* by Specification 32.

(f) Escalators, moving walkways and non-*required* non *fire-isolated stairways* or pedestrian ramps subject to

Specification 14.

(g) *Sarking-type materials*.

(h) Attachments to floors, ceilings, *internal walls*, *common walls*, *fire walls* and to internal linings of *external walls*.

(i) Other materials including insulation materials other than *sarking-type materials*.

(2) Paint or fire-retardant coatings must not be used to achieve compliance with the *required fire hazard properties*.

VIC C2D11(3)

(3) The requirements of (1) do not apply to a material or assembly if it is—

(a) plaster, cement render, concrete, terrazzo, ceramic tile or the like; or

(b) a *fire-protective covering*; or

(c) a timber-framed *window*; or

(d) a solid timber handrail or skirting; or

(e) a timber-faced door; or

(f) an electrical switch, socket-outlet, cover plate or the like; or

(g) a material used for—

(i) a roof insulating material applied in continuous contact with a substrate; or

(ii) an adhesive; or

(iii) a *damp-proof course*, *flashing*, caulking, sealing, ground moisture barrier, or the like; or

(h) a paint, varnish, lacquer or similar finish, other than nitro-cellulose lacquer; or

(i) a clear or translucent roof light of glass fibre-reinforced polyester if—

(i) the roof in which it is installed forms part of a single *storey* building *required* to be Type C construction; and

(ii) the material is used as part of the roof covering; and

(iii) it is not closer than 1.5 m from another roof light of the same type; and

(iv) each roof light is not more than 14 m^2 in area; and

(v) the area of the roof lights per 70 m^2 of roof surface is not more than 14 m^2; or

(j) a face plate or neck adaptor of supply and return air outlets of an air handling system; or

(k) a face plate or diffuser plate of light fitting and emergency *exit* signs and associated electrical wiring and electrical components; or

(l) a joinery unit, cupboard, shelving, or the like; or

(m) an attached non-building fixture and fitting such as—

(i) a curtain, blind, or similar decor, other than a proscenium curtain *required* by Specification 32; and

(ii) a whiteboard, *window* treatment or the like; or

(n) timber treads, risers, landings and associated supporting framework installed in accordance with D3D30 where the *Spread-of-Flame Index* and the *Smoke-Developed Index* of the timber does not exceed 9 and 8 respectively; or

(o) any other material that does not significantly increase the hazards of fire.

C2D12 Performance of external walls in fire

[2019: C1.11]

Concrete *external walls* that could collapse as complete panels (e.g. tilt-up and pre-cast concrete), in a building having a *rise in storeys* of not more than 2, must comply with Specification 8.

C2D13 Fire-protected timber: Concession

[2019: C1.13]

Fire-protected timber may be used wherever an element is *required* to be *non-combustible*, provided—

(a) the building is—

(i) a separate building; or

(ii) a part of a building—

(A) which only occupies part of a *storey*, and is separated from the remaining part by a *fire wall*; or

(B) which is located above or below a part not containing *fire-protected timber* and the floor between the adjoining parts is provided with an FRL not less than that prescribed for a *fire wall* for the lower *storey*; and

(b) the building has an *effective height* of not more than 25 m; and

(c) the building has a sprinkler system (other than a FPAA101D or FPAA101H system) throughout complying with Specification 17; and

(d) any insulation installed in the cavity of the timber building element to have an FRL is *non-combustible*; and

(e) cavity barriers are provided in accordance with Specification 9.

C2D14 Ancillary elements

[2019: C1.14]

An *ancillary element* must not be fixed, installed, attached to or supported by the concealed internal parts or external face of an *external wall* that is *required* to be *non-combustible* unless it is one of the following:

(a) An *ancillary element* that is *non-combustible*.

(b) A gutter, downpipe or other plumbing fixture or fitting.

(c) A flashing.

(d) A grate, grille or similar cover not more than 2 m^2 in area associated with a building service.

(e) An electrical switch, socket-outlet, cover plate or the like.

(f) A light fitting.

(g) A *required* sign.

(h) A sign other than one provided under (a) or (g) that—

(i) achieves a *group number* of 1 or 2; and

(ii) does not extend beyond one *storey*; and

(iii) does not extend beyond one *fire compartment*; and

(iv) is separated vertically from other signs permitted under (h) by at least 2 *storeys*.

(i) An awning, sunshade, canopy, blind or shading hood other than one provided under (a) that—

(i) meets the relevant requirements of Table S7C7 as for an internal element; and

(ii) serves a *storey*—

(A) at ground level; or

(B) immediately above a *storey* at ground level; and

(iii) does not serve an *exit*, where it would render the *exit* unusable in a fire.

(j) A part of a security, intercom or announcement system.

(k) Wiring.

(l) Waterproofing material installed in accordance with AS 4654.2 and applied to an adjacent floor surface, including vertical upturn, or a roof surface.

(m) Collars, sleeves and insulation associated with service installations.

(n) Screens applied to vents, weepholes and gaps complying with AS 3959.

(o) Wiper and brush seals associated with doors, windows or other openings.

(p) A gasket, caulking, sealant or adhesive directly associated with (a) to (o).

Limitations

C2D14 does not apply to *ancillary elements* fixed, installed or attached to the internal face or lining of an *external wall*.

Notes

C2D14 does not prevent the mounting of domestic air-conditioning condenser units on *external walls*.

Explanatory Information

Ancillary elements fixed, installed or attached to the internal face or lining of an *external wall* may be subject to other provisions such as C2D11.

C2D15 Fixing of bonded laminated cladding panels

[New for 2022]

(1) In a building *required* to be of Type A or B construction, externally located bonded laminated cladding panels must have all layers of cladding mechanically supported or restrained to the supporting frame.

(2) An externally located bonded laminated cladding panel need not comply with (1) if it is one of the following:

(a) A laminated glass system.

(b) Layered plasterboard product.

(c) Perforated gypsum lath with a normal paper finish.

(d) Fibrous-plaster sheet.

(e) Fibre-reinforced cement sheeting.

(f) A component of a garage door.

Notes

For C2D15(1), mechanical support or restraint means fixing that does not solely rely on chemical adhesive and includes concealed fixing systems such as cassette fixing, channel-type fixing and face fixing.

Explanatory Information

For structural requirements relating to the fixing of cladding, refer to Section B. For most cladding systems, the requirements of Section B will necessitate mechanical fixing of the cladding panel to the supporting frame.

SA C2D16

Part C3 Compartmentation and separation

Introduction to this Part

This Part contains *Deemed-to-Satisfy Provisions* for Part C1. It covers compartmentation to limit fire size and spread, separation to limit fire spread between *fire compartments*, parts with different classifications, stairways, lift *shafts*, equipment, electricity supplies and *public corridors*. It also contains construction requirements to facilitate *fire brigade* intervention.

Deemed-to-Satisfy Provisions

C3D1 Deemed-to-Satisfy Provisions

[2019: C2.0]

(1) Where a *Deemed-to-Satisfy Solution* is proposed, *Performance Requirements* C1P1 to C1P9 are satisfied by complying with—

(a) C2D2 to C2D15, C3D2 to C3D15 and C4D2 to C4D17; and

(b) in a building containing an *atrium*, Part G3; and

(c) for a building containing an *occupiable outdoor area*, Part G6; and

(d) for additional requirements for Class 9b buildings, Part I1; and

(e) for *farm sheds*, Part I3.

(2) Where a *Performance Solution* is proposed, the relevant *Performance Requirements* must be determined in accordance with A2G2(3) and A2G4(3) as applicable.

C3D2 Application of Part

[2019: C2.1]

(1) C3D3, C3D4 and C3D5 do not apply to a *carpark* provided with a sprinkler system (other than a FPAA101D or FPAA101H system) complying with Specification 17, an *open-deck carpark* or an *open spectator stand*.

(2) C3D13(1)(e) does not apply to a Class 8 *electricity network substation*.

C3D3 General floor area and volume limitations

[2019: C2.2]

(1) The size of any *fire compartment* or *atrium* in a Class 5, 6, 7, 8 or 9 building must not exceed the relevant maximum *floor area* nor the relevant maximum *volume* set out in Table C3D3 and C3D6 except as permitted in C3D4.

(2) A part of a building which contains only heating, ventilating, or lift equipment, water tanks, or similar service units is not counted in the *floor area* or *volume* of a *fire compartment* or *atrium* if it is situated at the top of the building.

(3) In a building containing an *atrium*, the part of the *atrium well* bounded by the perimeter of the openings in the floors and extending from the level of the first floor above the *atrium* floor to the roof covering is not counted in the *volume* of the *atrium* for the purposes of this clause.

Table C3D3: Maximum size of fire compartments or atria

Classification	Type A construction	Type B construction	Type C construction
5, 9b or 9c	Max *floor area*—8 000 m^2	Max *floor area*—5 500 m^2	Max *floor area*—3 000 m^2
	Max *volume*—48 000 m^3	Max *volume*—33 000 m^3	max *volume*—18 000 m^3

Classification	Type A construction	Type B construction	Type C construction
6, 7, 8 or 9a (except for *patient care areas*)	Max *floor area*—5 000 m^2	Max *floor area*—3 500 m^2	Max *floor area*—2 000 m^2
	Max *volume*—30 000 m^3	Max *volume*—21 000 m^3	Max *volume*—12 000 m^3

Table Notes

See C3D6 for maximum size of compartments in *patient care areas* in Class 9a *health-care buildings*.

C3D4 Large isolated buildings

[2019 C2.3]

The size of a *fire compartment* in a building may exceed that specified in Table C3D3 where—

(a) the building does not exceed 18 000 m^2 in *floor area* nor exceed 108 000 m^3 in *volume*, if—

(i) the building is Class 7 or 8 and—

(A) contains not more than 2 *storeys*; and

(B) is provided with open space complying with C3D5(1) not less than 18 m wide around the building; or

(ii) the building is Class 5, 6, 7, 8 or 9 and is—

(A) protected throughout with a sprinkler system complying with Specification 17; and

(B) provided with a perimeter vehicular access complying with C3D5(2); or

(b) the building is Class 5, 6, 7, 8 or 9 and exceeds 18 000 m^2 in *floor area* or 108 000 m^3 in *volume*, if it is—

(i) protected throughout with a sprinkler system complying with Specification 17; and

(ii) provided with a perimeter vehicular access complying with C3D5(2); or

(c) there is more than one building on the allotment and—

(i) each building complies with (a) or (b); or

(ii) if the buildings are closer than 6 m to each other they are regarded as one building and collectively comply with (a) or (b).

C3D5 Requirements for open spaces and vehicular access

[2019: C2.4]

(1) An open space *required* by C3D4 must—

(a) be wholly within the allotment except that any road, river, or public place adjoining the allotment, but not the farthest 6 m of it may be included; and

(b) include vehicular access in accordance with (2); and

(c) not be used for the storage or processing of materials; and

(d) not be built upon, except for guard houses and service structures (such as electricity substations and pump houses) which may encroach upon the width of the space if they do not unduly impede fire-fighting at any part of the perimeter of the allotment or unduly add to the risk of spread of fire to any building on an adjoining allotment.

(2) Vehicular access *required* by this Part—

(a) must be capable of providing continuous access for emergency vehicles to enable travel in a forward direction from a public road around the entire building; and

(b) must have a minimum unobstructed width of 6 m with no part of its furthest boundary more than 18 m from the building and in no part of the 6 m width be built upon or used for any purpose other than vehicular or pedestrian movement; and

(c) must provide reasonable pedestrian access from the vehicular access to the building; and

(d) must have a load bearing capacity and unobstructed height to permit the operation and passage of *fire brigade* vehicles; and

(e) must be wholly within the allotment except that a public road complying with (a), (b), (c) and (d) may serve as

the vehicular access or part thereof.

C3D6 Class 9 buildings

[2019: C2.5]

(1) A Class 9a *health-care building* must comply with the following:

(a) *patient care areas* must be divided into *fire compartments* not exceeding 2000 m^2.

(b) A *fire compartment* must be separated from the remainder of the building by *fire walls* and—

(i) in Type A construction—floors and roof or ceiling as *required* in Specification 5; and

(ii) in Type B construction—floors with an FRL of not less than 120/120/120 and with the openings in *external* walls bounding *patient care areas* being vertically separated in accordance with the requirements of C3D7 as if the building were of Type A construction.

(c) *Ward areas*—

(i) where the *floor area* exceeds 1000 m^2, must be divided into *floor areas* not more than 1000 m^2 by walls with an FRL of not less than 60/60/60; and

(ii) where the *floor area* exceeds 500 m^2, must be divided into *floor areas* not more than 500 m^2 by smoke-proof walls complying with Specification 11; and

(iii) where the *floor area* is not more than 500 m^2, must be separated from the remainder of the *patient care area* by smoke-proof walls complying with Specification 11; and

(iv) where division of *ward areas* by *fire-resisting* walls under (a) or (c)(i) is not *required*, any smoke-proof wall *required* under (c)(ii) or (iii) must have an FRL of not less than 60/60/60.

(d) *Treatment areas*—

(i) where the *floor area* exceeds 1000 m^2, must be divided into *floor areas* not more than 1000 m^2 by smoke-proof walls complying with Specification 11; and

(ii) where the *floor area* is not more than 1000 m^2, must be separated from the remainder of the *patient care area* by smoke-proof walls complying with Specification 11.

(e) Ancillary use areas located within a *patient care area* and containing equipment or materials that are a high potential *fire hazard*, must be separated from the remainder of the *patient care area* by walls with an FRL of not less than 60/60/60.

(f) The ancillary use areas referred to in (e) include, but are not limited to, the following:

(i) A kitchen and related food preparation areas having a combined *floor area* of more than 30 m^2.

(ii) A room containing a hyperbaric facility (pressure chamber).

(iii) A room used predominantly for the storage of medical records having a *floor area* of more than 10 m^2.

(iv) A laundry, where items of equipment are of the type that are potential fire sources (e.g. gas fire dryers).

(g) A wall *required* by (e) to separate ancillary use areas from the remainder of the building must extend to the underside of—

(i) the floor above; or

(ii) a *non-combustible* roof covering; or

(iii) a ceiling having a *resistance to the incipient spread of fire* to the space above itself of not less than 60 minutes.

(h) Openings in walls *required* by (c) and (e) to have an FRL must be protected as follows:

(i) Doorways—*self-closing* or *automatic* closing –/60/30 fire doors.

(ii) Windows—*automatic* or permanently fixed closed –/60/– fire windows or –/60/– *automatic* fire shutters.

(iii) Other openings—construction having an FRL not less than –/60/–.

(2) In a building containing a Class 9b *early childhood centre*—

(a) unless the Class 9b *early childhood centre* is the only use in the building, it must be separated from the remainder of the building by walls and/or floors with an FRL not less than that *required* for a *fire wall*; and

(b) each *storey* within the Class 9b *early childhood centre* must contain not less than 2 *fire compartments*.

NSW C3D6(3)

(3) A Class 9c building must comply with the following:

(a) A building must be divided into areas not more than 500 m^2 by smoke-proof walls complying with Specification 11.

(b) A *fire compartment* must be separated from the remainder of the building by *fire walls* and, notwithstanding C3D8 and Specification 5, floors with an FRL of not less than 60/60/60.

(c) Internal walls (other than those bounding lift and stair shafts) supported by floors provided in accordance with (b) need not comply with Specification 5 if they have an FRL not less than 60/–/–.

(d) Ancillary use areas containing equipment or materials that are a high potential *fire hazard*, must be separated from the *sole-occupancy units* by smoke-proof walls complying with Specification 11.

(e) The ancillary use areas referred to in (d) include, but are not limited to, the following:

(i) A kitchen and related food preparation areas having a combined *floor area* of more than 30 m^2.

(ii) A laundry, where items of equipment are of the type that are potential fire sources (e.g. gas fired dryers).

(iii) Storage rooms greater than 10 m^2 used predominantly for the storage of administrative records.

(f) Openings in *fire walls* must be protected as follows:

(i) Doorways —*self-closing* or *automatic* closing –/60/30 fire doors.

(ii) Windows —*automatic* or permanently fixed closed –/60/– fire windows or –/60/– *automatic* fire shutters.

(iii) Other openings — construction having an FRL not less than –/60/–.

Exemptions

C3D6(2) does not apply to a Class 9b *early childhood centre*—

(a) wholly within a *storey* that provides direct egress to a road or *open space*; or

(b) with a *rise in storeys* of not more than 2, where the Class 9b *early childhood centre* is the only use in the building.

C3D7 Vertical separation of openings in external walls

[2019: C2.6]

(1) If in a building of Type A construction, any part of a *window* or other opening in an *external wall* is above another opening in the *storey* next below and its vertical projection falls no further than 450 mm outside the lower opening (measured horizontally), the openings must be separated by—

(a) a spandrel which—

(i) is not less than 900 mm in height; and

(ii) extends not less than 600 mm above the upper surface of the intervening floor; and

(iii) is of *non-combustible* material having an FRL of not less than 60/60/60; or

(b) part of a *curtain wall* or *panel wall* that complies with (a); or

(c) construction that complies with (a) behind a *curtain wall* or *panel wall* and has any gaps packed with a *non-combustible* material that will withstand thermal expansion and structural movement of the walling without the loss of seal against fire and smoke; or

(d) a slab or other horizontal construction that—

(i) projects outwards from the external face of the wall not less than 1100 mm; and

(ii) extends along the wall not less than 450 mm beyond the openings concerned; and

(iii) is *non-combustible* and has an FRL of not less than 60/60/60.

(2) The requirements of (1) do not apply to—

(a) an *open-deck carpark*; or

(b) an *open spectator stand*; or

(c) a building which has a sprinkler system (other than a FPAA101D or FPAA101H system) complying with

Specification 17 installed throughout; or

(d) openings within the same stairway; or

(e) openings in *external walls* where the floor separating the *storeys* does not require an FRL with respect to *integrity* and *insulation*.

(3) For the purposes of C3D7, *window* or other opening means that part of the *external wall* of a building that does not have an FRL of 60/60/60 or greater.

C3D8 Separation by fire walls

[2019: C2.7]

(1) Construction — A *fire wall* must be constructed in accordance with the following:

(a) The *fire wall* has the relevant FRL prescribed by Specification 5 for each of the adjoining parts, and if these are different, the greater FRL, except where S5C19(3)(c)(i), S5C22(3)(c)(i) and S5C25(3)(c)(i) permit a lower FRL on the *carpark* side.

(b) Any openings in a *fire wall* must not reduce the FRL *required* by Specification 5 for the *fire wall*, except where permitted by the *Deemed-to-Satisfy Provisions* of Part C4.

(c) Building elements, other than roof battens with dimensions of 75 mm x 50 mm or less or *sarking-type material*, must not pass through or cross the *fire wall* unless the *required fire-resisting* performance of the *fire wall* is maintained.

(2) Separation of buildings — A part of a building separated from the remainder of the building by a *fire wall* may be treated as a separate building for the purposes of the *Deemed-to-Satisfy Provisions* of Sections C, D and E if it is constructed in accordance with (1) and the following:

(a) The *fire wall* extends through all *storeys* and spaces in the nature of *storeys* that are common to that part and any adjoining part of the building.

(b) The *fire wall* is carried through to the underside of the roof covering.

(c) Where the roof of one of the adjoining parts is lower than the roof of the other part, the *fire wall* extends to the underside of—

(i) the covering of the higher roof, or not less than 6 m above the covering of the lower roof; or

(ii) the lower roof if it has an FRL not less than that of the *fire wall* and no openings closer than 3 m to any wall above the lower roof; or

(iii) the lower roof if its covering is *non-combustible* and the lower part has a sprinkler system (other than a FPAA101D or FPAA101H system) complying with Specification 17.

(3) Separation of *fire compartments* — A part of a building separated from the remainder of the building by a *fire wall* may be treated as a separate *fire compartment* if it is constructed in accordance with (a) and the *fire wall* extends to the underside of—

(a) a floor having an FRL *required* for a *fire wall*; or

(b) the roof covering.

C3D9 Separation of classifications in the same storey

[2019: C2.8]

(1) If a building has parts of different classifications located alongside one another in the same *storey*—

(a) each building element in that *storey* must have the higher FRL prescribed in Specification 5 for that element for the classifications concerned; or

(b) the parts must be separated in that *storey* by a *fire wall*.

(2) A *fire wall required* by (1)(b) must have the FRL prescribed in accordance with Specification 5 as applicable for that element for the Type of construction and the classifications concerned.

(3) For the purposes of (2), the FRL in Specification 5 must be either—

(a) the higher FRL prescribed in Table S5C11d or S5C21d; or

(b) the FRL prescribed in Table S5C24c.

(4) For the purposes of (1), where one part is a *carpark* complying with S5C19, S5C22 or S5C25, the parts may be separated by a *fire wall* complying with S5C19(3)(c), S5C22(3)(c) or S5C25(3)(c) as appropriate.

C3D10 Separation of classifications in different storeys

[2019: C2.9]

If parts of different classification are situated one above the other in adjoining *storeys* they must be separated as follows:

(a) Type A construction — The floor between the adjoining parts must have an FRL of not less than that prescribed in Specification 5 for the classification of the lower *storey*.

(b) Type B or C construction — If one of the adjoining parts is of Class 2, 3 or 4, the floor separating the part from the *storey* below must—

(i) be a floor/ceiling system incorporating a ceiling which has a *resistance to the incipient spread of fire* to the space above itself of not less than 60 minutes; or

(ii) have an FRL of at least 30/30/30; or

(iii) have a *fire-protective covering* on the underside of the floor, including beams incorporated in it, if the floor is *combustible* or of metal.

C3D11 Separation of lift shafts

[2019: C2.10]

(1) Any lift connecting more than 2 *storeys*, or more than 3 *storeys* if the building is sprinklered, (other than lifts which are wholly within an *atrium*) must be separated from the remainder of the building by enclosure in a *shaft* in which—

(a) in a building *required* to be of Type A construction — the walls have the relevant FRL prescribed by Specification 5; and

(b) in a building *required* to be of Type B construction — the walls—

(i) if *loadbearing*, have the relevant FRL prescribed by Table S5C21e; or

(ii) if non-*loadbearing*, be of *non-combustible* construction.

(2) Any lift in a *patient care area* in a Class 9a *health-care building* or a *resident use area* in Class 9c building must be separated from the remainder of the building by a *shaft* having an FRL of not less than—

(a) in a building of Type A or B construction — 120/120/120; or

(b) in a building of Type C construction — 60/60/60.

(3) An emergency lift must be contained within a *fire-resisting shaft* having an FRL of not less than 120/120/120.

(4) Openings for lift landing doors and services must be protected in accordance with the *Deemed-to-Satisfy Provisions* of Part C4.

C3D12 Stairways and lifts in one shaft

[2019: C2.11]

A stairway and lift must not be in the same *shaft* if either the stairway or the lift is *required* to be in a *fire-resisting shaft*.

C3D13 Separation of equipment

[2019: C2.12]

(1) Equipment other than that described in (2) and (3) must be separated from the remainder of the building with construction complying with (4), if that equipment comprises—

(a) lift motors and lift control panels; or

(b) emergency generators used to sustain emergency equipment operating in the emergency mode; or

(c) central smoke control plant; or

(d) *boilers*; or

(e) a *battery system* installed in the building that has a total voltage of 12 volts or more and a storage capacity of 200 kWh or more.

(2) Equipment need not be separated in accordance with (1) if the equipment comprises—

(a) smoke control exhaust fans located in the air stream which are constructed for high temperature operation in accordance with Specification 21; or

(b) stair pressurising equipment installed in compliance with the relevant provisions of AS 1668.1; or

(c) a lift installation without a machine-room; or

(d) equipment otherwise adequately separated from the remainder of the building.

(3) Separation of on-site fire pumps must comply with the requirements of AS 2419.1.

(4) Separating construction must have—

(a) except as provided by (b)—

(i) an FRL as *required* by Specification 5, but not less than 120/120/120; and

(ii) any doorway protected with a *self-closing* fire door having an FRL of not less than –/120/30; or

(b) when separating a lift *shaft* and lift motor room, an FRL not less than 120/–/–.

C3D14 Electricity supply system

[2019: C2.13]

(1) An electricity substation located within a building must—

(a) be separated from any other part of the building by construction having an FRL of not less than 120/120/120; and

(b) have any doorway in that construction protected with a *self-closing* fire door having an FRL of not less than –/120/30.

(2) A main switchboard located within the building which sustains emergency equipment operating in the emergency mode must—

(a) be separated from any other part of the building by construction having an FRL of not less than 120/120/120; and

(b) have any doorway in that construction protected with a *self-closing* fire door having an FRL of not less than –/120/30.

(3) Subject to (4), electrical conductors must—

(a) have a classification in accordance with AS/NZS 3013 of not less than—

(i) if located in a position that could be subject to damage by motor vehicles — WS53W; or

(ii) otherwise — WS52W; or

(b) be enclosed or otherwise protected by construction having an FRL of not less than 120/120/120.

(4) The requirements of (3) only apply to electrical conductors located within a building that supply—

(a) a substation located within the building which supplies a main switchboard covered by (2); or

(b) a main switchboard covered by (2).

(5) Where emergency equipment is *required* in a building, all switchboards in the electrical installation, which sustain the electricity supply to the emergency equipment, must be constructed so that emergency equipment switchgear is separated from non-emergency equipment switchgear by metal partitions designed to minimise the spread of a fault from the non-emergency equipment switchgear.

(6) For the purposes of (5), emergency equipment includes but is not limited to the following:

(a) Fire hydrant booster pumps.

(b) Pumps for *automatic* sprinkler systems, water spray, chemical fluid suppression systems or the like.

(c) Pumps for fire hose reels where such pumps and fire hose reels form the sole means of fire protection in the building.

(d) Air handling systems designed to exhaust and control the spread of fire and smoke.

(e) Emergency lifts.

(f) Control and indicating equipment.

(g) Emergency warning and intercom systems.

C3D15 Public corridors in Class 2 and 3 buildings

[2019: C2.14]

In a Class 2 or 3 building, a *public corridor*, if more than 40 m in length, must be divided at intervals of not more than 40 m with smoke-proof walls complying with S11C2.

SA C3D16

SA C3D17

Part C4 Protection of openings

Introduction to this Part

This Part contains *Deemed-to-Satisfy Provisions* for Part C1. It covers the protection of openings such as *windows*, doors, services and construction joints to reduce the risk of fire spread within or between buildings.

Deemed-to-Satisfy Provisions

C4D1 Deemed-to-Satisfy Provisions

[2019: C3.0]

(1) Where a *Deemed-to-Satisfy Solution* is proposed, *Performance Requirements* C1P1 to C1P9 are satisfied by complying with—

(a) C2D2 to C2D15, C3D2 to C3D15 and C4D2 to C4D17; and

(b) in a building containing an *atrium*, Part G3; and

(c) for a building containing an *occupiable outdoor area*, Part G6; and

(d) for additional requirements for Class 9b buildings, Part I1; and

(e) for *farm sheds*, Part I3.

(2) Where a *Performance Solution* is proposed, the relevant *Performance Requirements* must be determined in accordance with A2G2(3) and A2G4(3) as applicable.

C4D2 Application of Part

[2019: C3.1]

(1) The *Deemed-to-Satisfy Provisions* of this Part do not apply to the following:

(a) Control joints, weep holes and the like in *external walls* of masonry construction and joints between panels in *external walls* of pre-cast concrete panel construction if, in all cases they are not larger than necessary for the purpose.

(b) *Non-combustible* ventilators for subfloor or cavity ventilation, if each does not exceed 45 000 mm^2 in face area and is spaced not less than 2 m from any other ventilator in the same wall.

(c) Openings in the vertical plane formed between building elements at the construction edge or perimeter of a balcony or verandah, colonnade, terrace, or the like.

(d) In a *carpark* floor other than a floor that separates a part not used as a *carpark*, and subject to (e), the following openings in a *carpark* floor:

(i) Service penetrations.

(ii) Openings formed by a vehicle ramp.

(e) The requirements of (d) only apply where the connected *carpark* levels comply as a single *fire compartment* for the purposes of all other requirements of the *Deemed-to-Satisfy Provisions* of Sections C, D and E.

(2) For the purposes of the *Deemed-to-Satisfy Provisions* of this Part, openings in building elements *required* to be *fire-resisting* include doorways, *windows* (including any associated fanlight), infill panels and fixed or openable glazed areas that do not have the *required* FRL.

(3) For the purposes of the *Deemed-to-Satisfy Provisions* of this Part, openings, other than those covered under (1)(c), between building elements such as columns, beams and the like, in the plane formed at the construction edge or perimeter of the building, are deemed to be openings in an *external wall*.

C4D3 Protection of openings in external walls

[2019: C3.2]

(1) Subject to (2), openings in an *external wall* that is *required* to have an FRL must be protected in accordance with C4D5, and if wall-wetting sprinklers are used, they must be located externally.

(2) The requirements of (1) only apply if the distance between the opening and the *fire-source feature* to which it is exposed is less than—

(a) 3 m from a side or rear boundary of the allotment; or

(b) 6 m from the far boundary of a road, river, lake or the like adjoining the allotment, if not located in a *storey* at or near ground level; or

(c) 6 m from another building on the allotment that is not Class 10.

(3) Openings *required* to be protected under (1), must not occupy more than 1/3 of the area of the *external wall* of the *storey* in which they are located unless they are in a Class 9b building used as an *open spectator stand*.

C4D4 Separation of external walls and associated openings in different fire compartments

[2019: C3.3]

The distance between parts of *external walls* and any openings within them in different *fire compartments* separated by a *fire wall* must not be less than that set out in Table C4D4, unless—

(a) those parts of each wall have an FRL not less than 60/60/60; and

(b) any openings are protected in accordance with C4D5.

Table C4D4: Distance between external walls and associated openings in different fire compartments

Angle between walls	Minimum distance (m)
0° (walls opposite)	6
more than 0° to 45°	5
more than 45° to 90°	4
more than 90° to 135°	3
more than 135° to less than 180°	2
180° or more	Nil

C4D5 Acceptable methods of protection

[2019: C3.4]

(1) Where protection is *required*, doorways, *windows* and other openings must be protected as follows:

(a) Doorways—

(i) internal or external wall-wetting sprinklers as appropriate used with doors that are *self-closing* or *automatic* closing; or

(ii) –/60/30 fire doors that are *self-closing* or *automatic* closing.

(b) *Windows*—

(i) internal or external wall-wetting sprinklers as appropriate used with *windows* that are *automatic* closing or permanently fixed in the closed position; or

(ii) –/60/– fire *windows* that are *automatic* closing or permanently fixed in the closed position; or

(iii) –/60/– *automatic* closing fire shutters.

(c) Other openings—

(i) excluding voids — internal or external wall-wetting sprinklers, as appropriate; or

(ii) construction having an FRL not less than –/60/–.

(2) Fire doors, fire *windows* and fire shutters must comply with Specification 12.

C4D6 Doorways in fire walls

[2019: C3.5]

(1) The aggregate width of openings for doorways in a *fire wall*, which are not part of a *horizontal exit*, must not exceed ½ of the length of the *fire wall*, and each doorway must be protected by—

(a) 2 fire doors or fire shutters, one on each side of the doorway, each of which has an FRL of not less than ½ that *required* by Specification 5 for the *fire wall* except that each door or shutter must have an *insulation* level of at least 30; or

(b) a fire door on one side and a fire shutter on the other side of the doorway, each of which complies with (a); or

(c) a single fire door or fire shutter which has an FRL of not less than that *required* by Specification 5 for the *fire wall* except that each door or shutter must have an *insulation* level of at least 30.

(2) A fire door or fire shutter *required* by (1)(a), (b) or (c) must be *self-closing*, or *automatic* closing in accordance with (3) and (4).

(3) The *automatic* closing operation *required* by (2) must be initiated by the activation of a smoke detector, or any other detector deemed suitable in accordance with AS 1670.1 if smoke detectors are unsuitable in the atmosphere, installed in accordance with the relevant provisions of AS 1670.1 and located on each side of the *fire wall* not more than 1.5 m horizontal distance from the opening.

(4) Where any other *required* suitable fire alarm system, including a sprinkler system (other than a FPAA101D system) complying with Specification 17, is installed in the building, activation of the system in either *fire compartment* separated by the *fire wall* must also initiate the *automatic* closing operation.

C4D7 Sliding fire doors

[2019: C3.6]

(1) If a doorway in a *fire wall* is fitted with a sliding fire door which is open when the building is in use—

(a) it must be held open with an electromagnetic device, which when de-activated in accordance with (2) and (3), allows the door to be fully closed in not less than 20 seconds and not more than 30 seconds after release; and

(b) in the event of power failure to the door — the door must fail safe in the closed position in accordance with (a); and

(c) an audible warning device must be located near the doorway and a red flashing warning light of adequate intensity on each side of the doorway must be activated in accordance with (2) and (3); and

(d) signs must be installed on each side of the doorway located directly over the opening stating, in capital letters not less than 50 mm high in a colour contrasting with the background:

WARNING — SLIDING FIRE DOOR

(2) The electromagnetic device *required* by (1)(a) must be de-activated and the warning system activated by heat or smoke detectors, as appropriate, installed in accordance with AS 1905.1 and the relevant provisions of AS 1670.1.

(3) Where any other *required* suitable fire alarm system, including a sprinkler system (other than a FPAA101D system) complying with Specification 17, is installed in the building, activation in either *fire compartment* separated by the *fire wall* must also de-activate the electromagnetic device and activate the warning system.

C4D8 Protection of doorways in horizontal exits

[2019: C3.7]

(1) A doorway that is part of a *horizontal exit* must be protected by either—

(a) a single fire door that has an FRL of not less than that *required* by Specification 5 for the *fire wall* except that the door must have an *insulation* level of at least 30; or

(b) in a Class 7 or 8 building — 2 fire doors, one on each side of the doorway, each with an FRL of not less than ½ that *required* by Specification 5 for the *fire wall* except that each door must have an *insulation* level of at least

30.

(2) Each door *required* by (1) must be *self-closing*, or *automatic*-closing in accordance with the following:

(a) The *automatic*-closing operation must be initiated by the activation of a smoke detector, or any other detector deemed suitable in accordance with AS 1670.1 if smoke detectors are unsuitable in the atmosphere, installed in accordance with the relevant provisions of AS 1670.1 and located on each side of the *fire wall* not more than 1.5 m horizontal distance from the opening.

(b) Where any other *required* suitable fire alarm system, including a sprinkler system (other than a FPAA101D system) complying with Specification 17, is installed in the building, activation of the system in either *fire compartment* separated by the *fire wall* must also initiate the *automatic*-closing operation.

C4D9 Openings in fire-isolated exits

[2019: C3.8]

(1) Doorways that open to *fire-isolated stairways*, *fire-isolated passageways* or *fire-isolated ramps*, and are not doorways opening to a road or *open space*, must be protected by –/60/30 fire doors that are *self-closing*, or *automatic* closing in accordance with (2) and (3).

(2) The *automatic*-closing operation *required* by (1) must be initiated by the activation of a smoke detector, or any other detector deemed suitable in accordance with AS 1670.1 if smoke detectors are unsuitable in the atmosphere, installed in accordance with the relevant provisions of AS 1670.1 and located not more than 1.5 m horizontal distance from the approach side of the doorway.

(3) Where any other *required* suitable fire alarm system, including a sprinkler system (other than a FPAA101D system) complying with Specification 17, is installed in the building, activation of the system must also initiate the *automatic*-closing operation.

(4) A *window* in an *external wall* of a *fire-isolated stairway*, *fire-isolated passageway* or *fire-isolated ramp* must be protected in accordance with C4D5 if it is within 6 m of, and exposed to, a *window* or other opening in a wall of the same building, other than in the same fire-isolated enclosure.

C4D10 Service penetrations in fire-isolated exits

[2019: C3.9]

Fire-isolated *exits* must not be penetrated by any services other than—

(a) electrical wiring permitted by D3D8(6) to be installed within the *exit*; or

(b) ducting associated with a pressurisation system if it—

(i) is constructed of material having an FRL of not less than –/120/60 where it passes through any other part of the building; and

(ii) does not open into any other part of the building; or

(c) for fire services, water supply and test drain pipes.

C4D11 Openings in fire-isolated lift shafts

[2019: C3.10]

(1) Doorways — If a lift *shaft* is *required* to be fire-isolated, an entrance doorway to that *shaft* must be protected by –/60/– fire doors that—

(a) comply with AS 1735.11; and

(b) are set to remain closed except when discharging or receiving passengers, goods or vehicles.

(2) Lift indicator panels — A lift call panel, indicator panel or other panel in the wall of a fire-isolated lift *shaft* must be backed by construction having an FRL of not less than –/60/60 if it exceeds 35 000 mm^2 in area.

C4D12 Bounding construction: Class 2 and 3 buildings and Class 4 parts

[2019: C3.11]

(1) A doorway in a Class 2 or 3 building must be protected if it provides access from a *sole-occupancy unit* to—

(a) a *public corridor*, public lobby, or the like; or

(b) a room not within a *sole-occupancy unit*; or

(c) the landing of an internal non *fire-isolated stairway* that serves as a *required exit*; or

(d) another *sole-occupancy unit*.

(2) A doorway in a Class 2 or 3 building must be protected if it provides access from a room not within a *sole-occupancy unit* to—

(a) a *public corridor*, public lobby, or the like; or

(b) the landing of an internal non *fire-isolated stairway* that serves as a *required exit*.

(3) A doorway in a Class 4 part of a building must be protected if it provides access to any other internal part of the building.

NSW C4D12(4)

(4) Except as provided in (5), protection for a doorway must be at least—

(a) in a building of Type A construction — a *self-closing* –/60/30 fire door; and

(b) in a building of Type B or C construction — a *self-closing*, tight fitting, solid core door, not less than 35 mm thick.

NSW C4D12(5)

(5) In a Class 3 building used as a *residential care building* protected with a sprinkler system complying with Specification 17, protection for a doorway must be at least—

(a) a tight fitting, solid core door not less than 35 mm thick if the building is divided into *floor areas* not exceeding 500 m^2 with smoke proof walls complying with S11C2; or

(b) a tight fitting, solid core door not less than 35 mm thick fitted with a *self-closing* device, a delayed closing device or an *automatic* closing device.

(6) Other openings in *internal walls* which are *required* to have an FRL with respect to *integrity* and *insulation* must not reduce the *fire-resisting* performance of the wall.

(7) A door *required* by (4) or (5) may be *automatic*-closing in accordance with the following:

(a) The *automatic*-closing operation must be initiated by the activation of a smoke detector, or any other detector deemed suitable in accordance with AS 1670.1 if smoke detectors are unsuitable in the atmosphere, installed in accordance with the relevant provisions of AS 1670.1 and located not more than 1.5 m horizontal distance from the approach side of the doorway.

(b) Where any other *required* suitable fire alarm system, including a sprinkler system (other than a FPAA101D system) complying with Specification 17, is installed in the building, activation of the system must also initiate the *automatic*-closing operation.

(8) The requirements of (9) apply in a Class 2 or 3 building where a path of travel to an *exit*—

(a) does not provide a person seeking egress with a choice of travel in different directions to alternative *exits*; and

(b) is along an open balcony, landing or the like; and

(c) passes an *external wall* of—

(i) another *sole-occupancy unit*; or

(ii) a room not within a *sole-occupancy unit*.

(9) The *external wall* mentioned in (8)(c) must—

(a) be constructed of concrete or masonry, or be lined internally with a *fire-protective covering*; and

(b) have any doorway fitted with a *self-closing*, tight-fitting solid core door not less than 35 mm thick; and

(c) have any *windows* or other openings—

(i) protected internally in accordance with C4D5; or

(ii) located at least 1.5 m above the floor of the balcony, landing or the like.

NSW C4D12(10)

C4D13 Openings in floors and ceilings for services

[2019: C3.12]

(1) Where a service passes through—

(a) a floor that is *required* to have an FRL with respect to *integrity* and *insulation*; or

(b) a ceiling *required* to have a *resistance to the incipient spread of fire*,

the service must be installed in accordance with (2).

(2) A service must be protected—

(a) in a building of Type A construction, by a *shaft* complying with Specification 5; or

(b) in a building of Type B or C construction, by a *shaft* that will not reduce the fire performance of the building elements it penetrates; or

(c) in accordance with C4D15.

(3) Where a service passes through a floor which is *required* to be protected by a *fire-protective covering*, the penetration must not reduce the fire performance of the covering.

C4D14 Openings in shafts

[2019: C3.13]

In a building of Type A construction, an opening in a wall providing access to a ventilating, pipe, garbage or other service *shaft* must be protected by—

(a) if it is in a *sanitary compartment* — a door or panel which, together with its frame, is *non-combustible* or has an FRL of not less than –/30/30; or

(b) a *self-closing* –/60/30 fire door or hopper; or

(c) an access panel having an FRL of not less than –/60/30; or

(d) if the *shaft* is a garbage *shaft* — a door or hopper of *non-combustible* construction.

C4D15 Openings for service installations

[2019: C3.15]

(1) The requirements of (2) apply where an electrical, electronic, plumbing, mechanical ventilation, air-conditioning or other service penetrates a building element (other than an *external wall* or roof) that is *required* to have an FRL with respect to *integrity* or *insulation* or a *resistance to the incipient spread of fire*.

(2) An installation mentioned in (1) must comply with any one of the following:

(a) Tested systems — the following applies:

(i) The service, building element and any protection method at the penetration—

(A) are identical with a prototype assembly of the service, building element and protection method which has been tested in accordance with AS 4072.1 and AS 1530.4 and has achieved the *required* FRL or *resistance to the incipient spread of fire*; or

(B) differ from a prototype assembly of the service, building element and protection method in accordance with Section 4 of AS 4072.1.

(ii) It complies with (i) except for the *insulation* criteria relating to the service if—

(A) the service is a pipe system comprised entirely of metal (excluding pipe seals or the like); and

(B) any *combustible* building element is not located within 100 mm of the service for a distance of 2 m from the penetration; and

(C) *combustible* material is not able to be located within 100 mm of the service for a distance of 2 m from

the penetration; and

(D) it is not located in a *required exit*.

(iii) The determination of the *required* FRL must be confirmed in a report from an *Accredited Testing Laboratory* in accordance with Specifications 1 and 2.

(b) Ventilation and air-conditioning — in the case of ventilating or air-conditioning ducts or equipment, the installation is in accordance with AS 1668.1.

(c) Compliance with Specification 13 — the following applies:

(i) The service is a pipe system comprised entirely of metal (excluding pipe seals or the like) and is installed in accordance with Specification 13 and it—

(A) penetrates a wall, floor or ceiling, but not a ceiling *required* to have a *resistance to the incipient spread of fire*; and

(B) connects not more than 2 *fire compartments* in addition to any *fire-resisting* service *shafts*; and

(C) does not contain a flammable or combustible liquid or gas.

(ii) The service is sanitary plumbing installed in accordance with Specification 13 and it—

(A) is of metal or UPVC pipe; and

(B) penetrates the floors of a Class 5, 6, 7, 8 or 9b building; and

(C) is in a *sanitary compartment* separated from other parts of the building by walls with the FRL *required* by Specification 5 for a stair *shaft* in the building and a *self-closing* –/60/30 fire door.

(iii) The service is a wire or cable, or a cluster of wires or cables installed in accordance with Specification 13 and it—

(A) penetrates a wall, floor or ceiling, but not a ceiling *required* to have a *resistance to the incipient spread of fire*; and

(B) connects not more than 2 *fire compartments* in addition to any *fire-resisting* service *shafts*.

(iv) The service is an electrical switch, outlet, or the like, and it is installed in accordance with Specification 13.

C4D16 Construction joints

[2019: C3.16]

(1) Construction joints, spaces and the like in and between building elements *required* to be *fire-resisting* with respect to *integrity* and *insulation* must be protected in a manner—

(a) identical with a prototype tested in accordance with AS 4072.1 and AS 1530.4 to achieve the *required* FRL; or

(b) that differs from a prototype in accordance with Section 4 of AS 4072.1 and achieves the *required* FRL.

(2) The determination of the *required* FRL must be confirmed in a report from an *Accredited Testing Laboratory* in accordance with Specifications 1 and 2.

(3) The requirements of (1) do not apply where joints, spaces and the like between *fire-protected timber* elements are provided with cavity barriers in accordance with Specification 9.

C4D17 Columns protected with lightweight construction to achieve an FRL

[2019: C3.17]

A column protected by *lightweight construction* to achieve an FRL which passes through a building element that is *required* to have an FRL or a *resistance to the incipient spread of fire*, must be installed using a method and materials identical with a prototype assembly of the construction which has achieved the *required* FRL or *resistance to the incipient spread of fire*.

SA C4D18

Specification 5 Fire-resisting construction

S5C1 Scope

[2019: Spec C1.1: 1]

This Specification contains requirements for the *fire-resisting construction* of building elements.

General requirements

S5C2 Exposure to fire-source features

[2019: Spec C1.1: 2.1]

(1) A part of a building element is exposed to a *fire-source feature* if any of the horizontal straight lines between that part and the *fire-source feature*, or vertical projection of the feature, is not obstructed by another part of the building that—

(a) has an FRL of not less than 30/–/–; and

(b) is neither transparent nor translucent.

(2) A part of a building element is not exposed to a *fire-source feature* if the *fire-source feature* is—

(a) an *external wall* of another building that stands on the allotment and the part concerned is more than 15 m above the highest part of that *external wall*; or

(b) a side or rear boundary of the allotment and the part concerned is below the level of the finished ground at every relevant part of the boundary concerned.

(3) If various distances apply for different parts of a building element—

(a) the entire element must have the FRL applicable to that part having the least distance between itself and the relevant *fire-source feature*; or

(b) each part of the element must have the FRL applicable according to its individual distance from the relevant *fire-source feature*.

(4) The requirements of (3) do not override or permit any exemption from S5C3.

S5C3 Fire protection for a support of another part

[2019: Spec C1.1: 2.2]

(1) Where a part of a building *required* to have an FRL depends upon direct vertical or lateral support from another part to maintain its FRL, that supporting part, subject to (2), must—

(a) have an FRL not less than that *required* by other provisions of this Specification; and

(b) if located within the same *fire compartment* as the part it supports have an FRL in respect of *structural adequacy* the greater of that *required*—

(i) for the supporting part itself; and

(ii) for the part it supports; and

(c) be *non-combustible*—

(i) if *required* by other provisions of this Specification; or

(ii) if the part it supports is *required* to be *non-combustible*.

(2) The following building elements need not comply with (1)(b) and (1)(c)(ii):

(a) An element providing lateral support to an *external wall* complying with S5C24(1)(b) or C2D12.

(b) An element providing support within a *carpark* and complying with S5C19, S5C22 or S5C25.

(c) A roof providing lateral support in a building—

(i) of Type A construction if it complies with S5C15(a), (b) or (d); and

(ii) of Type B and C construction.

(d) A column providing lateral support to a wall where the column complies with S5C6(1) and (2).

(e) An element providing lateral support to a *fire wall* or *fire-resisting* wall, provided the wall is supported on both sides and failure of the element on one side does not affect the fire performance of the wall.

S5C4 Lintels

[2019: Spec C1.1: 2.3]

(1) A lintel must have the FRL *required* for the part of the building in which it is situated.

(2) A lintel need not comply with (1) if it does not contribute to the support of a fire door, fire *window* or fire shutter, and—

(a) it spans an opening in—

(i) a wall of a building containing only one *storey*; or

(ii) a non-*loadbearing* wall of a Class 2 or 3 building; or

(b) it spans an opening in masonry which is not more than 150 mm thick and—

(i) not more than 3 m wide if the masonry is non-*loadbearing*; or

(ii) not more than 1.8 m wide if the masonry is *loadbearing* and part of a solid wall or one of the leaves of a cavity wall.

S5C5 Method of attachment not to reduce the fire-resistance of building elements

[2019: Spec C1.1: 2.4]

The method of attaching or installing a finish, lining, *ancillary element* or service installation to the building element must not reduce the fire-resistance of that element to below that *required*.

S5C6 General concessions

[2019: Spec C1.1: 2.5]

(1) Steel columns — A steel column, other than one in a *fire wall* or *common wall*, need not have an FRL in a building that contains—

(a) only 1 *storey*; or

(b) 2 *storeys* in some of its parts and 1 *storey* only in its remaining parts if the sum of the *floor areas* of the upper *storeys* of its 2 *storey* parts does not exceed the lesser of—

(i) 1/8 of the sum of the *floor areas* of the 1 *storey* parts; or

(ii) in the case of a building to which one of the maximum *floor areas* specified in Table C3D3 is applicable — 1/10 of that area; or

(iii) in the case of a building to which two or more of the maximum *floor area* specified in Table C3D3 is applicable — 1/10 of the lesser of those areas.

(2) Timber columns — A timber column may be used in a single *storey* building if—

(a) in a *fire wall* or *common wall* the column has an FRL not less than that listed in Table S5C11d, S5C21d or S5C24c as appropriate; and

(b) in any other case where the column is *required* to have an FRL in accordance with Table S5C11a, S5C11c, S5C11g, S5C21a, S5C21c, S5C21g, S5C24a or S5C24b, it has an FRL of not less than 30/–/–.

(3) Structures on roofs — A *non-combustible* structure situated on a roof need not comply with the other provisions of this Specification if it only contains—

(a) lift motor equipment; or

(b) one or more of the following:

(i) Hot water or other water tanks.

(ii) Ventilating ductwork, ventilating fans and their motors.

(iii) Air-conditioning chillers.

(iv) *Window* cleaning equipment.

(v) Other service units that are *non-combustible* and do not contain flammable or combustible liquids or gases.

(4) Curtain walls and panel walls — A requirement for an *external wall* to have an FRL does not apply to a *curtain wall* or *panel wall* which is of *non-combustible* construction and fully protected by *automatic* external wall-wetting sprinklers.

(5) Balconies and verandahs — A balcony, verandah or the like and any incorporated supporting part, which is attached to or forms part of a building, need not comply with Table S5C11c, S5C11g, S5C21c, S5C21g, S5C24b or S5C24e if—

(a) it does not form part of the only path of travel to a *required exit* from the building; and

(b) in Type A construction—

(i) it is situated not more than 2 *storeys* above the lowest *storey* providing direct egress to a road or *open space*; and

(ii) any supporting columns are of *non-combustible* construction.

S5C7 Mezzanine floors: Concession

[2019: Spec C1.1: 2.6]

(1) This Clause does not apply to a Class 9b building that is a spectator stand or audience viewing area accommodating more than 100 persons as calculated according to D2D18.

(2) A *mezzanine* and its supports need not have an FRL or be *non-combustible* provided—

(a) the total *floor area* of all the *mezzanines* in the same room does not exceed 1/3 of the *floor area* of the room or 200 m^2, whichever is the lesser; and

(b) the FRL of each wall and column that supports any other part of the building within 6 m of the *mezzanine* is increased by the amount listed in Table S5C7.

Table S5C7: Increased FRLs — Construction surrounding mezzanines

Level otherwise *required* for any FRL criterion (mins)	Increase in level to not less than (mins)
30	60
60	90
90	120
120	180
180	240

Table Notes

The increase in level applies to each FRL criterion (*structural adequacy*, *integrity* or *insulation*) relevant to the building element concerned.

S5C8 Enclosure of shafts

[2019: Spec C1.1: 2.7]

(1) *Shafts required* to have an FRL must be enclosed at the top and bottom by construction having an FRL not less than that *required* for the walls of a non-*loadbearing shaft* in the same building.

(2) The provisions of (1) need not apply to—

(a) the top of a *shaft* extending beyond the roof covering, other than one enclosing a *fire-isolated stairway* or *ramp*; or

(b) the bottom of a *shaft* if it is *non-combustible* and laid directly on the ground.

S5C9 Carparks in Class 2 and 3 buildings

[2019: Spec C1.1: 2.8]

(1) If a Class 2 building contains not more than 4 *storeys* of which—

(a) one *storey* is Class 7 used solely for the purpose of parking motor vehicles or for some other purpose that is ancillary to a Class 2; and

(b) the remaining *storeys* are of Class 2,

the *carpark storey* is regarded as Class 2 only for the purpose of determining the relevant *fire-resisting* requirements of this Specification.

(2) If a Class 3 building or a building of Class 2 and 3 contains not more than 3 *storeys* of which—

(a) one *storey* is Class 7 used solely for the purpose of parking motor vehicles or for some other purpose that is ancillary to the other *storeys*; and

(b) the remaining *storeys* are of Class 2 or 3,

the *carpark storey* is regarded as Class 2 or 3 only for the purpose of determining the relevant *fire-resisting* requirements of this Specification.

S5C10 Residential care building: Concession

[2019: Spec C1.1: 2.9]

(1) In a Class 3 building protected with a sprinkler system complying with Specification 17 and used as a *residential care building*, any FRL criterion prescribed in Tables S5C11a, S5C11d, S5C11e, S5C11f, S5C11g, S5C21a, S5C21d, S5C21e, S5C21f, S5C21g, S5C24a, S5C24c or S5C24d—

(a) for any floor and any *loadbearing* wall, may be reduced to 60, except any FRL criterion of 90 for an *external wall* must be maintained when tested from the outside; and

(b) for any non-*loadbearing internal wall*, need not apply if—

(i) it is lined on each side with standard grade plasterboard not less than 13 mm thick or similar *non-combustible* material; and

(ii) it extends—

(A) to the underside of the floor next above; or

(B) to the underside of a ceiling lined with standard grade plasterboard not less than 13 mm thick or a material with at least an equivalent level of fire protection; or

(C) to the underside of a *non-combustible* roof covering; and

(iii) any insulation installed in the cavity of the wall is *non-combustible*; and

(iv) any construction joint, space or the like between the top of the wall and the floor, ceiling or roof is smoke sealed with intumescent putty or other suitable material.

(2) The concession described at (1) does not apply to *fire-protected timber* building elements.

Type A Fire-Resisting Construction

S5C11 Type A fire-resisting construction — fire-resistance of building elements

[2019: Spec C1.1: 3.1 and Table 3]

(1) In a building *required* to be of Type A construction—

(a) each building element listed in Tables S5C11a, S5C11b, S5C11c, S5C11d, S5C11e, S5C11f and S5C11g, and any beam or column incorporated in it, must have an FRL not less than that listed in those Tables for the particular

class of building concerned; and

(b) any *internal wall required* to have an FRL with respect to *integrity* and *insulation* must extend to—

(i) the underside of the floor next above; or

(ii) the underside of a roof complying with Table S5C11g; or

(iii) if under S5C15 the roof is not *required* to comply with Table S5C11g, the underside of the *non-combustible* roof covering and, except for roof battens with dimensions of 75 mm x 50 mm or less or *sarking-type material*, must not be crossed by timber or other *combustible* building elements; or

(iv) a ceiling that is immediately below the roof and has a *resistance to the incipient spread of fire* to the roof space between the ceiling and the roof of not less than 60 minutes; and

(c) a *loadbearing internal wall* and a *loadbearing fire wall* (including those that are part of a *loadbearing shaft*) must be constructed from—

(i) concrete; or

(ii) masonry; or

(iii) subject to (2), *fire-protected timber*; or

(iv) any combination of (i) to (iii); and

(d) the FRLs specified in Table S5C11c for an external column apply also to those parts of an internal column that face and are within 1.5 m of a *window* and are exposed through that *window* to a *fire-source feature*.

(2) For the purposes of (1)(c)(iii), fire-protected timber may be used, provided that—

(a) the building is—

(i) a separate building; or

(ii) a part of a building—

(A) which only occupies part of a *storey*, and is separated from the remaining part by a *fire wall*; or

(B) which is located above or below a part not containing *fire-protected timber* and the floor between the adjoining parts is provided with an FRL not less than that prescribed for a *fire wall* for the lower *storey*; and

(b) the building has an *effective height* of not more than 25 m; and

(c) the building has a sprinkler system (other than a FPAA101D or FPAA101H system) throughout complying with Specification 17; and

(d) any insulation installed in the cavity of the timber building element *required* to have an FRL is *non-combustible*; and

(e) cavity barriers are provided in accordance with Specification 9.

(3) For the purposes of Table S5C11a and Table S5C11b, *external wall* includes any column and other building element incorporated within it or other external building element.

Table S5C11a: Type A construction: FRL of loadbearing parts of external walls

Distance from a *fire-source feature*	FRL (in minutes): *Structural adequacy/ Integrity / Insulation*			
	Class 2, 3 or 4 part	Class 5, 7a or 9	Class 6	Class 7b or 8
Less than 1.5 m	90/90/90	120/120/120	180/180/180	240/240/240
1.5 to less than 3 m	90/60/60	120/90/90	180/180/120	240/240/180
3 m or more	90/60/30	120/60/30	180/120/90	240/180/90

Table S5C11b: Type A construction: FRL of non-loadbearing parts of external walls

Distance from a *fire-source feature*	FRL (in minutes): *Structural adequacy* / *Integrity* / *Insulation*			
	Class 2, 3 or 4 part	Class 5, 7a or 9	Class 6	Class 7b or 8
Less than 1.5 m	–/90/90	–/120/120	–/180/180	–/240/240
1.5 to less than 3 m	–/60/60	–/90/90	–/180/120	–/240/180
3 m or more	–/–/–	–/–/–	–/–/–	–/–/–

Table S5C11c: Type A construction: FRL of external columns not incorporated in an external wall

Column type	FRL (in minutes): *Structural adequacy* / *Integrity* / *Insulation*			
	Class 2, 3 or 4 part	Class 5, 7a or 9	Class 6	Class 7b or 8
Loadbearing	90/–/–	120/–/–	180/–/–	240/–/–
Non-*loadbearing*	–/–/–	–/–/–	–/–/–	–/–/–

Table S5C11d: Type A construction: FRL of common walls and fire walls

Wall type	FRL (in minutes): *Structural adequacy* / *Integrity* / *Insulation*			
	Class 2, 3 or 4 part	Class 5, 7a or 9	Class 6	Class 7b or 8
Loadbearing or non-*loadbearing*	90/90/90	120/120/120	180/180/180	240/240/240

Table S5C11e: Type A construction: FRL of loadbearing internal walls

Location	FRL (in minutes): *Structural adequacy* / *Integrity* / *Insulation*			
	Class 2, 3 or 4 part	Class 5, 7a or 9	Class 6	Class 7b or 8
Fire-resisting lift and stair *shafts*	90/90/90	120/120/120	180/120/120	240/120/120
Bounding *public corridors*, public lobbies and the like	90/90/90	120/–/–	180/–/–	240/–/–
Between or bounding *sole-occupancy units*	90/90/90	120/–/–	180/–/–	240/–/–
Ventilating, pipe, garbage, and like *shafts* not used for the discharge of hot products of combustion	90/90/90	120/90/90	180/120/120	240/120/120

Table S5C11f: Type A construction: FRL of non-loadbearing internal walls

Location	FRL (in minutes): *Structural adequacy* / *Integrity* / *Insulation*			
	Class 2, 3 or 4 part	Class 5, 7a or 9	Class 6	Class 7b or 8
Fire-resisting lift and stair *shafts*	–/90/90	–/120/120	–120/120	–/120/120
Bounding *public corridors*, public lobbies and the like	–/60/60	–/–/–	–/–/–	–/–/–
Between or bounding *sole-occupancy units*	–/60/60	–/–/–	–/–/–	–/–/–
Ventilating, pipe, garbage, and like *shafts* not used for the discharge of hot products of combustion	–/90/90	–/90/90	–/120/120	–/120/120

Table S5C11g: Type A construction: FRL of other building elements not covered by Tables S5C11a to S5C11f

Building element	FRL (in minutes): *Structural adequacy* / *Integrity* / *Insulation*			
	Class 2, 3 or 4 part	Class 5, 7a or 9	Class 6	Class 7b or 8
Other *loadbearing* internal walls, internal beams, trusses and columns	90/–/–	120/–/–	180/–/–	240/–/–
Floors	90/90/90	120/120/120	180/180/180	240/240/240
Roofs	90/60/30	120/60/30	180/60/30	240/90/60

S5C12 Type A fire-resisting construction — concessions for floors

[2019: Spec C1.1: 3.2]

A floor need not comply with Table S5C11g if—

(a) it is laid directly on the ground; or

(b) in a Class 2, 3, 5 or 9 building, the space below is not a *storey*, does not accommodate motor vehicles, is not a storage or work area, and is not used for any other ancillary purpose; or

(c) it is a timber *stage* floor in a Class 9b building laid over a floor having the *required* FRL and the space below the *stage* is not used as a dressing room, store room, or the like; or

(d) it is within a *sole-occupancy unit* in a Class 2 or 3 building or Class 4 part of a building; or

(e) it is an open-access floor (for the accommodation of electrical and electronic services and the like) above a floor with the *required* FRL.

S5C13 Type A fire-resisting construction — floor loading of Class 5 and 9b buildings: Concession

[2019: Spec C1.1: 3.3]

If a floor in a Class 5 or 9b building is designed for a live load not exceeding 3 kPa—

(a) the floor next above (including floor beams) may have an FRL of 90/90/90; or

(b) the roof, if that is next above (including roof beams), may have an FRL of 90/60/30.

S5C14 Type A fire-resisting construction — roof superimposed on concrete slab: Concession

[2019: Spec C1.1: 3.4]

A roof superimposed on a concrete slab roof need not comply with S5C11 as to *fire-resisting construction* if—

(a) the superimposed roof and any construction between it and the concrete slab roof are *non-combustible* throughout; and

(b) the concrete slab roof complies with Table S5C11g.

S5C15 Type A fire-resisting construction — roof: Concession

[2019: Spec C1.1: 3.5]

A roof need not comply with Table S5C11g if its covering is *non-combustible* and the building—

(a) has a sprinkler system (other than a FPAA101D or FPAA101H system) complying with Specification 17 installed throughout; or

(b) has a *rise in storeys* of 3 or less; or

(c) is of Class 2 or 3; or

(d) has an *effective height* of not more than 25 m and the ceiling immediately below the roof has a *resistance to the incipient spread of fire* to the roof space of not less than 60 minutes.

S5C16 Type A fire-resisting construction — roof lights

[2019: Spec C1.1: 3.6]

If a roof is *required* to have an FRL or its covering is *required* to be *non-combustible*, roof lights or the like installed in that roof must—

(a) have an aggregate area of not more than 20% of the roof surface; and

(b) be not less than 3 m from—

(i) any boundary of the allotment other than the boundary with a road or public place; and

(ii) any part of the building which projects above the roof unless that part has the FRL *required* of a *fire wall* and any openings in that part of the wall for 6 m vertically above the roof light or the like are protected in accordance with C4D5; and

(iii) any roof light or the like in an adjoining *sole-occupancy unit* if the walls bounding the unit are *required* to have an FRL; and

(iv) any roof light or the like in an adjoining fire-separated section of the building; and

(c) if a ceiling with a *resistance to the incipient spread of fire* is *required*, be installed in a way that will maintain the level of protection provided by the ceiling to the roof space.

S5C17 Type A fire-resisting construction — internal columns and walls: Concession

[2019: Spec C1.1:3.7]

For a building with an *effective height* of not more than 25 m and having a roof without an FRL in accordance with S5C15, in the *storey* immediately below that roof, internal columns other than those referred to in S5C11(1)(d) and *internal walls* other than *fire walls* and *shaft* walls may have—

(a) in a Class 2 or 3 building: FRL 60/60/60; or

(b) in a Class 5, 6, 7, 8 or 9 building—

(i) with *rise in storeys* exceeding 3: FRL 60/60/60; or

(ii) with *rise in storeys* not exceeding 3: no FRL.

S5C18 Type A fire-resisting construction — open spectator stands and indoor sports stadiums: Concession

[2019: Spec C1.1: 3.8]

In an *open spectator stand* or indoor sports stadium, the following building elements need not have the FRL specified in Tables S5C11a, S5C11b, S5C11c, S5C11e and S5C11g:

(a) The roof if it is *non-combustible*.

(b) Columns and *loadbearing* walls supporting only the roof if they are *non-combustible*.

(c) Any non-*loadbearing* part of an *external wall* less than 3 m—

(i) from any *fire-source feature* to which it is exposed if it has an FRL of not less than –/60/60 and is *non-combustible*; or

(ii) from an *external wall* of another *open spectator stand* if it is *non-combustible*.

S5C19 Type A fire-resisting construction — carparks

[2019: Spec C1.1: 3.9 and Table 3.9]

(1) Notwithstanding S5C11, a *carpark* may comply with this clause if it is an *open-deck carpark* or is protected with a sprinkler system (other than a FPAA101D or FPAA101H system) complying with Specification 17 and is—

(a) a separate building; or

(b) a part of a building—

(i) which only occupies part of a *storey*, and is separated from the remaining part by a *fire wall*; or

(ii) which is located above or below another classification, and the floor separating the classifications complies with C3D10; or

(iii) which is located above another Class 7 part of the building not used for carparking, and the floor separating the parts complies with Table S5C11g for a Class 7 part other than a *carpark*; or

(iv) which is located below another Class 7 part of the building not used for carparking, and the floor separating the parts complies with this clause.

(2) For the purposes of this clause, a *carpark*—

(a) includes—

(i) an administration area associated with the functioning of the *carpark*; and

(ii) where the *carpark* is sprinklered, is associated with a Class 2 or 3 building and provides carparking for separate *sole-occupancy units*, each carparking area with an area not greater than 10% of its *floor area* for purposes ancillary to the *sole-occupancy units*; but

(b) excludes—

(i) except for (a), any area of another classification, or other part of a Class 7 building not used for carparking; and

(ii) a building or part of a building specifically intended for the parking of trucks, buses, vans and the like.

(3) For building elements in a *carpark* as described in (1) and (2), the following minimum FRLs are applicable:

(a) *External wall*:

(i) Less than 3 m from a *fire-source feature* to which it is exposed:

(A) *Loadbearing*: 60/60/60.

(B) Non-*loadbearing*: –/60/60.

(ii) 3 m or more from a *fire-source feature* to which it is exposed: –/–/–.

(b) *Internal wall*:

(i) *Loadbearing*, other than one supporting only the roof (not used for carparking): 60/–/–.

(ii) Supporting only the roof (not used for carparking): –/–/–.

(iii) Non-*loadbearing*: –/–/–.

(c) *Fire wall*:

(i) From the direction used as a *carpark*: 60/60/60.

(ii) From the direction not used as a *carpark*: as *required* by Table S5C11d.

(d) Columns:

(i) Supporting only the roof (not used for carparking) and 3 m or more from a *fire-source feature* to which it is exposed: –/–/–.

(ii) Steel column, other than one covered by (i) and one that does not support a part of a building that is not used as a *carpark*—

(A) 60/–/–; or

(B) an ESA/M of not greater than 26m^2/tonne.

(iii) Any other column not covered by (i) or (ii): 60/–/–.

(e) Beams:

(i) Steel floor beam in continuous contact with a concrete floor slab—

(A) 60/–/–; or

(B) an ESA/M of not greater than 30m^2/tonne.

(ii) Any other beam: 60/–/–.

(f) Fire-resisting lift and stair shaft (within the *carpark* only): 60/60/60.

(g) Floor slab and vehicle ramp: 60/60/60.

(h) Roof (not used for carparking): –/–/–.

(4) For the purposes of sub-clause (3):

(a) ESA/M means the ratio of exposed surface area to mass per unit length.

(b) Refer to Specification 17 for special requirements for a sprinkler system in a *carpark* complying with (3) and located within a multi-classified building.

S5C20 Type A fire-resisting construction — Class 2 and 3 buildings: Concession

[2019: Spec C1.1: 3.10]

(1) In a Class 2 or 3 building with a *rise in storeys* of not more than 3—

(a) notwithstanding C2D10(1) and (2) and C3D7, timber framing may be used for—

(i) *external walls*; and

(ii) *common walls*; and

(iii) the floor framing of lifts pits; and

(iv) non-*loadbearing internal walls* which are *required* to be *fire-resisting*; and

(v) non-*loadbearing shafts*, except *shafts* used for the discharge of hot products of combustion; and

(vi) spandrels or horizontal construction provided for the purposes of C3D7; and

(b) notwithstanding S5C11(1)(c), for *loadbearing internal walls* and *loadbearing fire walls*—

(i) timber framing may be used; and

(ii) *non-combustible* materials may be used; and

(c) notwithstanding S5C3(1)(c), timber framing may be used for a part of a building that provides support to a part of a building constructed of timber framing or *non-combustible* material in accordance with (a) and (b).

(2) A Class 2 or 3 building having a *rise in storeys* of not more than 4 may have the top three *storeys* constructed in accordance with (1) provided—

(a) the lowest *storey* is used solely for the purpose of parking motor vehicles or for some other ancillary purpose; and

(b) the lowest *storey* is constructed of concrete or masonry including the floor between it and the Class 2 or 3 part of the building above; and

(c) the lowest *storey* and the *storey* above are separated by construction having an FRL of not less than 90/90/90 with no openings or penetrations that would reduce the *fire-resisting* performance of that construction except that a doorway in that construction may be protected by a –/60/30 *self-closing* fire door.

(3) In a Class 2 or 3 building complying with (1) or (2) and fitted with a sprinkler system (other than a FPAA101D or FPAA101H system) complying with Specification 17, any FRL criterion prescribed in Tables S5C11a, S5C11d, S5C11e, S5C11f and S5C11g—

(a) for any floor and any *loadbearing* wall, may be reduced to 60, except any FRL criterion of 90 for an *external wall* must be maintained when tested from the outside; and

(b) for any non-*loadbearing internal wall*, need not apply if—

(i) it is lined on each side with 13 mm standard grade plasterboard or similar *non-combustible* material; and

(ii) it extends—

(A) to the underside of the floor next above; or

(B) to the underside of a ceiling with a *resistance to the incipient spread of fire* of 60 minutes; or

(C) to the underside of a *non-combustible* roof covering; and

(iii) any insulation installed in the cavity of the wall is *non-combustible*; and

(iv) any construction joint, space or the like between the top of the wall and the floor, ceiling or roof is smoke sealed with intumescent putty or other suitable material; and

(v) any doorway in the wall is protected by a *self-closing*, tight fitting, solid core door not less than 35 mm thick.

Type B Fire-Resisting Construction

S5C21 Type B fire-resisting construction — fire-resistance of building elements

[2019: Spec C1.1: 4.1 and Table 4]

(1) In a building *required* to be of Type B construction—

(a) each building element listed in Tables S5C21a, S5C21b, S5C21c, S5C21d, S5C21e, S5C21f and S5C21g, and any beam or column incorporated in it, must have an FRL not less than that listed in the Tables for the particular class of building concerned; and

(b) if a stair *shaft* supports any floor or a structural part of it—

(i) the floor or part must have an FRL of 60/–/– or more; or

(ii) the junction of the stair *shaft* must be constructed so that the floor or part will be free to sag or fall in a fire without causing structural damage to the *shaft*; and

(c) any *internal wall* which is *required* to have an FRL with respect to *integrity* and *insulation*, except a wall that bounds a *sole-occupancy unit* in the topmost (or only) *storey* and there is only one unit in that *storey*, must extend to—

(i) the underside of the floor next above if that floor has an FRL of at least 30/30/30; or

(ii) the underside of a ceiling having a *resistance to the incipient spread of fire* to the space above itself of not less than 60 minutes; or

(iii) the underside of the roof covering if it is *non-combustible* and, except for roof battens with dimensions of 75 mm x 50 mm or less or *sarking-type material*, must not be crossed by timber or other *combustible* building elements; or

(iv) 450 mm above the roof covering if it is *combustible*; and

(d) a *loadbearing internal wall* and a *loadbearing fire wall* (including those that are part of a *loadbearing shaft*) must be constructed from—

(i) concrete; or

(ii) masonry; or

(iii) subject to (2), *fire-protected timber*; or

(iv) any combination of (i) to (iii); and

(e) in a Class 5, 6, 7, 8 or 9 building, in the *storey* immediately below the roof, internal columns and *internal walls* other than *fire walls* and *shaft* walls, need not comply with Tables S5C21e, S5C21f and S5C21g; and

(f) in a Class 2 or 3 building, except where within the one *sole-occupancy units*, or a Class 9a *health-care building* or a Class 9b building, a floor separating *storeys* or above a space for the accommodation of motor vehicles or used for storage or any other ancillary purpose, must—

(i) be constructed so that it is at least of the standard achieved by a floor/ceiling system incorporating a ceiling which has a *resistance to the incipient spread of fire* to the space above itself of not less than 60 minutes; or

(ii) have an FRL of at least 30/30/30; or

(iii) have a *fire-protective covering* on the underside of the floor, including beams incorporated in it, if the floor is *combustible* or of metal; and

(g) in a Class 9c building a floor above a space for the accommodation of motor vehicles or used for storage or any other ancillary purpose, and any column supporting the floor must—

(i) be constructed so that it is at least of the standard achieved by a floor/ceiling system incorporating a ceiling which has a *resistance to the incipient spread of fire* to the space above itself of not less than 60 minutes; or

(ii) have an FRL of at least 30/30/30; or

(iii) have a *fire-protective covering* on the underside of the floor, including beams incorporated in it, if the floor is *combustible* or of metal.

(2) For the purposes of (1)(d)(iii), *fire-protected timber* may be used, provided that—

(a) the building is—

(i) a separate building; or

(ii) a part of a building—

(A) which only occupies part of a *storey*, and is separated from the remaining part by a *fire wall*; or

(B) which is located above or below a part not containing *fire-protected timber* and the floor between the adjoining parts is provided with an FRL not less than that prescribed for a *fire wall* for the lower *storey*; and

(b) the building has an *effective height* of not more than 25 m; and

(c) the building has a sprinkler system (other than a FPAA101D or FPAA101H system) throughout complying with Specification 17; and

(d) any *insulation* installed in the *cavity* of the timber building element *required* to have an FRL is *non-combustible*; and

(e) cavity barriers are provided in accordance with Specification 9.

(3) For the purposes of Table S5C21a and Table S5C21b, *external wall* includes any column and other building element incorporated within it or other external building element.

Table S5C21a: Type B construction: FRL of loadbearing parts of external walls

Distance from a *fire-source feature*	FRL (in minutes) *Structural adequacy* / *Integrity* / *Insulation*			
	Class 2, 3 or 4 part	Class 5, 7a or 9	Class 6	Class 7b or 8
Less than 1.5 m	90/90/90	120/120/120	180/180/180	240/240/240
1.5 to less than 3 m	90/60/30	120/90/60	180/120/90	240/180/120
3 m to less than 9 m	90/30/30	120/30/30	180/90/60	240/90/60
9 m to less than 18 m	90/30/–	120/30/–	180/60/–	240/60/–
18 m or more	–/–/–	–/–/–	–/–/–	–/–/–

Table S5C21b: Type B construction: FRL of non-loadbearing parts of external walls

Distance from a *fire-source feature*	FRL (in minutes): *Structural adequacy* / *Integrity* / *Insulation*			
	Class 2, 3 or 4 part	Class 5, 7a or 9	Class 6	Class 7b or 8
Less than 1.5 m	–/90/90	–/120/120	–/180/180	–/240/240
1.5 m to less than 3 m	–/60/30	–/90/60	–/120/90	–/180/120
3 m or more	–/–/–	–/–/–	–/–/–	–/–/–

Table S5C21c: Type B construction: FRL of external columns not incorporated in an external wall

Distance from a *fire-source feature*	FRL (in minutes): *Structural adequacy* / *Integrity* / *Insulation*			
	Class 2, 3 or 4 part	Class 5, 7a or 9	Class 6	Class 7b or 8
Loadbearing column — less than 18 m	90/–/–	120/–/–	180/–/–	240/–/–

Distance from a *fire-source feature*	FRL (in minutes): *Structural adequacy* / *Integrity* / *Insulation*			
	Class 2, 3 or 4 part	Class 5, 7a or 9	Class 6	Class 7b or 8
Loadbearing column — 18 m or more	–/–/–	–/–/–	–/–/–	–/–/–
Non-*loadbearing* column	–/–/–	–/–/–	–/–/–	–/–/–

Table S5C21d: Type B construction: FRL of common walls and fire walls

Wall type	FRL (in minutes): *Structural adequacy* / *Integrity* / *Insulation*			
	Class 2, 3 or 4 part	Class 5, 7a or 9	Class 6	Class 7b or 8
Loadbearing or non-*loadbearing*	90/90/90	120/120/120	180/180/180	240/240/240

Table S5C21e: Type B construction: FRL of loadbearing internal walls

Location	FRL (in minutes): *Structural adequacy* / *Integrity* / *Insulation*			
	Class 2, 3 or 4 part	Class 5, 7a or 9	Class 6	Class 7b or 8
Fire-resisting lift and stair *shafts*	90/90/90	120/120/120	180/120/120	240/120/120
Bounding *public corridors*, public lobbies and the like	60/60/60	120/–/–	180/–/–	240/–/–
Between or bounding *sole-occupancy units*	60/60/60	120/–/–	180/–/–	240/–/–

Table S5C21f: Type B construction: FRL of non-loadbearing internal walls

Location	FRL (in minutes): *Structural adequacy* / *Integrity* / *Insulation*			
	Class 2, 3 or 4 part	Class 5, 7a or 9	Class 6	Class 7b or 8
Fire-resisting lift and stair *shafts*	–/90/90	–/120/120	–/120/120	–/120/120
Bounding *public corridor*, public lobbies and the like	–/60/60	–/–/–	–/–/–	–/–/–
Between or bounding *sole-occupancy units*	–/60/60	–/–/–	–/–/–	–/–/–

Table S5C21g: Type B construction: FRL of other building elements not covered by Tables S5C21a to S5C21f

Building element	FRL (in minutes): *Structural adequacy* / *Integrity* / *Insulation*			
	Class 2, 3 or 4 part	Class 5, 7a or 9	Class 6	Class 7b or 8
Other *loadbearing* internal walls and columns	60/–/–	120/–/–	180/–/–	240/–/–
Roofs	–/–/–	–/–/–	–/–/–	–/–/–

S5C22 Type B fire-resisting construction — carparks

[2019: Spec C1.1: 4.2 and Table 4.2]

(1) Notwithstanding S5C21, a *carpark* may comply with this clause if it is an *open-deck carpark* or is protected with a sprinkler system (other than a FPAA101D or FPAA101H system) complying with Specification 17 and is—

(a) a separate building; or

(b) a part of a building, and if occupying only part of a *storey*, is separated from the remaining part by a *fire wall*.

(2) For the purposes of this clause, a *carpark*—

(a) includes—

(i) an administration area associated with the functioning of the *carpark*; and

(ii) where the *carpark* is sprinklered, is associated with a Class 2 or 3 building and provides carparking for separate *sole-occupancy units* each carparking area with an area not greater than 10% of its *floor area* for purposes ancillary to the *sole-occupancy units*; but

(b) excludes—

(i) except for (a), any area of another classification, or other part of a Class 7 building not used for carparking; and

(ii) a building or part of a building specifically intended for the parking of trucks, buses, vans and the like.

(3) For building elements in a *carpark* as described in (1) and (2), the following minimum FRLs are applicable:

(a) *External walls*:

(i) Less than 3 m from a *fire-source feature* to which it is exposed:

(A) *Loadbearing*: 60/60/60.

(B) Non-*loadbearing*:–/60/60.

(ii) 3 m or more from a *fire-source feature* to which it is exposed: –/–/–.

(b) *Internal walls*:

(i) *Loadbearing*, other than one supporting only the roof (not used for carparking): 60/–/–.

(ii) Supporting only the roof (not used for carparking): –/–/–.

(iii) Non-*loadbearing*: –/–/–.

(c) *Fire walls*:

(i) From the direction used as a *carpark*: 60/60/60.

(ii) From the direction not used as a *carpark*: as *required* by Table S5C21d.

(d) Columns:

(i) Supporting only the roof (not used for carparking) and 3 m or more from a *fire-source feature* to which it is exposed: –/–/–.

(ii) Steel column, other than one covered by (i) and one that does not support a part of a building that is not used as a *carpark*—

(A) 60/–/–; or

(B) an ESA/M of not greater than 26 m^2/tonne.

(iii) Any other column not covered by (i) or (ii): 60/–/–.

(e) Beams:

(i) Steel floor beam less than 3 m from a *fire-source feature* in continuous contact with a concrete floor slab—

(A) 60/–/–; or

(B) an ESA/M of not greater than 30 m^2/tonne.

(ii) Any other beam less than 3 m from a *fire-source feature*: 60/–/–.

(iii) Any beam 3 m or more from a *fire-source feature*: –/–/–.

(f) Lift *shaft*: –/–/–.

(g) Fire-resisting stair shaft (within the *carpark* only): 60/60/60.

(h) Roof, floor slab and vehicle ramp: –/–/–.

(4) For the purposes of (3), ESA/M means the ratio of exposed surface area to mass per unit length.

S5C23 Type B fire-resisting construction — Class 2 and 3 buildings: Concession

[2019: Spec C1.1: 4.3]

(1) In a Class 2 or 3 building with a *rise in storeys* of not more than 2—

(a) notwithstanding C2D10(1) and (2), timber framing may be used for—

(i) *external walls*; and

(ii) *common walls*; and

(iii) the floor framing of lifts pits; and

(iv) non-*loadbearing internal walls* which are *required* to be *fire-resisting*; and

(v) non-*loadbearing shafts*, except *shafts* used for the discharge of hot products of combustion; and

(b) notwithstanding S5C21(1)(d), for *loadbearing internal walls* and *loadbearing fire walls*—

(i) timber framing may be used; and

(ii) *non-combustible* materials may be used; and

(c) notwithstanding S5C3(1)(c), timber framing may be used for a part of a building that provides support to a part of a building constructed of timber framing or *non-combustible* material in accordance with (a) and (b).

(2) A Class 2 or 3 building having a *rise in storeys* of not more than 2 may have the top *storey* constructed in accordance with (1) provided—

(a) the lowest *storey* is used solely for the purpose of parking motor vehicles or for some other ancillary purpose; and

(b) the lowest *storey* is constructed of concrete or masonry including the floor between it and the Class 2 or 3 part of the building above; and

(c) the lowest *storey* and the *storey* above are separated by construction having an FRL of not less than 90/90/90 with no openings or penetrations that would reduce the *fire-resisting* performance of that construction except that a doorway in that construction may be protected by a –/60/30 *self-closing* fire door.

(3) In a Class 2 or 3 building complying with (1) or (2) and fitted with a sprinkler system (other than a FPAA101D or FPAA101H system) complying with Specification 17, any FRL criterion prescribed in Tables S5C21a, S5C21d, S5C21e, S5C21f and S5C21g; and —

(a) for any *loadbearing* wall, may be reduced to 60, except any FRL criterion of 90 for an *external wall* must be maintained when tested from the outside; and

(b) for any non-*loadbearing internal wall*, need not apply, if—

(i) it is lined on both sides with 13 mm standard grade plasterboard or similar *non-combustible* material; and

(ii) it extends—

(A) to the underside of the floor next above if that floor has an FRL of at least 30/30/30 or is lined on the underside with a *fire-protective covering*; or

(B) to the underside of a ceiling with a *resistance to the incipient spread of fire* of 60 minutes; or

(C) to the underside of a *non-combustible* roof covering; and

(iii) any insulation installed in the cavity of the wall is *non-combustible*; and

(iv) any construction joints, spaces and the like between the top of the wall and the floor, ceiling or roof is smoke sealed with intumescent putty or other suitable material.

Type C Fire-Resisting Construction

S5C24 Type C fire-resisting construction — fire-resistance of building elements

[2019: Spec C1.1: 5.1 and Table 5]

(1) In a building *required* to be of Type C construction—

(a) a building element listed in Tables S5C24a, S5C24b, S5C24c, S5C24d and S5C24e and any beam or column incorporated in it, must have an FRL not less than that listed in those Tables for the particular Class of building concerned; and

(b) an *external wall* that is *required* by Table S5C24a to have an FRL need only be tested from the outside to satisfy the requirement; and

(c) a *fire wall* or an *internal wall* bounding a *sole-occupancy unit* or separating adjoining units must comply with Specification 6 if it is of *lightweight construction* and is *required* to have an FRL; and

(d) in a Class 2 or 3 building, an *internal wall* which is *required* by Table 5C24c or S5C24d to have an FRL must extend—

(i) to the underside of the floor next above if that floor has an FRL of at least 30/30/30 or a *fire-protective covering* on the underside of the floor; or

(ii) to the underside of a ceiling having a *resistance to the incipient spread of fire* to the space above itself of not less than 60 minutes; or

(iii) to the underside of the roof covering if it is *non-combustible*, and except for roof battens with dimensions of 75 mm x 50 mm or less or *sarking-type material*, must not be crossed by timber or other *combustible* building elements; or

(iv) 450 mm above the roof covering if it is *combustible*; and

(e) in a Class 2 or 3 building, except where within the one *sole-occupancy unit*, or a Class 9a *health-care building*, or a Class 9b building, a floor separating *storeys*, or above a space for the accommodation of motor vehicles or used for storage or any other ancillary purpose, and any column supporting the floor, must—

(i) have an FRL of at least 30/30/30; or

(ii) have a *fire-protective covering* on the underside of the floor including beams incorporated in it and around the column, if the floor or column is *combustible* or of metal; and

(f) in a Class 9c building a floor above a space for the accommodation of motor vehicles or used for storage or any other ancillary purpose, and any column supporting the floor, must—

(i) have an FRL of at least 30/30/30; or

(ii) have a *fire-protective covering* on the underside of the floor including beams incorporated in it and around the column, if the floor or column is *combustible* or of metal.

(2) For the purposes of Table S5C24a and Table S5C24b, *external wall* includes any column and other building element incorporated within it or other external building element.

Table S5C24a: Type C construction: FRL of parts of external walls

Distance from a *fire-source feature*	FRL (in minutes): *Structural adequacy* / *Integrity* / *Insulation*			
	Class 2, 3 or 4 part	Class 5, 7a or 9	Class 6	Class 7b or 8
Less than 1.5 m	90/90/90	90/90/90	90/90/90	90/90/90
1.5 to less than 3 m	–/–/–	60/60/60	60/60/60	60/60/60
3 m or more	–/–/–	–/–/–	–/–/–	–/–/–

Table S5C24b: Type C construction: FRL of external columns not incorporated into an external wall

Distance from a *fire-source feature*	FRL (in minutes): *structural adequacy* / *Integrity* / *Insulation*			
	Class 2, 3 or 4 part	Class 5, 7a or 9	Class 6	Class 7b or 8
Less than 1.5 m	90/–/–	90/–/–	90/–/–	90/–/–
1.5 to less than 3 m	–/–/–	60/–/–	60/–/–	60/–/–
3 m or more	–/–/–	–/–/–	–/–/–	–/–/–

Table S5C24c: Type C construction: FRL of common walls and fire walls

Wall type	FRL (in minutes): *Structural adequacy* / *Integrity* / *Insulation*			
	Class 2, 3 or 4 part	Class 5, 7a or 9	Class 6	Class 7b or 8
Loadbearing or non-*loadbearing*	90/90/90	90/90/90	90/90/90	90/90/90

Table S5C24d: Type C construction: FRL of internal walls

Location	FRL (in minutes): *Structural adequacy* / *Integrity* / *Insulation*			
	Class 2, 3 or 4 part	Class 5, 7a or 9	Class 6	Class 7b or 8
Bounding *public corridors*, public lobbies and the like	60/60/60	–/–/–	–/–/–	–/–/–
Between or bounding *sole-occupancy units*	60/60/60	–/–/–	–/–/–	–/–/–
Bounding a stair if *required* to be rated	60/60/60	60/60/60	60/60/60	60/60/60

Table S5C24e: Type C construction: FRL of roof

Location	FRL (in minutes): *Structural adequacy* / *Integrity* / *Insulation*			
	Class 2, 3 or 4 part	Class 5, 7a or 9	Class 6	Class 7b or 8
Roofs	–/–/–	–/–/–	–/–/–	–/–/–

S5C25 Type C fire-resisting construction — carparks

[2019: Spec C1.1: 5.2 and Table 5.2]

(1) Notwithstanding S5C24, a *carpark* may comply with this clause if it is an *open-deck carpark* or is protected with a sprinkler system (other than a FPAA101D or FPAA101H system) complying with Specification 17 and is—

(a) a separate building; or

(b) a part of a building, and if occupying only part of a *storey*, is separated from the remaining part by a *fire wall*.

(2) For the purposes of this clause, a *carpark*—

(a) includes—

(i) an administration area associated with the functioning of the *carpark*; and

(ii) where the *carpark* is sprinklered, is associated with a Class 2 or 3 building and provides carparking for separate *sole-occupancy units*, each carparking area with an area not greater than 10% of its *floor area* for purposes ancillary to the *sole-occupancy units*; but

(b) excludes—

(i) except for (a), any area of another classification, or other part of a Class 7 building not used for carparking; and

(ii) a building or part of a building specifically intended for the parking of trucks, buses, vans and the like.

(3) For building elements in a *carpark* as described in (1) and (2), the following minimum FRLs are applicable:

(a) *External walls*:

(i) Less than 1.5 m from a *fire-source feature* to which it is exposed:

(A) *Loadbearing*: 60/60/60.

(B) Non-*loadbearing*: –/60/60.

(ii) 1.5 m or more from a *fire-source feature* to which it is exposed: –/–/–.

(b) *Internal walls*: –/–/–.

(c) *Fire walls*:

(i) From the direction used as a *carpark*: 60/60/60.

(ii) From the direction not used as a *carpark*: 90/90/90.

(d) Columns:

(i) Steel column less than 1.5 m from a *fire-source feature*—

(A) 60/–/–; or

(B) ESA/M not greater than 26 m^2/tonne.

(ii) Any other column not less than 1.5 m from a *fire-source feature*: 60/–/–.

(iii) Any other column not covered by (i) or (ii): –/–/–.

(e) Beams:

(i) Steel floor beam, less than 1.5 m from a *fire-source feature*, in continuous contact with a concrete floor slab—

(A) 60/–/–; or

(B) an ESA/M of not greater than 30 m^2/tonne.

(ii) any other beam: 60/–/–.

(iii) more than 1.5 m from a *fire-source feature*: –/–/–.

(f) Roof, floor slab and vehicle ramp: –/–/–.

(4) For the purposes of (3), ESA/M means the ratio of exposed surface area to mass per unit length.

Specification 6 Structural tests for lightweight construction

S6C1 Scope

[2019: Spec C1.8: 1]

This Specification describes tests to be applied to and criteria to be satisfied by a wall system of *lightweight construction*.

S6C2 Application

[2019: Spec C1.8: 2]

A wall system need not be tested in accordance with this Specification for static pressure or impact if it is designed and constructed in accordance with the *Deemed-to-Satisfy Provisions* of Part B1 to resist the appropriate pressures and impacts defined in this Specification.

Tests

S6C3 Walls of certain Class 9b buildings

[2019: Spec C1.8: 3.1]

(1) *Lightweight construction* forming—

(a) a wall of a lift *shaft* and stair *shaft*; and

(b) an *external* and *internal wall* bounding a *public corridor*, public lobby or the like, including a *fire-isolated* and non *fire-isolated passageway* or *ramp*,

in spectator stand, sports stadium, cinema or theatre, railway or bus station or airport terminal, must be subjected to the tests and must fulfil the criteria set out in (2).

(2) For the purposes of (1), the following tests and criteria apply:

(a) The materials tests of S6C10(a) and the criteria of S6C11(a).

(b) A static test by the imposition of a uniformly distributed load of 1.0 kPa (or its equivalent) in accordance with S6C10(b) and the damage and deflection criteria of S6C11(b) and (c) respectively.

(c) A dynamic test by the fall of the impact bag through a height of 350 mm in accordance with S6C10(c) and the damage and deflection criteria of S6C11(b) and (d) respectively.

(d) The surface indentation test of S6C10(d) and the surface indentation criterion of S6C11(e).

S6C4 Walls of shafts and fire-isolated exits generally

[2019: Spec C1.8: 3.2]

A wall of *lightweight construction* that is required to be *fire-resisting* and which bounds a lift *shaft*, stair *shaft*, or service *shaft*, *fire-isolated passageway* or *fire-isolated ramp* must be subjected to the following tests and must fulfil the following criteria:

(a) The materials tests of S6C10(a) and the criteria of S6C11(a).

(b) A static test by the imposition of a uniformly distributed load of 0.35 kPa (or its equivalent) in accordance with S6C10(b) and the damage and deflection criteria of S6C11(b) and (c) respectively.

(c) A dynamic test by the fall of the impact bag through a height of 150 mm in accordance with S6C10(c) and the damage and deflection criteria of S6C11(b) and (d) respectively.

(d) The surface indentation test of S6C10(d) and the surface indentation criterion of S6C11(e).

S6C5 Additional requirements for lift shafts

[2019: Spec C1.8: 3.3]

(1) In addition to the requirements of S6C3 and S6C4, a wall system for use in a lift *shaft* that is *required* to be *fire-resisting* must be subjected to dynamic test by the imposition of—

(a) where the lift car speed is 7 m/s or less — 10^6 cycles of a uniformly distributed load between 0 and 0.2 kPa (or its equivalent); or

(b) where the lift car speed is greater than 7 m/s — 10^6 cycles of a uniformly distributed load between 0 and 0.35 kPa (or its equivalent) in accordance with S6C10(e) and must fulfil the damage criteria of S6C11(b).

(2) The wall system must be subjected to the static test in accordance with S6C4(b) after the successful conclusion of the dynamic test specified in (1).

S6C6 Walls generally

[2019: Spec C1.8: 3.4]

An *external* and *internal wall* of *lightweight construction* that is *required* to be *fire-resisting*, other than one covered by S6C3, S6C4 or S6C5, must be subjected to the following tests and must fulfil the following criteria:

(a) The materials tests of S6C10(a) and the criteria of S6C11(a).

(b) A static test by the imposition of a uniformly distributed load of 0.25 kPa (or its equivalent) in accordance with S6C10(b) and the damage and deflection criteria of S6C11(b) and (c) respectively.

(c) A dynamic test by fall of the impact bag through a height of 100 mm in accordance with S6C10(c) and the damage and deflection criteria of S6C11(b) and (d) respectively.

(d) The surface indentation test of S6C10(d) and the surface indentation criterion of S6C11(e).

Test Specimens

S6C7 General requirements for testing

[2019: Spec C1.8: 4.1]

Testing must be carried out on either—

(a) construction in-situ; or

(b) a laboratory specimen of the construction.

S6C8 Testing in-situ

[2019: Spec C1.8: 4.2]

If testing is carried out in-situ, it must be done on that part of the construction least likely, because of the particular combination of the height of the walls, the support conditions and other aspects of the construction, to resist the loads.

S6C9 Testing of specimens

[2019: Spec C1.8: 4.3]

If a laboratory specimen is tested, the specimen must span only in the direction corresponding to the height of the wall and testing must be done in accordance with either (a) or (b) below:

(a) The test specimen—

(i) height (or length, if the specimen is tested horizontally) must be identical with the height between supports in the actual construction; and

(ii) must be supported at the top and bottom (or at each end if tested horizontally) by components identical

with, and in a manner identical with, the actual construction.

(b) If the distance between supports of the actual construction is more than 3 m, then a smaller specimen may be tested but—

(i) the distance between supports must be not less than 3 m; and

(ii) forces, reactions and support conditions must be modelled so as to reproduce the behaviour of the actual construction if it were tested in-situ.

Test Methods and Compliance Criteria

S6C10 Test methods

[2019: Spec C1.8: 5]

Tests must be carried out in accordance with the following:

(a) Material tests — The methods specified for the constituent materials of the construction of the standards adopted by reference in the NCC.

(b) For resistance to static pressure — The provisions for testing walls under transverse load in ASTM E72-15, except that—

(i) support conditions must be as specified in S6C9; and

(ii) equivalent load shall mean the quarter-point load that produces the same deflection or central moment as appropriate; and

(iii) the timber species nominated in that standard may be substituted with a different species.

(c) For resistance to impact — The provisions for testing wall systems in ASTM E695-03, except that—

(i) the point of impact must be set 1.5 m above finished floor level or 1.5 m above the part of the specimen that corresponds to finished floor level; and

(ii) the impact bag must be not less than 225 mm in diameter and not more than 260 mm in diameter and have a mass of not less than 27.2 kg or more than 27.3 kg; and

(iii) the mass must be achieved by putting loose, dry sand into the bag and must be adjusted before each series of impact tests; and

(iv) where the impact bag and suspension cannot be vertical at the instant of impact on a curved surface or an inclined surface, the height of drop is the net height at the point of impact.

(d) For resistance to surface indentation — The test for resistance to surface indentation must be carried out at three points on the surface of an undamaged sample sheet as follows:

(i) A steel ball of 10 mm diameter with a load of 150 N must be placed gently on the surface of the sheet and allowed to remain in position for 5 minutes.

(ii) The ball and load must then be removed and the diameter of each impression of the ball on the surface measured.

(e) For resistance of lift shaft construction to repetitive load — As for (b) except that—

(i) it is sufficient to test one specimen with the pressure applied from the side of the construction on which the lift will operate; and

(ii) the load must be applied dynamically at a frequency not less than 1 Hz and not more than 3 Hz; and

(iii) equivalent load shall mean the quarter-point load that produces the same central moment as the distributed load.

S6C11 Criteria for compliance

[2019: Spec C1.8: 6]

The wall system or the specimen of it must fulfil the following criteria:

(a) Materials — Materials must comply with the applicable standard adopted by reference in the NCC.

(b) Damage — There must be no crack, penetration or permanent surface-deformation to a depth of more than 0.5 mm or any other non-elastic deformation or fastener failure.

(c) Deflection — Static pressure — Under static pressure the deflection must not be more than—

  (i) 1/240th of the height between supports; or

  (ii) for construction other than a lift *shaft* — 30 mm; or

  (iii) for a lift *shaft* — 20 mm.

(d) Deflection — Impact — Under impact the instantaneous deflection must not be more than—

  (i) 1/120th of the height of the wall between supports; or

  (ii) for construction other than a lift *shaft* — 30 mm; or

  (iii) for a lift *shaft*— 20 mm.

(e) Surface indentation — No impression must be more than 5 mm in diameter.

Specification 7 Fire hazard properties

S7C1 Scope

[2019: Spec C1.10: 1]

This Specification sets out requirements in relation to the *fire hazard properties* of linings, materials and assemblies in Class 2 to 9 buildings as set out in Table S7C2.

S7C2 Application

[2019: Spec C1.10: 2]

Linings, materials and assemblies must comply with the appropriate requirement described in Table S7C2.

Table S7C2: Fire hazard property requirements

Lining, material or assembly	Requirement
Floor linings and floor coverings	S7C3
Wall linings and ceiling linings	S7C4
Air-handling ductwork	S7C5
Lift cars	S7C6
In fire control rooms subject to Specification 6 and fire isolated *exits*	S7C7
In Class 9b buildings used as a theatre, public hall or the like — fixed seating in the audience area or auditorium; and a proscenium curtain *required* by Specification 32	S7C7
Escalators, moving walkways and non-*required* non-*fire-isolated stairways* or pedestrian ramps subject to Specification 14	S7C7
Sarking-type material	S7C7
Attachments to internal floors, walls and ceilings	S7C7
Other materials including insulation	S7C7

S7C3 Floor linings and floor coverings

[2019: Spec C1.10: 3]

A floor lining or floor covering must have—

(a) a *critical radiant flux* not less than that listed in Table S7C3; and

(b) in a building not protected by a sprinkler system (other than a FPAA101D or FPAA101H system) complying with Specification 17, a maximum *smoke development rate* of 750 percent-minutes; and

(c) a *group number* complying with S7C6(b), for any portion of the floor covering that is continued more than 150 mm up a wall.

Table S7C3: Critical radiant flux (CHF in kW/m^2) of floor linings and floor coverings

Class of building	Building not fitted with a sprinkler system (other than a FPAA101D or FPAA101H system) complying with Specification 17	Building fitted with a sprinkler system (other than a FPAA101D or FPAA101H system) complying with Specification 17	Fire-isolated *exits* and fire control rooms
Class 2, 3, 5, 6, 7, 8 or 9b, excluding Class 3 accommodation for the aged and Class 9b as specified below	2.2 kW/m^2	1.2 kW/m^2	2.2 kW/m^2
Class 3 accommodation for the aged	4.5 kW/m^2	2.2 kW/m^2	4.5 kW/m^2
Class 9a *patient care areas*	4.5 kW/m^2	2.2 kW/m^2	4.5 kW/m^2
Class 9a areas other than *patient care areas*	2.2 kW/m^2	1.2 kW/m^2	4.5 kW/m^2
Class 9b auditorium or audience seating area used mainly for indoor swimming or ice skating	1.2 kW/m^2	1.2 kW/m^2	2.2 kW/m^2
Class 9b auditorium or audience seating area used mainly for other sports or multi-purpose functions	2.2 kW/m^2	1.2 kW/m^2	2.2 kW/m^2
Class 9c *resident use area*	N/A	2.2 kW/m^2	4.5 kW/m^2
Class 9c areas other than *resident use areas*	N/A	1.2 kW/m^2	4.5 kW/m^2

S7C4 Wall and ceiling linings

[2019: Spec C1.10: 4]

(1) A wall or ceiling lining system must comply with the *group number* specified in Table S7C4 and for buildings not fitted with a sprinkler system (other than a FPAA101D or FPAA101H system) complying with Specification 17 have—

(a) a *smoke growth rate index* not more than 100; or

(b) an *average specific extinction area* less than 250 m^2/kg.

(2) A *group number* of a wall or ceiling lining and the *smoke growth rate index* or *average specific extinction area* must be determined in accordance with AS 5637.1.

Table S7C4: Wall and ceiling lining materials (material groups permitted)

Class of building	Fire-isolated *exits* and fire control rooms	Public corridors	Specific areas	Other areas
Class 2 or 3, unsprinklered, excluding accommodation for the aged, people with disabilities and children	Walls: 1	Walls: 1, 2	Walls: 1, 2, 3	Walls: 1, 2, 3
	Ceilings: 1	Ceilings: 1, 2	Ceilings: 1, 2, 3	Ceilings: 1, 2, 3
Class 2 or 3, sprinklered, excluding accommodation for the aged, people with	Walls: 1	Walls: 1, 2, 3	Walls: 1, 2, 3	Walls: 1, 2, 3
	Ceilings: 1	Ceilings: 1, 2, 3	Ceilings: 1, 2, 3	Ceilings: 1, 2, 3

Class of building	Fire-isolated *exits* and fire control rooms	Public corridors	Specific areas	Other areas
disabilities and children				
Class 3 or 9a, unsprinklered, accommodation for the aged, people with a disability, children and *health-care buildings*	Walls: 1	Walls: 1	Walls: 1, 2	Walls: 1, 2, 3
	Ceilings: 1	Ceilings: 1	Ceilings: 1, 2	Ceilings: 1, 2, 3
Class 3 or 9a, sprinklered, accommodation for the aged, people with a disability, children and *health-care buildings*	Walls: 1	Walls: 1, 2	Walls: 1, 2, 3	Walls: 1, 2, 3
	Ceilings: 1	Ceilings: 1, 2	Ceilings: 1, 2, 3	Ceilings: 1, 2, 3
Class 5, 6, 7, 8 or 9b *schools*, unsprinklered	Walls: 1	Walls: 1, 2	Walls: 1, 2, 3	Walls: 1, 2, 3
	Ceilings: 1	Ceilings: 1, 2	Ceilings: 1, 2	Ceilings: 1, 2, 3
Class 5, 6, 7, 8 or 9b *schools*, sprinklered	Walls: 1	Walls: 1, 2, 3	Walls: 1, 2, 3	Walls: 1, 2, 3
	Ceilings: 1	Ceilings: 1, 2, 3	Ceilings: 1, 2, 3	Ceilings: 1 ,2, 3
Class 9b other than *schools*, unsprinklered	Walls: 1	Walls: 1	Walls: 1, 2	Walls: 1, 2, 3
	Ceilings: 1	Ceilings: 1	Ceilings: 1, 2	Ceilings: 1, 2, 3
Class 9b other than *schools*, sprinklered	Walls: 1	Walls: 1, 2	Walls: 1, 2, 3	Walls: 1, 2, 3
	Ceilings: 1	Ceilings: 1, 2	Ceilings: 1, 2, 3	Ceilings: 1, 2, 3
Class 9c, sprinklered	Walls: 1	Walls: 1, 2	Walls: 1, 2, 3	Walls: 1, 2, 3
	Ceilings: 1	Ceilings: 1, 2	Ceilings: 1, 2, 3	Ceilings: 1, 2, 3

Table Notes

(1) "Sprinklered" means a building fitted with a sprinkler system (other than a FPAA101D or FPAA101H system) complying with Specification 17.

(2) "Specific areas" means within—

(i) for Class 2 and 3 buildings, a *sole-occupancy unit*; and

(ii) for Class 5 buildings, open plan offices with a minimum floor dimension/floor to ceiling height ratio > 5; and

(iii) for Class 6 buildings, shops or other building with a minimum floor dimension/floor to ceiling height ratio > 5; and

(iv) for Class 9a *health-care buildings*, *patient care areas*; and

(v) for Class 9b theatres and halls, etc, an auditorium; and

(vi) for Class 9b *schools*, a classroom; and

(vii) for Class 9c buildings, *resident use area*.

S7C5 Air-handling ductwork

[2019: Spec C1.10: 5]

Rigid and flexible ductwork in a Class 2 to 9 building must comply with the *fire hazard properties* set out in AS 4254.1 and AS 4254.2.

S7C6 Lift cars

[2019: Spec C1.10: 6]

Materials used as—

(a) floor linings and floor coverings must have a *critical radiant flux* not less than 2.2; and

(b) wall and ceiling linings must be a Group 1 material or a Group 2 material in accordance with AS 5637.1.

S7C7 Other materials

[2019: Spec C1.10: 7]

Materials and assemblies not included in S7C3, S7C4, S7C5 or S7C6 must not exceed the indices set out in Table S7C7.

NSW Table S7C7

Table S7C7: Other materials

Material or assembly location	*Flammability Index*	*Spread-of-Flame Index*	*Smoke-Developed Index*
Fire control rooms subject to Specification 19 and fire-isolated *exits*, other than a *sarking-type material* used in a ceiling or used as an attachment or part of an attachment to a building element. Note 1	N/A	0	2
Class 9b buildings used as a theatre, public hall or the like: Any part of fixed seating in the audience area or auditorium.	N/A	0	5
Class 9b buildings used as a theatre, public hall or the like: A proscenium curtain *required* by Specification 32.	N/A	0	3
Escalators, moving walkways or non-*required* non *fire-isolated stairway* or pedestrian ramps subject to Specification 14.	N/A	0	5
Sarking-type materials: In a fire control room subject to Specification 19 or a fire-isolated *exit* or fire control room used in the form of an exposed wall or ceiling.	0	N/A	N/A
Sarking-type materials: In other locations. Note 2	5	N/A	N/A
Other materials or locations and insulation materials other than *sarking-type material*. Notes 2 and 3	N/A	9	8 if the *Spread-of-Flame Index* is more than 5

Table Notes

(1) In a fire control room or *fire-isolated stairway*, a material used as an attachment or part of an attachment to a

building element must, if *combustible*, be attached directly to a *non-combustible* substrate and not exceed 1 mm finished thickness.

(2) A material, other than one located within a fire-isolated *exit* or fire control room, may be covered on all faces by concrete or masonry not less than 50 mm thick, as an alternative to meeting the specified indices.

(3) In the case of a composite member or assembly, the member or assembly must be constructed so that when assembled as proposed in a building—

(a) any material which does not comply with this Table is protected on all sides and edges from exposure to the air; and

(b) the member or assembly, when tested in accordance with Specification 3, has *Spread-of-Flame Index* and *Smoke-Developed Index* not exceeding those prescribed in this Table; and

(c) the member or assembly retains the protection in position so that it prevents ignition of the material and continues to screen it from access to free air for a period of not less than 10 minutes.

Specification 8 Performance of external walls in fire

S8C1 Scope

[2019: Spec C1.11: 1]

This Specification contains measures to minimise, in the event of fire, the likelihood of *external walls* covered by S8C2 collapsing outwards as complete panels and the likelihood of panels separating from supporting members.

S8C2 Application

[2019: Spec C1.11: 2]

This Specification applies to buildings having a *rise in storeys* of not more than 2 with concrete *external walls* that could collapse as complete panels (e.g. tilt-up and precast concrete) which—

(a) consist of either single or multiple panels attached by steel connections to lateral supporting members; and

(b) depend on those connections to resist outward movement of the panels relative to the supporting members; and

(c) have height to thickness ratio not greater than 50.

S8C3 General requirements for external wall panels

[2019: Spec C1.11: 3]

(1) Cast-in inserts and fixings must be anchored into the panel with welded bars or be fixed to the panel reinforcement.

(2) Cast-in inserts for top connections and fixings acting together must be able to resist an ultimate load of two times the larger of the forces *required* to develop—

(a) the ultimate bending moment capacity of the panel at its base; or

(b) the overturning moment at the base of the panel arising from an outwards lateral displacement at the top of the panel equal to one tenth of the panel height.

(3) Top connections of the panel exposed to fire, such as clips and drilled-in inserts, acting together must be able to resist an ultimate load of six times the larger of the forces *required* to develop the moment specified in (2)(a) or (b).

(4) Lateral supporting members and their connections must be designed to resist the connection forces specified in (2) and (3) and in the case of an eaves tie member the force in the member must be determined assuming that it deforms in a manner compatible with the lateral displacement of the wall panels, and that it acts in tension only.

(5) *External wall* panels that span vertically must have at least two upper connections per panel to the supporting member, except that where a number of panels are designed to act as one unit, (e.g. tongue and groove hollow-core panels), only two upper connections are *required* for each unit.

(6) *External wall* panels that span horizontally between columns must have at least two connections at each column.

(7) Connections providing lateral support to a panel must be designed to remain engaged to the supported panel both before and during a fire.

Notes

The increased forces specified by the multiplier of two or six in (2) and (3) above are to take account of the lower strength of the connections and members at the higher than ambient temperatures expected in a fire.

S8C4 Additional requirements for vertically spanning external wall panels adjacent to columns

[2019: Spec C1.11: 4]

(1) Where vertically spanning *external wall* panels are located adjacent to columns, connections to the panels must be located and/or detailed to minimise forces that may develop between the panels and columns arising from the restraint of differential displacement.

(2) The requirements of (1) are satisfied by—

(a) detailing the connections and/or the supporting member to sustain a relative outward displacement of (d) between the panels and columns at the connection height where d(m) is calculated as—

(i) the square of the connection height (m) divided by one hundred and twenty-five, when the connection height is less than 5 m; or

(ii) the connection height (m) divided by twenty-five, when the connection height (m) is greater than or equal to 5 m; or

(b) in situations where an eaves tie member is used to provide lateral support to *external wall* panels, the tie member is connected to the panels no closer than a distance (s) from the column where s(m) is taken as one quarter of the panel height (m).

Specification 9 Cavity barriers for fire-protected timber

S9C1 Scope

[2019: Spec C1.13: 1]

This Specification sets out requirements for cavity barriers in *fire-protected timber* construction.

S9C2 Requirements

[2019: Spec C1.13: 2]

(1) Cavity barriers must be provided in the following locations where *fire-protected timber* is used in any of the listed elements:

(a) At concealed cavities adjacent to junctions between *fire-resisting* floor/ceiling assemblies and *fire-resisting* walls.

(b) At concealed cavities adjacent to junctions between *fire-resisting* floor/ceiling assemblies and *fire-resisting* or *non-combustible external walls*.

(c) At concealed cavities adjacent to junctions between *fire-resisting* walls and *fire-resisting* or *non-combustible external walls*.

(d) Around the perimeter of door and window openings in *fire-resisting* construction.

(2) Cavity barriers must be installed so they are tight fitting and are able to withstand thermal expansion and structural movement without the loss of seal against fire and smoke.

(3) In addition to cavity barriers *required* by (1), horizontal and vertical cavity barriers are to be provided to wall cavities within, around or adjacent to *fire-protected timber* elements as follows:

(a) Horizontal cavity barriers — at not more than 5 m centres.

(b) Vertical cavity barriers — at not more than 10 m centres.

(4) Cavity barriers must—

(a) achieve the performance specified in Table S9C2 based on the highest FRL of the elements they are mounted within or seal against; or

(b) consist of—

(i) timber with the minimum thickness specified in Table S9C2; or

(ii) polythene-sleeved mineral wool or mineral wool slabs or strips placed under compression to achieve the minimum thickness specified in Table S9C2.

(5) Cavity barriers provided around openings may be formed by the window or door frame if—

(a) the frame is constructed of steel or timber with the minimum thickness specified in Table S9C2 for timber; and

(b) the frame is tightly fitted to rigid construction and mechanically fixed in position.

(6) The FRL of cavity barriers in *fire-protected timber* construction must be determined in accordance with Specifications 1 and 2 applying the criteria for control joint systems specified in Section 10 of AS 1530.4 with the cavity barrier system fitted within an opening between timber members exposed directly to the furnace heating conditions.

(7) Notwithstanding anything to the contrary in Specifications 1 and 2 or AS 1530.4, the test results from (6) may be used when the *fire-protected timber* is constructed from timber having a nominal density at least equal to the tested timber.

Table S9C2: Cavity barrier requirements

System *required* FRL	–/60/60 or –/90/90	–/120/120, –/180/180 or –/240/240
Cavity barrier *required* FRL	–/45/45	–/60/60
Timber, *required* minimum thickness	45 mm	60 mm

System *required* FRL	–/60/60 or –/90/90	–/120/120, –/180/180 or –/240/240
Mineral wool, *required* minimum thickness	45 mm	60 mm

Table Notes

Minimum thicknesses are to be measured in the direction of heat flow.

Specification 10 Fire-protected timber

S10C1 Scope

[2019: Spec C1.13a: 1]

This Specification contains requirements for *fire-protected timber* and procedures for determining the time at which the temperature at the interface between the protection system and the timber is exceeded.

Requirements

S10C2 General requirements

[2019: Spec C1.13a: 2.1]

(1) *Fire-protected timber* must—

(a) utilise a *non-combustible fire-protective covering* fixed in accordance with the system requirements to achieve an FRL not less than that *required* for the building element; and

(b) have a *non-combustible fire-protective covering* fixed in accordance with system requirements—

(i) to achieve a *resistance to the incipient spread of fire* of not less than 45 minutes when tested in accordance with—

(A) for horizontal elements — Section 4 of AS 1530.4; and

(B) for other elements — the relevant test procedures from Section 4 of AS 1530.4 applied to the element lining; or

(ii) which consists of not less than 2 layers of 13 mm thick, fire-protective grade plasterboard.

(2) For the purposes of (1), the *non-combustible fire-protective covering* provided under (1)(b) may form all or part of the *non-combustible fire-protective covering* provided under (1)(a).

S10C3 Massive timber

[2019: Spec C1.13a: 2.2]

(1) *Fire-protected timber*, where the timber is *massive timber*, need not comply with S10C2 if the *fire-protected timber*—

(a) utilises a *non-combustible fire-protective covering* fixed in accordance with system requirements to achieve an FRL not less than that *required* for the building element; and

(b) has a *non-combustible fire-protective covering* fixed in accordance with system requirements—

(i) so as the temperature at the interface between the protection system and the timber does not exceed 300°C during a fire resistance test performed in accordance with S10C4, S10C5 and S10C6 for the application and periods listed in Table S10C3; or

(ii) not less than that specified by Table S10C3; and

(c) has any cavity filled with *non-combustible insulation*, or no cavity, between—

(i) the surface of the timber and the *fire-protective covering*; or

(ii) timber elements within the *fire-protective covering*.

(2) For the purposes of (1), the *non-combustible fire-protective covering* provided under (1)(b) may form all or part of the *non-combustible fire-protective covering* provided under (1)(a).

Table S10C3: Interface temperature and minimum fire protective grade plasterboard thickness

Application	Time – without timber interface exceeding 300°C (mins)	Minimum thickness of fire-grade plasterboard (mm)
Inside a *fire-isolated stairway* or lift shaft	20	13
External walls within 1 m of an allotment boundary or 2 m of a building on the same allotment	45	2 x 13
All other applications	30	16

Determination of time the timber interface temperature exceeds 300°C for timber at least 75 mm thick

S10C4 Form of test

[2019: Spec C1.13a: 3.1]

(1) Tests must be carried out in accordance with the *Standard Fire Test*, or an equivalent or more severe test, on the timber element with the proposed *non-combustible* coverings fixed in a representative manner, with the time the timber interface temperatures exceeded 300°C confirmed in a report from an *Accredited Testing Laboratory*.

(2) If a fire protection system incorporates joints, the test specimens must incorporate representative joints.

(3) Interface temperatures must be measured over the following features by a minimum of two thermocouples:

(a) At joint positions in the protection systems.

(b) At least 200 mm from any joint.

(c) At service penetrations.

(d) At any other locations where, in the opinion of the *Accredited Testing Laboratory*, the interface temperature may be higher than the above positions.

(4) The temperatures must be measured in accordance with Appendix C1 and Section 2 of AS 1530.4 as appropriate.

S10C5 Smaller specimen permitted

[2019: Spec C1.13a: 3.2]

An *Accredited Testing Laboratory* may carry out the test specified in S10C4 at pilot scale provided—

(a) a specimen (which must be not less than 1000 mm x 1000 mm) adequately represents the proposed construction in the building; and

(b) the fire resistance of the specimen has already been determined in a full scale test performed in accordance with AS 1530.4 to demonstrate adequate retention of the fire protection system in conjunction with the timber elements being protected; and

(c) the results of the test do not apply to construction larger than limits defined by the *Accredited Testing Laboratory* conducting the pilot examination.

S10C6 Acceptance criteria

[2019: Spec C1.13a: 3.3]

The time the timber interface temperature exceeds 300°C must be taken as the minimum time any of the thermocouples specified in S10C4 exceeded 300°C.

Specification 11 Smoke-proof walls in health-care and residential care buildings

S11C1 Scope

[2019: Spec C2.5: 1]

(1) This Specification sets out requirements for the construction of smoke-proof walls in Class 9a *health-care buildings* and Class 9c buildings.

(2) Smoke proof walls *required* to have an FRL are to be in accordance with A5G5.

S11C2 Class 9a health-care buildings

[2019: Spec C2.5: 2]

Smoke-proof walls *required* by C3D6 in Class 9a *health-care buildings* must comply with the following:

(a) Be *non-combustible* and extend to the underside of—

(i) the floor above; or

(ii) a *non-combustible* roof covering; or

(iii) a ceiling having a *resistance to the incipient spread of fire* to the space above itself of not less than 60 minutes.

(b) Not incorporate any glazed areas unless the glass is safety glass as defined in AS 1288.

(c) Only have doorways which are fitted with smoke doors complying with Specification 12.

(d) Have all openings around penetrations and the junctions of the smoke-proof wall and the remainder of the building stopped with *non-combustible* material to prevent the free passage of smoke.

(e) Incorporate smoke dampers where air-handling ducts penetrate the wall unless the duct forms part of a smoke hazard management system *required* to continue air movement through the duct during a fire.

S11C3 Class 9c buildings

[2019: Spec C2.5: 3]

Smoke-proof walls *required* by C3D6 in Class 9c buildings must comply with the following:

(a) The wall may be lined on one side only.

(b) Linings on the wall must be *non-combustible* and extend to the underside of—

(i) the floor above; or

(ii) a *non-combustible* roof covering; or

(iii) a flush plasterboard ceiling lined with 13 mm standard grade plasterboard or a *fire-protective covering*, with all penetrations sealed against the free passage of smoke.

(c) If plasterboard is used in the lining on a wall, it must be a minimum of 13 mm standard grade plasterboard.

(d) Not incorporate any glazed areas unless the glass is safety glass as defined in AS 1288.

(e) Only have doorways which are fitted with smoke doors complying with Specification 12.

(f) Have all openings around penetrations and the junctions of the smoke-proof wall and the remainder of the building stopped with *non-combustible* material to prevent the free passage of smoke.

(g) Incorporate smoke dampers where air-handling ducts penetrate the wall unless the duct forms part of a smoke hazard management system *required* to continue air movement through the duct during a fire.

S11C4 Doorways in smoke-proof walls

[2019: Spec C2.5: 4]

A door *required* by C3D6 or this Specification to be smoke-proof or have an FRL, other than one that serves a *fire compartment* provided with a zone pressurisation system in accordance with AS 1668.1, must provide a smoke reservoir by not extending within 400 mm of the underside of—

(a) a roof covering; or

(b) the floor above; or

(c) an imperforate false ceiling that will prevent the free passage of smoke.

Specification 12 Fire doors, smoke doors, fire windows and shutters

S12C1 Scope

[2019: Spec C3.4: 1]

This Specification sets out requirements for the construction of fire doors, smoke doors, fire *windows* and fire shutters.

S12C2 Fire doors

[2019: Spec C3.4: 2]

A *required* fire door must—

(a) comply with AS 1905.1; and

(b) not fail by radiation through any glazed part during the period specified for *integrity* in the *required* FRL.

S12C3 General requirements for smoke doors

[2019: Spec C3.4: 3.1]

Smoke doors must be constructed so that smoke will not pass from one side of the doorway to the other and, if they are glazed, there is minimal danger of a person being injured by accidentally walking into them.

S12C4 Construction Deemed-to-Satisfy for smoke doors

[2019: Spec C3.4: 3.2]

A smoke door of one or two leaves satisfies S12C3 if it is constructed as follows:

(a) The leaves are side-hung to swing—

(i) in the direction of egress; or

(ii) in both directions.

(b) The leaves are solid-core and at least 35 mm thick, or are capable of resisting smoke at 200°C for 30 minutes.

(c) The leaves are fitted with smoke seals.

(d) The leaves—

(i) are normally in the closed position; or

(ii) operate such that—

(A) they are closed *automatically* with the *automatic* closing operation initiated by smoke detectors, installed in accordance with the relevant provisions of AS 1670.1, located on each side of the doorway not more than 1.5 m horizontal distance from the doorway; and

(B) in the event of power failure to the door, they will fail-safe in the closed position.

(e) The leaves return to the fully closed position after each manual opening.

(f) Any glazing incorporated in the door complies with AS 1288.

(g) If a glazed panel is capable of being mistaken for an unobstructed *exit*, the presence of the glass must be identified by an opaque mid-height band, mid-rail, crash-bar or other opaque construction.

S12C5 Fire shutters

[2019: Spec C3.4: 4]

A *required* fire shutter must—

(a) be a shutter that—

(i) is identical with a tested prototype that has achieved the *required* FRL; and

(ii) is installed in the same manner and in an opening that is not larger than the tested prototype; and

(iii) did not have a rise in average temperature on the side remote from the furnace of more than 140 K during the first 30 minutes of the test; or

(b) be a steel shutter complying with AS 1905.2 if a metallic fire shutter is not prohibited by C4D6.

S12C6 Fire windows

[2019: Spec C3.4: 5]

A *required* fire *window* must be—

(a) identical in construction with a prototype that has achieved the *required* FRL; and

(b) installed in the same manner and in an opening that is not larger than the tested prototype.

Specification 13 Penetration of walls, floors and ceilings by services

S13C1 Scope

[2019: Spec C3.15: 1]

This Specification prescribes materials and methods of installation for services that penetrate walls, floors and ceilings *required* to have an FRL.

S13C2 Application

[2019: Spec C3.15: 2]

(1) This Specification applies to installations permitted under the *Deemed-to-Satisfy Provisions* of the NCC as alternatives to systems that have been demonstrated by test to fulfil the requirements of C4D15(2)(a).

(2) This Specification does not apply to installations in ceilings *required* to have a *resistance to the incipient spread of fire* nor to the installation of piping that contains or is intended to contain a flammable liquid or gas.

S13C3 Metal pipe systems

[2019: Spec C3.15: 3]

(1) A pipe system comprised entirely of metal (excluding pipe seals or the like) that is not normally filled with liquid must not be located within 100 mm, for a distance of 2 m from the penetration, of any *combustible* building element or a position where *combustible* material may be located, and must be constructed of—

(a) copper alloy or stainless steel with a wall thickness of at least 1 mm; or

(b) cast iron or steel (other than stainless steel) with a wall thickness of at least 2 mm.

(2) An opening for a pipe system comprised entirely of metal (excluding pipe seals or the like) must—

(a) be neatly formed, cut or drilled; and

(b) be no closer than 200 mm to any other service penetration; and

(c) accommodate only one pipe.

(3) A pipe system comprised entirely of metal (excluding pipe seals or the like) must be wrapped but must not be lagged or enclosed in thermal insulation over the length of its penetration of a wall, floor or ceiling unless the lagging or thermal insulation fulfils the requirements of S13C7.

(4) The gap between a metal pipe and the wall, floor or ceiling it penetrates must be fire-stopped in accordance with S13C7.

S13C4 Pipes penetrating sanitary compartments

[2019: Spec C3.15: 4]

If a pipe of metal or UPVC penetrates the floor of a *sanitary compartment* in accordance with C4D15(2)(c)(ii)—

(a) the opening must be neatly formed and no larger than is necessary to accommodate the pipe or fitting; and

(b) the gap between pipe and floor must be fire-stopped in accordance with S13C7.

S13C5 Wires and cables

[2019: Spec C3.15: 5]

If a wire or cable or cluster of wires or cables penetrates a floor, wall or ceiling—

(a) the opening must be neatly formed, cut or drilled and no closer than 50 mm to any other service; and

(b) the opening must be no larger in cross-sectional area than—

(i) 2000 mm^2 if only a single cable is accommodated and the gap between cable and wall, floor or ceiling is no wider than 15 mm; or

(ii) 500 mm^2 in any other case; and

(c) the gap between the service and the wall, floor or ceiling must be fire-stopped in accordance with S13C7.

S13C6 Electrical switches and outlets

[2019: Spec C3.15: 6]

If an electrical switch, outlet, socket or the like is accommodated in an opening or recess in a wall, floor or ceiling—

(a) the opening or recess must not—

(i) be located opposite any point within 300 mm horizontally or 600 mm vertically of any opening or recess on the opposite side of the wall; or

(ii) extend beyond half the thickness of the wall; and

(b) the gap between the service and the wall, floor or ceiling must be fire-stopped in accordance with S13C7.

S13C7 Fire-stopping

[2019: Spec C3.15: 7]

(1) Material: The material used for the fire-stopping of service penetrations must be concrete, high-temperature mineral fibre, high-temperature ceramic fibre or other material that does not flow at a temperature below 1120°C when tested in accordance with ISO 540, and must have—

(a) demonstrated in a system tested in accordance with C4D15(2)(a) that it does not impair the *fire-resisting* performance of the building element in which it is installed; or

(b) demonstrated in a test in accordance with (5) that it does not impair the *fire-resisting* performance of the test slab.

(2) Installation: Fire-stopping material must be packed into the gap between the service and wall, floor or ceiling in a manner, and compressed to the same degree, as adopted for testing under (1)(a) or (b).

(3) Hollow construction: If a pipe penetrates a hollow wall (such as a stud wall, a cavity wall or a wall of hollow blockwork) or a hollow floor/ceiling system, the cavity must be so framed and packed with fire-stopping material that is—

(a) installed in accordance with (2) to a thickness of 25 mm all round the service for the full length of the penetration; and

(b) restrained, independently of the service, from moving or parting from the surfaces of the service and of the wall, floor or ceiling.

(4) Recesses: If an electrical switch, socket, outlet or the like is accommodated in a recess in a hollow wall or hollow floor/ceiling system—

(a) the cavity immediately behind the service must be framed and packed with fire-stopping material in accordance with (3); or

(b) the back and sides of the service must be protected with refractory lining board identical with and to the same thickness as that in which the service is installed.

(5) Test: The test to demonstrate compliance of a fire-stopping material with this Specification must be conducted as follows:

(a) The test specimen must comprise a concrete slab not less than 1 m square and not more than 100 mm thick, and appropriately reinforced if necessary for *structural adequacy* during manufacture, transport and testing.

(b) The slab must have a hole 50 mm in diameter through the centre and the hole must be packed with the fire-stopping material.

(c) The slab must be conditioned in accordance with AS 1530.4.

(d) Two thermocouples complying with AS 1530.4 must be attached to the upper surface of the packing each about 5 mm from its centre.

(e) The slab must be tested on flat generally in accordance with Section 10 of AS 1530.4 and must achieve an FRL of 60/60/60 or as otherwise *required*.

Section D Access and egress

Part D1 Access and egress

Objectives

D1O1 Objective

Functional Statements

D1F1 Access

D1F2 Egress

Performance Requirements

D1P1 Access for people with a disability

D1P2 Safe movement to and within a building

D1P3 Fall prevention barriers

D1P4 Exits

D1P5 Fire-isolated exits

D1P6 Paths of travel to exits

D1P7 Evacuation lifts

D1P8 Carparking for people with a disability

D1P9 Communication systems for people with hearing impairment

Verification Methods

D1V1 Wire barriers

D1V2 Access to and within a building

D1V3 Ramp gradient, crossfall, surface profile and slip resistance for ramps used by wheelchairs

D1V4 Fire Safety Verification Method

Part D2 Provision for escape

Deemed-to-Satisfy Provisions

D2D1 Deemed-to-Satisfy Provisions

D2D2 Application of Part

D2D3 Number of exits required

D2D4 When fire-isolated stairways and ramps are required

D2D5 Exit travel distances

D2D6 Distance between alternative exits

D2D7 Height of exits, paths of travel to exits and doorways

D2D8 Width of exits and paths of travel to exits

D2D9 Width of doorways in exits or paths of travel to exits

D2D10 Exit width not to diminish in direction of travel

D2D11 Determination and measurement of exits and paths of travel to exits

D2D12 Travel via fire-isolated exits

D2D13 External stairways or ramps in lieu of fire-isolated exits

D2D14 Travel by non-fire-isolated stairways or ramps

D2D15 Discharge from exits

D2D16 Horizontal exits

D2D17 Non-required stairways, ramps or escalators

	D2D18	Number of persons accommodated
	D2D19	Measurement of distances
	D2D20	Method of measurement
	D2D21	Plant rooms, lift machine rooms and electricity network substations: Concession
	D2D22	Access to lift pits
	D2D23	Egress from primary schools
Part D3	**Construction of exits**	
	Deemed-to-Satisfy Provisions	
	D3D1	Deemed-to-Satisfy Provisions
	D3D2	Application of Part
	D3D3	Fire-isolated stairways and ramps
	D3D4	Non-fire-isolated stairways and ramps
	D3D5	Separation of rising and descending stair flights
	D3D6	Open access ramps and balconies
	D3D7	Smoke lobbies
	D3D8	Installations in exits and paths of travel
	D3D9	Enclosure of space under stairs and ramps
	D3D10	Width of required stairways and ramps
	D3D11	Pedestrian ramps
	D3D12	Fire-isolated passageways
	D3D13	Roof as open space
	D3D14	Goings and risers
	D3D15	Landings
	D3D16	Thresholds
	D3D17	Barriers to prevent falls
	D3D18	Height of barriers
	D3D19	Openings in barriers
	D3D20	Barrier climbability
	D3D21	Wire barriers
	D3D22	Handrails
	D3D23	Fixed platforms, walkways, stairways and ladders
	D3D24	Doorways and doors
	D3D25	Swinging doors
	D3D26	Operation of latch
	D3D27	Re-entry from fire-isolated exits
	D3D28	Signs on doors
	D3D29	Protection of openable windows
	D3D30	Timber stairways: Concession
Part D4	**Access for people with a disability**	
	Deemed-to-Satisfy Provisions	
	D4D1	Deemed-to-Satisfy Provisions
	D4D2	General building access requirements
	D4D3	Access to buildings
	D4D4	Parts of buildings to be accessible

	D4D5	Exemptions
	D4D6	Accessible carparking
	D4D7	Signage
	D4D8	Hearing augmentation
	D4D9	Tactile indicators
	D4D10	Wheelchair seating spaces in Class 9b assembly buildings
	D4D11	Swimming pools
	D4D12	Ramps
	D4D13	Glazing on an accessway
Specification 14	**Non-required stairways, ramps and escalators**	
	S14C1	Scope
	S14C2	Requirements
Specification 15	**Braille and tactile signs**	
	S15C1	Scope
	S15C2	Location of braille and tactile signs
	S15C3	Braille and tactile sign specification
	S15C4	Luminance contrast
	S15C5	Lighting
	S15C6	Braille
Specification 16	**Accessible water entry/exit from swimming pools**	
	S16C1	Scope
	S16C2	Fixed or moveable ramp
	S16C3	Zero depth entry
	S16C4	Platform swimming pool lift
	S16C5	Sling-style swimming pool lift
	S16C6	Aquatic wheelchair

Part D1 Access and egress

Introduction to this Part

This Part focuses on specifying the number and location of *exits*, construction of *exits* to enable safe evacuation and providing access to and within buildings for people with disability. It also includes measures intended to reduce slips, trips and falls.

Objectives

D1O1 Objective

[2019: DO1]

The Objective of this Section is to—

(a) provide, as far as is reasonable, people with safe, equitable and dignified access to—

(i) a building; and

(ii) the services and facilities within a building; and

(b) safeguard occupants from illness or injury while evacuating in an emergency.

Functional Statements

D1F1 Access

[2019: DF1]

A building is to provide, as far as is reasonable—

(a) safe; and

(b) equitable and dignified,

access for people to the services and facilities within.

Limitations

D1F1(b) does not apply to a Class 4 part of a building.

D1F2 Egress

[2019: DF2]

A building is to be provided with means of evacuation which allow occupants time to evacuate safely without being overcome by the effects of an emergency.

Limitations

D1F2 does not apply to the internal parts of a *sole-occupancy unit* in a Class 2 or 3 building or Class 4 part of a building.

Performance Requirements

D1P1 Access for people with a disability

[2019: DP1]

Access must be provided, to the degree necessary, to enable—

(a) people to—

(i) approach the building from the road boundary and from any *accessible* carparking spaces associated with the building; and

(ii) approach the building from any *accessible* associated building; and

(iii) access work and public spaces, accommodation and facilities for personal hygiene; and

(b) identification of *accessways* at appropriate locations which are easy to find.

Limitations

D1P1 does not apply to a Class 4 part of a building.

D1P2 Safe movement to and within a building

[2019: DP2]

So that people can move safely to and within a building, it must have—

(a) walking surfaces with safe gradients; and

(b) any doors installed to avoid the risk of occupants—

(i) having their egress impeded; or

(ii) being trapped in the building; and

(c) any stairways and ramps with—

(i) slip-resistant walking surfaces on—

(A) ramps; and

(B) stairway treads or near the edge of the nosing; and

(ii) suitable handrails where necessary to assist and provide stability to people using the stairway or ramp; and

(iii) suitable landings to avoid undue fatigue; and

(iv) landings where a door opens from or onto the stairway or ramp so that the door does not create an obstruction; and

(v) in the case of a stairway, suitable safe passage in relation to the nature, volume and frequency of likely usage.

D1P3 Fall prevention barriers

[2019: DP3]

(1) A barrier must be provided where people could fall—

(a) 1 m or more—

(i) from a floor or roof or through an opening (other than through an openable window) in the *external wall* of a building; or

(ii) due to a sudden change of level within or associated with a building; or

(b) 2 m or more from a floor through an openable window—

(i) in a bedroom in a Class 2 or 3 building or a Class 4 part of a building; or

(ii) in a Class 9b *early childhood centre*; or

(c) 4 m or more from a floor through an openable window not covered by (b).

(2) A barrier *required* by (1) must be—

(a) continuous and extend for the full extent of the hazard; and

(b) of a height to protect people from accidentally falling from the floor or roof or through the opening or openable window; and

(c) constructed to prevent people from falling through the barrier; and

(d) capable of restricting the passage of children; and

(e) of strength and rigidity to withstand—

(i) the foreseeable impact of people; and

(ii) where appropriate, the static pressure of people pressing against it.

Limitations

(1) D1P3 does not apply where such barrier would be incompatible with the intended use of an area such as a stage, loading dock or the like.

(2) D1P3(2)(d) does not apply to—

(a) *fire-isolated stairways*, *fire-isolated ramps*, and other areas used primarily for emergency purposes, excluding external stairways and ramps; and

(b) Class 7 (other than *carparks*) and Class 8 buildings and parts of buildings containing those classifications.

D1P4 Exits

[2019: DP4]

Exits must be provided from a building to allow occupants to evacuate safely, with their number, location and dimensions being appropriate to—

(a) the travel distance; and

(b) the number, mobility and other characteristics of occupants; and

(c) the function or use of the building; and

(d) the height of the building; and

(e) whether the *exit* is from above or below ground level.

D1P5 Fire-isolated exits

[2019: DP5]

To protect evacuating occupants from a fire in the building *exits* must be fire-isolated, to the degree necessary, appropriate to—

(a) the number of storeys connected by the *exits*; and

(b) the *fire safety system* installed in the building; and

(c) the function or use of the building; and

(d) the number of *storeys* passed through by the *exits*; and

(e) *fire brigade* intervention.

D1P6 Paths of travel to exits

[2019: DP6]

So that occupants can safely evacuate the building, paths of travel to *exits* must have dimensions appropriate to—

(a) the number, mobility and other characteristics of occupants; and

(b) the function or use of the building.

Limitations

D1P6 does not apply to the internal parts of a *sole-occupancy unit* in a Class 2 or 3 building or Class 4 part of a building.

D1P7 Evacuation lifts

[2019: DP7]

Where a lift is intended to be used in addition to the *required exits* to assist occupants to evacuate a building safely, the type, number, location and fire-isolation must be appropriate to—

(a) the travel distance to the lift; and

(b) the number, mobility and other characteristics of occupants; and

(c) the function or use of the building; and

(d) the number of *storeys* connected by the lift; and

(e) the *fire safety system* installed in the building; and

(f) the waiting time, travel time and capacity of the lift; and

(g) the reliability and availability of the lift; and

(h) the emergency procedures for the building.

D1P8 Carparking for people with a disability

[2019: DP8]

Carparking spaces for use by people with a disability must be—

(a) provided, to the degree necessary, to give equitable access for carparking; and

(b) designated and easy to find.

Limitations

D1P8 does not apply to a building where—

(a) a parking service is provided; and

(b) direct access to any carparking spaces by the general public or occupants is not available.

D1P9 Communication systems for people with hearing impairment

[2019: DP9]

An inbuilt communication system for entry, information, entertainment, or for the provision of a service, must be suitable for occupants who are deaf or hearing impaired.

Limitations

D1P9 does not apply to—

(a) a Class 4 part of a building; or

(b) an inbuilt communication system used only for emergency warning purposes.

TAS D1P10

Verification Methods

D1V1 Wire barriers

[2019: DV1]

Compliance with D1P3(2)(c) and (d) for wire barriers is verified when the wire barrier passes the test described below:

(a) Application — the test must be carried out on either—

(i) a prototype of a wire barrier that is identical to that proposed to be installed on-site; or

(ii) a wire barrier installed on-site.

(b) Test equipment — the test equipment must consist of the following:

(i) A horizontally suspended 125 mm diameter, 405 mm long cylinder of 1 mm thick steel having a highly polished 105 mm long cone at one end with a 20 mm diameter flat leading edge to which an eye bolt is fixed.

(ii) A sufficiently flexible horizontal cable with mechanisms capable of applying and measuring a tension of 150 N (or a 15.3 kg weight suspended over a low friction pulley) is to be attached to the eye bolt (see Figure D1V1).

(iii) A mechanism capable of measuring the tension force applied to each wire.

(c) Test procedure — the test procedure must be as follows:

(i) Tension the wires, within their safe load, to the same tension in all wires and measure the tensions with a strain indicator.

(ii) For—

(A) horizontal or near horizontal wires, position the cone against a pair of wires at the mid-span between supports, then apply the 150 N tension force to the cone; and

(B) vertical wires, position the cone against a pair of wires at the mid-span between supporting rails, then apply the 150 N tension force to the cone; and

(C) near-vertical wires, position the cone against a pair of wires at the widest opening between the wires, then apply the 150 N tension force to the cone.

(iii) Attempt to pull the cone through the gap between the wires under the 150 N load, and—

(A) increase the tension in the wires and repeat (ii) until such time as the cone will not pull through; or

(B) if it does not pull through, reduce the tension in the wires and repeat step (ii); and

(iv) When the cone is just prevented from pulling through the gap, the wires are at the correct tension in which case the cone is withdrawn and the tension recorded.

(v) Reduce the tension in the wires and repeat steps (ii) to (iv) twice more, recording the tension in each case after the cone has been removed and then calculate the average of the three tensions as the *required* tension for each wire.

(vi) For prototype tests of horizontal or near horizontal wires, record the deflection of each wire at the average tension calculated in accordance with (v) when a 2 kg mass is hung at mid-span between supports.

(d) Test report — the test report must include the following information:

(i) The name and address of the person supervising the test.

(ii) The test report number.

(iii) The date of the test.

(iv) The wire manufacturer's name and address, and specifications of the wires used in the test including the safe load limit of the wires.

(v) The construction details of the test specimen, including a description and drawings and details of the components including supports, post or railing spacings and wire spacings.

(vi) For a prototype test, the *required* tension calculated in accordance with (c)(v).

(vii) For prototype tests of horizontal or near horizontal wires, the deflection measured in accordance with (c)(vi).

Figure D1V1: Apparatus for testing wire barriers

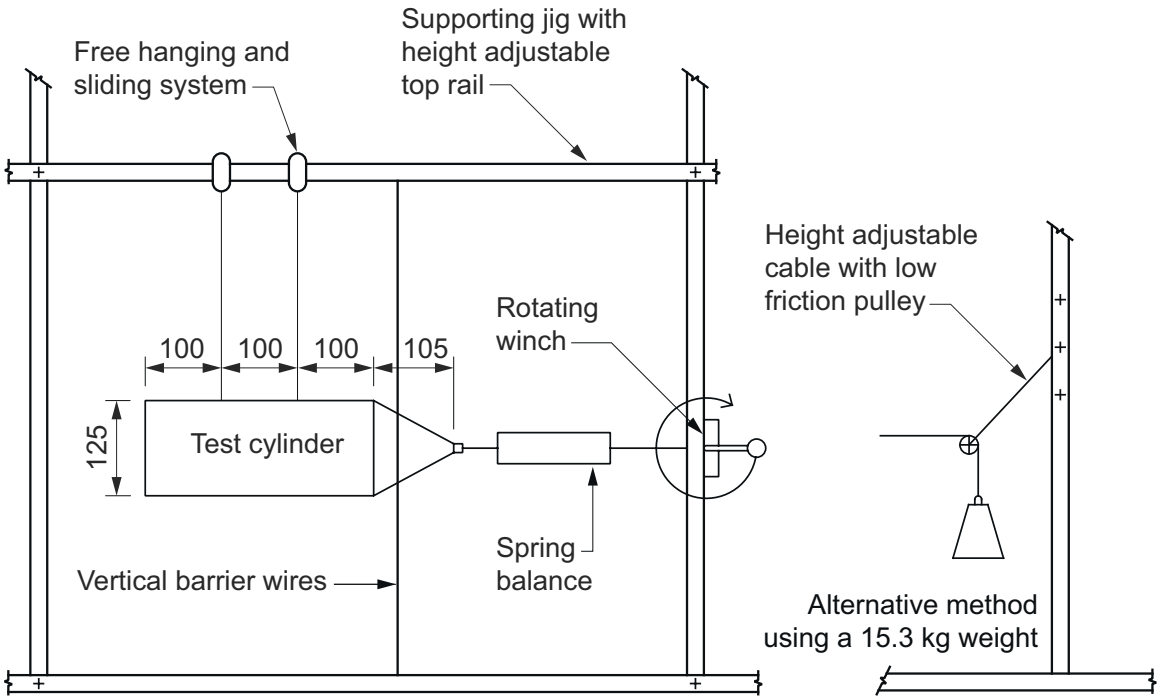

D1V2 Access to and within a building

[2019: DV2]

Compliance with D1P1, D1P2, D1P6, E3P4 and/or F4P1, for access, is verified when it is determined that the proposed building provides an equivalent level of access as a reference building when using the following process:

(a) A *performance-based design brief* is completed to define the following:

(i) The occupant profile and *characteristics* based on the type and use of the building.

(ii) The appropriate method for determining the level of access.

(iii) The appropriate modelling method and tool.

(iv) The measurable acceptance criteria.

(b) Using the appropriate method, the level of access *required* is determined by first modelling a reference building using the relevant *Deemed-to-Satisfy Provisions* of Sections D, E and F and the occupant profile and *characteristics* to determine the—

(i) needs of the occupants that the reference building addresses; and

(ii) facilities *required* to be accessed by each occupant profile; and

(iii) baseline measurable acceptance criteria.

(c) The proposed building and access solution must be modelled using a modelling method and approach consistent with that used for the reference building, and the same critical features including the following:

(i) Occupant profile and *characteristics*.

(ii) Building location and orientation.

(iii) Locations of all entrances and *exits*.

(iv) Locations of facilities important to the solution, including sanitary facilities, lifts, stairwells, etc.

(v) The number and range of facilities.

(d) The proposed solution's level of access is assessed by modelling occupant performance using *characteristics*, whereby the proposed building provides for equivalent access appropriate to the needs of each occupant profile.

D1V3 Ramp gradient, crossfall, surface profile and slip resistance for ramps used by wheelchairs

[2019: DV3]

(1) Compliance with *Performance Requirement* D1P2, relating to gradient, crossfall, surface profile and slip resistance of a ramp for the use of wheelchairs is verified when—

(a) the ramp has a gradient that is not steeper than 1:8; and

(b) the pushing force required to accelerate a wheelchair and user during ascent is in accordance with (2); and

(c) the required braking force for a wheelchair and user during descent is in accordance with (3); and

(d) the projected ascent time is in accordance with (4); and

(e) the ramp crossfall, surface profile and slip resistance is in accordance with (5).

(2) The pushing force during ascent must be in accordance with the formula: $F_p > mg\sin\alpha + C_{\pi1}N_1 + C_{\pi2}N_2$

where—

F_p = the maximum force during ascent, equal to 40 N for ramps required to be usable by the general public; and

m = the design mass of the wheelchair and wheelchair user, equal to 127 kg for ramps required to be usable by the general public; and

g = the gravitational constant, equal to 9.8 m/s^2; and

α = the angle of incline of the ramp; and

$C_{\pi1}, C_{\pi2}$ = the coefficient of rolling resistance between the wheelchair wheel and the ramp surface, for the rear wheels and front wheels respectively; and

N_1, N_2 = the normal force between the wheelchair wheels and ramp surface, for rear wheels and front wheels respectively.

(3) The braking force during descent must be less than 9 N when calculated in accordance with the formula: $F_b = mg\sin\alpha - C_{\pi1}N_1 - C_{\pi2}N_2$

where—

F_b = the braking force during descent; and

m = the design mass of the wheelchair and wheelchair user, equal to 127 kg for ramps required to be usable by the general public; and

g = the gravitational constant, equal to 9.8 m/s^2; and

α = the angle of incline of the ramp; and

$C_{\pi1}, C_{\pi2}$ = the coefficient of rolling resistance between the wheelchair wheel and ramp surface, for the rear wheels and front wheels respectively; and

N_1, N_2 = the normal force between the wheelchair wheels and ramp surface, for the rear wheels and front wheels respectively.

(4) The time taken to ascend the ramp must be less than 17 s when calculated in accordance with the formula:

$$T = \frac{Lm}{t\,(F_p - mg\sin\alpha - C_{\pi1}N_1 - C_{\pi2}N_2)}$$

where—

T = the time taken to ascend the ramp in seconds; and

L = the length of the ramp in metres; and

m = the design mass of the wheelchair and wheelchair user, equal to 127 kg for ramps required to be useable by the general public; and

t = the time taken for the wheelchair to achieve maximum velocity, equal to 0.8 m/s; and

F_p = the maximum pushing force during ascent, equal to 40 N for ramps required to be usable by the general public; and

g = the gravitational constant, equal to 9.8 m/s^2; and

α = the angle of incline of the ramp; and

$C_{\pi 1}, C_{\pi 2}$ = the coefficient of rolling resistance between the wheelchair wheel and ramp surface, for the rear wheels and front wheels respectively; and

N_1, N_2 = the normal force between wheelchair wheels and ramp surface, for the rear wheels and front wheels respectively.

(5) The crossfall must be no steeper than, the surface profile must be no rougher than, and the slip resistance must be no less than, the values nominated in Table D1V3 for the gradient of the ramp.

Table D1V3: Ramp crossfall, surface profile and slip resistance

Gradient	Crossfall	Surface profile (mm)	Slip resistance
1:14	1:40	2	P4/R11
1:12	1:50	2	P5/R12
1:10	1:100	1	P5/R12
1:8	1:100	0.5	P5/R12

D1V4 Fire Safety Verification Method

[2019: DV4]

Compliance with D1P4, D1P5, D1P6 and D1P7 is verified when a building is designed in accordance with C1V4.

Part D2 Provision for escape

Introduction to this Part

This Part contains *Deemed-to-Satisfy Provisions* for Part D1. It sets out required numbers, dimensions and placement of *exits*, rules for measuring building occupancy and travel distance to *exits*, places *exits* lead to and the use of *horizontal exits* within a building.

Deemed-to-Satisfy Provisions

D2D1 Deemed-to-Satisfy Provisions

[2019: D1.0]

(1) Where a *Deemed-to-Satisfy Solution* is proposed, *Performance Requirements* D1P1 to D1P6, D1P8 and D1P9 are satisfied by complying with—

(a) D2D2 to D2D23, D3D2 to D3D30 and D4D2 to D4D13; and

(b) in a building containing an *atrium*, Part G3; and

(c) in a building in an *alpine area*, Part G4; and

(d) for a building containing an *occupiable outdoor area*, Part G6; and

(e) for additional requirements for Class 9b buildings, Part I1; and

(f) for public transport buildings, Part I2; and

(g) for *farm sheds*, Part I3.

(2) Where a *Performance Solution* is proposed, the relevant *Performance Requirements* must be determined in accordance with A2G2(3) and A2G4(3) as applicable.

(3) *Performance Requirement* D1P7 must be complied with if lifts are to be used to assist occupants to evacuate a building.

Notes

There are no *Deemed-to-Satisfy Provisions* for D1P7 in respect of using lifts to assist occupants to evacuate a building.

D2D2 Application of Part

[2019: D1.1]

The *Deemed-to-Satisfy Provisions* of this Part do not apply to the internal parts of a *sole-occupancy unit* in a Class 2 or 3 building or a Class 4 part of a building.

D2D3 Number of exits required

[2019: D1.2]

(1) All buildings — Every building must have at least one *exit* from each *storey*.

SA D2D3(2)

(2) Class 2 to 8 buildings —

(a) In addition to any *horizontal exit*, not less than 2 *exits* must be provided from the following:

(i) Each *storey* if the building has an *effective height* of more than 25 m.

(ii) A Class 2 or 3 building subject to C2D6.

(b) The requirements of (a)(i) do not apply to a part of a *storey* that—

(i) is provided with direct egress to a road or *open space*; and

(ii) satisfies D2D5 by the provision of 1 *exit*.

(3) Basements — In addition to any *horizontal exit*, not less than 2 *exits* must be provided from any *storey* if egress from that *storey* involves a vertical rise within the building of more than 1.5 m, unless—

(a) the *floor area* of the *storey* is not more than 50 m²; and

(b) the distance of travel from any point on the floor to a single *exit* is not more than 20 m.

NSW D2D3(4)

(4) Class 9 buildings —

(a) In addition to any *horizontal exit*, not less than 2 *exits* must be provided from the following:

(i) Each *storey* if the building has a *rise in storeys* of more than 6 or an *effective height* of more than 25 m.

(ii) Any *storey* which includes a *patient care area* in a Class 9a *health-care building*.

(iii) Any *storey* that contains sleeping areas in a Class 9c building.

(iv) Any *storey* used as a Class 9b *early childhood centre*, or any Class 9b *early childhood centre* which forms part of a *storey*.

(v) Each *storey* in a primary or secondary *school* with a *rise in storeys* of 2 or more.

(vi) Any *storey* or *mezzanine* that accommodates more than 50 persons, calculated under D2D18.

(b) The requirements of (a) do not apply to a part of a *storey* that—

(i) is a plant room, machinery room, storeroom, lift-machine room or the like; and

(ii) is provided with direct egress to a road, *open space* or a fire-isolated *exit* complying with D2D12(2); and

(iii) satisfies D2D5 by the provision of 1 *exit*.

(5) *Exits* from Class 9c buildings and *patient care areas* in Class 9a *health-care buildings* — In a Class 9a *health-care building* and a Class 9c building, at least one *exit* must be provided from every part of a *storey* which has been divided into *fire compartments* in accordance with C3D3 or C3D6.

(6) Exits in open spectator stands — In an *open spectator stand* containing more than one tier of seating, every tier must have not less than 2 stairways or ramps, each forming part of the path of travel to not less than 2 *exits*.

(7) Access to exits — Without passing through another *sole-occupancy unit* every occupant of a *storey* or part of a *storey* must have access to—

(a) an *exit*; or

(b) at least 2 *exits* if 2 or more *exits* are *required*.

D2D4 When fire-isolated stairways and ramps are required

[2019: D1.3]

(1) Class 2 and 3 buildings — The following applies:

(a) Subject to (b), every stairway or ramp serving as a *required exit* must be fire-isolated unless it connects, passes through or passes by not more than—

(i) 3 consecutive *storeys* in a Class 2 building; or

(ii) 2 consecutive *storeys* in a Class 3 building.

(b) Notwithstanding (a), one extra *storey* of any classification may be included if—

(i) it is only for the accommodation of motor vehicles or for other ancillary purposes; or

(ii) the building has a sprinkler system (other than a FPAA101D system) complying with Specification 17 installed throughout; or

(iii) the *required exit* does not provide access to or egress for, and is separated from, the extra *storey* by construction having—

(A) an FRL of –/60/60, if non-*loadbearing*; and

(B) an FRL of 90/90/90, if *loadbearing*; and

(C) no opening that could permit the passage of fire or smoke.

SA D2D4(2)

(2) Class 5, 6, 7, 8 or 9 buildings — Every stairway or ramp serving as a *required exit* must be fire-isolated unless—

(a) in a Class 9a *health-care building* — it connects, or passes through or passes by not more than 2 consecutive *storeys* in areas other than *patient care areas*; or

(b) it is part of an *open spectator stand*; or

(c) in any other case, except in a Class 9b *early childhood centre* or a Class 9c building, it connects, passes through or passes by not more than 2 consecutive *storeys* and one extra *storey* of any classification may be included if—

(i) the building has a sprinkler system (other than a FPAA101D system) complying with Specification 17 installed throughout; or

(ii) the *required exit* does not provide access to or egress for, and is separated from, the extra *storey* by construction having—

(A) an FRL of –/60/60, if non-*loadbearing*; and

(B) an FRL of 90/90/90 for Type A construction or 60/60/60 for Type B or C construction, if *loadbearing*; and

(C) no opening that could permit the passage of fire or smoke.

Exemptions

D2D4(2) does not apply to—

(a) a Class 9b *early childhood centre* wholly within a *storey* that provides direct egress to a road or *open space*; or

(b) a Class 9b *early childhood centre* with a *rise in storeys* of not more than 2, where the Class 9b *early childhood centre* is the only use in that building.

D2D5 Exit travel distances

[2019: D1.4]

(1) Class 2 and 3 buildings —

(a) The entrance doorway of any *sole-occupancy unit* must be not more than—

(i) 6 m from an *exit* or from a point from which travel in different directions to 2 *exits* is available; or

(ii) 20 m from a single *exit* serving the *storey* at the level of egress to a road or *open space*; and

(b) no point on the floor of a room which is not in a *sole-occupancy unit* must be more than 20 m from an *exit* or from a point at which travel in different directions to 2 *exits* is available.

(2) Class 4 parts of a building — The entrance doorway to any Class 4 part of a building must be not more than 6 m from an *exit* or a point from which travel in different directions to 2 *exits* is available.

(3) Class 5, 6, 7, 8 or 9 buildings — Subject to (4), (5) and (6)—

(a) no point on a floor must be more than 20 m from an *exit*, or a point from which travel in different directions to 2 *exits* is available, in which case the maximum distance to one of those *exits* must not exceed 40 m; and

(b) in a Class 5 or 6 building, the distance to a single *exit* serving a *storey* at the level of access to a road or *open space* may be increased to 30 m.

VIC D2D5(4)

(4) Class 9a buildings — In a *patient care area* in a Class 9a building—

(a) no point on the floor must be more than 12 m from a point from which travel in different directions to 2 of the *required exits* is available; and

(b) the maximum distance to one of those *exits* must not be more than 30 m from the starting point.

(5) Open spectator stands — The distance of travel to an *exit* in a Class 9b building used as an *open spectator stand*

must be not more than 60 m.

(6) Assembly buildings — In a Class 9b building other than a *school* or *early childhood centre*, the distance to one of the *exits* may be 60 m if—

(a) the path of travel from the room concerned to that *exit* is through another area which is a corridor, hallway, lobby, ramp or other circulation space; and

(b) the room is smoke-separated from the circulation space by construction having an FRL of not less than 60/60/60 with every doorway in that construction protected by a tight fitting, *self-closing*, solid-core door not less than 35 mm thick; and

(c) the maximum distance of travel does not exceed 40 m within the room and 20 m from the doorway to the room through the circulation space to the *exit*.

SA D2D5(7)

SA D2D5(8)

SA D2D6

D2D6 Distance between alternative exits

[2019: D1.5]

Exits that are *required* as alternative means of egress must be—

(a) distributed as uniformly as practicable within or around the *storey* served and in positions where unobstructed access to at least 2 *exits* is readily available from all points on the floor including lift lobby areas; and

(b) not less than 9 m apart; and

(c) not more than—

(i) in a Class 2 or 3 building — 45 m apart; or

(ii) in a Class 9a *health-care building*, if such *required exit* serves a *patient care area* — 45 m apart; or

(iii) in all other cases — 60 m apart; and

(d) located so that alternative paths of travel do not converge such that they become less than 6 m apart.

D2D7 Height of exits, paths of travel to exits and doorways

[2019: D1.6(a)]

In a *required exit* or path of travel to an *exit* the unobstructed height throughout must be not less than 2 m, except the unobstructed height of any doorway may be reduced to not less than 1980 mm.

D2D8 Width of exits and paths of travel to exits

[2019: D1.6(b), (c), (d) and (e)]

(1) The unobstructed width of each *required exit* or path of travel to an *exit*, except for ladders provided in accordance with D2D21, D3D23 or I3D5, and doorways, must be not less than—

(a) 1 m; or

(b) 1.8 m in a passageway, corridor or ramp normally used for the transportation of patients in beds within a *treatment area* or *ward area*; and

(c) in a *public corridor* in a Class 9c *aged care building*, notwithstanding (2) and (3)—

(i) 1.5 m; and

(ii) 1.8 m for the full width of the doorway, providing access into a *sole-occupancy unit* or communal bathroom.

(2) If the *storey*, *mezzanine* or *open spectator stand* accommodates more than 100 persons but not more than 200 persons, the aggregate unobstructed width of *required exits* or paths of travel to an *exit*, except for doorways, must be not less than—

(a) 1 m plus 250 mm for each 25 persons (or part) in excess of 100; or

(b) 1.8 m in a passageway, corridor or ramp normally used for the transportation of patients in beds within a *treatment area* or *ward area*.

(3) If the *storey*, *mezzanine* or *open spectator stand* accommodates more than 200 persons, the aggregate unobstructed width of *required exits* or paths of travel to an *exit*, except for doorways, must be not less than—

(a) 2 m plus 500 mm for every 60 persons (or part) in excess of 200 persons if egress involves a change in floor level by a stairway or ramp with a gradient steeper than 1 in 12; or

(b) in any other case, 2 m plus 500 mm for every 75 persons (or part) in excess of 200.

(4) In an *open spectator stand* which accommodates more than 2000 persons, the aggregate unobstructed width of *required exits* or paths of travel to an *exit*, except for doorways, must be not less than 17 m plus a width (in metres) equal to the number in excess of 2000 divided by 600.

NSW D2D8(5)

NSW D2D9

VIC D2D9

D2D9 Width of doorways in exits or paths of travel to exits

[2019: D1.6(f)]

In a *required exit* or path of travel to an *exit*, the unobstructed width of a doorway must be not less than—

(a) in *patient care areas* through which patients would normally be transported in beds—

(i) if the doorway provides access to, or from, a corridor of width—

(A) less than 2.2 m — 1200 mm; or

(B) 2.2 m or greater — 1070 mm; and

(ii) where the doorway referred to in (i) is fitted with two leaves and one leaf is secured in the closed position in accordance with D3D26(3)(e), the other leaf must permit an unobstructed opening not less than 800 mm wide; or

(b) in *patient care areas* in a *horizontal exit* — 1250 mm; or

(c) the unobstructed width of each *exit* provided to comply with D2D8, minus 250 mm; or

(d) in a Class 9c building, 800 mm, except—

(i) in *resident use areas* the minimum unobstructed width must be 870 mm; and

(ii) for doorways leading from a *public corridor* to a *sole-occupancy unit* the minimum unobstructed width must be 1070 mm; and

(iii) where the doorway is fitted with two leaves and one leaf is secured in the closed position in accordance with D3D26(3)(e), the other leaf must permit an unobstructed opening not less than 870 mm wide in *resident use areas* and 800 mm wide in non-*resident use area*; or

(e) in any other case except where it opens to a *sanitary compartment* or bathroom — 750 mm wide.

D2D10 Exit width not to diminish in direction of travel

[2019: D1.6(g)]

The unobstructed width of a *required exit* must not diminish in the direction of travel to a road or *open space*, except where the width is increased in accordance with D2D8(1)(b) or D2D9(a)(i).

D2D11 Determination and measurement of exits and paths of travel to exits

[2019: D1.6(h) and (i)]

For the purposes of D2D7 to D2D10 the following apply:

(a) The *required* width of a stairway or ramp in a *required exit* or path of travel to an *exit* must—

(i) be measured clear of all obstructions such as handrails, projecting parts of barriers and the like; and

(ii) extend without interruption, except for ceiling cornices, to a height not less than 2 m vertically above a line along the nosings of the treads or the floor surface of the ramp or landing.

(b) To determine the aggregate unobstructed width, the number of persons accommodated must be calculated according to D2D18.

D2D12 Travel via fire-isolated exits

[2019: D1.7]

(1) A doorway from a room must not open directly into a stairway, passageway or ramp that is *required* to be fire-isolated unless it is from—

(a) a *public corridor*, public lobby or the like; or

(b) a *sole-occupancy unit* occupying all of a *storey*; or

(c) a *sanitary compartment*, airlock or the like.

(2) Each *fire-isolated stairway* or *fire-isolated ramp* must provide independent egress from each *storey* served and discharge directly, or by way of its own *fire-isolated passageway*—

(a) to a road or *open space*; or

(b) to a point—

(i) in a *storey* or space, within the confines of the building, that is used only for pedestrian movement, car parking or the like and is open for at least ⅔ of its perimeter; and

(ii) from which an unimpeded path of travel, not further than 20 m, is available to a road or *open space*; or

(c) into a covered area that—

(i) adjoins a road or *open space*; and

(ii) is open for at least ⅓ of its perimeter; and

(iii) has an unobstructed clear height throughout, including the perimeter openings, of not less than 3 m; and

(iv) provides an unimpeded path of travel from the point of discharge to the road or *open space* of not more than 6 m.

(3) Where a path of travel from the point of discharge of a fire-isolated *exit* necessitates passing within 6 m of any part of an *external wall* of the same building, measured horizontally at right angles to the path of travel, the following applies:

(a) That part of the wall must have—

(i) an FRL of not less than 60/60/60; and

(ii) any openings protected internally in accordance with C4D5; and

(b) The protection *required* by (a) must extend for a distance of 3 m above or below, as appropriate, the level of the path of travel, or for the height of the wall, whichever is the lesser.

(4) If more than 2 access doorways, not from a *sanitary compartment* or the like, open to a *required* fire-isolated *exit* in the same *storey*—

(a) a smoke lobby in accordance with D3D7 must be provided; or

(b) the *exit* must be pressurised in accordance with AS 1668.1.

(5) A ramp must be provided at any change in level less than 600 mm in a *fire-isolated passageway* in a Class 9 building.

D2D13 External stairways or ramps in lieu of fire-isolated exits

[2019: D1.8]

(1) An external stairway or ramp may serve as a *required exit* in lieu of a fire-isolated *exit* serving a *storey* below an *effective height* of 25 m, if the stairway or ramp is—

(a) *non-combustible* throughout; and

(b) protected in accordance with (3) if it is within 6 m of, and exposed to, any part of the *external wall* of the building it serves.

(2) For the purposes of this clause—

(a) exposure under (1)(b), is measured in accordance with S5C2, as if the *exit* was a building element and the *external wall* of the building was a *fire-source feature* to the *exit*, except that the FRL *required* in S5C2(1)(a) must not be less than 60/60/60; and

(b) the plane formed at the construction edge or perimeter of an unenclosed building or part such as an *open-deck carpark*, *open spectator stand* or the like, is deemed to be an *external wall*; and

(c) openings in an *external wall* and openings under (3) and (4), are determined in accordance with C4D2.

(3) The protection referred to in (1)(b), must adequately protect occupants using the *exit* from exposure to a fire within the building, in accordance with one of the following methods:

(a) The part of the *external wall* of the building to which the *exit* is exposed must have—

(i) an FRL of not less than 60/60/60; and

(ii) no openings less than 3 m from the *exit* (except a doorway serving the *exit* protected by a –/60/30 fire door in accordance with C4D9(1)); and

(iii) any opening 3 m or more but less than 6 m from the *exit*, protected in accordance with C4D5 and if wall wetting sprinklers are used, they are located internally.

(b) The *exit* must be protected by construction of a wall, roof, floor or other shielding element as appropriate in accordance with (4) from—

(i) any part of the *external wall* of the building having an FRL of less than 60/60/60; and

(ii) any openings in the *external wall*.

(4) The wall, roof, floor or other shielding element *required* by (3)(b) must—

(a) have an FRL of not less than 60/60/60; and

(b) have no openings less than 3 m from the *external wall* of the building (except a doorway serving the *exit* protected by a –/60/30 fire door in accordance with C4D9(1)); and

(c) have any opening 3 m or more but less than 6 m from any part of the *external wall* of the building protected in accordance with C4D5 and if wall wetting sprinklers are used, they are located on the side exposed to the *external wall*.

D2D14 Travel by non-fire-isolated stairways or ramps

[2019: D1.9]

(1) A non-*fire-isolated stairway* or non-*fire-isolated ramp* serving as a *required exit* must provide a continuous means of travel by its own *flights* and landings from every *storey* served to the level at which egress to a road or *open space* is provided.

(2) In a Class 2, 3 or 4 building, the distance between the doorway of a room or *sole-occupancy unit* and the point of egress to a road or *open space* by way of a stairway or ramp that is not fire-isolated and is *required* to serve that room or *sole-occupancy unit* must not exceed—

(a) 30 m in a building of Type C construction; or

(b) 60 m in all other cases.

(3) In a Class 5, 6, 7, 8 or 9 building, the distance from any point on a floor to a point of egress to a road or *open space* by way of a *required* non-*fire-isolated stairway* or non-*fire-isolated ramp* must not exceed 80 m.

(4) In a Class 2, 3 or 9a building, a *required* non-*fire-isolated stairway* or non-*fire-isolated ramp* must discharge at a point not more than—

(a) 15 m from a doorway providing egress to a road or *open space* or from a *fire-isolated passageway* leading to a road or *open space*; or

(b) 30 m from one of 2 such doorways or passageways if travel to each of them from the non-*fire-isolated stairway* or non-*fire-isolated ramp* is in opposite or approximately opposite directions.

(5) In a Class 5 to 8 or 9b building, a *required* non-*fire-isolated stairway* or non-*fire-isolated ramp* must discharge at a point not more than—

(a) 20 m from a doorway providing egress to a road or *open space* or from a *fire-isolated passageway* leading to a road or *open space*; or

(b) 40 m from one of 2 such doorways or passageways if travel to each of them from the non-*fire-isolated stairway* or non-*fire-isolated ramp* is in opposite or approximately opposite directions.

(6) In a Class 2 or 3 building, if 2 or more *exits* are *required* and are provided by means of internal non-*fire-isolated stairways* or non-*fire-isolated ramps* each *exit* must—

(a) provide separate egress to a road or *open space*; and

(b) be suitably smoke-separated from each other at the level of discharge.

SA D2D14(7)

D2D15 Discharge from exits

[2019: D1.10]

(1) An *exit* must not be blocked at the point of discharge and where necessary, suitable barriers must be provided to prevent vehicles from blocking the *exit*, or access to it.

(2) If a *required exit* leads to an *open space*, the path of travel to the road must have an unobstructed width throughout of not less than—

(a) the minimum width of the *required exit*; or

(b) 1 m,

whichever is the greater.

(3) If an *exit* discharges to *open space* that is at a different level than the public road to which it is connected, the path of travel to the road must be by—

(a) a ramp or other incline having a gradient not steeper than 1:8 at any part, or not steeper than 1:14 if *required* by the *Deemed-to-Satisfy Provisions* of Part D4; or

(b) except if the *exit* is from a Class 9a building, a stairway complying with the *Deemed-to-Satisfy Provisions* of the NCC.

(4) The discharge point of alternative *exits* must be located as far apart as practical.

(5) In a Class 9b building which is an *open spectator stand* that accommodates more than 500 persons, a *required* stairway or *required* ramp must not discharge to the ground in front of the stand.

NSW D2D15(6)

(6) In a Class 9b building containing an auditorium which accommodates more than 500 persons, not more than ⅔ of the *required* width of *exits* must be located in the main entrance foyer.

(7) The number of persons accommodated must be calculated according to D2D18.

D2D16 Horizontal exits

[2019: D1.11]

(1) *Horizontal exits* must not be counted as *required exits*—

(a) between *sole-occupancy units*; or

(b) in a Class 9b building used as an *early childhood centre*, primary or secondary *school*.

(2) In a Class 9a *health-care building* or Class 9c building, *horizontal exits* may be counted as *required exits* if the path of travel from a *fire compartment* leads by one or more *horizontal exits* directly into another *fire compartment* which has at least one *required exit* which is not a *horizontal exit*.

(3) In cases other than in (2), *horizontal exits* must not comprise more than half of the *required exits* from any part of a *storey* divided by a *fire wall*.

(4) *Horizontal exits* must have a clear area on the side of the *fire wall* to which occupants are evacuating, to accommodate the total number of persons (calculated under D2D18) served by the *horizontal exit* of not less than—

(a) 2.5 m^2 per patient/resident in a Class 9a *health-care building* or Class 9c *aged care building*; and

(b) 0.5 m^2 per person in any other case.

(5) Where a *fire compartment* is provided with only two *exits*, and one of those *exits* is a *horizontal exit*, the clear area

required by (4) is to be of a size that accommodates all the occupants from the *fire compartment* being evacuated.

(6) In a Class 9b *early childhood centre*, the clear area *required* by (4) must accommodate all occupants of the *early childhood centre*.

(7) The clear area *required* by (4) must be connected to the *horizontal exit* by an unobstructed path that has at least the dimensions *required* for the *horizontal exit* and may include the area of the unobstructed path.

(8) Each *fire compartment required* by C3D6(2) must be served by not less than 2 *horizontal exits*, each located not less than 9 m from—

(a) at least one other *horizontal exit*; and

(b) an *exit* other than a *horizontal exit*.

D2D17 Non-required stairways, ramps or escalators

[2019: D1.12]

An escalator, moving walkway or non-*required* non *fire-isolated stairway* or pedestrian ramp—

(a) must not be used between *storeys* in—

(i) a *patient care area* in a Class 9a *health-care building*; or

(ii) a *resident use area* in a Class 9c building; and

(b) may connect any number of *storeys* if it is—

(i) in an *open spectator stand* or indoor sports stadium; or

(ii) in a *carpark* or an *atrium*; or

(iii) outside a building; or

(iv) in a Class 5 or 6 building that is sprinklered throughout, where the escalator, walkway, stairway or ramp complies with Specification 14; and

(c) except where permitted in (b) must not connect more than—

(i) 3 *storeys* if—

(A) each of those *storeys* is provided with a sprinkler system (other than a FPAA101D system) complying with Specification 17 throughout; and

(B) at least one of those *storeys* is situated at a level at which there is a direct egress to a road or *open space*; or

(ii) 2 *storeys*, provided that those *storeys* are consecutive, and one of the *storeys* is situated at a level at which there is direct egress to a road or *open space*; and

(d) except where permitted in (b) or (c), must not connect, directly or indirectly, more than 2 *storeys* at any level in a Class 5, 6, 7, 8 or 9 building and those *storeys* must be consecutive.

D2D18 Number of persons accommodated

[2019: D1.13]

For the purposes of the *Deemed-to-Satisfy Provisions*, the number of persons accommodated in a *storey*, room or *mezzanine* must be determined with consideration to the purpose for which it is used and the layout of the *floor area* by—

(a) calculating the sum of the numbers obtained by dividing the *floor area* of each part of the *storey* by the number of square metres per person listed in Table D2D18 according to the use of that part, excluding spaces set aside for—

(i) lifts, stairways, ramps and escalators, corridors, hallways, lobbies and the like; and

(ii) service ducts and the like, *sanitary compartments* or other ancillary uses; or

(b) reference to the seating capacity in an *assembly building* or room; or

(c) any other suitable means of assessing its capacity.

NSW Table D2D18

Table D2D18: Area per person according to use

Type of use	Area per person
Art gallery, exhibition area, museum	4 m^2
Bar — standing	0.5m^2
Bar — other	1 m^2
Board room	2 m^2
Boarding house	15 m^2
Cafe, church, dining room	1 m^2
Carpark	30 m^2
Computer room	25 m^2
Court room — judicial area	10 m^2
Court room — public seating	1 m^2
Dance floor	0.5 m^2
Dormitory	5 m^2
Early childhood centre	4 m^2
Factory — machine shop, fitting shop or like place for cutting, grading, finishing or fitting of metals or glass, except in the fabrication of structural steelwork or manufacture of vehicles or bulky products	5 m^2
Factory — areas used for fabrication and processing other than a machine shop, fitting shop or the like.	50 m^2
Factory — a space in which the layout and natural use of fixed plant or equipment determines the number of persons who will occupy the space during working hours	Area per person determined by the use of the plant or equipment
Gymnasium	3 m^2
Hostel, hotel, motel, guest house	15 m^2
Indoor sports stadium—arena	10 m^2
Kiosk	1 m^2
Kitchen, laboratory, laundry	10 m^2
Library — reading space	2 m^2
Library — storage space	30 m^2
Office, including one for typewriting or document copying	10 m^2
Patient care areas	10 m^2
Plant room — ventilation, electrical or other service units	30 m^2
Plant room — boilers or power plant	50 m^2
Reading room	2 m^2
Restaurant	1 m^2
School — general classroom	2 m^2
School — multi-purpose hall	1 m^2
School — staff room	10 m^2
School — trade and practical area — primary	4 m^2
School — trade and practical area — secondary	As for workshop
Shop — space for sale of goods — at a level entered direct from the open air or any lower level	3 m^2
Shop — space for sale of goods — all other levels	5 m^2

Type of use	Area per person
Showroom — display area, covered mall or arcade	5 m^2
Skating rink, based on rink area	1.5 m^2
Spectator stand, audience viewing area — standing viewing area	0.3 m^2
Spectator stand, audience viewing area — removable seating	1 m^2
Spectator stand, audience viewing area — fixed seating	Per number of seats
Spectator stand, audience viewing area — bench seating	450 mm/person
Storage space	30 m^2
Swimming pool, based on pool area	1.5 m^2
Switch room, transformer room	30 m^2
Telephone exchange — private	30 m^2
Theatre and public hall	1 m^2
Theatre dressing room	4 m^2
Transport terminal	2 m^2
Workshop — for maintenance staff	30 m^2
Workshop — for manufacturing processes	As for factory

Table Notes

Bar standing is an area used by the standing patrons and extends not less than 1.5 m wide from the outside edge of the bar top for the length of the serving area of the bar.

D2D19 Measurement of distances

[2019: D1.14]

The nearest part of an *exit* means in the case of—

(a) a *fire-isolated stairway*, *fire-isolated passageway*, or *fire-isolated ramp*, the nearest part of the doorway providing access to them; and

(b) a non-*fire-isolated stairway*, the nearest part of the nearest riser; and

(c) a non-*fire-isolated ramp*, the nearest part of the junction of the floor of the ramp and the floor of the *storey*; and

(d) a doorway opening to a road or *open space*, the nearest part of the doorway; and

(e) a *horizontal exit*, the nearest part of the doorway.

D2D20 Method of measurement

[2019: D1.15]

The following rules apply:

(a) In the case of a room that is not a *sole-occupancy unit* in a Class 2 or 3 building or Class 4 part of a building, the distance includes the straight-line measurement from any point on the floor of the room to the nearest part of a doorway leading from it, together with the distance from that part of the doorway to the single *required exit* or point from which travel in different directions to 2 *required exits* is available.

(b) Subject to (d), the distance from the doorway of a *sole-occupancy unit* in a Class 2 or 3 building or a Class 4 part of a building is measured in a straight line to the nearest part of the *required* single *exit* or point from which travel in different directions to 2 *required exits* is available.

(c) Subject to (d), the distance between *exits* is measured in a straight line between the nearest parts of those *exits*.

(d) Only the shortest distance is taken along a corridor, hallway, external balcony or other path of travel that curves or changes direction.

(e) If more than one corridor, hallway, or other internal path of travel connects *required exits*, for the purposes of D2D6(c) the measurement is along the path of travel through the point at which travel in different directions to those *exits* is available, as determined in accordance with D2D5.

(f) If a wall (including a demountable *internal wall*) that does not bound a room, corridor, hallway or the like causes a change of direction in proceeding to a *required exit*, the distance is measured along the path of travel past that wall.

(g) If permanent fixed seating is provided, the distance is measured along the path of travel between the rows of seats.

(h) In the case of a non-*fire-isolated stairway* or non-*fire-isolated ramp*, the distance is measured along a line connecting the nosings of the treads, or along the slope of the ramp, together with the distance connecting those lines across any intermediate landings.

D2D21 Plant rooms, lift machine rooms and electricity network substations: Concession

[2019: D1.16]

(1) A ladder may be used in lieu of a stairway to provide egress from—

(a) a plant room with a *floor area* of not more than 100 m^2; or

(b) all but one point of egress from a plant room, a lift machine room or a Class 8 *electricity network substation* with a *floor area* of not more than 200 m^2.

(2) A ladder permitted under (1)—

(a) may—

(i) form part of an *exit* provided that in the case of a *fire-isolated stairway* it is contained within the *shaft*; or

(ii) discharge within a *storey* in which case it must be considered as forming part of the path of travel; and

(b) for a plant room or a Class 8 *electricity network substation*, must comply with AS 1657; and

(c) for a lift machine room, where access is provided from within a machine room to a secondary floor, a fixed rung type ladder complying with AS 1657 may be used, provided that—

(i) the height between the floors is not more than 2800 mm; and

(ii) the ladder is inclined at an angle to the horizontal not less than 65 degrees nor more than 75 degrees; and

(iii) the distance between the front face of the ladder and any adjacent obstruction is not less than—

(A) 960 mm, where the ladder is inclined 65 degrees to the horizontal; or

(B) 760 mm, where the ladder is inclined 75 degrees to the horizontal; or

(C) a distance that is determined by interpolating the values in (A) and (B), where the ladder is inclined at any angle between 65 degrees and 75 degrees to the horizontal; and

(iv) a clear space not less than 600 mm exists between the foot of the ladder and any equipment.

SA D2D21(3)

D2D22 Access to lift pits

[2019: D1.17]

Access to lift pits must—

(a) where the pit depth is not more than 3 m, be through the lowest landing doors; or

(b) where the pit depth is more than 3 m, be provided through an access doorway complying with the following:

(i) In lieu of D2D7 to D2D11, the doorway must be level with the pit floor and not be less than 600 mm wide by 1980 mm high clear opening, which may be reduced to 1500 mm where it is necessary to comply with (ii).

(ii) No part of the lift car or platform must encroach on the pit doorway entrance when the car is on a fully compressed buffer.

(iii) Access to the doorway must be by a stairway complying with AS 1657.

(iv) In lieu of D3D26, doors fitted to the doorway must be—

(A) of the horizontal sliding or outwards opening hinged type; and

(B) self-closing and self-locking from the outside; and

(C) marked on the landing side with the letters not less than 35 mm high:

DANGER LIFTWELL – ENTRY OF UNAUTHORIZED PERSONS PROHIBITED – KEEP CLEAR AT ALL TIMES

D2D23 Egress from primary schools

[2019: D1.18]

(1) Every part of a Class 9b primary *school* must be wholly within a *storey* that provides direct egress to a road or *open space*.

(2) The requirements of (1) do not apply to a building with a *rise in storeys* of 4 or less, where the primary *school* is the only use in that building.

Applications

(1) For D2D23(1), a primary *school* includes classrooms, offices, staffrooms, halls, canteens and the like within the primary *school*.

(2) For D2D23(2), a primary *school* includes classrooms, offices, staffrooms, halls, canteens, carparks, end of trip facilities and the like provided solely for the primary *school*, or *school* which incorporates the primary *school*.

Explanatory Information

D2D23(1) recognises the difficulties associated with evacuation of primary *schools*. Should a primary *school* be proposed within a *storey* that does not meet the requirements of D2D23, a *Performance Solution* is to be used to demonstrate compliance with the relevant *Performance Requirements*.

Part D3 Construction of exits

Introduction to this Part

This Part contains *Deemed-to-Satisfy Provisions* for Part D1. It covers safety aspects of parts of a building including stairways, ramps, handrails, balustrades, fall prevention barriers and operation of doors that are part of an *exit*. It also covers fall prevention requirements for openable windows.

Deemed-to-Satisfy Provisions

D3D1 Deemed-to-Satisfy Provisions

[2019: D2.0]

(1) Where a *Deemed-to-Satisfy Solution* is proposed, *Performance Requirements* D1P1 to D1P6, D1P8 and D1P9 are satisfied by complying with—

(a) D2D2 to D2D23, D3D2 to D3D30 and D4D2 to D4D13; and

(b) in a building containing an *atrium*, Part G3; and

(c) in a building in an *alpine area*, Part G4; and

(d) for a building containing an *occupiable outdoor area*, Part G6; and

(e) for additional requirements for Class 9b buildings, Part I1; and

(f) for public transport buildings, Part I2; and

(g) for *farm buildings* and *farm sheds*, Part I3.

(2) Where a *Performance Solution* is proposed the relevant *Performance Requirements* must be determined in accordance with A2G2(3) and A2G4(3) as applicable.

(3) *Performance Requirement* D1P7 must be complied with if lifts are to be used to assist occupants to evacuate a building.

Notes

There are no *Deemed-to-Satisfy Provisions* for D1P7 in respect of using lifts to assist occupants to evacuate a building.

NSW D3D2

D3D2 Application of Part

[2019: D2.1]

Except for—

(a) D3D14, D3D15(a), D3D17, D3D18, D3D19, D3D20, D3D21, D3D22(5), D3D22(6), D3D26 and D3D29, the *Deemed-to-Satisfy Provisions* of this Part do not apply to the internal parts of a *sole-occupancy unit* in a Class 3 building; and

(b) D3D14, D3D15(a), D3D17, D3D18, D3D19, D3D20, D3D21, D3D22(5), D3D22(6), D3D23 and D3D29, the *Deemed-to-Satisfy Provisions* of this Part do not apply to the internal parts of a *sole-occupancy unit* in a Class 2 building or Class 4 part of a building.

D3D3 Fire-isolated stairways and ramps

[2019: D2.2]

A stairway or ramp (including any landings) that is *required* to be within a *fire-resisting shaft* must be constructed—

(a) of *non-combustible* materials; and

(b) so that if there is local failure it will not cause structural damage to, or impair the fire-resistance of, the *shaft*.

D3D4 Non-fire-isolated stairways and ramps

[2019: D2.3]

In a building having a *rise in storeys* of more than 2, *required* stairs and ramps (including landings and any supporting building elements) which are not *required* to be within a *fire-resisting shaft*, must be constructed according to D3D3, or only of—

(a) reinforced or prestressed concrete; or

(b) steel in no part less than 6 mm thick; or

(c) timber that—

(i) has a finished thickness of not less than 44 mm; and

(ii) has an average density of not less than 800 kg/m^3 at a moisture content of 12%; and

(iii) has not been joined by means of glue unless it has been laminated and glued with resorcinol formaldehyde or resorcinol phenol formaldehyde glue.

D3D5 Separation of rising and descending stair flights

[2019: D2.4]

If a stairway serving as an *exit* is *required* to be fire-isolated—

(a) there must be no direct connection between—

(i) a *flight* rising from a *storey* below the lowest level of access to a road or *open space*; and

(ii) a *flight* descending from a *storey* above that level; and

(b) any construction that separates or is common to the rising and descending *flights* must be—

(i) *non-combustible*; and

(ii) smoke proof in accordance with S11C2.

D3D6 Open access ramps and balconies

[2019: D2.5]

Where an open access ramp or balcony is provided to meet the smoke hazard management requirements of E2D4 to E2D13, it must—

(a) have ventilation openings to the outside air which—

(i) have a total unobstructed area not less than the *floor area* of the ramp or balcony; and

(ii) are evenly distributed along the open sides of the ramp or balcony; and

(b) not be enclosed on its open sides above a height of 1 m except by an open grille or the like having a free air space of not less than 75% of its area.

D3D7 Smoke lobbies

[2019: D2.6]

A smoke lobby *required* by D2D12 must—

(a) have a *floor area* not less than 6 m^2; and

(b) be separated from the occupied areas in the *storey* by walls which are impervious to smoke, and—

(i) have an FRL of not less than 60/60/– (which may be fire-protective grade plasterboard, gypsum block with set plaster, face brickwork, glass blocks or glazing); and

(ii) extend from slab to slab, or to the underside of a ceiling with a *resistance to the incipient spread of fire* of 60 minutes which covers the lobby; and

(iii) any construction joints between the top of the walls and the floor slab, roof or ceiling must be smoke sealed with intumescent putty or other suitable material; and

(c) at any opening from the occupied areas, have smoke doors complying with S12C3 and S12C4 except that the smoke sensing device need only be located on the approach side of the opening; and

(d) be pressurised as part of the *exit* if the *exit* is *required* to be pressurised under E2D3.

D3D8 Installations in exits and paths of travel

[2019: D2.7]

(1) Access to service *shafts* and services other than to fire-fighting or detection equipment as permitted in the *Deemed-to-Satisfy Provisions* of Section E, must not be provided from a *fire-isolated stairway*, *fire-isolated passageway* or *fire-isolated ramp*.

(2) An opening to any chute or duct intended to convey hot products of combustion from a boiler, incinerator, fireplace or the like, must not be located in any part of a *required exit* or any corridor, hallway, lobby or the like leading to a *required exit*.

(3) Gas or other fuel services must not be installed in a *required exit*.

(4) Except for in a fire-isolated *exit* specified in (1), services or equipment enclosed in accordance with (5) may be installed in a *required exit*, or in any corridor, hallway, lobby or the like leading to a *required exit*, where that service or equipment comprises—

(a) electricity meters, distribution boards or ducts; or

(b) central telecommunications distribution boards or equipment; or

(c) electrical motors or other motors serving equipment in the building.

(5) An enclosure for the purposes of (4) must be suitably sealed against smoke spreading from the enclosure and be—

(a) *non-combustible* construction; or

(b) a *fire-protective covering*.

(6) Electrical wiring may be installed in a fire-isolated *exit* if the wiring is associated with—

(a) a lighting, detection, or pressurisation system serving the *exit*; or

(b) a security, surveillance or management system serving the *exit*; or

(c) an intercommunication system or an audible or visual alarm system in accordance with D3D27; or

(d) the monitoring of hydrant or sprinkler isolating valves.

D3D9 Enclosure of space under stairs and ramps

[2019: D2.8]

(1) Fire-isolated stairways and ramps — If the space below a *required fire-isolated stairway* or *fire-isolated ramp* is within the fire-isolated *shaft*, it must not be enclosed to form a cupboard or similar enclosed space.

(2) Non fire-isolated stairways and ramps — The space below a *required* non *fire-isolated stairway* (including an external stairway) or non *fire-isolated ramp* must not be enclosed to form a cupboard or other enclosed space unless—

(a) the enclosing walls and ceilings have an FRL of not less than 60/60/60; and

(b) any access doorway to the enclosed space is fitted with a *self-closing* –/60/30 fire door.

D3D10 Width of required stairways and ramps

[2019: D2.9]

A *required* stairway or ramp that exceeds 2 m in width is counted as having a width of only 2 m unless it is divided by a handrail or barrier continuous between landings and each division has a width of not more than 2 m.

D3D11 Pedestrian ramps

[2019: D2.10]

(1) A *fire-isolated ramp* may be substituted for a *fire-isolated stairway* if the construction enclosing the ramp and the width and ceiling height comply with the requirements for a *fire-isolated stairway*.

(2) A ramp serving as a *required exit* must—

(a) where the ramp is also serving as an *accessible* ramp under Part D4, be in accordance with AS 1428.1; or

(b) in any other case, have a gradient not steeper than 1:8.

(3) The floor surface of a ramp must have a slip-resistance classification not less than that listed in Table D3D15 when tested in accordance with AS 4586.

D3D12 Fire-isolated passageways

[2019: D2.11]

(1) The enclosing construction of a *fire-isolated passageway* must have an FRL when tested for a fire outside the passageway in another part of the building of—

(a) if the passageway discharges from a *fire-isolated stairway* or ramp — not less than that *required* for the stairway or ramp *shaft*; or

(b) in any other case — not less than 60/60/60.

(2) Notwithstanding (1)(b), the top construction of a *fire-isolated passageway* need not have an FRL if the walls of the *fire-isolated passageway* extend to the underside of—

(a) a *non-combustible* roof covering; or

(b) a ceiling having a *resistance to the incipient spread of fire* of not less than 60 minutes separating the roof space or ceiling space in all areas surrounding the passageway within the *fire compartment*.

D3D13 Roof as open space

[2019: D2.12]

If an *exit* discharges to a roof of a building, the roof must—

(a) have an FRL of not less than 120/120/120; and

(b) not have any roof lights or other openings within 3 m of the path of travel of persons using the *exit* to reach a road or *open space*.

D3D14 Goings and risers

[2019: D2.13]

NSW D3D14(1)

(1) A stairway must have—

(a) not more than 18 and not less than 2 risers in each *flight*; and

(b) going (G), riser (R) and quantity (2R + G) in accordance with Table D3D14, except as permitted by (2) and (3); and

(c) constant goings and risers throughout each *flight*, except as permitted by (2) and (3), and the dimensions of goings (G) and risers (R) in accordance with (1)(b) are considered constant if the variation between—

(i) adjacent risers, or between adjacent goings, is no greater than 5 mm; and

(ii) the largest and smallest riser within a *flight*, or the largest and smallest going within a *flight*, does not exceed 10 mm; and

(d) risers which do not have any openings that would allow a 125 mm sphere to pass through between the treads; and

(e) treads which have—

(i) a surface with a slip-resistance classification not less than that listed in Table D3D15 when tested in accordance with AS 4586; or

(ii) a nosing strip with a slip-resistance classification not less than that listed in Table D3D15 when tested in accordance with AS 4586; and

(f) treads of solid construction (not mesh or other perforated material) if the stairway is more than 10 m high or connects more than 3 *storeys*; and

(g) in a Class 9b building, not more than 36 risers in consecutive *flights* without a change in direction of at least 30°; and

(h) in the case of a *required* stairway, no winders in lieu of a landing.

(2) In the case of a non-*required* stairway—

(a) the stairway must have—

(i) not more than 3 winders in lieu of a quarter *landing*; and

(ii) not more than 6 winders in lieu of a half *landing*; and

(b) the going of all straight treads must be constant throughout the same *flight* and the dimensions of goings (G) is considered constant if the variation between—

(i) adjacent goings, is no greater than 5 mm; and

(ii) the largest and smallest going within a *flight*, does not exceed 10 mm; and

(c) the going of all winders in lieu of a quarter or half *landing* may vary from the going of the straight treads within the same *flight* provided that the going of all such winders is constant.

(3) Where a stairway discharges to a sloping public walkway or public road—

(a) the riser (R) may be reduced to account for the slope of the walkway or road; and

(b) the quantity (2R+G) may vary at that location.

Table D3D14: Riser and going dimensions

Stairway location	Riser (R)		Going (G)[Note 3]		Quantity (2R + G)	
	Max	Min	Max	Min	Max	Min
Public	190	115	355	250	700	550
Private [Note 1]	190	115	355	240	700	550

Table Notes

(1) Private stairways are—

(a) stairways in a *sole-occupancy unit* in a Class 2 building or Class 4 part of a building; and

(b) in any building, stairways which are not part of a *required exit* and to which the public do not normally have access.

(2) *Going* and *riser* dimensions must be measured in accordance with Figure D3D14.

(3) The *going* in tapered treads (except *winders* in lieu of a quarter or half *landing*) in a curved or spiral stairway is measured—

(a) 270 mm in from the outer side of the unobstructed width of the stairway if the stairway is less than 1 m wide (applicable to a non-*required* stairway only); and

(b) 270 mm from each side of the unobstructed width of the stairway if the stairway is 1 m wide or more.

Figure D3D14: Riser and going dimensions

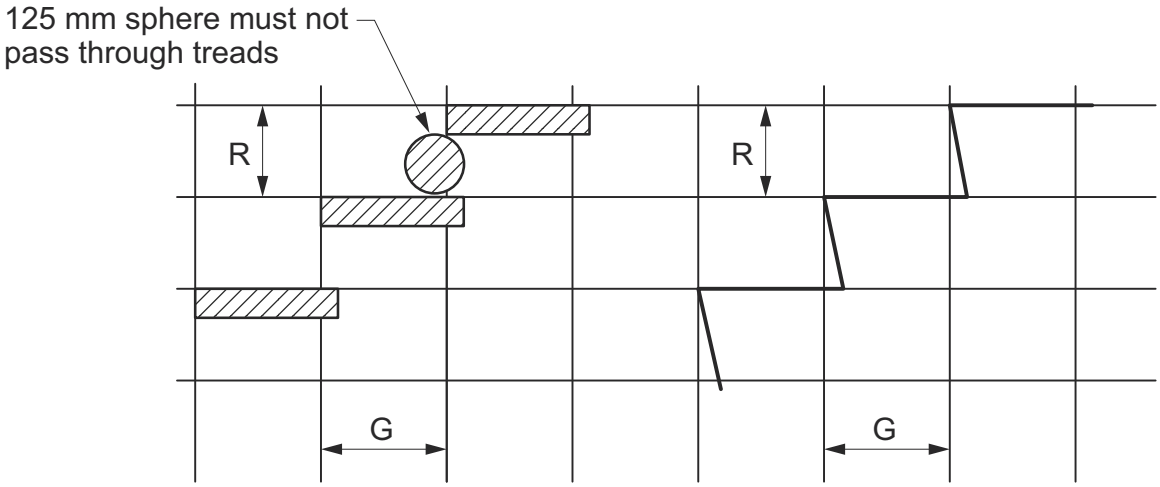

D3D15 Landings

[2019: D2.14]

In a stairway—

(a) *landings* having a maximum gradient of 1:50 may be used in any building to limit the number of risers in each *flight* and each *landing* must—

(i) be not less than 750 mm long, and where this involves a change in direction, the length is measured 500 mm from the inside edge of the *landing*; and

(ii) have—

(A) a surface with a slip-resistance classification not less than that listed in Table D3D15 when tested in accordance with AS 4586; or

(B) a strip at the edge of the *landing* with a slip-resistance classification not less than that listed in Table D3D15 when tested in accordance with AS 4586, where the edge leads to a *flight* below; and

(b) in a Class 9a building—

(i) the area of any *landing* must be sufficient to move a stretcher, 2 m long and 600 mm wide, at a gradient not more than the gradient of the stairs, with at least one end of the stretcher on the *landing* while changing direction between *flights*; or

(ii) the stair must have a change of direction of 180°, and the *landing* a clear width of not less than 1.6 m and a clear length of not less than 2.7 m.

Table D3D15: Slip-resistance classification

Application	Dry surface conditions	Wet surface conditions
Ramp steeper than 1:14	P4 or R11	P5 or R12
Ramp steeper than 1:20 but not steeper than 1:14	P3 or R10	P4 or R11
Tread or *landing* surface	P3 or R10	P4 or R11
Nosing or *landing* edge strip	P3	P4

NSW D3D16

SA D3D16

D3D16 Thresholds

[2019: D2.15]

The threshold of a doorway must not incorporate a step or ramp at any point closer to the doorway than the width of the door leaf unless—

(a) in *patient care areas* in a Class 9a *health-care building*, the door sill is not more than 25 mm above the finished floor level to which the doorway opens; or

(b) in *resident use areas* in a Class 9c building, a ramp is provided with a maximum gradient of 1:8 for a maximum height of 25 mm over the threshold; or

(c) in a building *required* to be *accessible* by Part D4, the doorway—

(i) opens to a road or *open space*; and

(ii) is provided with a threshold ramp or step ramp in accordance with AS 1428.1; or

(d) in other cases—

(i) the doorway opens to a road or *open space*, external stair landing or external balcony; and

(ii) the door sill is not more than 190 mm above the finished surface of the ground, balcony, or the like, to which the doorway opens.

D3D17 Barriers to prevent falls

[2019: D2.16(a), (b) and (c)]

(1) A continuous barrier must be provided along the side of—

(a) a roof to which general access is provided; and

(b) a stairway or ramp; and

(c) a floor, corridor, hallway, balcony, deck, verandah, *mezzanine*, access bridge or the like; and

(d) any delineated path of access to a building,

if the trafficable surface is 1 m or more above the surface beneath.

(2) The requirements of (1) do not apply to—

(a) the perimeter of a *stage*, rigging loft, loading dock or the like; or

(b) areas referred to in D3D23; or

(c) a retaining wall, unless the retaining wall forms part of, or is directly associated with a delineated path of access to a building from the road, or a delineated path of access between buildings; or

(d) a barrier provided to an openable window covered by D3D29.

(3) A barrier *required* by (1) must be constructed in accordance with D3D18, D3D19, D3D20 and, if a wire barrier is used, D3D21.

D3D18 Height of barriers

[2019: Table D2.16a]

NSW D3D18(1)

(1) The height of a barrier *required* by D3D17 must be not less than the following:

(a) For stairways or ramps with a gradient of 1:20 or steeper — 865 mm.

(b) For *landings* to a stair or ramp where the barrier is provided along the inside edge of the *landing* and does not exceed 500 mm in length — 865 mm.

(c) In front of fixed seating on a *mezzanine* or balcony within an auditorium in a Class 9b building, where the horizontal projection extends not less than 1 m outwards from the top of the barrier — 700 mm.

(d) For all other locations — 1 m.

(2) For a barrier provided under (1) —

(a) barrier heights are measured vertically from the surface beneath, except that for stairways the height must be measured above the nosing line of the stair treads; and

(b) a transition zone may be incorporated where the barrier height changes from 865 mm on a stair *flight* or ramp to 1 m at a *landing* or floor.

D3D19 Openings in barriers

[2019: Table D2.16a]

(1) Except where allowed by (2), openings in a *required* barrier must not allow a 125 mm sphere to pass through.

(2) In a *fire-isolated stairway*, *fire-isolated ramp* or other area used primarily for emergency purposes, openings in a *required* barrier—

(a) must not allow a 300 mm sphere to pass through; or

(b) where rails are used—

(i) a 150 mm sphere must not be able to pass through the opening between the nosing line of the stair treads and the rail or between the rail and the floor of the *landing*, balcony or the like; and

(ii) the opening between rails must not be more than 460 mm.

(3) In Class 7 (other than *carparks*) and Class 8 buildings, openings in a *required* barrier—

(a) must not allow a 300 mm sphere to pass through; or

(b) where rails are used—

(i) a 150 mm sphere must not be able to pass through the opening between the nosing line of the stair treads and the rail or between the rail and the floor of the *landing*, balcony or the like; and

(ii) the opening between the rails must not be more than 460 mm.

(4) The requirements of (2) do not apply to external stairways, external ramps, or *fire-isolated stairways* or *fire-isolated ramps* serving Class 9b *early childhood centres*.

(5) For a barrier provided under (1), the maximum 125 mm barrier opening for a stairway, such as a non *fire-isolated stairway*, is measured above the nosing line of the stair treads.

(6) Where a *required* barrier is fixed to the vertical face forming an edge of a *landing*, balcony, deck, stairway or the like, the opening formed between the barrier and the face must not exceed 40 mm.

(7) For the purposes of (6), the opening is measured horizontally from the edge of the trafficable surface to the nearest internal face of the barrier.

D3D20 Barrier climbability

[2019: Table D2.16a]

(1) A barrier *required* by D3D17, located on a floor more than 4 m above the surface beneath, must not incorporate horizontal or near horizontal elements that could facilitate climbing between 150 mm and 760 mm above the floor.

(2) The requirements of (1) do not apply to—

(a) *fire-isolated stairways*, *fire-isolated ramps* and other areas used primarily for emergency purposes, other than—

(i) external stairways; and

(ii) external ramps; and

(b) Class 7 (other than *carparks*) and Class 8 buildings.

D3D21 Wire barriers

[2019: D2.16(d)]

Where a *required* barrier is constructed of wire, it is deemed to meet the requirements of D3D19(1) if it is constructed in accordance with the following:

(a) For horizontal wire systems—

(i) when measured with a strain indicator, it must be in accordance with the tension values in Table D3D21a; or

(ii) must not exceed the maximum deflections in Table D3D21c.

(b) For non-continuous vertical wire systems, when measured with a strain indicator, must be in accordance with the tension values in Table D3D21a (see Note 4).

(c) For continuous vertical or continuous near vertical sloped wire systems—

(i) must have wires of no more than 2.5 mm diameter with a lay of 7×7 or 7×19 construction; and

(ii) changes in direction at support rails must pass around a pulley block without causing permanent deformation to the wire; and

(iii) must have supporting rails, constructed with a spacing of not more than 900 mm, of a material that does not allow deflection that would decrease the tension of the wire under load; and

(iv) when the wire tension is measured with a strain indicator, it must be in accordance with the tension values in Table D3D21b and measured in the furthermost span from the tensioning device.

Table D3D21a: Wire barrier construction – minimum required tension (N) for stainless steel horizontal wires

Wire dia. (mm)	Lay	Wire spacing (mm)	Clear distance between posts (mm)								
			600	800	900	1000	1200	1500	1800	2000	2500
2.5	7x7	60	55	190	263	415	478	823	1080	1139	X
		80	382	630	730	824	1025	1288	X	X	X
		100	869	1218	1368	X	X	X	X	X	X
2.5	1x19	60	35	218	310	402	585	810	1125	1325	X
		80	420	630	735	840	1050	1400	1750	X	X
		100	1140	1565	X	X	X	X	X	X	X
3.0	7x7	60	15	178	270	314	506	660	965	1168	1491
		80	250	413	500	741	818	1083	1370	1565	X
		100	865	1278	1390	1639	X	X	X	X	X
3.0	1x19	60	25	183	261	340	520	790	1025	1180	X
		80	325	555	670	785	1015	1330	1725	1980	X
		100	1090	1500	1705	1910	X	X	X	X	X
4.0	7x7	60	5	73	97	122	235	440	664	813	1178
		80	196	422	480	524	760	1100	1358	1530	2130
		100	835	1182	1360	1528	1837	2381	2811	3098	X
4.0	1x19	60	5	5	10	15	20	147	593	890	1280
		80	30	192	300	415	593	1105	1303	1435	1844
		100	853	1308	1487	1610	2048	2608	3094	3418	3849
4.0	7x19	60	155	290	358	425	599	860	1080	1285	1540
		80	394	654	785	915	1143	1485	1860	2105	2615
		100	1038	1412	1598	1785	2165	2735	X	X	X

Table Notes

(1) Lay = number of strands by the number of individual wires in each strand. For example a lay of 7x19 consists of 7 strands with 19 individual wires in each strand.

(2) Where a change of direction is made in a run of wire, the tensioning device is to be placed at the end of the longest span.

(3) If a 3.2 mm wire is used the tension figures for 3.0 mm wire are applied.

(4) This table may also be used for a set of non-continuous (single) vertical wires forming a barrier using the appropriate

clear distance between posts as the vertical clear distance between the rails.

(5) X = Not allowed because the required tension would exceed the safe load of the wire.

(6) Tension measured with a strain indicator.

Table D3D21b: Continuous wire barrier construction – minimum required tension (N) for vertical or near-vertical stainless steel wires where the maximum clear spacing between the rails is 900mm

Wire dia. (mm)	Lay	Widest spacing between wires (mm)	Required tension (N)
2.5	7x19	80	145
		100	310
		110	610
2.5	7x7	80	130
		100	280
		110	500

Table Notes

(1) Lay = number of strands by the number of individual wires in each strand. For example a lay of 7x19 consists of 7 strands with 19 individual wires in each strand.

(2) Vertical wires require two pulley blocks to each 180° change of direction in the wire.

(3) Near vertical wires may only require one pulley block for each change of direction.

(4) Tension measured with a strain indicator.

(5) The table only includes 7x7 and 7x19 wires due to other wires not having sufficient flexibility to make the necessary turns.

Table D3D21c: Wire barrier construction – maximum permissible deflection of each wire in mm when a 2 kg mass is suspended at mid-span for stainless steel wires

Wire dia. (mm)	Wire spacing (mm)	Clear distance between posts (mm)					
		600	900	1200	1500	1800	2000
2.5	60	17	11	9	8	8	8
	80	7	5	5	5	X	X
3.0	60	19	13	8	7	7	7
	80	8	6	6	5	5	5
4.0	60	18	12	8	8	7	7
	80	8	6	4	4	4	4

Table Notes

(1) Where a change of direction is made in a run of wire the 2 kg mass must be placed at the middle of the longest span.

(2) If a 3.2 mm wire is used the deflection figures for 3.0 mm wire are applied.

(3) This table may also be used for a set of non-continuous (single) vertical wires forming a barrier using the appropriate clear distance between posts as the vertical clear distance between the rails. The deflection (offset) is measured by hooking a standard spring scale to the mid span of each wire and pulling it horizontally until a force of 19.6 N is applied.

(4) X = Not allowed because the required tension would exceed the safe load of the wire.

(5) This table has been limited to 60 mm and 80 mm spaces for 2.5 mm, 3 mm and 4 mm diameter wires because the required wire tensions at greater spacings would require the tension to be beyond the wire safe load limit, or the allowed deflection would be impractical to measure.

D3D22 Handrails

[2019: D2.17]

(1) Except for handrails referred to in D3D23, and subject to (2), handrails must—

(a) be located along at least one side of the ramp or *flight*; and

(b) be located along each side if the total width of the stairway or ramp is 2 m or more; and

(c) in a Class 9b building used as a primary *school* or a building that contains an *early childhood centre*—

(i) have one handrail fixed at a height of not less than 865 mm; and

(ii) in addition to (i), have a handrail—

(A) fixed at a height between 665 mm and 750 mm in a primary *school*; and

(B) with a cross-sectional dimension not less than 16 mm and not greater than 45 mm as measured in any direction across its centre, fixed at a height between 450 mm and 700 mm in a Class 9b *early childhood centre*; and

(d) in any other case, be fixed at a height of not less than 865 mm; and

(e) be continuous between stair *flight* landings and have no obstruction on or above them that will tend to break a hand-hold; and

(f) in a *required exit* serving an area *required* to be *accessible*, be designed and constructed to comply with clause 12 of AS 1428.1, except that clause 12(d) does not apply to a handrail *required* by (1)(c)(ii).

(2) The height *required* by (1)(c) and (d) is measured above the nosings of stair treads and the floor surface of the ramp, landing or the like.

(3) Handrails—

(a) in a Class 9a *health-care building* must be provided along at least one side of every passageway or corridor used by patients, and must be—

(i) fixed not less than 50 mm clear of the wall; and

(ii) where practicable, continuous for their full length; and

(b) in a Class 9c *aged care building* must be provided along both sides of every passageway or corridor used by residents, and must be—

(i) fixed not less than 50 mm clear of the wall; and

(ii) where practicable, continuous for their full length.

(4) Handrails *required* to assist people with a disability must be provided in accordance with D4D4.

(5) Handrails to a stairway or ramp within a *sole-occupancy unit* in a Class 2 or 3 building or Class 4 part of a building must—

(a) be located along at least one side of the *flight* or ramp; and

(b) be located along the full length of the *flight* or ramp, except in the case where a handrail is associated with a barrier, the handrail may terminate where the barrier terminates; and

(c) have the top surface of the handrail not less than 865 mm vertically above the nosings of the stair treads or the floor surface of the ramp; and

(d) have no obstruction on or above them that will tend to break a handhold, except for newel posts, ball type stanchions, or the like.

(6) The requirements of (5) do not apply to—

(a) handrails referred to in D3D23; or

(b) a stairway or ramp providing a change in elevation of less than 1 m; or

(c) a landing; or

(d) a winder where a newel post is installed to provide a handhold.

SA D3D23

D3D23 Fixed platforms, walkways, stairways and ladders

[2019: D2.18]

A fixed platform, walkway, stairway, ladder and any going and riser, landing, handrail or barrier attached thereto may comply with AS 1657 in lieu of D3D14, D3D15, D3D17, D3D18, D3D19, D3D20, D3D21 and D3D22 if it only serves—

(a) machinery rooms, boiler houses, lift-machine rooms, plant-rooms, and the like; or

(b) non-*habitable rooms*, such as attics, storerooms and the like that are not used on a frequent or daily basis in the internal parts of a *sole-occupancy unit* in a Class 2 building or Class 4 part of a building.

D3D24 Doorways and doors

[2019: D2.19]

(1) A doorway in a *resident use area* of a Class 9c building must not be fitted with—

(a) a sliding fire door; or

(b) a sliding smoke door; or

(c) a revolving door; or

(d) a roller shutter door; or

(e) a tilt-up door.

NSW D3D24(2)

(2) A doorway serving as a *required exit* or forming part of a *required exit*, or a doorway in a *patient care area* of a Class 9a *health-care building*—

(a) must not be fitted with a revolving door; and

(b) must not be fitted with a roller shutter or tilt-up door unless—

(i) it serves a Class 6, 7 or 8 building or part with a *floor area* not more than 200 m^2; and

(ii) the doorway is the only *required exit* from the building or part; and

(iii) it is held in the open position while the building or part is lawfully occupied; and

(c) must not be fitted with a sliding door unless—

(i) it leads directly to a road or *open space*; and

(ii) the door is able to be opened manually under a force of not more than 110 N; and

(d) if fitted with a door which is power-operated—

(i) it must be able to be opened manually under a force of not more than 110 N if there is a malfunction or failure of the power source; and

(ii) if it leads directly to a road or *open space* it must open automatically if there is a power failure to the door or on the activation of a fire or smoke alarm anywhere in the *fire compartment* served by the door.

(3) A power-operated door in a path of travel to a *required exit*, except for a door in a *patient care area* of a Class 9a *health-care building* as provided in (2), must be able to be opened manually under a force of not more than 110 N if there is a malfunction or failure of the power source.

D3D25 Swinging doors

[2019: D2.20]

SA D3D25(1)

(1) A swinging door in a *required exit* or forming part of a *required exit*—

(a) must not encroach—

(i) at any part of its swing by more than 500 mm on the *required* width (including any landings) of a *required* stairway, ramp or passageway if it is likely to impede the path of travel of the people already using the *exit*; and

(ii) when fully open, by more than 100 mm on the *required* width of the *required exit*; and

(b) must swing in the direction of egress unless—

(i) it serves a building or part with a *floor area* not more than 200 m^2, it is the only *required exit* from the building or part and it is fitted with a device for holding it in the open position; or

(ii) it serves a *sanitary compartment* or airlock (in which case it may swing in either direction); and

(c) must not otherwise impede the path or direction of egress.

(2) The measurement of encroachment referred to in (1)(a) in each case is to include door handles or other furniture or attachments to the door.

D3D26 Operation of latch

[2019: D2.21]

(1) A door in a *required exit*, forming part of a *required exit* or in the path of travel to a *required exit* must be readily openable without a key from the side that faces a person seeking egress, by—

(a) a single hand downward action on a single device which is located between 900 mm and 1.1 m from the floor and if serving an area *required* to be *accessible* by Part D4—

(i) be such that the hand of a person who cannot grip will not slip from the handle during the operation of the latch; and

(ii) have a clearance between the handle and the back plate or door face at the centre grip section of the handle of not less than 35 mm and not more than 45 mm; or

(b) a single hand pushing action on a single device which is located between 900 mm and 1.2 m from the floor.

(2) Where the latch operation device referred to in (1)(b) is not located on the door leaf itself—

(a) manual controls to power-operated doors must be at least 25 mm wide, proud of the surrounding surface and located—

(i) not less than 500 mm from an internal corner; and

(ii) for a hinged door, between 1 m and 2 m from the door leaf in any position; and

(iii) for a sliding door, within 2 m of the doorway and clear of a surface mounted door in the open position; and

(b) braille and tactile signage complying with S15C3 and S15C6 must identify the latch operation device.

(3) The requirements of (1) and (2) do not apply to a door that—

(a) serves a vault, strong-room, *sanitary compartment*, or the like; or

(b) serves only, or is within—

(i) a *sole-occupancy unit* in a Class 2 building or a Class 4 part of a building; or

(ii) a *sole-occupancy unit* in a Class 3 building (other than an entry door to a *sole-occupancy unit* of a boarding house, guest house, hostel, lodging house or backpacker accommodation); or

(iii) a *sole-occupancy unit* with a *floor area* not more than 200 m^2 in a Class 5, 6, 7 or 8 building; or

(iv) a space which is otherwise inaccessible to persons at all times when the door is locked; or

(c) complies with (4) and serves—

(i) Australian Government Security Zones 4 or 5; or

(ii) the secure parts of a bank, *detention centre*, mental health facility, *early childhood centre* or the like; or

(d) is fitted with a fail-safe device which *automatically* unlocks the door upon the activation of any sprinkler system (other than a FPAA101D system) complying with Specification 17 or smoke, or any other detector system deemed suitable in accordance with AS 1670.1 installed throughout the building, and is readily openable when unlocked; or

(e) is in a Class 9a or 9c building and—

(i) is one leaf of a two-leaf door complying with D2D9(a) or D2D9(d) provided that it is not held closed by a locking mechanism and is readily openable; and

(ii) the door is not *required* to be a fire door or smoke door.

(4) A door referred to in (3)(c) must be able to be immediately unlocked—

(a) by operating a fail-safe control switch, not contained within a protective enclosure, to actuate a device to unlock the door; or

(b) by hand by a person or persons, specifically nominated by the owner, properly instructed as to the duties and responsibilities involved and available at all times when the building is lawfully occupied so that persons in the building or part may immediately escape if there is a fire.

NSW D3D26(5)

(5) The requirements of (1) and (2) do not apply in a Class 9b building (other than a *school*, an *early childhood centre* or a building used for religious purposes) to a door in a *required exit*, forming part of a *required exit* or in the path of travel to a *required exit* serving a *storey* or room accommodating more than 100 persons, determined in accordance with D2D18, in which case it must be readily openable—

(a) without a key from the side that faces a person seeking egress; and

(b) by a single hand pushing action on a single device such as a panic bar located between 900 mm and 1.2 m from the floor; and

(c) where a two-leaf door is fitted, the provisions of (a) and (b) need only apply to one door leaf if the appropriate requirements of D2D9 are satisfied by the opening of that one leaf.

NSW D3D26(6)

VIC D3D26(6)

D3D27 Re-entry from fire-isolated exits

[2019: D2.22]

(1) Doors of a fire-isolated *exit* must not be locked from the inside as follows:

(a) In a Class 9a *health-care building*.

(b) In a Class 9b *early childhood centre*.

(c) In a Class 9c building.

(d) In a fire-isolated *exit* serving any storey above an *effective height* of 25 m, throughout the *exit*.

(2) The requirements of (1)(a), (c) and (d) do not apply to a door fitted with a fail-safe device that *automatically* unlocks the door upon the activation of a fire alarm and—

(a) on at least every fourth *storey*, the doors are not able to be locked and a sign is fixed on such doors stating that re-entry is available; or

(b) an intercommunication system, or an audible or visual alarm system, operated from within the enclosure is provided near the doors and a sign is fixed adjacent to such doors explaining its purpose and method of operation.

(3) The requirements of (1)(b) do not apply to a door fitted with a fail-safe device that *automatically* unlocks the door serving the Class 9b *early childhood centre* upon the activation of a fire alarm.

D3D28 Signs on doors

[2019: D2.23]

(1) A sign, to alert persons that the operation of certain doors must not be impaired, must be installed where it can readily be seen on, or adjacent to—

(a) a *required*—

(i) fire door providing direct access to a fire-isolated *exit*, except a door providing direct egress from a *sole-occupancy unit* in a Class 2 or 3 building or Class 4 part of a building; and

(ii) smoke door; and

(b) any door which is a—

(i) fire door forming part of a *horizontal exit*; and

(ii) smoke door that swings in both directions; and

(iii) door leading from a fire isolated *exit* to a road or *open space*.

(2) A sign *required* by (1)(a) must be fixed on the side of the door that faces a person seeking egress and, if the door is fitted with a device for holding it in the open position, either a sign must be fixed on the wall adjacent to the doorway, or signs must be fixed to both sides of the door.

(3) A sign *required* by (1)(b) must be fixed on each side of the door.

(4) A sign referred to in (1) must be in capital letters not less than 20 mm high in a colour contrasting with the background and state the following:

(a) For an *automatic* door held open by an *automatic* hold-open device—

FIRE SAFETY DOOR — DO NOT OBSTRUCT

(b) For a *self-closing* door—

DO NOT OBSTRUCT

DO NOT KEEP OPEN

FIRE SAFETY DOOR

(c) For a door discharging from a fire-isolated *exit*—

FIRE SAFETY DOOR — DO NOT OBSTRUCT

D3D29 Protection of openable windows

[2019: D2.24]

(1) A window opening must be provided with protection, if the floor below the window is 2 m or more above the surface beneath in—

(a) a bedroom in a Class 2 or 3 building or Class 4 part of a building; or

(b) a Class 9b *early childhood centre*.

(2) Where the lowest level of the window opening is less than 1.7 m above the floor, a window opening covered by (1) must comply with the following:

(a) The openable portion of the window must be protected with—

(i) a device capable of restricting the window opening; or

(ii) a screen with secure fittings.

(b) A device or screen *required* by (a) must—

(i) not permit a 125 mm sphere to pass through the window opening or screen; and

(ii) resist an outward horizontal action of 250 N against the—

(A) window restrained by a device; or

(B) screen protecting the opening; and

(iii) have a child resistant release mechanism if the screen or device is able to be removed, unlocked or overridden.

(3) A barrier with a height not less than 865 mm above the floor is *required* to an openable window—

(a) in addition to window protection, when a child resistant release mechanism is *required* by (2)(b)(iii); and

(b) where the floor below the window is 4 m or more above the surface beneath if the window is not covered by (1).

(4) A barrier covered by (3) except for (5) must not—

(a) permit a 125 mm sphere to pass through it; and

(b) have any horizontal or near horizontal elements between 150 mm and 760 mm above the floor that facilitate climbing.

(5) A barrier *required* by (3) to an openable window in—

(a) *fire-isolated stairways*, *fire-isolated ramps* and other areas used primarily for emergency purposes, excluding external stairways and external ramps; and

(b) Class 7 (other than *carparks*) and Class 8 buildings and parts of buildings containing those classes,

must not permit a 300 mm sphere to pass through it.

D3D30 Timber stairways: Concession

[2019: D2.25]

(1) Notwithstanding D3D3(a), timber treads, risers, landings and associated supporting framework within a *required fire-isolated stairway* or *fire-isolated passageway* may be constructed from *fire-protected timber* in accordance with C2D13—

(a) if the timber—

(i) has a finished thickness of not less than 44 mm; and

(ii) has an average density of not less than 800 kg/m^3 at a moisture content of 12%; and

(b) subject to—

(i) the building being protected throughout by a sprinkler system (other than a FPAA101D system) complying with Specification 17 which extends to within the fire-isolated enclosure; and

(ii) fire protection being provided to the underside of stair *flights* and landings located immediately above a landing level which—

(A) is at or near the level of egress; or

(B) provides direct access to a carpark.

(2) Fire protection required by (1) must be not less than one layer of 13 mm fire-protective grade plasterboard fixed in accordance with the system requirements for a *fire-protective covering*.

NSW D3D31

Part D4 Access for people with a disability

Introduction to this Part

This Part contains *Deemed-to-Satisfy Provisions* for Part D1. It covers which buildings, and parts of a building, must be *accessible*, provision of *accessible* carparking spaces, braille and tactile signage, hearing augmentation, tactile ground surface indicators and seating in *assembly buildings* (e.g. cinemas), and access to *swimming pools*.

Deemed-to-Satisfy Provisions

D4D1 Deemed-to-Satisfy Provisions

[2019: D3.0]

TAS D4D1(1)

(1) Where a *Deemed-to-Satisfy Solution* is proposed, *Performance Requirements* D1P1 to D1P6, D1P8 and D1P9 are satisfied by complying with—

(a) D2D2 to D2D23, D3D2 to D3D30 and D4D2 to D4D13; and

(b) in a building containing an *atrium*, Part G3; and

(c) in a building in an *alpine area*, Part G4; and

(d) for additional requirements for Class 9b buildings, Part I1; and

(e) for public transport buildings, Part I2.

(2) Where a *Performance Solution* is proposed, the relevant *Performance Requirements* must be determined in accordance with A2G2(3) and A2G4(3) as applicable.

TAS D4D1(3)

(3) *Performance Requirement* D1P7 must be complied with if lifts are to be used to assist occupants to evacuate a building.

D4D2 General building access requirements

[2019: D3.1, Table D3.1]

(1) Buildings and parts of buildings must be *accessible* as *required* by this clause, unless exempted by D4D5.

(2) Access requirements for a Class 1b building are as follows:

(a) Dwellings located on one allotment and used for short-term holiday accommodation — to and within a number of dwellings determined in accordance with Table D4D2a.

(b) A boarding house, bed and breakfast, guest house, hostel or the like, other than those described in (a) — to and within—

(i) 1 bedroom and associated sanitary facilities; and

(ii) not less than 1 of each type of room or space for use in common by the residents or guests, including a cooking facility, sauna, gymnasium, *swimming pool*, laundry, games room, eating area, or the like; and

(iii) rooms or spaces for use in common by all residents on a floor to which access by way of a ramp complying with AS 1428.1 or a passenger lift is provided.

(3) For the purposes of (2)(a), a community or strata-type subdivision or development is considered to be on a single allotment.

SA D4D2(4)

(4) For a Class 2 building, common areas are to be *accessible* as follows:

(a) From a pedestrian entrance *required* to be *accessible* to at least 1 floor containing *sole-occupancy units* and to

the entrance doorway of each *sole-occupancy unit* located on that level.

(b) To and within not less than 1 of each type of room or space for use in common by the residents, including a cooking facility, sauna, gymnasium, *swimming pool*, common laundry, games room, individual shop, eating area, or the like.

(c) Where a ramp complying with AS 1428.1 or a passenger lift is installed—

(i) to the entrance doorway of each *sole-occupancy unit*; and

(ii) to and within rooms or spaces for use in common by the residents.

(d) The requirements of (c) only apply where the space referred to in (c)(i) or (ii) is located on the levels served by the lift or ramp.

(5) For a Class 3 building, access requirements are as follows:

(a) Common areas:

(i) From a pedestrian entrance *required* to be *accessible* to at least 1 floor containing *sole-occupancy units* and to the entrance doorway of each *sole-occupancy unit* located on that level.

(ii) To and within not less than 1 of each type of room or space for use in common by the residents, including a cooking facility, sauna, gymnasium, *swimming pool*, common laundry, games room, TV room, individual shop, dining room, public viewing area, ticket purchasing service, lunch room, lounge room, or the like.

(iii) Where a ramp complying with AS 1428.1 or a passenger lift is installed—

(A) to the entrance doorway of each *sole-occupancy unit*; and

(B) to and within rooms or spaces for use in common by the residents.

(iv) The requirements of (iii) only apply where the space referred to in (A) and (B) are located on the levels served by the lift or ramp.

(b) To and within *sole-occupancy units* — in accordance with Table D4D2b.

(6) For Class 5, 6, 7b, 8 and 9a buildings, access must be provided to and within all areas normally used by the occupants.

(7) For a Class 7a building, access must be provided to and within any level containing *accessible* carparking spaces.

(8) For a Class 9b building, access requirements are as follows:

(a) *Schools* and *early childhood centres* — to and within all areas normally used by the occupants.

(b) An *assembly building*, not being a *school* or *early childhood centre* — to and within —

(i) wheelchair seating spaces provided in accordance with D4D10; and

(ii) all other areas normally used by the occupants, except that access need not be provided to tiers or platforms of seating areas that do not contain wheelchair seating spaces.

(9) For a Class 9c building, access requirements are as follows:

(a) Common areas:

(i) From a pedestrian entrance *required* to be *accessible* to at least 1 floor containing *sole-occupancy units* and to the entrance doorway of each *sole-occupancy unit* located on that level.

(ii) To and within not less than 1 of each type of room or space for use in common by the residents, including a cooking facility, sauna, gymnasium, *swimming pool*, common laundry, games room, TV room, individual shop, dining room, public viewing area, ticket purchasing service, lunch room, lounge room, or the like.

(iii) Where a ramp complying with AS 1428.1 or a passenger lift is installed—

(A) to the entrance doorway of each *sole-occupancy unit*; and

(B) to and within rooms or spaces for use in common by the residents.

(iv) The requirements of (iii) only apply where the space referred to in (iii)(A) or (iii)(B) is located on the levels served by the lift or ramp.

(b) *Sole-occupancy units* — to and within a number of *sole-occupancy units* determined in accordance with Table D4D2b.

(10) For a Class 10 building, access requirements are as follows:

(a) For a Class 10a non-habitable building located in an *accessible* area intended for use by the public and containing a sanitary facility, change room facility or shelter, to and within—

(i) an *accessible* sanitary facility; and

(ii) a change room facility; and

(iii) a public shelter or the like.

(b) For Class 10b *swimming pools*, to and into *swimming pools* with a total perimeter greater than 40 m, associated with a Class 1b, 2, 3, 5, 6, 7, 8 or 9 building that is *required* to be *accessible*, but not *swimming pools* for the exclusive use of occupants of a Class 1b building or a *sole-occupancy unit* in a Class 2 or Class 3 building.

Table D4D2a: Requirements for access for people with a disability – sole-occupancy units in a Class 1b building

Total number of dwellings	Number *required* to be *accessible*
4 to 10	1
11 to 40	2
41 to 60	3
61 to 80	4
81 to 100	5
More than 100	5 dwellings plus 1 additional dwelling for each additional 30 dwellings or part thereof in excess of 100 dwellings.

Table D4D2b: Requirements for access for people with a disability – sole-occupancy units in a Class 3 or 9c building

Total number of *sole-occupancy units*	Number *required* to be *accessible*
1 to 10	1
11 to 40	2
41 to 60	3
61 to 80	4
81 to 100	5
101 to 200	5 *sole-occupancy units* plus 1 additional *sole-occupancy unit* for each additional 25 units or part thereof in excess of 100.
201 to 500	9 *sole-occupancy units* plus 1 additional *sole-occupancy unit* for each additional 30 units or part thereof in excess of 200.
More than 500	19 *sole-occupancy units* plus 1 additional *sole-occupancy unit* for each additional 50 units or part thereof in excess of 500.

Table Notes

(1) In a Class 3 building, not more than 2 *required accessible sole-occupancy units* may be located adjacent to each other.

(2) In a Class 3 or 9c building where more than 2 *accessible sole-occupancy units* are *required*, they must be representative of the range of rooms available.

D4D3 Access to buildings

[2019: D3.2]

(1) An *accessway* must be provided to a building *required* to be *accessible*—

(a) from the main points of a pedestrian entry at the allotment boundary; and

(b) from another *accessible* building connected by a pedestrian link; and

(c) from any *required accessible* carparking space on the allotment.

(2) In a building *required* to be *accessible*, an *accessway* must be provided through the principal pedestrian entrance, and—

(a) through not less than 50% of all pedestrian entrances including the principal pedestrian entrance; and

(b) in a building with a total *floor area* more than 500 m^2, a pedestrian entrance which is not *accessible* must not be located more than 50 m from an *accessible* pedestrian entrance,

except for pedestrian entrances serving only areas exempted by D4D5.

(3) Where a pedestrian entrance *required* to be *accessible* has multiple doorways—

(a) if the pedestrian entrance consists of not more than 3 doorways — not less than 1 of those doorways must be *accessible*; and

(b) if a pedestrian entrance consists of more than 3 doorways — not less than 50% of those doorways must be *accessible*.

(4) For the purposes of (3)—

(a) an *accessible* pedestrian entrance with multiple doorways is considered to be one pedestrian entrance where—

(i) all doorways serve the same part or parts of the building; and

(ii) the distance between each doorway is not more than the width of the widest doorway at that pedestrian entrance (see Figure D4D3); and

(b) a doorway is considered to be the clear, unobstructed opening created by the opening of one or more door leaves (see Figure D4D3).

(5) Where a doorway on an *accessway* has multiple leaves (except an automatic opening door), one of those leaves must have a clear opening width of not less than 850 mm in accordance with AS 1428.1.

Figure D4D3: Doorways and pedestrian entrances for access purposes

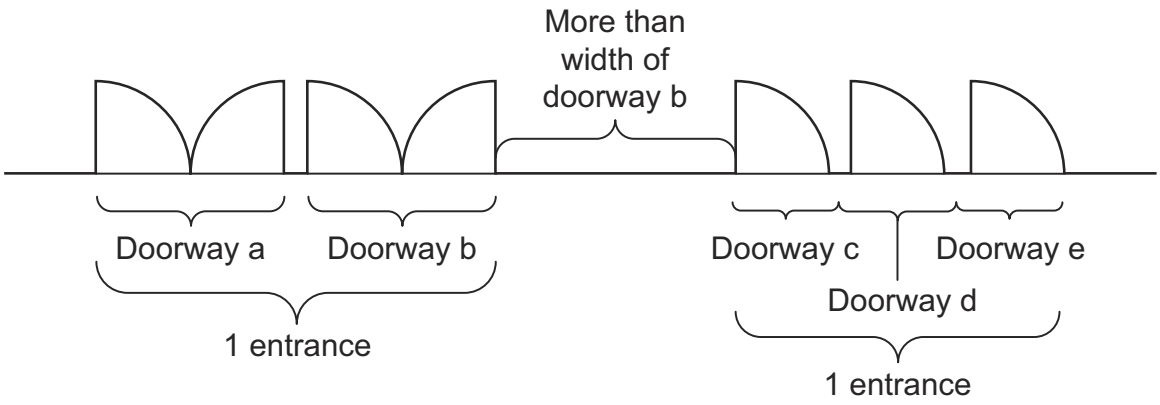

D4D4 Parts of buildings to be accessible

[2019: D3.3]

In a building *required* to be *accessible*—

(a) every ramp and stairway, except for ramps and stairways in areas exempted by D4D5, must comply with—

(i) for a ramp, except a *fire-isolated ramp*, clause 10 of AS 1428.1; and

(ii) for a stairway, except a *fire-isolated stairway*, clause 11 of AS 1428.1; and

(iii) for a *fire-isolated stairway*, clause 11.1(f) and (g) of AS 1428.1; and

(b) every passenger lift must comply with E3D7 and E3D8; and

(c) *accessways* must have—

(i) passing spaces complying with AS 1428.1 at maximum 20 m intervals on those parts of an *accessway* where a direct line of sight is not available; and

(ii) turning spaces complying with AS 1428.1—

(A) within 2 m of the end of *accessways* where it is not possible to continue travelling along the *accessway*; and

(B) at maximum 20 m intervals along the *accessway*; and

(d) an intersection of *accessways* satisfies the spatial requirements for a passing and turning space; and

(e) a passing space may serve as a turning space; and

(f) a ramp complying with AS 1428.1 or a passenger lift need not be provided to serve a *storey* or level other than the entrance *storey* in a Class 5, 6, 7b or 8 building—

(i) containing not more than 3 *storeys*; and

(ii) with a *floor area* for each *storey*, excluding the entrance *storey*, of not more than 200 m^2; and

(g) clause 7.4.1(a) of AS 1428.1 does not apply and is replaced with 'the pile height or pile thickness shall not exceed 11 mm and the carpet backing thickness shall not exceed 4 mm'; and

(h) the carpet pile height or pile thickness dimension, carpet backing thickness dimension and their combined dimension shown in Figure 8 of AS 1428.1 do not apply and are replaced with 11 mm, 4 mm and 15 mm respectively.

SA D4D5

TAS D4D5

D4D5 Exemptions

[2019: D3.4]

The following areas are not *required* to be *accessible*:

(a) An area where access would be inappropriate because of the particular purpose for which the area is used.

(b) An area that would pose a health or safety risk for people with a disability.

(c) Any path of travel providing access only to an area exempted by (a) or (b).

D4D6 Accessible carparking

[2019: D3.5, Table D3.5]

(1) *Accessible* carparking spaces—

(a) subject to (b), must be provided in accordance with (2) in—

(i) a Class 7a building *required* to be *accessible*; and

(ii) a carparking area on the same allotment as a building *required* to be *accessible*; and

(b) need not be provided in a Class 7a building or a carparking area where a parking service is provided and direct access to any of the carparking spaces is not available to the public; and

(c) subject to (d), must comply with AS/NZS 2890.6; and

(d) need not be identified with signage where there is a total of not more than 5 carparking spaces, so as to restrict the use of the carparking space only for people with a disability.

(2) For each class of building to which the *carpark* or carparking area is associated, the number of *accessible* carparking spaces *required* is as follows:

(a) Class 1b and 3 buildings:

(i) For a boarding house, guest house, hostel, lodging house, backpackers' accommodation or the residential part of a hotel or motel, the number of *accessible* carparking spaces *required* is to be calculated by multiplying the total number of carparking spaces by the percentage of —

(A) *accessible sole-occupancy units* to the total number of *sole-occupancy units*; or

(B) *accessible* bedrooms to the total number of bedrooms.

(ii) For the purposes of (i), the calculated number is taken to the next whole figure.

(iii) For a residential part of a *school*, accommodation for the aged, disabled or children, residential part of a

health-care building which accommodates members of staff or the residential part of a *detention centre* — 1 *accessible* space for every 100 carparking spaces or part thereof.

(b) Class 5, 7, 8 or 9c buildings — 1 *accessible* space for every 100 carparking spaces or part thereof.

(c) Class 6 buildings—

(i) with up to 1000 carparking spaces — 1 *accessible* space for every 50 carparking spaces or part thereof; and

(ii) for each additional 100 carparking spaces or part thereof in excess of 1000 carparking spaces — 1 *accessible* space.

(d) Class 9a buildings:

(i) For a hospital (non-outpatient area) — 1 *accessible* space for every 100 carparking spaces or part thereof.

(ii) For a hospital (outpatient area)—

(A) with up to 1000 carparking spaces — 1 *accessible* space for every 50 carparking spaces or part thereof; and

(B) for each additional 100 carparking spaces or part thereof in excess of 1000 carparking spaces — 1 *accessible* space.

(iii) For a nursing home — 1 *accessible* space for every 100 carparking spaces or part thereof.

(iv) For a clinic or day surgery not forming part of a hospital — 1 *accessible* space for every 50 carparking spaces or part thereof.

(e) Class 9b buildings:

(i) For a *school* — 1 *accessible* space for every 100 carparking spaces or part thereof.

(ii) For other *assembly buildings*—

(A) with up to 1000 carparking spaces — 1 *accessible* space for every 50 carparking spaces or part thereof; and

(B) for each additional 100 carparking spaces or part thereof in excess of 1000 carparking spaces — 1 *accessible* space.

D4D7 Signage

[2019: D3.6]

(1) In a building *required* to be *accessible*—

(a) braille and tactile signage complying with Specification 15 must—

(i) incorporate the international symbol of access or deafness, as appropriate, in accordance with AS 1428.1 and identify each—

(A) sanitary facility, except a sanitary facility associated with a bedroom in a Class 1b building or a *sole-occupancy unit* in a Class 3 or Class 9c building; and

(B) space with a hearing augmentation system; and

(ii) identify each door *required* by E4D5 to be provided with an *exit* sign and state—

(A) “Exit”; and

(B) “Level”; and

(C) the floor level number or floor level descriptor, or a combination of the two.

(b) signage including the international symbol for deafness in accordance with AS 1428.1 must be provided within a room containing a hearing augmentation system identifying—

(i) the type of hearing augmentation; and

(ii) the area covered within the room; and

(iii) if receivers are being used and where the receivers can be obtained; and

(c) signage in accordance with AS 1428.1 must be provided for *accessible* unisex sanitary facilities to identify if the facility is suitable for left or right handed use; and

(d) signage to identify an ambulant *accessible* sanitary facility in accordance with AS 1428.1 must be located on the door of the facility; and

(e) where a pedestrian entrance is not *accessible*, directional signage incorporating the international symbol of access, in accordance with AS 1428.1, must be provided to direct a person to the location of the nearest *accessible* pedestrian entrance; and

(f) where a bank of sanitary facilities is not provided with an *accessible* unisex sanitary facility, directional signage incorporating the international symbol of access in accordance with AS 1428.1 must be placed at the location of the sanitary facilities that are not *accessible*, to direct a person to the location of the nearest *accessible* unisex sanitary facility.

(2) In a building that is subject to F4D12 and is *required* to be *accessible*, directional signage complying with Specification 15 to direct a person to the location of the nearest *accessible* adult change facility within that building must be provided at the location of each—

(a) bank of sanitary facilities; and

(b) *accessible* unisex sanitary facility, other than one that incorporates an *accessible* adult change facility.

D4D8 Hearing augmentation

[2019: D3.7]

(1) A hearing augmentation system must be provided where an inbuilt amplification system, other than one used only for emergency warning, is installed—

(a) in a room in a Class 9b building; or

(b) in an auditorium, conference room, meeting room or room for judicatory purposes; or

(c) at any ticket office, teller's booth, reception area or the like, where the public is screened from the service provider.

(2) If a hearing augmentation system *required* by (1) is—

(a) an induction loop, it must be provided to not less than 80% of the *floor area* of the room or space served by the inbuilt amplification system; or

(b) a system requiring the use of receivers or the like, it must be available to not less than 95% of the *floor area* of the room or space served by the inbuilt amplification system, and the number of receivers provided must not be less than—

(i) if the room or space accommodates up to 500 persons, 1 receiver for every 25 persons or part thereof, or 2 receivers, whichever is the greater; and

(ii) if the room or space accommodates more than 500 persons but not more than 1000 persons, 20 receivers plus 1 receiver for every 33 persons or part thereof in excess of 500 persons; and

(iii) if the room or space accommodates more than 1000 persons but not more than 2000 persons, 35 receivers plus 1 receiver for every 50 persons or part thereof in excess of 1000 persons; and

(iv) if the room or space accommodates more than 2000 persons, 55 receivers plus 1 receiver for every 100 persons or part thereof in excess of 2000 persons.

(3) The number of persons accommodated in the room or space served by an inbuilt amplification system must be calculated according to D2D18.

(4) Any screen or scoreboard associated with a Class 9b building and capable of displaying public announcements must be capable of supplementing any public address system, other than a public address system used for emergency warning purposes only.

D4D9 Tactile indicators

[2019: D3.8]

(1) For a building *required* to be *accessible*, tactile ground surface indicators must be provided to warn people who are blind or have a vision impairment that they are approaching—

(a) a stairway, other than a *fire-isolated stairway*; and

(b) an escalator; and

(c) a passenger conveyor or moving walk; and

(d) a ramp other than a *fire-isolated ramp*, step ramp, kerb ramp or *swimming pool* ramp; and

(e) in the absence of a suitable barrier—

(i) an overhead obstruction less than 2 m above floor level, other than a doorway; and

(ii) an *accessway* meeting a vehicular way adjacent to any pedestrian entrance to a building, excluding a pedestrian entrance serving an area referred to in D4D5, if there is no kerb or kerb ramp at that point,

except for areas exempted by D4D5.

(2) Tactile ground surface indicators *required* by (1) must comply with sections 1 and 2 of AS/NZS 1428.4.1.

(3) A hostel for the aged, nursing home for the aged, a *residential aged care building*, Class 3 accommodation for the aged, Class 9a *health-care building* or a Class 9c *aged care building* need not comply with (1)(a) and (d) if handrails incorporating a raised dome button in accordance with AS/NZS 1428.4.1 are provided to warn people who are blind or have a vision impairment that they are approaching a stairway or ramp.

D4D10 Wheelchair seating spaces in Class 9b assembly buildings

[2019: D3.9]

Where fixed seating is provided in a Class 9b *assembly building*, wheelchair seating spaces complying with AS 1428.1 must be provided in accordance with the following:

(a) The number and grouping of wheelchair seating spaces must be in accordance with Table D4D10.

(b) In a cinema—

(i) with not more than 300 seats — wheelchair seating spaces must not be located in the front row of seats; and

(ii) with more than 300 seats — not less than 75% of *required* wheelchair seating spaces must be located in rows other than the front row of seats.

Table D4D10: Wheelchair seating spaces in Class 9b assembly buildings

Fixed seats in a room or space	Wheelchair spaces Note 1		Grouping and location			Spaces must represent range of seating provided Note 3
	Minimum spaces required	1 additional space required per Note 2	Min. single spaces	Min. groups of 2 spaces	Max. spaces in any other group	
Up to 150	3	N/A	1	1	N/A	No
151 to 800	3	50 seats in excess of 150 seats	1	1	5	No
801 to 10 000	16	100 seats in excess of 800 seats	2	2	5	Yes
More than 10 000	108	200 seats in excess of 10 000 seats	5	5	10	Yes

Table Notes

(1) The total number of *required* wheelchair spaces is the sum of the minimum spaces *required* (left column) and the additional spaces *required* (right column).

(2) The first number referred to includes any part of that number (e.g. 1 additional space *required* per 50 seats or part thereof).

(3) This means that the location of *required* wheelchair spaces must be representative of the range of seating provided.

D4D11 Swimming pools

[2019: D3.10]

(1) Not less than 1 means of *accessible* water entry/exit in accordance with Specification 16 must be provided for each *swimming pool required* by D4D2 to be *accessible*.

(2) An *accessible* entry/exit must be by means of—

(a) a fixed or movable ramp and an aquatic wheelchair; or

(b) a zero depth entry and an aquatic wheelchair; or

(c) a platform *swimming pool* lift and an aquatic wheelchair; or

(d) a sling-style *swimming pool* lift.

(3) Where a *swimming pool* has a perimeter of more than 70 m, at least one *accessible* water entry/exit must be provided by a means specified in (2)(a), (b) or (c).

(4) Latching devices on gates and doors forming part of a *swimming pool* safety barrier need not comply with AS 1428.1.

D4D12 Ramps

[2019: D3.11]

On an *accessway*—

(a) a series of connected ramps must not have a combined vertical rise of more than 3.6 m; and

(b) a landing for a step ramp must not overlap a landing for another step ramp or ramp.

D4D13 Glazing on an accessway

[2019: D3.12]

On an *accessway*, where there is no chair rail, handrail or transom, all frameless or fully glazed doors, sidelights and any glazing capable of being mistaken for a doorway or opening, must be clearly marked in accordance with AS 1428.1.

TAS D4D14

Specification 14 Non-required stairways, ramps and escalators

S14C1 Scope

[2019: Spec D1.12: 1]

(1) This Specification contains the requirements to allow non-*required* stairways, ramps or escalators to connect any number of *storeys* in a Class 5 or 6 building.

(2) The requirements do not apply in an *atrium* or outside a building.

S14C2 Requirements

[2019: Spec D1.12: 2]

An escalator, moving walkway or non-*required* non-*fire-isolated stairway* or pedestrian ramp must comply with the following:

(a) The escalator, walkway, stairway or ramp must be bounded by a *shaft* of—

(i) construction with an FRL of not less than 120/120/120 if *loadbearing* or –/120/120 if non-*loadbearing* and, if of *lightweight construction*, must comply with Specification 6; or

(ii) glazed construction with an FRL of not less than –/60/30 protected by a wall wetting system in accordance with S31C2 to S31C6.

(b) The void of each non-*required* stairway, ramp or escalator must not connect more than 2 *storeys*.

(c) Rising and descending escalators, walkways, stairways and ramps within one *shaft* must be separated by construction with an FRL of not less than –/60/30.

(d) Openings into the *shaft* must be protected by fire doors with an FRL not less than –/60/30.

(e) When the fire door is in the closed position, the floor or any covering over the floor beneath the fire door must not be *combustible*.

(f) Fire doors must be fitted with smoke seals and the assembly must be tested in accordance with AS 1530.4.

(g) Fire doors must be—

(i) closed and locked for security reasons; or

(ii) held open and be *automatic* closing.

(h) Smoke detectors must be installed on both sides of the opening, not more than 1.5 m horizontal distance from the opening.

(i) In the closed position, fire doors must be openable on a single hand downward action or horizontal pushing action on a single device within the shaft and by key only from outside the *shaft*.

(j) A warning sign must be displayed where it can readily be seen outside the *shaft* near all fire doors opening to the *shaft*, and must comply with the details and dimensions of Figure S14C2.

(k) All doors opening into the *shaft* must be within 20 m of a *required exit*.

(l) Signs showing the direction of the nearest *required exit* must be installed where they can be readily seen.

(m) Materials attached to any wall, ceiling or floor within the *shaft* must comply with Specification 7.

(n) Emergency lighting must be installed in the *shaft* in accordance with E4D4.

(o) No step or ramp may be closer to the threshold of the doorway than the width of the door leaf.

Figure S14C2: Warning sign for non-required stairway, ramp or escalator

DO NOT USE THIS STAIRWAY IF THERE IS A FIRE	=20 mm

OR

Do not use this stairway if there is a fire	=16 mm

Specification 15 Braille and tactile signs

S15C1 Scope

[2019: Spec D3.6: 1]

This Specification sets out the requirements for the design and installation of braille and tactile signage as *required* by D3D26, D4D7 and Specification 27.

S15C2 Location of braille and tactile signs

[2019: Spec D3.6: 2]

Signs including symbols, numbering and lettering must be designed and installed as follows:

(a) Braille and tactile components of a sign must be located not less than 1200 mm and not higher than 1600 mm above the floor or ground surface.

(b) Signs with single lines of characters must have the line of tactile characters not less than 1250 mm and not higher than 1350 mm above the floor or ground surface.

(c) Signs identifying rooms containing features or facilities listed in D4D7 must be located—

(i) on the wall on the latch side of the door with the leading edge of the sign located between 50 mm and 300 mm from the architrave; and

(ii) where (i) is not possible, the sign may be placed on the door itself.

(d) Signs identifying a door *required* by E4D5 to be provided with an *exit* sign must be located—

(i) on the side that faces a person seeking egress; and

(ii) on the wall on the latch side of the door with the leading edge of the sign located between 50 mm and 300 mm from the architrave; and

(iii) where (ii) is not possible, the sign may be placed on the door itself.

S15C3 Braille and tactile sign specification

[2019: Spec D3.6: 3]

(1) Tactile characters must be raised or embossed to a height of not less than 1 mm and not more than 1.5 mm.

(2) Title case must be used for all tactile characters, and—

(a) upper case tactile characters must have a height of not less than 15 mm and not more than 55 mm, except that the upper case tactile characters on a sign identifying a door *required* by E4D5 to be provided with an *exit* sign must have a height of not less than 20 mm and not more than 55 mm; and

(b) lower case tactile characters must have a minimum height of 50% of the related upper case characters.

(3) Tactile characters, symbols, and the like, must have rounded edges.

(4) The entire sign, including any frame, must have all edges rounded.

(5) The background, negative space or fill of signs must be of matt or low sheen finish.

(6) The characters, symbols, logos and other features on signs must be matt or low sheen finish.

(7) The minimum letter spacing of tactile characters on signs must be 2 mm.

(8) The minimum word spacing of tactile characters on signs must be 10 mm.

(9) The thickness of letter strokes must be not less than 2 mm and not more than 7 mm.

(10) Tactile text must be left justified, except that single words may be centre justified.

(11) Tactile text must be Arial typeface.

S15C4 Luminance contrast

[2019: Spec D3.6: 4]

The following applies to *luminance contrast*:

(a) The background, negative space, fill of a sign or border with a minimum width of 5 mm must have a *luminance contrast* with the surface on which it is mounted of not less than 30%.

(b) Tactile characters, icons and symbols must have a minimum *luminance contrast* of 30% to the surface on which the characters are mounted.

(c) *Luminance contrasts* must be met under the lighting conditions in which the sign is to be located.

S15C5 Lighting

[2019: Spec D3.6: 5]

Braille and tactile signs must be illuminated to ensure *luminance contrast* requirements are met at all times during which the sign is required to be read.

S15C6 Braille

[2019: Spec D3.6: 6]

The following applies to braille:

(a) Braille must be grade 1 braille (uncontracted) in accordance with the criteria set out by the Australian Braille Authority.

(b) Braille must be raised and domed.

(c) Braille must be located 8 mm below the bottom line of text (not including descenders).

(d) Braille must be left justified.

(e) Where an arrow is used in the tactile sign, a solid arrow must be provided for braille readers.

(f) On signs with multiple lines of text and characters, a semicircular braille locator at the left margin must be horizontally aligned with the first line of braille text.

Specification 16 Accessible water entry/exit from swimming pools

S16C1 Scope

[2019: Spec D3.10: 1]

This Specification sets out the requirements for types of *accessible* water entry/exit for *swimming pools*.

S16C2 Fixed or moveable ramp

[2019: Spec D3.10: 2]

A fixed or moveable ramp must—

(a) have a slip-resistant surface; and

(b) have a maximum gradient of 1:14; and

(c) have handrails complying with the requirements for ramps in AS 1428.1, installed on both sides of the ramp; and

(d) have kerbs in accordance with the requirements for ramps in AS 1428.1; and

(e) extend to a depth of not less than 900 mm and not more than 1100 mm below the stationary water level; and

(f) have landings in accordance with the requirements for ramps in AS 1428.1, with a landing located at the bottom and top of each ramp and a landing must be located at a level between 900 mm and 1100 mm below the stationary water level.

S16C3 Zero depth entry

[2019: Spec D3.10: 3]

A zero depth entry must have—

(a) a slip-resistant surface; and

(b) a maximum gradient of 1:14; and

(c) a single handrail complying with the requirements for handrails in AS 1428.1, from the top of the entry point continuous to the bottom level area; and

(d) a level area—

(i) 1500 mm long for the width of the zero depth entry at the entry point; and

(ii) located at the bottom of the zero depth entry at a level between 900 mm and 1100 mm below the stationary water level.

S16C4 Platform swimming pool lift

[2019: Spec D3.10: 4]

A platform *swimming pool* lift must be—

(a) capable of being operated from the *swimming pool* surround, within the *swimming pool*, and on the platform; and

(b) located where the water depth is not more than 1300 mm; and

(c) designed to withstand a weight capacity of not less than 160 kg and be capable of sustaining a static load of not less than 1.5 times the rated load.

S16C5 Sling-style swimming pool lift

[2019: Spec D3.10: 5]

A sling lift must comply with the following:

(a) A sling lift must be located where the water depth is not more than 1300 mm.

(b) When the sling is in the raised position and in the transfer position, the centreline of the sling must be located over the *swimming pool* surround and not less than 450 mm from the *swimming pool* edge.

(c) The surface of the *swimming pool* surround between the centreline of the sling and the *swimming pool* edge must have a gradient of not more than 1:50 and must be slip-resistant.

(d) A clear space must be provided on the *swimming pool* surround parallel with the *swimming pool* edge on the side remote from the water (see Figure S16C5a and Figure S16C5b) and must—

(i) be not less than 900 mm x 1300 mm; and

(ii) have a gradient of not more than 1:50; and

(iii) have a slip-resistant surface; and

(iv) be located so that the centreline of the space is directly below the lifting point for the sling.

(e) A sling lift must be capable of being operated from the *swimming pool* surround, within the *swimming pool* and from the sling.

(f) A sling must be designed so that it will submerge to a water depth of not less than 500 mm below the stationary water level.

(g) A sling lift must be designed to withstand a weight of not less than 136 kg and be capable of sustaining a static load not less than 1.5 times the rated load.

Figure S16C5a: Clear swimming pool surround space for sling lift in the transfer position — Plan view

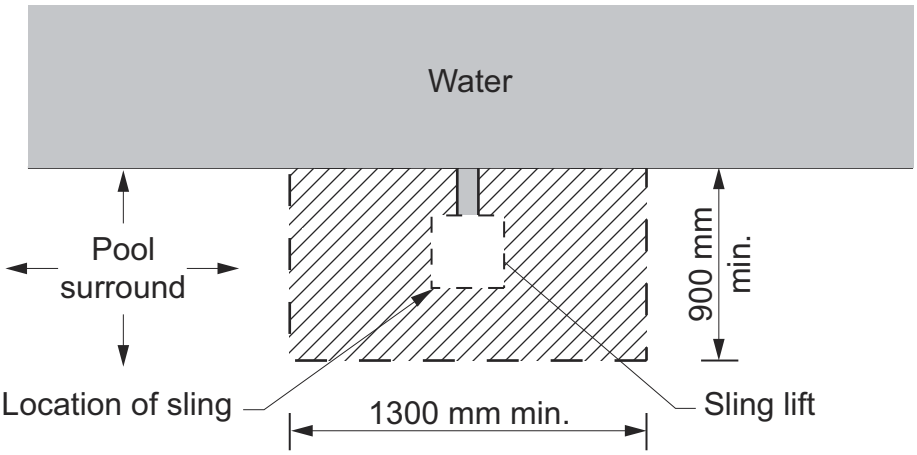

Figure S16C5b: Clear swimming pool surround space for sling lift in the transfer position — Sectional elevation

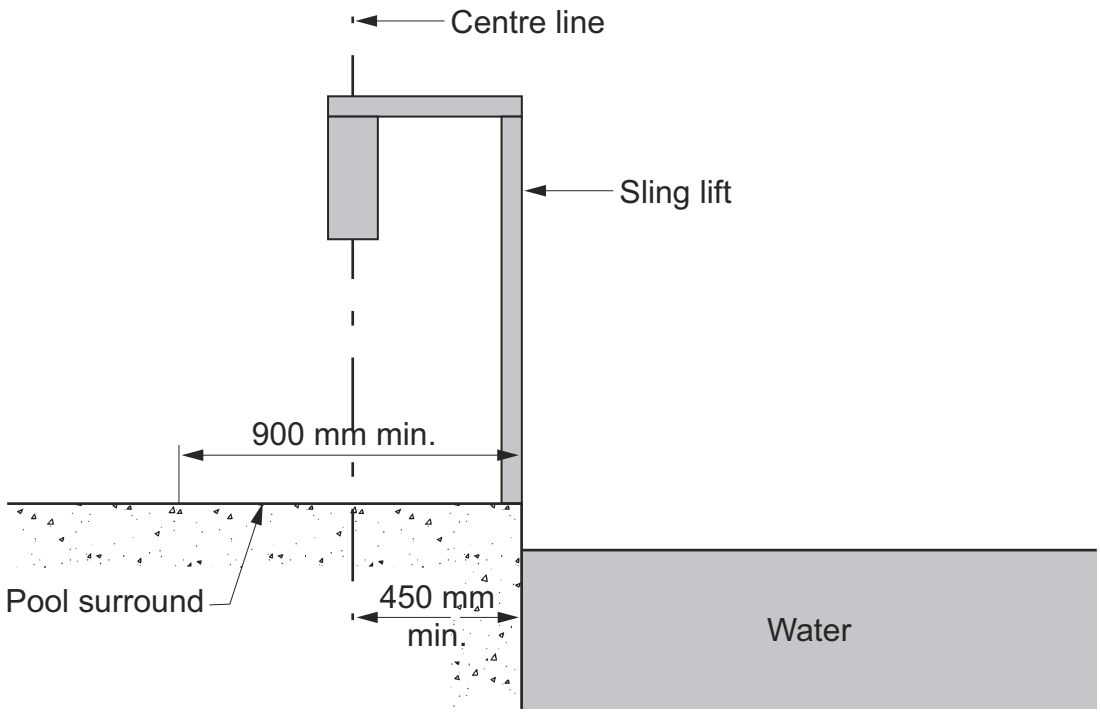

S16C6 Aquatic wheelchair

[2019: Spec D3.10: 6]

An aquatic wheelchair must comply with the following:

(a) The height of the top surface of the seat must be not less than 430 mm.

(b) The seat width must not be not less than 480 mm.

(c) A footrest must be provided.

(d) Armrests must be located on both sides of the seat and must be capable of being moved away from the side of the chair to allow a person to transfer on and off the seat.

Section E Services and equipment

Part E1 Fire fighting equipment

Objectives

E1O1 Objective

Functional Statements

E1F1 Fire-fighting equipment

Performance Requirements

E1P1 Fire hose reels
E1P2 Fire extinguishers
E1P3 Fire hydrants
E1P4 Automatic fire suppression systems
E1P5 Fire-fighting services in buildings under construction
E1P6 Fire control centres

Verification Methods

E1V1 Fire Safety Verification Method

Deemed-to-Satisfy Provisions

E1D1 Deemed-to-Satisfy Provisions
E1D2 Fire hydrants
E1D3 Fire hose reels
E1D4 Sprinklers
E1D5 Where sprinklers are required: all classifications
E1D6 Where sprinklers are required: Class 2 and 3 buildings other than residential care buildings
E1D7 Where sprinklers are required: Class 3 building used as a residential care building
E1D8 Where sprinklers are required: Class 6 building
E1D9 Where sprinklers are required: Class 7a building, other than an open-deck carpark
E1D10 Where sprinklers are required: Class 9a health-care building used as a residential care building and Class 9c buildings
E1D11 Where sprinklers are required: Class 9b buildings
E1D12 Where sprinklers are required: additional requirements
E1D13 Where sprinklers are required: occupancies of excessive hazard
E1D14 Portable fire extinguishers
E1D15 Fire control centres
E1D16 Fire precautions during construction
E1D17 Provision for special hazards

Part E2 Smoke hazard management

Objectives

E2O1 Objective

Functional Statements

E2F1 Adequate safeguards

Performance Requirements

E2P1	Automatic warning for sleeping occupants
E2P2	Safe evacuation routes
Verification Methods	
E2V1	Fire Safety Verification Method
Deemed-to-Satisfy Provisions	
E2D1	Deemed-to-Satisfy Provisions
E2D2	Application of part
E2D3	General requirements
E2D4	Fire-isolated exits
E2D5	Buildings more than 25 m in effective height: Class 2 and 3 buildings and Class 4 part of a building
E2D6	Buildings more than 25 m in effective height: Class 5, 6, 7b, 8 and 9b buildings
E2D7	Buildings more than 25 m in effective height: Class 9a buildings
E2D8	Buildings not more than 25 m in effective height: Class 2 and 3 buildings and Class 4 part of a building
E2D9	Buildings not more than 25 m in effective height: Class 5, 6, 7b, 8 and 9b buildings
E2D10	Buildings not more than 25 m in effective height: large isolated buildings subject to C3D4
E2D11	Buildings not more than 25 m in effective height: Class 9a and 9c buildings
E2D12	Class 7a buildings
E2D13	Basements (other than Class 7a buildings)
E2D14	Class 6 buildings – in fire compartments more than 2000 m^2: Class 6 building (not containing an enclosed common walkway or mall serving more than one Class 6 sole-occupancy unit)
E2D15	Class 6 buildings – in fire compartments more than 2000 m^2: Class 6 building (containing an enclosed common walkway or mall serving more than one Class 6 sole-occupancy unit)
E2D16	Class 9b – assembly buildings: nightclubs, discotheques and the like
E2D17	Class 9b – assembly buildings: exhibition halls
E2D18	Class 9b – assembly buildings: theatres and public halls
E2D19	Class 9b – assembly buildings: theatres and public halls (not listed in E2D18) including lecture theatres and cinema/auditorium complexes
E2D20	Class 9b assembly buildings: other assembly buildings (not listed in E2D16 to E2D19)
E2D21	Provision for special hazards

Part E3 **Lift installations**

Objectives

E3O1	Objective

Functional Statements

E3F1	Passenger lifts
E3F2	Emergency lifts
E3F3	Emergency alerts

Performance Requirements

E3P1 Stretcher facilities
E3P2 Emergency lifts
E3P3 Emergency alerts
E3P4 Lift access for people with a disability

Verification Methods

E3V1 Fire Safety Verification Method
E3V2 Emergency alerts on the use of lifts

Deemed-to-Satisfy Provisions

E3D1 Deemed-to-Satisfy Provisions
E3D2 Lift installations
E3D3 Stretcher facility in lifts
E3D4 Warning against use of lifts in fire
E3D5 Emergency lifts
E3D6 Landings
E3D7 Passenger lift types and their limitations
E3D8 Accessible features required for passenger lifts
E3D9 Fire service controls
E3D10 Residential care buildings
E3D11 Fire service recall control switch
E3D12 Lift car fire service drive control switch

Part E4 Visibility in an emergency, exit signs and warning systems

Objectives

E4O1 Objective

Functional Statements

E4F1 Visibility in an emergency, exit signs and warning systems

Performance Requirements

E4P1 Visibility in an emergency
E4P2 Identification of exits
E4P3 Emergency warning and intercom systems

Verification Methods

E4V1 Emergency lighting
E4V2 Fire Safety Verification Method

Deemed-to-Satisfy Provisions

E4D1 Deemed-to-Satisfy Provisions
E4D2 Emergency lighting requirements
E4D3 Measurement of distance
E4D4 Design and operation of emergency lighting
E4D5 Exit signs
E4D6 Direction signs
E4D7 Class 2 and 3 buildings and Class 4 parts: exemptions
E4D8 Design and operation of exit signs
E4D9 Emergency warning and intercom systems

Specification 17 Fire sprinkler systems

S17C1 Scope

	S17C2	Application of automatic fire sprinkler standards
	S17C3	Separation of sprinklered and non-sprinklered areas
	S17C4	Protection of openings
	S17C5	Quick response sprinklers
	S17C6	Sprinkler valve enclosures
	S17C7	Water supply
	S17C8	Building occupant warning system
	S17C9	Connection to other systems
	S17C10	Anti-tamper devices
	S17C11	Sprinkler systems in carparks
	S17C12	Residential care buildings
	S17C13	Sprinkler systems in lift installations
	S17C14	Early childhood centres
Specification 18	**Class 2 and 3 buildings not more than 25 m in effective height**	
	S18C1	Scope
	S18C2	Application
	S18C3	System requirements
	S18C4	Permitted concessions
Specification 19	**Fire control centres**	
	S19C1	Scope
	S19C2	Application
	S19C3	Purpose and content of fire control centre
	S19C4	Location of fire control centre
	S19C5	Equipment not permitted within a fire control centre
	S19C6	Ambient sound level for a fire control centre
	S19C7	Construction of a fire control room
	S19C8	Protection of openings in a fire control room
	S19C9	Doors to a fire control room
	S19C10	Size and contents of a fire control room
	S19C11	Ventilation and power supply for a fire control room
	S19C12	Sign for a fire control room
	S19C13	Lighting for a fire control room
Specification 20	**Smoke detection and alarm systems**	
	S20C1	Scope
	S20C2	Type of system
	S20C3	Smoke alarm system
	S20C4	Smoke detection system
	S20C5	Combined smoke alarm and smoke detection system
	S20C6	Smoke detection for smoke control systems
	S20C7	Building occupant warning system
	S20C8	System monitoring
Specification 21	**Smoke exhaust systems**	
	S21C1	Scope
	S21C2	Smoke exhaust capacity
	S21C3	Smoke exhaust fans

	S21C4	Smoke reservoirs
	S21C5	Smoke exhaust fan and vent location
	S21C6	Make-up air
	S21C7	Smoke exhaust system control
	S21C8	Smoke detection
Specification 22	**Smoke-and-heat vents**	
	S22C1	Scope
	S22C2	Adoption of AS 2665
	S22C3	Controls
Specification 23	**Residential fire safety systems**	
	S23C1	Scope
	S23C2	Application
	S23C3	General requirements
	S23C4	Local fire indicator panel
	S23C5	Smoke alarms
	S23C6	Signal isolation interface units
	S23C7	Wiring
	S23C8	Connection to monitoring service
	S23C9	Indication at the fire indicator panel
Specification 24	**Lift installations**	
	S24C1	Scope
	S24C2	Lift cars exposed to solar radiation
	S24C3	Lift car emergency lighting
	S24C4	Cooling of lift shaft
	S24C5	Lift foyer access
	S24C6	Emergency access doors in a single enclosed lift shaft
Specification 25	**Photoluminescent exit signs**	
	S25C1	Scope
	S25C2	Application
	S25C3	Illumination
	S25C4	Pictorial elements
	S25C5	Viewing distance
	S25C6	Smoke control systems

Part E1 Fire fighting equipment

Introduction to this Part

This Part focuses on provision of fire-fighting equipment which can enable occupants to fight the fire in its early stages and/or evacuate the building safely, facilitate *fire brigade* intervention and minimise the risk of fire spread between buildings.

Objectives

E1O1 Objective

[2019: EO1]

The Objective of this Part is to—

(a) safeguard occupants from illness or injury while evacuating during a fire; and

(b) provide facilities for occupants and the *fire brigade* to undertake fire-fighting operations; and

(c) prevent the spread of fire between buildings.

Functional Statements

E1F1 Fire-fighting equipment

[2019: EF1.1]

A building is to be provided with fire-fighting equipment to safeguard against fire spread—

(a) to allow occupants time to evacuate safely without being overcome by the effects of fire; and

(b) so that occupants may undertake initial attack on a fire; and

(c) so that the *fire brigade* have the necessary equipment to undertake search, rescue and fire-fighting operations; and

(d) to other parts of the building; and

(e) between buildings.

Performance Requirements

E1P1 Fire hose reels

[2019: EP1.1]

A fire hose reel system must be installed to the degree necessary to allow occupants to safely undertake initial attack on a fire appropriate to—

(a) the size of the *fire compartment*; and

(b) the function or use of the building; and

(c) any other *fire safety systems* installed in the building; and

(d) the *fire hazard*.

E1P2 Fire extinguishers

[2019: EP1.2]

Fire extinguishers must be installed to the degree necessary to allow occupants to undertake initial attack on a fire appropriate to—

(a) the function or use of the building; and

(b) any other *fire safety systems* installed in the building; and

(c) the *fire hazard*.

E1P3 Fire hydrants

[2019: EP1.3]

A fire hydrant system must be provided to the degree necessary to facilitate the needs of the *fire brigade* appropriate to—

(a) fire-fighting operations; and

(b) the *floor area* of the building; and

(c) the *fire hazard*.

Applications

E1P3 only applies to a building where a *fire brigade* is available to attend.

E1P4 Automatic fire suppression systems

[2019: EP1.4]

An *automatic* fire suppression system must be installed to the degree necessary to control the development and spread of fire appropriate to—

(a) the size of the *fire compartment*; and

(b) the function or use of the building; and

(c) the *fire hazard*; and

(d) the height of the building.

E1P5 Fire-fighting services in buildings under construction

[2019: EP1.5]

Suitable means of fire-fighting must be installed to the degree necessary in a building under construction to allow initial fire attack by construction workers and for the *fire brigade* to undertake attack on the fire appropriate to—

(a) the *fire hazard*; and

(b) the height the building has reached during its construction.

E1P6 Fire control centres

[2019: EP1.6]

Suitable facilities must be provided to the degree necessary in a building to co-ordinate *fire brigade* intervention during an emergency appropriate to—

(a) the function or use of the building; and

(b) the *floor area* of the building; and

(c) the height of the building.

TAS E1P7

Verification Methods

E1V1 Fire Safety Verification Method

[2019: EV1.1]

Compliance with E1P1, E1P2, E1P3, E1P4 and E1P6 is verified when a building is designed in accordance with C1V4.

Deemed-to-Satisfy Provisions

TAS E1D1

E1D1 Deemed-to-Satisfy Provisions

[2019: E1.0]

(1) Where a *Deemed-to-Satisfy Solution* is proposed, *Performance Requirements* E1P1 to E1P6 are satisfied by complying with—

(a) E1D2 to E1D17; and

(b) in a building containing an *atrium*, Part G3; and

(c) in a building in an *alpine area*, Part G4; and

(d) for a building containing an *occupiable outdoor area*, Part G6; and

(e) for additional requirements for Class 9b buildings, Part I1; and

(f) for *farm buildings* and *farm sheds*, Part I3.

(2) Where a *Performance Solution* is proposed, the relevant *Performance Requirements* must be determined in accordance with A2G2(3) and A2G4(3) as applicable.

E1D2 Fire hydrants

[2019: E1.3]

(1) A fire hydrant system must be provided to serve a building—

(a) having a total *floor area* greater than 500 m^2; and

(b) where a *fire brigade station* is—

(i) no more than 50 km from the building as measured along roads; and

(ii) equipped with equipment capable of utilising a fire hydrant.

(2) The fire hydrant system must be installed in accordance with AS 2419.1.

(3) Notwithstanding (2), a Class 8 *electricity network substation* need not comply with clause 4.2 of AS 2419.1 if—

(a) it cannot be connected to a town main supply; and

(b) one hour water storage is provided for fire-fighting.

(4) Where internal fire hydrants are provided, they must serve only the *storey* on which they are located except that a *sole-occupancy unit*—

(a) in a Class 2 or 3 building or Class 4 part of a building may be served by a single fire hydrant located at the level of egress from that *sole-occupancy unit*; or

(b) of not more than 2 *storeys* in a Class 5, 6, 7, 8 or 9 building may be served by a single fire hydrant located at the level of egress from that *sole-occupancy unit* provided the fire hydrant can provide coverage to the whole of the *sole-occupancy unit*.

SA E1D2(5)

SA E1D2(6)

SA E1D2(7)

SA E1D2(8)

SA Figure E1D2

SA Table E1D2

E1D3 Fire hose reels

[2019: E1.4]

SA E1D3(1)

(1) E1D3 does not apply to—

(a) a Class 2, 3 or 5 building or Class 4 part of a building; or

(b) a Class 8 *electricity network substation*; or

(c) a Class 9c building; or

(d) classrooms and associated corridors in a primary or secondary *school*.

(2) A fire hose reel system must be provided—

(a) to serve the whole building where one or more internal fire hydrants are installed; or

(b) where internal fire hydrants are not installed, to serve any *fire compartment* with a *floor area* greater than 500 m^2.

(3) The fire hose reel system must—

(a) have fire hose reels installed in accordance with AS 2441; and

(b) provide fire hose reels to serve only the *storey* at which they are located, except a *sole-occupancy unit* of not more than 2 *storeys* in a Class 6, 7, 8 or 9 building may be served by a single fire hose reel located at the level of egress from that *sole-occupancy unit* provided the fire hose reel can provide coverage to the whole of the *sole-occupancy unit*.

(4) Fire hose reels must be located internally, externally or in combination, to achieve the system coverage specified in AS 2441.

(5) In achieving system coverage, one or a combination of the following criteria for individual internally located fire hose reels must be met in determining the layout of any fire hose reel system:

(a) Fire hose reels must be located adjacent to an internal fire hydrant (other than one within a fire-isolated *exit*), except that a fire hose reel need not be located adjacent to every fire hydrant, provided system coverage can be achieved.

(b) Fire hose reels must be located within 4 m of an *exit*, except that a fire hose reel need not be located adjacent to every *exit*, provided system coverage can be achieved.

(c) Where system coverage is not achieved by compliance with (a) and (b), additional fire hose reels may be located in paths of travel to an *exit* to achieve the *required* coverage.

(6) Fire hose reels must be located so that the fire hose will not need to pass through doorways fitted with fire or smoke doors, except—

(a) doorways in walls referred to in C3D6(1)(e) in a Class 9a building and C3D6(3)(d) in a Class 9c building, separating ancillary use areas of high potential *fire hazard*; and

(b) doorways in walls referred to in C3D13 or C3D14 separating equipment or electrical supply systems; and

(c) doorway openings to *shafts* referred to in C4D14.

(7) Where the normal water supply cannot achieve the flow and pressures required by AS 2441, or is unreliable—

(a) a pump; or

(b) water storage facility; or

(c) both a pump and water storage facility,

must be installed to provide the minimum flow and pressures required by clause 6.1 of AS 2441.

E1D4 Sprinklers

[2019: E1.5]

A sprinkler system must—

(a) be installed in a building or part of a building when *required* by E1D5 to E1D13 as applicable; and

(b) comply with Specification 17 and Specification 18 as applicable.

Notes

(1) See Specification 5 for use of sprinklers in Class 2 buildings and *carparks* generally.

(2) See Part E2 for use of sprinklers to satisfy smoke hazard management provisions.

(3) See C2D13 and Specification 5 for use of sprinklers in buildings where C2D13 is applied.

E1D5 Where sprinklers are required: all classifications

[2019: Table E1.5]

Sprinklers are *required* throughout the whole building if any part of the building has an *effective height* of more than 25 m—

(a) including an *open-deck carpark* within a multi-classified building; but

(b) excluding—

(i) an *open-deck carpark* being a separate building; and

(ii) a Class 8 *electricity network substation*, with a *floor area* not more than 200 m^2, located within a multi-classified building.

E1D6 Where sprinklers are required: Class 2 and 3 buildings other than residential care buildings

[2019: Table E1.5]

(1) In a Class 2 or 3 building, or any multi-classified building containing a Class 2 or 3 part, sprinklers are *required* throughout the whole building if any part of the building has—

(a) a *rise in storeys* of 4 or more; and

(b) an *effective height* of not more than 25 m.

(2) The requirements of (1) do not apply to a *residential care building*.

VIC E1D7

E1D7 Where sprinklers are required: Class 3 building used as a residential care building

[2019: Table E1.5]

Sprinklers are *required* throughout a building containing—

(a) a Class 3 building used as a *residential care building*; and

(b) any *fire compartment* containing a Class 3 part used for residential care.

E1D8 Where sprinklers are required: Class 6 building

[2019: Table E1.5]

In a Class 6 building, sprinklers are *required* in *fire compartments* where either of the following apply:

(a) A *floor area* of more than 3 500 m^2.

(b) A *volume* of more than 21 000 m^3.

E1D9 Where sprinklers are required: Class 7a building, other than an open-deck carpark

[2019: Table E1.5]

In a Class 7a building, other than an *open-deck carpark*, sprinklers are *required* in *fire compartments* where more than 40 vehicles are accommodated.

NT E1D10

E1D10 Where sprinklers are required: Class 9a health-care building used as a residential care building and Class 9c buildings

[2019: Table E1.5]

(1) In a Class 9a *health-care building* used as a *residential care building*, sprinklers are *required* throughout the building and in any *fire compartment* containing a Class 9a part used for residential care.

(2) In a Class 9c building, sprinklers are *required* throughout the building and in any *fire compartment* containing a Class 9c part.

E1D11 Where sprinklers are required: Class 9b buildings

[2019: Table E1.5]

(1) In a Class 9b building, other than an *early childhood centre*, see Part I1.

(2) In a Class 9b *early childhood centre* and in a building containing a Class 9b *early childhood centre*, sprinklers are *required* throughout the whole building, including any part of another class.

Exemptions

E1D11(2) does not apply to a Class 9b *early childhood centre*—

(a) wholly within a *storey* that provides direct egress to a road or *open space*; or

(b) with a *rise in storeys* of not more than 2, where the Class 9b *early childhood centre* is the only use in the building.

E1D12 Where sprinklers are required: additional requirements

[2019: Table E1.5]

(1) For sprinkler requirements for *atriums*, see Part G3.

(2) For sprinkler requirements for large isolated buildings, see C3D4.

E1D13 Where sprinklers are required: occupancies of excessive hazard

[2019: Table E1.5 (Note 4)]

(1) In occupancies of excessive hazard, sprinklers are *required* in *fire compartments* where either of the following apply:

(a) A *floor area* of more than 2 000 m^2.

(b) A *volume* of more than 12 000 m^3.

VIC E1D13(2)

(2) For the purposes of (1), occupancies of excessive *fire hazard* comprise buildings which contain—

(a) hazardous processes or storage including the following:

(i) Aircraft hangars.

(ii) Cane furnishing manufacture, processing and storage.

(iii) Fire-lighter and fireworks manufacture and warehousing.

(iv) Foam plastic and foam plastic goods manufacture, processing and warehousing e.g. furniture factory.

(v) Hydrocarbon based sheet product, manufacture, processing and warehousing e.g. vinyl floor coverings.

(vi) Woodwool and other flammable loose fibrous material manufacture.

(b) combustible goods with an aggregate *volume* exceeding 1000 m^3 and stored to a height greater than 4 m including the following:

(i) Aerosol packs with flammable contents.

(ii) Carpets and clothing.

(iii) Electrical appliances.

(iv) Combustible compressed fibreboards (low and high density) and plywoods.

(v) Combustible cartons, irrespective of content.

(vi) Esparto and other fibrous combustible material.

(vii) Furniture including timber, cane and composite, where foamed rubber or plastics are incorporated.

(viii) Paper storage (all forms of new or waste) e.g. bales, sheet, horizontal or vertical rolls, waxed coated or processed.

(ix) Textiles raw and finished, e.g. rolled cloth, clothing and manchester.

(x) Timber storage including sheets, planks, boards, joists and cut sizes.

(xi) Vinyl, plastic, foamed plastic, rubber and other combustible sheets, offcuts and random pieces and rolled material storage, e.g. carpet, tar paper, linoleum, wood veneer and foam mattresses.

(xii) All materials having wrappings or preformed containers of foamed plastics.

E1D14 Portable fire extinguishers

[2019: E1.6 and Table E1.6]

(1) Portable fire extinguishers must be—

(a) provided as listed in (3) and (4); and

(b) for a Class 2, 3 or 5 building or Class 4 part of a building, provided—

(i) to serve the whole Class 2, 3 or 5 building or Class 4 part of a building where one or more internal fire hydrants are installed; or

(ii) where internal fire hydrants are not installed, to serve any *fire compartment* with a *floor area* greater than 500 m^2, and for the purposes of this clause, a *sole-occupancy unit* in a Class 2 or 3 building or Class 4 part of a building is considered to be a *fire compartment*; and

(c) subject to (2), selected, located and distributed in accordance with Sections 1, 2, 3 and 4 of AS 2444.

(2) Portable fire extinguishers provided in a Class 2 or 3 building or Class 4 part of a building must be—

(a) an ABE type fire extinguisher; and

(b) a minimum size of 2.5 kg; and

(c) distributed outside a *sole-occupancy unit*—

(i) to serve only the *storey* at which they are located; and

(ii) so that the travel distance from the entrance doorway of any *sole-occupancy unit* to the nearest fire extinguisher is not more than 10 m.

(3) In Class 2 to 9 buildings (except within *sole-occupancy units* of a Class 9c building), portable fire extinguishers must be provided as follows:

(a) To cover Class AE or E fire risks associated with emergency services switchboards.

(b) To cover Class F fire risks involving cooking oils and fats in kitchens.

(c) To cover Class B fire risks in locations where flammable liquids in excess of 50 litres are stored or used (not including that held in fuel tanks of vehicles).

(d) To cover Class A fire risks in normally occupied *fire compartments* less than 500 m^2 not provided with fire hose reels (excluding *open-deck carparks*).

(e) To cover Class A fire risks in classrooms and associated corridors in primary and secondary schools not provided with fire hose reels.

(f) To cover Class A fire risks associated with a Class 2, 3 or 5 building or Class 4 part of a building.

(4) In addition to the requirements of (3), portable fire extinguishers must be provided to cover Class A and E fire risks in the following occupancies in buildings, or parts of a building:

(a) A Class 9a *health-care building*, including a Class 9a building used as a *residential care building*.

(b) Class 3 parts of detention and correctional occupancies.

(c) Class 3 accommodation for children, aged persons and people with disabilities, including a Class 3 building used as a *residential care building*.

(d) A Class 9c building.

(5) For the purposes of (3) and (4):

(a) Fire risks are defined in accordance with AS 2444.

(b) An emergency services switchboard is one which sustains emergency equipment operating in the emergency mode.

(c) Additional extinguishers may be required to cover fire risks in relation to special hazards provided for in E1D17.

(d) The fire risks in a Class 2 or 3 building or Class 4 part of a building must include risks within any *sole-occupancy units*, however portable fire extinguishers are not required to be located within a *sole-occupancy unit* unless the *sole-occupancy unit* has a *floor area* greater than 500 m^2.

(6) For the purposes of (4), where applicable, a Class E fire extinguisher need only be located at each nurses' station, supervisors' station or the like.

SA E1D14(7)

SA E1D14(8)

E1D15 Fire control centres

[2019: E1.8]

A fire control centre facility in accordance with Specification 19 must be provided for—

(a) a building with an *effective height* of more than 25 m; and

(b) a Class 6, 7, 8 or 9 building with a total *floor area* of more than 18 000 m^2.

E1D16 Fire precautions during construction

[2019: E1.9]

In a building under construction—

(a) not less than one fire extinguisher to suit Class A, B and C fires and electrical fires must be provided at all times on each *storey* adjacent to each *required exit* or temporary stairway or *exit*; and

(b) after the building has reached an *effective height* of 12 m—

(i) the *required* fire hydrants and fire hose reels must be operational in at least every *storey* that is covered by the roof or the floor structure above, except the 2 uppermost *storeys*; and

(ii) any *required* booster connections must be installed.

E1D17 Provision for special hazards

[2019: E1.10]

Suitable additional provision must be made if special problems of fighting fire could arise because of—

(a) the nature or quantity of materials stored, displayed or used in a building or on the allotment; or

(b) the location of the building in relation to a water supply for fire-fighting purposes.

TAS E1D17

Explanatory Information: Cross-volume considerations

Part B4 of NCC Volume Three sets out the requirements for access for maintenance of fire-fighting water services.

Part E2 Smoke hazard management

Introduction to this Part

This Part is intended to reduce the risk of injury or loss of life for occupants due to the effects of smoke, including inhalation, if a fire occurs in a building. It provides for *automatic* warning of the presence of smoke or fire, and measures to ensure conditions within evacuation routes remain tenable long enough for occupants evacuate safely and to facilitate *fire brigade* intervention.

Objectives

E2O1 Objective

[2019: EO2]

The Objective of this Part is to—

(a) safeguard occupants from illness or injury by warning them of a fire so that they may safely evacuate; and

(b) safeguard occupants from illness or injury while evacuating during a fire.

Functional Statements

E2F1 Adequate safeguards

[2019: EF2.1]

A building is to be provided with safeguards so that—

(a) occupants are warned of a fire in the building so that they may safely evacuate; and

(b) occupants have time to safely evacuate before the environment in any *evacuation route* becomes untenable from the effects of fire.

Performance Requirements

E2P1 Automatic warning for sleeping occupants

[2019: EP2.1]

In a building providing sleeping accommodation, occupants must be provided with *automatic* warning on the detection of smoke so they may evacuate in the event of a fire to a *safe place*.

Applications

E2P1 only applies to a Class 2, 3, 9a or 9c building or Class 4 part of a building.

E2P2 Safe evacuation routes

[2019: EP2.2]

(1) In the event of a fire in a building the conditions in any *evacuation route* must be maintained for the period of time occupants take to evacuate the part of the building so that—

(a) the temperature will not endanger human life; and

(b) the level of visibility will enable the *evacuation route* to be determined; and

(c) the level of toxicity will not endanger human life.

(2) The period of time occupants take to evacuate referred to in (1) must be appropriate to—

(a) the number, mobility and other characteristics of the occupants; and

(b) the function or use of the building; and

(c) the travel distance and other characteristics of the building; and

(d) the *fire load*; and

(e) the potential *fire intensity*; and

(f) the *fire hazard*; and

(g) any active *fire safety systems* installed in the building; and

(h) *fire brigade* intervention.

Limitations

E2P2 does not apply to an *open-deck carpark* or *open spectator stand*.

Verification Methods

E2V1 Fire Safety Verification Method

[2019: EV2.1]

Compliance with E2P1 and E2P2 is verified when a building is designed in accordance with C1V4.

Deemed-to-Satisfy Provisions

E2D1 Deemed-to-Satisfy Provisions

[2019: E2.0]

SA E2D1(1)

(1) Where a *Deemed-to-Satisfy Solution* is proposed, *Performance Requirements* E2P1 and E2P2 are satisfied by complying with—

(a) E2D2 to E2D21; and

(b) in a building containing an *atrium*, Part G3; and

(c) in a building in an *alpine area*, Part G4; and

(d) for additional requirements for Class 9b buildings, Part I1.

(2) Where a *Performance Solution* is proposed, the relevant *Performance Requirements* must be determined in accordance with A2G2(3) and A2G4(3) as applicable.

E2D2 Application of part

[2019: E2.1]

(1) The *Deemed-to-Satisfy Provisions* of this Part do not apply to—

(a) an *open-deck carpark*; or

(b) an *open spectator stand*; or

(c) a Class 8 *electricity network substation* with a *floor area* not more than 200 m^2, located within a multi-classified building.

(2) In addition to the *Deemed-to-Satisfy Provisions* of E2D3 to E2D13, the following specific *Deemed-to-Satisfy Provisions* apply to the following Class 6 and Class 9b buildings:

(a) For Class 6 buildings, in *fire compartments* more than 2000 m^2—

(i) not containing an enclosed common walkway or mall serving more than one Class 6 *sole-occupancy unit* — must comply with E2D14; or

(ii) containing an enclosed common walkway or mall serving more than one Class 6 *sole-occupancy unit* — must comply with E2D15.

(b) For Class 9b *assembly buildings*—

(i) nightclubs, discotheques and the like — must comply with E2D16; and

(ii) exhibition halls — must comply with E2D17; and

(iii) theatres and public halls — must comply with E2D18; and

(iv) theatres and public halls (not covered by E2D18) including lecture theatres and cinema/auditorium complexes — must comply with E2D19; and

(v) other *assembly buildings* (not listed in (i) to (iv)) excluding *schools* — must comply with E2D20.

(3) The smoke exhaust and *smoke-and-heat vent* provisions of this Part do not apply to any area not used by occupants for an extended period of time such as a storeroom with a *floor area* less than 30 m^2, *sanitary compartment*, plant room or the like.

E2D3 General requirements

[2019: E2.2]

(1) An air-handling system which does not form part of a smoke hazard management system in accordance with E2D4 to E2D20 and which recycles air from one *fire compartment* to another *fire compartment* or operates in a manner that may unduly contribute to the spread of smoke from one *fire compartment* to another *fire compartment* must, subject to (2), be designed and installed—

(a) to operate as a smoke control system in accordance with AS 1668.1; or

(b) such that it—

(i) incorporates smoke dampers where the air-handling ducts penetrate any elements separating the *fire compartments* served; and

(ii) is arranged such that the air-handling system is shut down and the smoke dampers are activated to close *automatically* by smoke detectors complying with clause 7.5 of AS 1670.1.

(2) For the purposes of (1), each *sole-occupancy unit* in a Class 2 or 3 building is treated as a separate *fire compartment*.

(3) Miscellaneous air-handling systems covered by Sections 5 and 6 of AS 1668.1 serving more than one *fire compartment* (other than a *carpark* ventilation system) and not forming part of a smoke hazard management system must comply with these Sections of the Standard.

(4) A smoke detection system must be installed in accordance with S20C6 to operate AS 1668.1 systems that are provided for zone pressurisation and *automatic* air pressurisation for fire-isolated *exits*.

E2D4 Fire-isolated exits

[2019: Table E2.2a]

(1) A part of a building listed in (2) must be provided with—

(a) an *automatic* air pressurisation system for fire-isolated *exits* in accordance with AS 1668.1; or

(b) open access ramps or balconies in accordance with D3D6.

(2) The requirements of (1) apply to—

(a) a *required fire-isolated stairway*, including any associated *fire-isolated passageway* or *fire-isolated ramp* serving—

(i) any *storey* above an *effective height* of 25 m; or

(ii) more than 2 below ground *storeys*, not counted in the *rise in storeys* in accordance with C2D3; or

(iii) an *atrium* to which Part G3 applies; or

(iv) a Class 9a building with a *rise in storeys* of more than 2; or

(v) a Class 9c building with a *rise in storeys* of more than 2; or

(vi) a Class 3 building used as a *residential care building* with a *rise in storeys* of more than 2; and

(b) a *required fire-isolated passageway* or *fire-isolated ramp* with a length of travel more than 60 m to a road or *open space*.

(3) An *automatic* air pressurisation system for a fire-isolated *exit* must serve the entire *exit*.

Notes

Refer to D2D12(4) for pressurisation of a fire-isolated *exit* having more than 2 access doorways from within the same *storey*.

E2D5 Buildings more than 25 m in effective height: Class 2 and 3 buildings and Class 4 part of a building

[2019: Table E2.2a]

An *automatic* smoke detection and alarm system complying with Specification 20 must be provided to the following:

(a) A Class 2 or 3 building which is more than 25 m in *effective height*.

(b) A Class 2 or 3 part of a building, or a Class 4 part of a building, in a building which is more than 25 m in *effective height*.

Notes

Refer to C3D15 for division of *public corridors* greater than 40 m in length.

E2D6 Buildings more than 25 m in effective height: Class 5, 6, 7b, 8 and 9b buildings

[2019: Table E2.2a]

(1) A Class 5, 6, 7b, 8 or 9b building or part of a building must be provided with a zone pressurisation system between vertically separated *fire compartments* in accordance with AS 1668.1, if the building is more than 25 m in *effective height*.

(2) The requirements of (1) do not apply to a building that has a *fire compartment* containing a Class 5, 6, 7b, 8 or 9b part (or a combination of these classes in the same *fire compartment*) where there is only one *fire compartment* containing these classifications in an otherwise Class 2, 3, 9a or 9c building.

(3) For the purposes of (1), 'vertically separated *fire compartments*' are *fire compartments* above and below each other, and not *fire compartments* within the same *storey*.

Notes

Refer to E2D14 to E2D20 for specific provisions applicable to a Class 6 (in a *fire compartment* having a *floor area* of more than 2000 m^2) and Class 9b building or part of a building.

E2D7 Buildings more than 25 m in effective height: Class 9a buildings

[2019: Table E2.2a]

(1) A Class 9a building must be provided with—

(a) an *automatic* smoke detection and alarm system complying with Specification 20; and

(b) a zone pressurisation system between vertically separated *fire compartments* in accordance with AS 1668.1,

if the building is more than 25 m in *effective height*.

(2) For the purposes of (1), 'vertically separated *fire compartments*' are *fire compartments* above and below each other, and not *fire compartments* within the same *storey*.

Notes

A building more than 25 m in *effective height* requires a sprinkler system under E1D4.

E2D8 Buildings not more than 25 m in effective height: Class 2 and 3 buildings and Class 4 part of a building

[2019: Table E2.2a]

In a Class 2 and 3 building or part of a building, or Class 4 part of a building, if the building is not more than 25 m in *effective height*—

(a) it must be provided with an *automatic* smoke detection and alarm system complying with Specification 20; and

(b) where a *required fire-isolated stairway* serving the Class 2 or 3 parts also serves one or more *storeys* of Class 5, 6, 7 (other than an *open-deck carpark*), 8 or 9b parts—

(i) the *fire-isolated stairway*, including any associated *fire-isolated passageway* or *fire-isolated ramp*, must be provided with an *automatic* air pressurisation system for fire-isolated *exits* in accordance with AS 1668.1; or

(ii) the Class 5, 6, 7 (other than an *open-deck carpark*), 8 and 9b parts must be provided with—

(A) an *automatic* smoke detection and alarm system complying with Specification 20; or

(B) a sprinkler system (other than a FPAA101D or FPAA101H system) complying with Specification 17; and

(c) where a *required fire-isolated stairway* serving the Class 4 part also serves one or more *storeys* of Class 5, 6, 7 (other than an *open-deck carpark*), 8 or 9b parts—

(i) a system complying with (b)(i) or (b)(ii) must be installed; or

(ii) a smoke alarm or detector system complying with Specification 20 must be provided except that alarms or detectors need only be installed adjacent to each doorway into each *fire-isolated stairway* (set back horizontally from the doorway by a distance of not more than 1.5 m) to initiate a building occupant warning system for the Class 4 part.

Notes

(1) Refer to C3D15 for division of *public corridors* greater than 40 m in length.

(2) Refer to E2D14 to E2D20 for specific provisions applicable to a Class 6 (in a *fire compartment* having a *floor area* of more than 2000 m^2) and Class 9b building or part of a building.

E2D9 Buildings not more than 25 m in effective height: Class 5, 6, 7b, 8 and 9b buildings

[2019: Table E2.2a]

(1) A building not more than 25 m in *effective height* that—

(a) is a Class 5 or 9b *school* building or part of a building having a *rise in storeys* of more than 3; or

(b) is a Class 6, 7b, 8 or 9b building (other than a *school*) or part of a building having a *rise in storeys* of more than 2; or

(c) has a *rise in storeys* of more than 2 and contains—

(i) a Class 5 or 9b *school* part; and

(ii) a Class 6, 7b, 8 or 9b (other than a *school*) part,

must meet the requirements of (2).

(2) A building referred to in (1) must be provided with—

(a) in each *required fire-isolated stairway*, including any associated *fire-isolated passageway* or *fire-isolated ramp*, an *automatic* air pressurisation system for fire-isolated *exits* in accordance with AS 1668.1; or

(b) a zone pressurisation system between vertically separated *fire compartments* in accordance with AS 1668.1, if the building has more than one *fire compartment*; or

(c) an *automatic* smoke detection and alarm system complying with Specification 20; or

(d) a sprinkler system (other than a FPAA101D or FPAA101H system) complying with Specification 17.

(3) For the purposes of (2), vertically separated *fire compartments* are *fire compartments* above and below each other, and not *fire compartments* within the same *storey*.

NSW E2D10

E2D10 Buildings not more than 25 m in effective height: large isolated buildings subject to C3D4

[2019: Table E2.2a]

(1) In a Class 7 or 8 building of not more than 25 m in *effective height*, and which does not exceed 18 000 m^2 in *floor area* nor exceed 108 000 m^3 in *volume*, the building must be provided with—

(a) a sprinkler system complying with Specification 17, and provided with perimeter vehicular access complying with C3D5(2); or

(b) an *automatic* fire detection and alarm system complying with AS 1670.1 and monitored in accordance with S20C8; or

(c) an *automatic* smoke exhaust system in accordance with Specification 21; or

(d) *automatic smoke-and-heat vents* in accordance with Specification 22; or

(e) natural smoke venting, with ventilation openings distributed as evenly as practicable and comprising permanent openings at roof level with a free area not less than 1.5% of *floor area* and low level openings which may be permanent or readily openable with a free area not less than 1.5% of *floor area*.

(2) In a Class 5, 6, 7, 8 or 9 building of not more than 25 m in *effective height*, and which exceeds 18 000 m^2 in *floor area* or 108 000 m^3 in *volume*, the building must be provided with—

(a) if the ceiling height of the *fire compartment* is not more than 12 m—

(i) an *automatic* smoke exhaust system in accordance with Specification 21; or

(ii) *automatic smoke-and-heat vents* in accordance with Specification 22; or

(b) if the ceiling height of the *fire compartment* is more than 12 m, an *automatic* smoke exhaust system in accordance with Specification 21.

(3) For the purposes of (1) and (2), reference to 'the building' being provided with specified measures, means to the nominated classes within the building.

Notes

(1) Refer to E2D14 to E2D20 for specific provisions applicable to a Class 6 (in a *fire compartment* having a *floor area* of more than 2000 m^2) and Class 9b building or part of a building.

(2) Refer to E2D5 and E2D8 where a Class 5, 6, 7b, 8 and 9b building contains a Class 2, 3 or 4 part.

E2D11 Buildings not more than 25 m in effective height: Class 9a and 9c buildings

[2019: Table E2.2a]

(1) A Class 9a *health-care building* or a Class 9c building, or a building containing a part thereof, which is not more than 25 m in *effective height*, must be provided throughout with—

(a) an *automatic* smoke detection and alarm system complying with Specification 20; and

(b) *automatic* shutdown of any air-handling system which does not form part of a zone pressurisation system (other than individual room units with a capacity not more than 1000 L/s, systems serving critical treatment areas and miscellaneous exhaust air systems installed in accordance with Sections 5 and 6 of AS 1668.1) on the activation of—

(i) smoke detectors installed in accordance with (a); and

(ii) any other installed fire detection and alarm system including a sprinkler system complying with Specification 17; and

(c) in a building having a *rise in storeys* of more than 2 and not more than 25 m *effective height* (not being a Class 9c building)—

(i) a zone pressurisation system between vertically separated *fire compartments* in accordance with AS 1668.1; or

(ii) a sprinkler system complying with Specification 17 throughout with residential sprinkler heads in *patient care areas*.

(2) For the purposes of (1), 'vertically separated *fire compartments*' are *fire compartments* above and below each other, and not *fire compartments* within the same *storey*.

Notes

Refer to S11C2 for the provisions for smoke dampers.

E2D12 Class 7a buildings

[2019: Table E2.2a]

A Class 7a building, including a basement, provided with a mechanical ventilation system in accordance with AS 1668.2, must comply with clause 5.5 of AS 1668.1.

E2D13 Basements (other than Class 7a buildings)

[2019: Table E2.2a]

(1) A basement, other than a Class 7a basement, not counted in the *rise in storeys* in accordance with C2D3, must—

(a) comply with measures in accordance with this Part applicable to the building generally; and

(b) where the basement has a total *floor area* of more than 2000 m^2, be provided with—

(i) if not more than 2 below ground *storeys*—

(A) a zone pressurisation system between vertically separated *fire compartments* in accordance with AS 1668.1, if the basement has more than one *fire compartment*; or

(B) an *automatic* smoke detection and alarm system complying with Specification 20; or

(C) a sprinkler system (other than a FPAA101D or FPAA101H system) complying with Specification 17; or

(ii) if more than 2 below ground *storeys*, a sprinkler system (other than a FPAA101D or FPAA101H system) complying with Specification 17.

(2) For the purposes of (1), 'vertically separated *fire compartments*' are *fire compartments* above and below each other, and not *fire compartments* within the same *storey*.

Notes

(1) Refer to E2D14 to E2D20 for specific provisions applicable to a Class 6 (in a *fire compartment* having a *floor area* of more than 2000 m^2) and Class 9b building or part of a building.

(2) Basements with more than 3 below ground *storeys* or containing Class 6 or 9b occupancies with a large number of occupants may require special consideration in accordance with E2D21.

E2D14 Class 6 buildings – in fire compartments more than 2000 m²: Class 6 building (not containing an enclosed common walkway or mall serving more than one Class 6 sole-occupancy unit)

[2019: Table E2.2b]

(1) This clause applies to a Class 6 building not containing an enclosed common walkway or mall serving more than one Class 6 *sole-occupancy unit*, except for—

(a) a Class 6 *sole-occupancy unit* that—

(i) has a *floor area* of not more than 2000 m²; and

(ii) is single *storey* with a main public entrance opening to a road or *open space*; and

(iii) is separated from other parts of the *fire compartment* by construction, including openings, penetrations and junctions with other building elements, that prevents the free passage of smoke; and

(b) parts of any other classification that are smoke separated from a Class 6 part by construction complying with (a)(iii).

(2) Where the *floor area* of a Class 6 part of a *fire compartment* referred to in (1) is more than 2000 m², the *fire compartment* must be provided with—

(a) an *automatic* smoke exhaust system complying with Specification 21; or

(b) if the building is single *storey*, *automatic smoke-and-heat vents* complying with Specification 22; or

(c) if the *floor area* of the *fire compartment* is not more than 3500 m² and the building—

(i) is single *storey*, an *automatic* smoke detection and alarm system complying with Specification 20; or

(ii) has a *rise in storeys* of not more than 2, a sprinkler system (other than a FPAA101D or FPAA101H system) complying with Specification 17.

E2D15 Class 6 buildings – in fire compartments more than 2000 m²: Class 6 building (containing an enclosed common walkway or mall serving more than one Class 6 sole-occupancy unit)

[2019: Table E2.2b]

(1) This clause applies to a Class 6 building containing an enclosed common walkway or mall serving more than one Class 6 *sole-occupancy unit*, except for—

(a) a Class 6 *sole-occupancy unit* that—

(i) opens onto the enclosed common walkway or mall if the Class 6 *sole-occupancy unit* has a *floor area* of not more than 1000 m²; or

(ii) does not open onto the enclosed common walkway or mall if the Class 6 *sole-occupancy unit*—

(A) has a *floor area* of not more than 2000 m²; and

(B) is single *storey* with a main entrance opening to a road or *open space*; and

(C) is separated from other parts of the *fire compartment* by construction, including openings, penetrations and junctions with other building elements, that prevents the free passage of smoke; and

(b) parts of any other classification that are smoke separated from a Class 6 part by construction complying with (a)(ii)(C).

(2) Where the *floor area* of a Class 6 part of a *fire compartment* referred to in (1) is more than 2000 m², the *fire compartment*, including the enclosed common walkway or mall, must be provided with—

(a) an *automatic* smoke exhaust system complying with Specification 21; or

(b) if the building is single *storey*, *automatic smoke-and-heat vents* complying with Specification 22; or

(c) if the *floor area* of the *fire compartment* is not more than 3500 m² and the building has a *rise in storeys* of not more than 2, a sprinkler system (other than a FPAA101D or FPAA101H system) complying with Specification 17.

Notes

A *fire compartment* having a *floor area* of more than 3500 m^2 in a Class 6 building requires a sprinkler system under E1D4.

NSW E2D16

E2D16 Class 9b – assembly buildings: nightclubs, discotheques and the like

[2019: Table E2.2b]

A Class 9b *assembly building* which is a nightclub, discotheque or the like must be provided with—

(a) *automatic* shutdown of any air-handling system (other than miscellaneous exhaust air systems installed in accordance with Sections 5 and 6 of AS 1668.1) which does not form part of the smoke hazard management system, on the activation of—

(i) smoke detectors installed complying with S20C6; and

(ii) any other installed fire detection and alarm system, including a sprinkler system complying with Specification 17; and

(b) at least one of the following:

(i) An *automatic* smoke exhaust system complying with Specification 21.

(ii) If the building is single *storey*, *automatic smoke-and-heat vents* complying with Specification 22.

(iii) A sprinkler system (other than a FPAA101D or FPAA101H system) complying with Specification 17 with quick response sprinkler heads.

NSW E2D17

E2D17 Class 9b – assembly buildings: exhibition halls

[2019: Table E2.2b]

A Class 9b *assembly building* which is an exhibition hall must be provided with—

(a) *automatic* shutdown of any air-handling system (other than miscellaneous exhaust air systems installed in accordance with Sections 5 and 6 of AS 1668.1) which does not form part of the smoke hazard management system, on the activation of—

(i) smoke detectors installed complying with Specification 20; and

(ii) any other installed fire detection and alarm system, including a sprinkler system complying with Specification 17; and

(b) where the *floor area* is more than 2000 m^2 and not more than 3500 m^2—

(i) an *automatic* smoke exhaust system complying with Specification 21; or

(ii) if the building is single *storey*, *automatic smoke-and-heat vents* complying with Specification 22; or

(iii) a sprinkler system (other than a FPAA101D or FPAA101H system) complying with Specification 17; and

(c) where the *floor area* is more than 3500 m^2, a sprinkler system (other than a FPAA101D or FPAA101H system) complying with Specification 17 and—

(i) an *automatic* smoke exhaust system complying with Specification 21; or

(ii) *automatic smoke-and-heat vents* complying with Specification 22, if the building is single *storey*.

NSW E2D18

E2D18 Class 9b – assembly buildings: theatres and public halls

[2019: Table E2.2b]

(1) This clause applies to a Class 9b *assembly building* where the building or part of the building is used as a theatre or public hall which—

(a) is a *school* assembly, church or community hall, and has a *stage* and any *backstage* area with a total *floor area* of more than 300 m^2; or

(b) is not a *school* assembly, church or community hall, and has a *stage* and any *backstage* area with a total *floor area* of more than 200 m^2; or

(c) has a *stage* with an associated rigging loft.

(2) A building or part of a building referred to in (1) must be provided with—

(a) an *automatic* smoke exhaust system complying with Specification 21; or

(b) if the building is single *storey*, *automatic smoke-and-heat vents* complying with Specification 22.

NSW E2D19

E2D19 Class 9b – assembly buildings: theatres and public halls (not listed in E2D18) including lecture theatres and cinema/auditorium complexes

[2019: Table E2.2b]

(1) This clause applies to a Class 9b *assembly building* where the building or part of the building is used as a theatre or public hall not listed in E2D18 and includes lecture theatres and cinema/auditorium complexes.

(2) A building or part of a building referred to in (1)—

(a) must be provided with *automatic* shutdown of any air-handling system (other than miscellaneous exhaust air systems installed in accordance with Sections 5 and 6 of AS 1668.1) which does not form part of the smoke hazard management system, on the activation of—

(i) smoke detectors installed complying with Specification 20; and

(ii) any other installed fire detection and alarm system, including a sprinkler system complying with Specification 17; and

(b) other than in the case of a *school* lecture theatre, where the *floor area* of the *fire compartment* is more than 2000 m^2—

(i) an *automatic* smoke exhaust system complying with Specification 21; or

(ii) if the building is single *storey*, *automatic smoke-and-heat vents* complying with Specification 22; or

(iii) if the *floor area* of the *fire compartment* is not more than 5000 m^2 and the building has a *rise in storeys* of not more than 2—

(A) an *automatic* smoke detection and alarm system complying with Specification 20; or

(B) a sprinkler system (other than a FPAA101D or FPAA101H system) complying with Specification 17.

NSW E2D20

E2D20 Class 9b assembly buildings: other assembly buildings (not listed in E2D16 to E2D19)

[2019: Table E2.2b]

(1) The requirements of (2)—

(a) apply to a Class 9b *assembly building* where the building or part of the building is used for a purpose other than—

(i) as described in E2D16 to E2D19; or

(ii) a *school*; and

(b) do not apply to—

(i) sporting complexes (including sports halls, gymnasiums, *swimming pools*, ice and roller rinks, and the like) other than an indoor sports stadium with total spectator seating for more than 1000; or

(ii) churches and other places used solely for religious worship.

(2) Each *fire compartment*, other than one in a building referred to in (1)(b), having a *floor area* of more than 2000 m^2

must be provided with—

(a) an *automatic* smoke exhaust system complying with Specification 21; or

(b) if the building is single *storey*, *automatic smoke-and-heat vents* complying with Specification 22; or

(c) if the *floor area* of the *fire compartment* is not more than 5000 m^2 and the building has a *rise in storeys* of not more than 2—

(i) an *automatic* smoke detection and alarm system complying with Specification 20; or

(ii) a sprinkler system (other than a FPAA101D or FPAA101H system) complying with Specification 17.

(3) A building containing a Class 9b *early childhood centre* must be provided with an *automatic* smoke detection and alarm system complying with Specification 20 throughout the whole building, including any part of another class.

E2D21 Provision for special hazards

[2019: E2.3]

Additional smoke hazard management measures may be necessary due to the—

(a) special characteristics of the building; or

(b) special function or use of the building; or

(c) special type or quantity of materials stored, displayed or used in a building; or

(d) special mix of classifications within a building or *fire compartment*,

which are not addressed in E2D4 to E2D20.

SA E2D22

Part E3 Lift installations

Introduction to this Part

This Part is intended to ensure that lifts are safe to use, including by people with a disability and emergency services personnel. This Part is also intended to ensure occupants know when lifts should not be used (e.g. during a fire) and, in the event of lift malfunction, for conditions in a lift car to remain tenable and occupants to able to call for assistance.

Objectives

E3O1 Objective

[2019: EO3]

The Objective of this Part is to—

(a) facilitate the safe movement of occupants; and

(b) facilitate access for emergency services personnel to carry out emergency procedures and assist in the evacuation of occupants.

Functional Statements

E3F1 Passenger lifts

[2019: EF3.1]

Where a passenger lift is provided, it is to facilitate safe and easy—

(a) movement for occupants with a disability; and

(b) evacuation of occupants, who due to illness or injury need stretcher assistance.

E3F2 Emergency lifts

[2019: EF3.2]

A building is to be provided with one or more passenger lifts to facilitate—

(a) the safe access for emergency services personnel; and

(b) safe and easy evacuation of occupants who due to illness, injury or disability cannot use stairways in the event of an emergency.

Applications

E3F2 only applies to—

(a) a building with an *effective height* of more than 25 m; and

(b) a Class 9a building in which *patient care area* are located above a level with direct access to a road or *open space*.

E3F3 Emergency alerts

[2019: EF3.3]

A building having a passenger lift is to be provided with measures to alert occupants about the use of the lift in an emergency.

Performance Requirements

E3P1 Stretcher facilities

[2019: EP3.1]

Stretcher facilities must be provided, to the degree necessary—

(a) in at least one emergency lift *required* by E3P2; or

(b) where an emergency lift is not *required* and a passenger lift is provided, in at least one lift, to serve each floor in the building served by the passenger lift.

E3P2 Emergency lifts

[2019: EP3.2]

One or more passenger lifts fitted as emergency lifts to serve each floor served by the lifts in a building must be installed to facilitate the activities of the *fire brigade* and other emergency services personnel.

Applications

E3P2 only applies to—

(a) a building with an *effective height* of more than 25 m; and

(b) a Class 9a building in which *patient care areas* are located at a level that does not have direct access to a road or *open space*.

E3P3 Emergency alerts

[2019: EP3.3]

Signs or other means must be provided to alert occupants about the use of a lift during an emergency.

E3P4 Lift access for people with a disability

[2019: EP3.4]

When a passenger lift is provided in a building *required* to be *accessible*, it must be suitable for use by people with a disability.

Verification Methods

E3V1 Fire Safety Verification Method

[2019: EV3.1]

Compliance with E3P2 is verified when a building is designed in accordance with C1V4.

E3V2 Emergency alerts on the use of lifts

[2019: EV3.2]

(1) Compliance with E3P3 is verified when building occupants are provided with *automatic* warning that lifts must not be used during a fire emergency.

(2) The *automatic* warning must—

(a) be initiated by a smoke hazard management system complying with Part E2; and

(b) be provided via a sound system complying with the relevant provisions of AS 1670.4; and

(c) have a flashing warning sign installed in accordance with AS 1670.4 displaying the words “do not use lift”.

Deemed-to-Satisfy Provisions

E3D1 Deemed-to-Satisfy Provisions

[2019: E3.0]

(1) Where a *Deemed-to-Satisfy Solution* is proposed, *Performance Requirements* E3P1 to E3P4 are satisfied by complying with—

(a) E3D2 to E3D12; and

(b) for a building containing an *occupiable outdoor area*, Part G6; and

(c) for public transport buildings, Part I2.

(2) Where a *Performance Solution* is proposed, the relevant *Performance Requirements* must be determined in accordance with A2G2(3) and A2G4(3) as applicable.

E3D2 Lift installations

[2019: E3.1]

An *electric passenger lift* installation and an *electrohydraulic passenger lift* installation must comply with Specification 24.

E3D3 Stretcher facility in lifts

[2019: E3.2]

(1) A stretcher facility in accordance with (2) must be provided—

(a) in at least one emergency lift *required* by E3D5; or

(b) where an emergency lift is not *required*, if passenger lifts are installed to serve any storey above an *effective height* of 12 m, in at least one of those lifts to serve each floor served by the lifts.

(2) A stretcher facility must accommodate a raised stretcher with a patient lying on it horizontally by providing a clear space not less than 600 mm wide x 2000 mm long x 1400 mm high above the floor level.

E3D4 Warning against use of lifts in fire

[2019: E3.3]

(1) A warning sign must be displayed where it can be readily seen near every call button for a passenger lift or group of lifts throughout a building.

(2) The requirements of (1) do not apply to a small lift such as a dumb-waiter or the like that is for the transport of goods only.

(3) Each warning sign *required* by (1) must comply with the details and dimensions of Figure E3D4 and consist of—

(a) incised, inlaid or embossed letters on a metal, wood, plastic or similar plate securely and permanently attached to the wall; or

(b) letters incised or inlaid directly into the surface of the material forming the wall.

Figure E3D4: Warning sign for passenger lifts

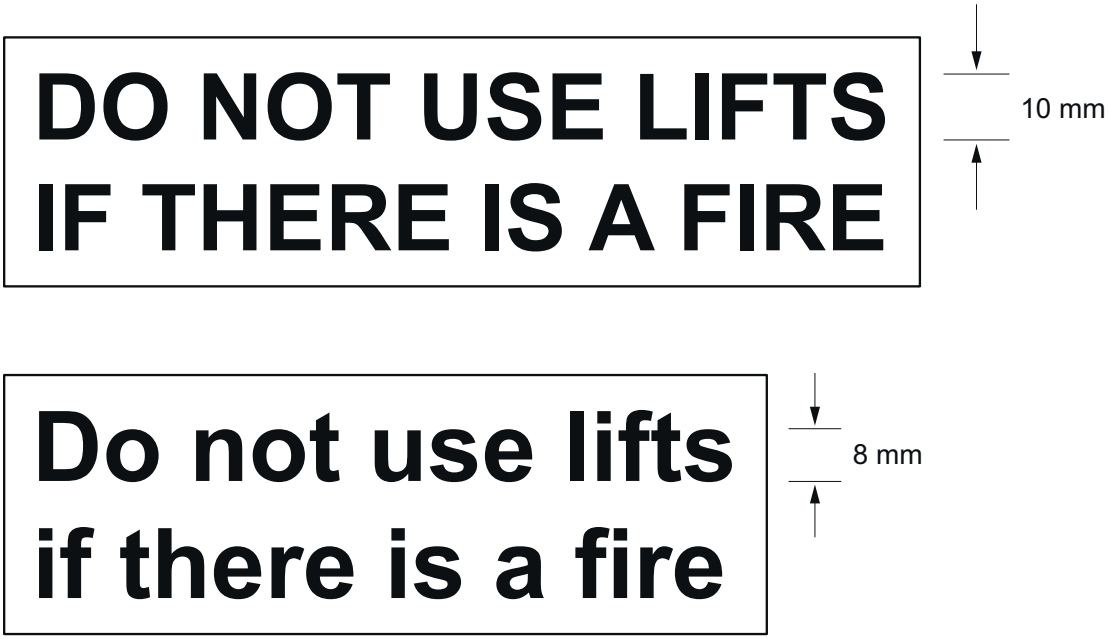

E3D5 Emergency lifts

[2019: E3.4]

(1) At least one emergency lift complying with (4) must be installed in—

(a) a building which has an *effective height* of more than 25 m; and

(b) a Class 9a building in which *patient care areas* are located at a level that does not have direct egress to a road or *open space*.

(2) An emergency lift may be combined with a passenger lift and must serve those *storeys* served by the passenger lift so that all *storeys* of the building served by passenger lifts are served by at least one emergency lift.

(3) Where two or more passenger lifts are installed and serve the same *storeys*, excluding a lift that is within an *atrium* and not contained wholly within a *shaft*—

(a) at least two emergency lifts must be provided to serve those *storeys*; and

(b) if located within different *shafts*, at least one emergency lift must be provided in each *shaft*.

(4) An emergency lift must—

(a) be contained within a *fire-resisting shaft* in accordance with C3D11; and

(b) in a Class 9a building serving a *patient care area*—

(i) have minimum dimensions, measured clear of all obstructions, including handrails, etc complying with Table E3D5; and

(ii) be connected to a standby power supply system where installed; and

(c) if the building has an *effective height* of more than 75 m, have a rating of at least—

(i) 600 kg if not provided with a stretcher facility; or

(ii) 900 kg if provided with a stretcher facility.

Table E3D5: Minimum emergency lift dimensions in Class 9a buildings

Lift component	Minimum dimension (mm)
Minimum depth of car	2280
Minimum width of car	1600
Minimum floor to ceiling height	2300

Lift component	Minimum dimension (mm)
Minimum door height	2100
Minimum door width	1300

E3D6 Landings

[2019: E3.5]

Access and egress to and from lift well landings must comply with Parts D2, D3 and D4.

E3D7 Passenger lift types and their limitations

[2019: E3.6, Table E3.6a, Table E3.6b]

(1) In an *accessible* building, every passenger lift must be one of the following lift types, subject to the limitations (if any) of each lift type:

(a) There are no limitations on the use of *electric passenger lifts*, *electrohydraulic passenger lifts* or *inclined lifts*.

(b) *Stairway platform lifts* must not—

(i) be used to serve a space in a building accommodating more than 100 persons calculated according to D2D18; or

(ii) be used in a high traffic public use area such as a theatre, cinema, auditorium, transport interchange, shopping centre or the like; or

(iii) be used where it is possible to install another type of passenger lift; or

(iv) connect more than 2 *storeys*; or

(v) where more than 1 stairway lift is installed, serve more than 2 consecutive *storeys*; or

(vi) when in the folded position, encroach on the minimum width of a stairway *required* by D2D8 to D2D11.

(c) A *low-rise platform lift* must not travel more than 1000 mm.

(d) A *low-rise, low-speed constant pressure lift* must not—

(i) for an enclosed type, travel more than 4 m; or

(ii) for an unenclosed type, travel more than 2 m; or

(iii) be used in a high traffic public use areas in buildings such as a theatre, cinema, auditorium, transport interchange, shopping complex or the like.

(e) A *small-sized, low-speed automatic lift* must not travel more than 12 m.

(2) A passenger lift referred to in (1) must not rely on a constant pressure device for its operation if the lift car is fully enclosed.

E3D8 Accessible features required for passenger lifts

[2019: Table E3.6a, Table E3.6b]

In an *accessible* building, every passenger lift must have the following features where applicable:

(a) A handrail complying with the provisions for a mandatory handrail in AS 1735.12 for all lifts except—

(i) a *stairway platform lift*; and

(ii) a *low-rise platform lift*.

(b) Lift floor dimensions of not less than 1400 mm wide x 1600 mm deep for all lifts which travel more than 12 m.

(c) Lift floor dimensions of not less than 1100 mm wide x 1400 mm deep for all lifts which travel not more than 12 m, except a *stairway platform lift*.

(d) Lift floor dimensions of not less than 810 mm wide x 1200 mm deep for a *stairway platform lift*.

(e) Minimum clear door opening complying with AS 1735.12 for all lifts except a *stairway platform lift*.

(f) Passenger protection system complying with AS 1735.12 for all lifts with power-operated doors.

(g) Lift landing doors at the upper landing for all lifts except a *stairway platform lift*.

(h) Lift car and landing control buttons complying with AS 1735.12 for all lifts except—

(i) a *stairway platform lift*; and

(ii) a *low-rise platform lift*.

(i) Lighting in accordance with AS 1735.12 for all enclosed lift cars.

(j) For all lifts serving more than 2 levels—

(i) automatic audible information within the lift car to identify the level each time the car stops; and

(ii) audible and visual indication at each lift landing to indicate the arrival of the lift car; and

(iii) audible information and audible indication *required* by (i) and (ii) is to be provided in a range of between 20 - 80 dB(A) at a maximum frequency of 1500 Hz.

(k) Emergency hands-free communication, including a button that alerts a call centre of a problem and a light to signal that the call has been received, for all lifts except a *stairway platform lift*.

E3D9 Fire service controls

[2019: E3.7]

Where lifts serve any *storey* above an *effective height* of 12 m, the following must be provided:

(a) A fire service recall control switch complying with E3D11 for—

(i) a group of lifts; or

(ii) a single lift not in a group that serves the *storey*.

(b) A lift car fire service drive control switch complying with E3D12 for every lift.

E3D10 Residential care buildings

[2019: E3.8]

(1) Where residents in a Class 9c *residential care building* are on levels which do not have direct access to a road or *open space*, the building must be provided with either—

(a) at least one lift to accommodate a stretcher in accordance with E3D3(2); or

(b) a ramp in accordance with AS 1428.1.

(2) The lift or ramp *required* by (1) must discharge at a level providing direct access to a road or *open space*.

E3D11 Fire service recall control switch

[2019: E3.9]

(1) Each group of lifts must be provided with one fire service recall control switch *required* by E3D9 that activates the fire service recall operation at (6).

(2) The switch *required* by (1) must—

(a) be located at the landing nominated by the *appropriate authority*; and

(b) be labelled “FIRE SERVICE” in indelible white lettering on a red background; and

(c) have two positions with an “OFF” and an “ON” position identified; and

(d) be operable only by the use of a key that is removable in either the “OFF” position or the “ON” position.

(3) Adhesive labels must not be used for compliance with (2)(b) and (c).

(4) The key in (2)(d) must be able to turn all fire service recall control switches in the building and must have a different key combination to other keys used for lifts in the building.

(5) The fire service recall operation must be activated by—

(a) switching the fire service recall control switch in (1) to "ON"; or

(b) a signal from a fire management system approved by the *appropriate authority*.

(6) The activation of the fire service recall operation at (5) must—

(a) cancel all registered car and landing calls; and

(b) inactivate all door reopening devices that may be affected by smoke; and

(c) ensure lift cars travelling toward the nominated floor continue to the nominated floor without stopping; and

(d) ensure lift cars travelling away from the nominated floor stop at or before the next available floor without opening the doors (either automatically or by the door open button), reverse direction and travel without stopping to the nominated floor; and

(e) for lifts stopped at a floor other than the nominated floor, close the doors and travel without stopping to the nominated floor; and

(f) ensure that lifts stay at the nominated floor with doors open; and

(g) permit all lifts to return to normal service if the fire service recall control switch at (1) is switched to the "OFF" position during or after the fire service recall operation.

(7) The requirements of (6) do not apply to lifts on inspection service or when the lift car fire service control switch *required* by E3D12 is in the "ON" position.

(8) Lifts having manual controls must signal an alert to the lift for the lift to return to the nominated floor containing the recall switch that activated the signal.

E3D12 Lift car fire service drive control switch

[2019: E3.10]

(1) The lift car fire service drive control switch *required* by E3D9 must be activated from within the lift car.

(2) The switch must—

(a) be located between 600 mm and 1500 mm above the lift car floor; and

(b) be labelled "FIRE SERVICE" by indelible white lettering on a red background; and

(c) have two positions with an "OFF" and an "ON" position identified; and

(d) operate only by the use of a key that is removable in either the "OFF" position or the "ON" position.

(3) Adhesive labels must not be used for compliance with (2)(b) or (c).

(4) When the lift car fire service drive control switch at (1) is turned to the "ON" position, the lift must—

(a) not respond to the fire service recall control switch; and

(b) cancel all registered lift car and landing calls; and

(c) override all lift car call access control systems; and

(d) inactivate all door reopening devices that may be affected by smoke; and

(e) allow the registration of lift car call by lift car call buttons, however the lift doors must not close in response to the registration of lift car calls; and

(f) activate door closing by constant pressure being applied on the "door close" button unless the button is released before the doors are fully closed, in which case the doors must reopen and any registered lift car calls must be cancelled; and

(g) when the doors are closed, move the lift in response to registered lift car calls while allowing additional lift car calls to also be registered; and

(h) travel to the first possible floor in response to registered lift car calls and cancel all registered lift car calls after the lift stops; and

(i) ensure doors do not open automatically, rather by constant pressure being applied on the "door open" button unless the button is released before the doors are fully open, in which case the doors must re-close.

(5) The requirements of (4) do not apply to a lift operating on inspection service.

(6) A multi-deck lift installation must have systems in place that—

(a) are able to communicate to the fire officer that the fire service drive control switch will not operate until all decks have been cleared of passengers; and

(b) ensure there is an appropriate method of clearing all deck landings of passengers; and

(c) maintain all doors to deck landings not containing the fire service control switch closed and inoperative while the lift is on fire service drive control.

Part E4 Visibility in an emergency, exit signs and warning systems

Introduction to this Part

This Part is intended to provide a minimum level of visibility in *evacuation routes* in an emergency, including emergency lighting and signage to assist in locating and identifying *exits*. This part also includes requirements for emergency warning and intercom systems to alert occupants and assist evacuation.

Objectives

E4O1 Objective

[2019: EO4]

The Objective of this Part is, in an emergency, to safeguard occupants from injury by—

(a) having adequate visibility; and

(b) having adequate identification of *exits* and paths of travel to *exits*; and

(c) being made aware of the emergency.

Functional Statements

E4F1 Visibility in an emergency, exit signs and warning systems

[2019: EF4.1]

A building is to be provided with—

(a) adequate visibility upon failure of normal artificial lighting during an emergency; and

(b) adequate means—

(i) of warning occupants to evacuate; and

(ii) to manage the evacuation process; and

(iii) to identify *exits* and paths of travel to an *exit*.

Performance Requirements

E4P1 Visibility in an emergency

[2019: EP4.1]

To facilitate safe evacuation in an emergency, a building must be provided with a system that—

(a) ensures a level of visibility sufficient to enable *exits*, paths of travel to *exits* and any obstacles along a path of travel to an *exit* to be identified; and

(b) activates instantaneously upon the failure of an artificial lighting system, to the degree necessary, appropriate to—

(i) the function or use of the building; and

(ii) the *floor area* of the building; and

(iii) the distance of travel to an *exit*.

Limitations

E4P1 does not apply to the internal parts of a *sole-occupancy unit* in a Class 2, 3 or 9c building or Class 4 part of a building.

E4P2 Identification of exits

[2019: EP4.2]

To facilitate evacuation, suitable signs or other means of identification must, to the degree necessary—

(a) be provided to identify the location of *exits*; and

(b) guide occupants to *exits*; and

(c) be clearly visible to occupants; and

(d) operate in the event of a power failure of the main lighting system for sufficient time for occupants to safely evacuate.

Limitations

E4P2 does not apply to the internal parts of a *sole-occupancy unit* in a Class 2 or 3 or Class 4 part of a building.

E4P3 Emergency warning and intercom systems

[2019: EP4.3]

To warn occupants of an emergency and assist evacuation of a building, an emergency warning and intercom system must be provided, to the degree necessary, appropriate to—

(a) the *floor area* of the building; and

(b) the function or use of the building; and

(c) the height of the building.

Verification Methods

E4V1 Emergency lighting

[2019: EV4.1]

(1) Compliance with E4P1 is verified for the level of visibility for safe evacuation in an emergency and instantaneous activation, when an emergency lighting system satisfies the requirements of (2) to (5).

(2) The calculated horizontal *illuminance* is not less than—

(a) 0.2 lux at floor level in the path of travel to an *exit*; and

(b) 1 lux at each floor level or tread in every *required*—

(i) *fire-isolated stairway*; or

(ii) *fire-isolated passageway*; or

(iii) *fire-isolated ramp*; or

(iv) non-*fire-isolated stairway*; or

(v) non-*fire-isolated ramp*.

(3) The emergency lighting provides a level of *illuminance* not less than—

(a) 10% of that *required* by (2) within 1 second of energisation; and

(b) 80% of that *required* by (2) within 15 seconds of energisation.

(4) The full level of illumination *required* by (2) must be achieved within 60 seconds of energisation.

(5) An emergency lighting system must operate at not less than the minimum *required* level of *illuminance* for not less than 90 minutes.

E4V2 Fire Safety Verification Method

[2019: EV4.2]

Compliance with E4P1, E4P2 and E4P3 is verified when a building is designed in accordance with C1V4.

Deemed-to-Satisfy Provisions

E4D1 Deemed-to-Satisfy Provisions

[2019: E4.0]

(1) Where a *Deemed-to-Satisfy Solution* is proposed, *Performance Requirements* E4P1 to E4P3 are satisfied by complying with—

(a) E4D2 to E4D9; and

(b) in a building containing an *atrium*, Part G3; and

(c) in a building in an *alpine area*, Part G4; and

(d) for a building containing an *occupiable outdoor area*, Part G6; and

(e) for additional requirements for Class 9b buildings, Part I1; and

(f) for *farm buildings* and *farm sheds*, Part I3.

(2) Where a *Performance Solution* is proposed, the relevant *Performance Requirements* must be determined in accordance with A2G2(3) and A2G4(3) as applicable.

SA E4D2

E4D2 Emergency lighting requirements

[2019: E4.2]

An emergency lighting system must be installed—

(a) in every *fire-isolated stairway*, *fire-isolated passageway* or *fire-isolated ramp*; and

(b) in every *storey* of a Class 5, 6, 7, 8 or 9 building where the *storey* has an area more than 300 m^2—

(i) in every passageway, corridor, hallway, or the like, that is part of the path of travel to an *exit*; and

(ii) in any room having a *floor area* more than 100 m^2 that does not open to a corridor or space that has emergency lighting or to a road or *open space*; and

(iii) in any room having a *floor area* more than 300 m^2; and

(c) in every passageway, corridor, hallway, or the like, having a length of more than 6 m from the entrance doorway of any *sole-occupancy unit* in a Class 2 or 3 building or Class 4 part of a building to the nearest doorway opening directly to—

(i) a *fire-isolated stairway*, *fire-isolated passageway* or *fire-isolated ramp*; or

(ii) an external stairway serving instead of a *fire-isolated stairway* under D2D13; or

(iii) an external balcony leading to a *fire-isolated stairway*, *fire-isolated passageway* or *fire-isolated ramp*; or

(iv) a road or *open space*; and

(d) in every *required* non-*fire-isolated stairway*; and

(e) in a *sole-occupancy unit* in a Class 5, 6 or 9 building if—

(i) the *floor area* of the unit is more than 300 m^2; and

(ii) an *exit* from the unit does not open to a road or *open space* or to an external stairway, passageway, balcony or ramp, leading directly to a road or *open space*; and

(f) in every room or space to which there is public access in every *storey* in a Class 6 or 9b building if—

(i) the *floor area* in that *storey* is more than 300 m^2; or

(ii) any point on the floor of that *storey* is more than 20 m from the nearest doorway leading directly to a stairway, ramp, passageway, road or *open space*; or

(iii) egress from that *storey* involves a vertical rise within the building of more than 1.5 m, or any vertical rise if the *storey* concerned does not admit sufficient light; or

(iv) the *storey* provides a path of travel from any other *storey required* by (i), (ii) or (iii) to have emergency lighting; and

(g) in a Class 9a *health-care building*—

(i) in every passageway, corridor, hallway, or the like, serving a *treatment area* or a *ward area*; and

(ii) in every room having a *floor area* of more than 120 m^2 in a *patient care area*; and

(h) in every Class 9c building excluding within *sole-occupancy units*; and

(i) in every *required* fire control centre.

E4D3 Measurement of distance

[2019: E4.3]

Distances, other than vertical rise, must be measured along the shortest path of travel whether by straight lines, curves or a combination of both.

E4D4 Design and operation of emergency lighting

[2019: E4.4]

Every *required* emergency lighting system must comply with AS/NZS 2293.1.

SA E4D5

E4D5 Exit signs

[2019: E4.5]

An *exit* sign must be clearly visible to persons approaching the *exit*, and must be installed on, above or adjacent to each—

(a) door providing direct egress from a *storey* to—

(i) an enclosed stairway, passageway or ramp serving as a *required exit*; and

(ii) an external stairway, passageway or ramp serving as a *required exit*; and

(iii) an external access balcony leading to a *required exit*; and

(b) door from an enclosed stairway, passageway or ramp at every level of discharge to a road or *open space*; and

(c) *horizontal exit*; and

(d) door serving as, or forming part of, a *required exit* in a *storey required* to be provided with emergency lighting in accordance with E4D2.

NSW E4D6

E4D6 Direction signs

[2019: E4.6]

If an *exit* is not readily apparent to persons occupying or visiting the building then *exit* signs must be installed in appropriate positions in corridors, hallways, lobbies, and the like, indicating the direction to a *required exit*.

E4D7 Class 2 and 3 buildings and Class 4 parts: exemptions

[2019: E4.7]

E4D5 does not apply to—

(a) a Class 2 building in which every door referred to is clearly and legibly labelled on the side remote from the *exit* or balcony—

(i) with the word "EXIT" in capital letters 25 mm high in a colour contrasting with that of the background; or

(ii) by some other suitable method; and

(b) an entrance door of a *sole-occupancy unit* in a Class 2 or 3 building or Class 4 part of a building.

SA E4D8

E4D8 Design and operation of exit signs

[2019: E4.8]

Every *required exit* sign must—

(a) comply with—

(i) AS/NZS 2293.1; or

(ii) for a photoluminescent *exit* sign, Specification 25; and

(b) be clearly visible at all times when the building is occupied by any person having the right of legal entry to the building.

E4D9 Emergency warning and intercom systems

[2019: E4.9]

An emergency warning and intercom system complying, where applicable, with AS 1670.4 must be installed—

(a) in a building with an *effective height* of more than 25 m; and

(b) in a Class 3 building having a *rise in storeys* of more than 2 and used as—

(i) the residential part of a primary or secondary *school*; or

(ii) accommodation for the aged, children or people with a disability; and

(c) in a Class 3 building used as a *residential care building*, except that the system—

(i) must be arranged to provide a warning for occupants; and

(ii) in areas used by the residents, may have its alarm adjusted in volume and content to minimise trauma consistent with the type and condition of residents; and

(d) in a Class 9a building having a *floor area* of more than 1000 m^2 or a *rise in storeys* of more than 2, and the system—

(i) must be arranged to provide a warning for occupants; and

(ii) in a *ward area*, may have its alarm adjusted in volume and content to minimise trauma consistent with the type and condition of patients; and

(e) in a Class 9b building—

(i) used as a *school* and having a *rise in storeys* of more than 3; or

(ii) used as a theatre, public hall, or the like, having a *floor area* more than 1000 m^2 or a *rise in storeys* of more than 2.

Specification 17 Fire sprinkler systems

S17C1 Scope

[2019: Spec E1.5: 1]

This Specification sets out requirements for the design and installation of fire sprinkler systems.

VIC S17C2

S17C2 Application of automatic fire sprinkler standards

[2019: Spec E1.5: 2]

Subject to this Specification, an *automatic* fire sprinkler system must comply with—

(a) for all building classifications: AS 2118.1; or

(b) for a Class 2 or 3 building with an *effective height* of not more than 25 m and a *rise in storeys* of 4 or more: Specification 18 and the relevant provisions of this Specification as applicable; or

(c) for Class 5, 6, 7, 8, 9a (other than a *residential care building*) or 9b (other than a Class 9b *early childhood centre*) parts of a building with an *effective height* not more than 25 m, which also contains Class 2 or 3 parts: a sprinkler system in accordance with Specification 18 as for a Class 2 or 3 building and the relevant provisions of this Specification except—

(i) a FPAA101D sprinkler system cannot be used where the Class 5, 6, 7, 8, 9a (other than a *residential care building*) or 9b parts—

(A) contain more than 2 *storeys*; or

(B) are more than 25% of the total floor area of the building; or

(C) are located above the fourth *storey*; and

(ii) a FPAA101D or FPAA101H sprinkler system cannot be used where the Class 7a part (other than an *open-deck carpark*) accommodates more than 40 vehicles; or

(d) for a combined sprinkler and fire hydrant system: AS 2118.6; or

(e) for a Class 9a *health-care building* used as a *residential care building*: AS 2118.4 as applicable; or

(f) for a Class 2, 3 or 9c building: AS 2118.4 as applicable.

S17C3 Separation of sprinklered and non-sprinklered areas

[2019: Spec E1.5: 3]

Where a part of a building is not protected with sprinklers, the sprinklered and non-sprinklered parts must be fire-separated with a wall or floor which must—

(a) comply with any specific requirement of the *Deemed-to-Satisfy Provisions* of the BCA; or

(b) where there is no specific requirement, comply with the relevant part of AS 2118, FPAA101D or FPAA101H.

S17C4 Protection of openings

[2019: Spec E1.5: 4]

Any openings, including those for service penetrations, in construction separating sprinklered and non-sprinklered parts of a building, including the construction separating the areas nominated for omitted protection in AS 2118.1, must be protected in accordance with the *Deemed-to-Satisfy Provisions* of Part C4.

S17C5 Quick response sprinklers

[2019: Spec E1.5: 5]

Quick response sprinklers may be installed only if they are suitable for the type of application proposed and it is demonstrated that the sprinkler system is designed to accommodate their use.

S17C6 Sprinkler valve enclosures

[2019: Spec E1.5: 6]

(1) Sprinkler alarm valves must be located in a secure room or enclosure which has direct egress to a road or open space.

(2) All sprinkler valve rooms and enclosures must be secured with a system suitable for use by the *fire brigade*.

S17C7 Water supply

[2019: Spec E1.5: 7]

(1) A *required* sprinkler system must be provided with at least one water supply.

(2) A *required* sprinkler system in a building greater than 25 m in *effective height* must be provided with a dual water supply except that a secondary water supply storage capacity of 25,000 litres may be used if—

(a) the storage tank is located at the topmost *storey* of the building; and

(b) the building occupancy is classified as no more hazardous than Ordinary Hazard 2 (OH2) under AS 2118.1; and

(c) an operational *fire brigade* service is available to attend a building fire.

S17C8 Building occupant warning system

[2019: Spec E1.5: 8]

A *required* sprinkler system, except a FPAA101D sprinkler system, must be connected to and activate a building occupant warning system complying with S20C7.

S17C9 Connection to other systems

[2019: Spec E1.5: 9]

Where a smoke hazard management system is installed and is actuated by smoke detectors, the sprinkler system must, wherever practicable, be arranged to also activate the smoke hazard management system.

S17C10 Anti-tamper devices

[2019: Spec E1.5: 10]

(1) Where a sprinkler system is installed—

(a) over any *stage* area in a theatre, public hall or the like, visual and audible status indication of sprinkler valves must be provided at the location normally used by the *stage* manager; or

(b) in a space housing lift electrical and control equipment (including machine rooms, secondary floors and sheave rooms), any valves provided to control sprinklers in these spaces must be located adjacent to the space.

(2) Any valves provided to control sprinklers required by (1) must be fitted with anti-tamper monitoring devices connected to a monitoring panel.

S17C11 Sprinkler systems in carparks

[2019: Spec E1.5: 11]

A sprinkler system protecting a *carpark* complying with S5C19(3) in a multi-classified building must—

(a) be independent of the sprinkler system protecting any part of the building not used as a *carpark*; or

(b) if forming part of a sprinkler system protecting a part of the building not used as a *carpark*, be designed such that the section protecting the non-*carpark* part can be isolated without interrupting the water supply or otherwise affecting the effective operation of the section protecting the *carpark*.

S17C12 Residential care buildings

[2019: Spec E1.5: 12]

(1) In addition to the provisions of AS 2118.4, a sprinkler system in—

(a) a Class 3 building used as a *residential care building*; or

(b) a Class 9a *health-care building* used as a *residential care building*; or

(c) a Class 9c building,

must comply with sub-clause (2).

(2) Any sprinkler system referred to in (1) must—

(a) be provided with a monitored main stop valve in accordance with AS 2118.1; and

(b) be permanently connected with a direct data link or other approved monitoring system to a fire station or fire station dispatch centre.

S17C13 Sprinkler systems in lift installations

[2019: Spec E1.5: 13]

(1) Where sprinklers are installed in a space housing lift electrical and control equipment, including machine rooms, secondary floors and sheave rooms, sprinklers in these spaces must—

(a) have heads protected from accidental damage by way of a guard that will not impair the performance of the head; and

(b) be capable of being isolated and drained, either separately or collectively, without isolating any other sprinklers within the building.

(2) Valves provided to control sprinklers referred to in (1) must be installed in accordance with S17C10(2).

S17C14 Early childhood centres

[New for 2022]

Quick response sprinklers must be provided to a Class 9b *early childhood centre required* to have an *automatic* fire sprinkler system.

Limitations

S17C14 does not apply to a Class 9b *early childhood centre*—

(a) wholly within a *storey* that provides direct egress to a road or *open space*; or

(b) with a *rise in storeys* of not more than 2, where the Class 9b *early childhood centre* is the only use in that building.

Specification 18 Class 2 and 3 buildings not more than 25 m in effective height

S18C1 Scope

[2019: Spec E1.5a: 1]

This Specification sets out requirements for the design and installation of fire sprinkler systems, and concessions for Class 2 and 3 buildings not more than 25 m in *effective height* with a *rise in storeys* of 4 or more.

S18C2 Application

[2019: Spec E1.5a: 1]

The *Deemed-to-Satisfy Provisions* of this Specification take precedence where there is a difference to the *Deemed-to-Satisfy Provisions* of Sections C, D and E.

S18C3 System requirements

[2019: Spec E1.5a: 2]

VIC S18C3(1)

(1) A *required automatic* fire sprinkler system installed in a Class 2 or 3 building with an *effective height* of not more than 25 m and a *rise in storeys* of 4 or more must comply with—

(a) AS 2118.1; or

(b) AS 2118.4, as applicable; or

(c) FPAA101D, except for *residential care buildings*; or

(d) FPAA101H, except for *residential care buildings*.

(2) A Class 2 or 3 building not more than 25 m in *effective height* with a *rise in storeys* of 4 or more provided with an *automatic* fire sprinkler system under (1)(a) or (1)(b) may be constructed in accordance with S18C4(1), as applicable, provided—

(a) the *automatic* fire sprinkler system is permanently connected to a fire alarm monitoring system connected to a fire station or fire station dispatch centre in accordance with Specification 23 if—

(i) the system has more than 100 sprinkler heads; or

(ii) in the case of a *residential care building*, the building will accommodate more than 32 residents; and

(b) the *automatic* fire sprinkler system is fitted with sprinklers complying with clauses 4.4, 4.5 and 5.5.2 of AS 2118.4 in bedrooms; and

(c) an *automatic* smoke detection and alarm system is installed in accordance with Specification 20 except that it need not be connected to a fire alarm monitoring system connected to a fire station or fire station dispatch centre, and in the case of a *residential care building* it must be installed in accordance with—

(i) S20C4; or

(ii) both—

(A) S20C3, provided S20C3(1)(b) is applied as if the building was not protected with a sprinkler system; and

(B) Specification 23; and

(d) in a *residential care building*, the *automatic* smoke detection and alarm system and the *automatic* fire sprinkler system are connected to a local fire indicator panel provided in accordance with Specification 23; and

(e) fire orders are provided in a Class 3 building in accordance with G4D8 as for a building in an *alpine area*.

S18C4 Permitted concessions

[2019: Spec E1.5a: 3]

(1) The following concessions are permitted for Class 2 and 3 buildings provided with a *required automatic* fire sprinkler system in accordance with S18C3(1)(a) or (1)(b):

(a) The FRL for *self-closing* fire doors, as *required* by C4D9 and C4D12, may be reduced to not less than –/30/30.

(b) The FRL for—

(i) all non-*loadbearing internal walls* and *shafts* constructed of *fire-protected timber*, as *required* by Specification 5 to have FRLs greater than –/60/60, may be reduced to –/60/60 and service penetrations through non-*loadbearing internal walls* and *shafts* constructed of *fire-protected timber*, *required* by C4D15, may be reduced to not less than –/60/15; and

(ii) all other non-*loadbearing internal walls*, as *required* by Specification 5, may be reduced to –/45/45 and the FRL for service penetrations through non-*loadbearing internal walls* and *shafts*, as *required* by C4D15, may be reduced to –/45/15.

(c) The FRL for *fire-isolated stairways* enclosed with non-*loadbearing* construction, as *required* by D2D4, may be reduced to –/45/45.

(d) Except in a *residential care building*, the maximum distance of travel, as *required* by D2D5(1)(a)(i), may be increased from 6 m to 12 m.

(e) The maximum distance of travel from a single *exit* serving the *storey* at the level of egress to a road or *open space*, as *required* by D2D5(1)(a)(ii), may be increased from 20 m to 30 m.

(f) The maximum distance between alternative *exits*, as *required* by D2D6(c)(i), may be increased from 45 m to 60 m.

(g) Internal fire hydrants in accordance with E1D2 are not *required* where—

(i) the building is served by external fire hydrants that provide compliant coverage installed in accordance with E1D2, except that in a *residential care building* the nozzle at the end of the length of hose need only reach the entry door of any *sole-occupancy unit* to be considered as covering the area within the *sole-occupancy unit*; or

(ii) a dry fire hydrant system that otherwise complies with AS 2419.1 is installed in the building and—

(A) each fire hydrant head is located in accordance with E1D2 and fitted with a blank end cap or plug; and

(B) the pipework is installed in accordance with E1D2 (as for a *required* fire main) except that it need not be connected to a water supply; and

(C) a hydrant booster inlet connection is provided in accordance with E1D2; and

(D) an external street or feed hydrant capable of providing the *required* system flow is located within 60 m of the hydrant booster connection.

(h) An emergency warning and intercom system need not be provided in a *residential care building* in accordance with E4D9 if a warning system with an override public address facility is installed in accordance with Specification 23.

(2) The following concessions are permitted for Class 2 and 3 buildings provided with a *required automatic* fire sprinkler system in accordance with S18C3(1)(c):

(a) Window openings need not be protected in accordance with C4D12(8) provided the room served by the window is sprinkler protected.

(b) The FRL for—

(i) service penetrations through non-*loadbearing internal walls* and *shafts*, as *required* by C4D15, may be reduced to –/60/15; and

(ii) non-*loadbearing fire-resisting* lift and stair *shafts*, as *required* by Specification 5, may be reduced to –/60/60.

(c) The maximum distance of travel, as *required* by D2D5(1)(a)(i), may be increased from 6 m to 12 m.

(d) The maximum distance of travel from a single *exit* serving the *storey* at the level of egress to a road or *open space*, as *required* by D2D5(1)(a)(ii), may be increased from 20 m to 30 m.

(e) The maximum distance between alternative *exits*, as *required* by D2D6(c)(i), may be increased from 45 m to 60 m.

(f) Internal fire hydrants in accordance with E1D2 are not *required* where—

(i) the building is served by external fire hydrants that provide compliant coverage installed in accordance with E1D2; or

(ii) a dry fire hydrant system that otherwise complies with AS 2419.1 is installed in the building except—

(A) the system pipework is not connected to the water supply; and

(B) an on-site fire pumpset is not *required*; and

(C) the minimum fire hydrant outlet flow of 6 L/s may be achieved when boosted by a *fire brigade* pumping appliance; and

(D) the minimum pipe sizes specified in AS 2419.1 do not apply.

(g) Where a dry fire hydrant system is installed for the purposes of (f)—

(i) each fire hydrant head must be located in accordance with E1D2 and fitted with a blank end cap or plug; and

(ii) a hydrant booster inlet connection must be provided in accordance with E1D2; and

(iii) an external street or feed hydrant capable of providing the *required* system flow must be located within 60 m of the hydrant booster connection.

(3) The following concessions are permitted for Class 2 and 3 buildings provided with a *required automatic* fire sprinkler system in accordance with S18C3(1)(d):

(a) Window openings need not be protected in accordance with C4D12(8) provided the room served by the window is sprinkler protected.

(b) The FRL for—

(i) service penetrations through non-*loadbearing internal walls* and *shafts*, as *required* by C4D15, may be reduced to –/60/15; and

(ii) non-*loadbearing fire-resisting* lift and stair *shafts*, as *required* by Specification 5, may be reduced to –/60/60.

(c) The maximum distance of travel, as *required* by D2D5(1)(a)(i), may be increased from 6 m to 12 m.

(d) The maximum distance of travel from a single *exit* serving the *storey* at the level of egress to a road or *open space*, as *required* by D2D5(1)(a)(ii), may be increased from 20 m to 30 m.

(e) The maximum distance between alternative *exits*, as *required* by D2D6(c)(i), may be increased from 45 m to 60 m.

Specification 19 Fire control centres

S19C1 Scope

[2019: Spec E1.8: 1]

(1) This Specification describes the construction and content of *required* fire control centres and rooms.

(2) A fire control room is a fire control centre in a dedicated room with additional specific requirements.

S19C2 Application

[2019: Spec E1.8: 1]

(1) S19C3 to S19C6 apply to fire control centres (including fire control rooms).

(2) S19C7 to S19C13 apply additional requirements to fire control rooms.

S19C3 Purpose and content of fire control centre

[2019: Spec E1.8: 2]

A fire control centre must—

(a) provide an area from which fire-fighting operations or other emergency procedures can be directed or controlled; and

(b) contain controls, panels, telephones, furniture, equipment and the like associated with the *required* fire services in the building; and

(c) not be used for any purpose other than the control of—

(i) fire-fighting activities; and

(ii) other measures concerning the occupant safety or security.

S19C4 Location of fire control centre

[2019: Spec E1.8: 3]

A fire control centre must be so located in a building that egress from any part of its floor, to a road or *open space*, does not involve changes in level which in aggregate exceed 300 mm.

S19C5 Equipment not permitted within a fire control centre

[2019: Spec E1.8: 4]

An internal combustion engine, pumps, sprinkler control valves, pipes and pipe fittings must not be located in a fire control centre, but may be located in rooms accessed through the fire control centre.

S19C6 Ambient sound level for a fire control centre

[2019: Spec E1.8: 5]

(1) The ambient sound level within the fire control centre measured when all fire safety equipment is operating in the manner in which it operates in an emergency must not exceed 65 dB(A).

(2) The measurement must be taken for a sufficient time to characterise the effects of all sound sources.

(3) Where there is not a great variation in noise level, a measurement time of 60 seconds may be used.

S19C7 Construction of a fire control room

[2019: Spec E1.8: 6]

A fire control centre in a building more than 50 m in *effective height* must be in a separate room where—

(a) the enclosing construction is of concrete, masonry or the like, sufficiently impact resistant to withstand the impact of any likely falling debris, and with an FRL of not less than 120/120/120; and

(b) any material used as a finish, surface, lining or the like within the room complies with the requirements of Specification 7; and

(c) services, pipes, ducts and the like that are not directly *required* for the proper functioning of the fire control room do not pass through it; and

(d) openings in the walls, floors or ceiling which separate the room from the interior of the building are confined to doorways, ventilation and other openings for services necessary for the proper functioning of the facility.

S19C8 Protection of openings in a fire control room

[2019: Spec E1.8: 7]

Openings permitted by S19C7 must be protected as follows:

(a) Openings for *windows*, doorways, ventilation, service pipes, conduits and the like, in an *external wall* of the building that faces a road or *open space*, must be protected in accordance with the *Deemed-to-Satisfy Provisions* of Part C4.

(b) Openings in the floors, ceilings and *internal walls* enclosing a fire control room must, except for doorways, be protected in accordance with the *Deemed-to-Satisfy Provisions* of Part C4.

(c) A door opening in the *internal walls* enclosing a fire-control room, must be fitted with a *self-closing* –/120/30 smoke sealed fire door.

(d) Openings associated with natural or mechanical ventilation must—

(i) not be made in any ceiling or floor immediately above or below the fire control room; and

(ii) be protected by a –/120/– fire damper if the opening is for a duct through a wall *required* to have an FRL, other than an *external wall*.

S19C9 Doors to a fire control room

[2019: Spec E1.8: 8]

(1) *Required* doors to a fire control room must open into the room, be lockable and located so that persons using escape routes from the building will not obstruct or hinder access to the room.

(2) The fire control room must be accessible via two paths of travel—

(a) one from the front entrance of the building; and

(b) one direct from a public place or *fire-isolated passageway* which leads to a public place and has a door with an FRL of not less than –/120/30.

S19C10 Size and contents of a fire control room

[2019: Spec E1.8: 9]

(1) A fire control room must contain—

(a) a Fire Indicator Panel and necessary control switches and visual status indication for all *required* fire pumps, smoke control fans and other *required* fire safety equipment installed in the building; and

(b) a telephone directly connected to an external telephone exchange; and

(c) a blackboard or whiteboard not less than 1200 mm wide x 1000 mm high; and

(d) a pin-up board not less than 1200 mm wide x 1000 mm high; and

(e) a raked plan layout table of a size suitable for laying out the plans provided under (f); and

(f) colour-coded, durable, tactical fire plans.

(2) In addition, a fire control room may contain—

(a) master emergency control panels, lift annunciator panels, remote switching controls for gas or electrical supplies and emergency generator backup; and

(b) building security, surveillance and management systems if they are completely segregated from all other systems.

(3) A fire control room must—

(a) have a *floor area* of not less than 10 m^2 and the length of any internal side must be not less than 2.5 m; and

(b) if only the minimum prescribed equipment is installed — have a net *floor area* of not less than 8 m^2 with a clear space of not less than 1.5 m^2 in front of the Fire Indicator Panel; and

(c) if additional equipment is installed — have an additional area of not less than 2 m^2 net *floor area* for each additional facility and a clear space of not less than 1.5 m^2 in front of each additional control or indicator panel; and

(d) be constructed such that the area *required* for any path of travel through the room to other areas is provided in addition to the requirements (b) and (c).

S19C11 Ventilation and power supply for a fire control room

[2019: Spec E1.8: 10]

(1) A fire control room must be ventilated by—

(a) natural ventilation from a *window* or doorway in an *external wall* of the building which opens directly into the fire control room from a road or *open space*; or

(b) a pressurisation system that only serves the fire control room, and—

(i) is installed in accordance with AS 1668.1 as though the room is a *fire-isolated stairway*; and

(ii) is activated *automatically* by operation of the fire alarm, or sprinkler system complying with Specification 17, installed in the building and manually by an over-riding control in the room; and

(iii) provides a flow of fresh air through the room of not less than 30 air changes per hour when the system is operating and any door to the room is open; and

(iv) has fans, motors and ductwork that form part of the system but not contained within the fire control room protected by enclosing construction with an FRL of not less than 120/120/120; and

(v) has any electrical supply to the fire control room or equipment necessary for its operation connected to the supply side of the main disconnection switch for the building.

(2) No openable devices, other than necessary doorways, pressure controlled relief louvres and *windows* that are openable by a key, must be constructed in the fire control room.

S19C12 Sign for a fire control room

[2019: Spec E1.8: 11]

The external face of the door to the fire control room must have a sign with the words—

FIRE CONTROL ROOM

in letters not less than 50 mm high and of a colour which contrasts with that of the background.

S19C13 Lighting for a fire control room

[2019: Spec E1.8: 12]

Emergency lighting in accordance with the *Deemed-to-Satisfy Provisions* of Part E4 must be provided in a fire control room, except that an illumination level of not less than 400 lux must be maintained at the surface of the plan table.

Specification 20 Smoke detection and alarm systems

S20C1 Scope

[2019: Spec E2.2a: 1]

This Specification describes the installation and operation of *automatic* smoke detection and alarm systems.

S20C2 Type of system

[2019: Spec E2.2a: 2]

A *required automatic* smoke detection and alarm system must be provided in accordance with the following:

(a) Class 2 buildings and Class 4 parts of a building—

(i) a smoke alarm system complying with S20C3; or

(ii) a smoke detection system complying with S20C4; or

(iii) a combination of a smoke alarm system and a smoke detection system complying with S20C5.

(b) Class 3 buildings—

(i) with a Class 3 part located more than 2 *storeys* above ground level — a smoke detection system complying with S20C4; or

(ii) which accommodate more than 20 residents and are the residential part of a *school*, accommodation for the aged, children or people with a disability — a smoke detection system complying with S20C4; or

(iii) all other Class 3 buildings—

(A) a smoke alarm system complying with S20C3; or

(B) a smoke detection system complying with S20C4; or

(C) a combination of a smoke alarm system and a smoke detection system complying with S20C5.

(c) Class 5, 6, 7, 8, 9b and 9c buildings — a smoke detection system complying with S20C4

(d) Class 9a *health-care buildings*—

(i) where more than 6 bed patients are accommodated — a smoke detection system complying with S20C4; or

(ii) where 6 or less bed patients are accommodated—

(A) a smoke alarm system complying with S20C3; or

(B) a smoke detection system complying with S20C4.

S20C3 Smoke alarm system

[2019: Spec E2.2a: 3]

(1) In all Class 2 to 9 buildings provided with a smoke alarm system, the following applies:

(a) A smoke alarm system must—

(i) consist of smoke alarms complying with AS 3786; and

(ii) be powered from the consumer mains source.

(b) In kitchens and other areas where the use of the area is likely to result in smoke alarms causing spurious signals, subject to (c)—

(i) any other alarm deemed suitable in accordance with AS 1670.1 may be installed provided that smoke alarms are installed elsewhere in the *sole-occupancy unit* in accordance with (2)(a) and (2)(b); or

(ii) an alarm acknowledgement facility may be installed.

(c) Where a kitchen or other area referred to in (b) is in a building protected with a sprinkler system complying with

Specification 17 (other than a FPAA101D system), alarms need not be installed in the kitchen or other area likely to result in spurious signals.

(2) In a Class 2 or 3 building or Class 4 part of a building provided with a smoke alarm system, the following applies:

(a) Alarms must be installed within each *sole-occupancy unit*, and located on or near the ceiling in any *storey*—

(i) containing bedrooms—

(A) between each part of the *sole-occupancy unit* containing bedrooms and the remainder of the *sole-occupancy unit*; and

(B) where bedrooms are served by a hallway, in that hallway; and

(ii) not containing any bedrooms, in egress paths.

(b) Where there is more than one alarm installed within a *sole-occupancy unit*, alarms must be interconnected within that *sole-occupancy unit*.

(c) Subject to (d), alarms must be—

(i) installed in *public corridors* and other internal public spaces, located in accordance with the requirements for smoke detectors in AS 1670.1; and

(ii) connected to activate a building occupant warning system in accordance with S20C7.

(d) In a Class 2 or 3 building or Class 4 part of a building protected with a sprinkler system complying with Specification 17 (other than a FPAA101D system), alarms are not *required* in *public corridors* and other internal public spaces.

(3) In a Class 9a building provided with a smoke alarm system, smoke alarms must be—

(a) installed in every room, *public corridor* and other internal public space; and

(b) located in accordance with the requirements for smoke detectors in AS 1670.1; and

(c) interconnected to provide a common alarm; and

(d) have manual call points installed in *evacuation routes* so that no point on a floor is more than 30 m from a manual call point.

S20C4 Smoke detection system

[2019: Spec E2.2a: 4]

(1) In all Class 2 to 9 buildings provided with a smoke detection system, the following applies:

(a) A smoke detection system must—

(i) subject to (2), (3) and (4), comply with AS 1670.1; and

(ii) activate a building occupant warning system in accordance with S20C7.

(b) In kitchens and other areas where the use of the area is likely to result in smoke detectors causing spurious signals, subject to (c)—

(i) any other detector deemed suitable in accordance with AS 1670.1 may be installed provided that smoke detectors are installed elsewhere in the *sole-occupancy unit* in accordance with the requirements for alarms in S20C3(2)(a) and (2)(b); or

(ii) an alarm acknowledgement facility may be installed.

(c) Where a kitchen or other area referred to in (b) is in a building protected with a sprinkler system complying with Specification 17 (other than a FPAA101D or FPAA101H system), detectors need not be installed in the kitchen or other areas likely to result in spurious signals.

(2) In a Class 2 or 3 building or Class 4 part of a building provided with a smoke detection system, the following applies:

(a) Smoke detectors must be installed—

(i) within each *sole-occupancy unit*, in accordance with the requirements for alarms in S20C3(2)(a) and (2)(b); and

(ii) subject to (b), in *public corridors* and other internal public spaces.

(b) In a Class 2 or 3 building or Class 4 part of a building protected with a sprinkler system complying with Specification 17 (other than a FPAA101D or FPAA101H system), smoke detectors are not *required* in *public*

corridors and other internal public spaces.

(3) In a Class 9a *health-care building* provided with a smoke detection system, the following applies:

(a) Except as provided in (b)—

(i) photoelectric type smoke detectors must be installed in *patient care areas* and in paths of travel to *exits* from *patient care areas*; and

(ii) in areas other than *patient care areas* and paths of travel to *exits* from *patient care areas*, where the use of the area is likely to result in smoke detectors causing spurious signals, any other detector deemed suitable in accordance with AS 1670.1 may be installed in lieu of smoke detectors.

(b) The requirements of (a) do not apply where an area is protected with a sprinkler system complying with Specification 17, smoke detectors need not be installed where the use of the area is likely to result in spurious signals.

(c) Manual call points must be installed in *evacuation routes* so that no point on a floor is more than 30 m from a manual call point.

VIC S20C4(4)

(4) In a Class 9c building provided with a smoke detection system, the following applies:

(a) remote automatic indication of each zone must be given in each smoke compartment by means of—

(i) mimic panels with an illuminated display; or

(ii) annunciator panels with alpha numeric display; and

(b) if the building accommodates more than 20 residents, manual call points must be installed in paths of travel so that no point on a floor is more than 30 m from a manual call point.

S20C5 Combined smoke alarm and smoke detection system

[2019: Spec E2.2a: 5]

(1) A Class 2 or 3 building or Class 4 part of a building provided with a combination of a smoke alarm system and smoke detection system in accordance with S20C2 must—

(a) be provided with a smoke alarm system complying with S20C3 within *sole-occupancy units*; and

(b) subject to (2), be provided with a smoke detection system complying with S20C4 in areas not within *sole-occupancy units*.

(2) In a Class 2 or 3 building or Class 4 part of a building protected with a sprinkler system complying with Specification 17 (other than a FPAA101D or FPAA101H system), smoke detectors are not *required* in *public corridors* and other internal public spaces.

S20C6 Smoke detection for smoke control systems

[2019: Spec E2.2a: 6]

(1) Smoke detectors *required* to activate air pressurisation systems for fire-isolated *exits* and zone pressurisation systems must—

(a) be installed in accordance with AS 1670.1; and

(b) have additional smoke detectors installed adjacent to each bank of lift landing doors set back horizontally from the door openings by a distance of not more than 3 m.

(2) Smoke detectors *required* to activate—

(a) *automatic* shutdown of air-handling systems in accordance with E2D16, E2D17 or E2D19; or

(b) a smoke exhaust system in accordance with Specification 21,

must comply with the requirements of (3).

(3) Smoke detectors referred to in (2) must—

(a) be spaced—

(i) not more than 20 m apart and not more than 10 m from any wall, bulkhead or smoke curtain; and

(ii) in enclosed malls and walkways in a Class 6 building not more than 15 m apart and not more than 7.5 m from any wall, bulkhead or curtain; and

(b) have a sensitivity—

(i) in accordance with AS 1670.1 in areas other than a multi-*storey* walkway and mall in a Class 6 building; and

(ii) not exceeding 0.5% smoke obscuration per metre with compensation for external airborne contamination as necessary, in a multi-*storey* walkway and mall in a Class 6 building.

(4) Smoke detectors provided to activate a smoke control system must—

(a) either—

(i) form part of a building fire or smoke detection system complying with AS 1670.1; or

(ii) be a separate dedicated system incorporating control and indicating equipment complying with AS 1670.1; and

(b) activate a building occupant warning system complying with S20C7, except that smoke detectors provided solely to initiate *automatic* shutdown of air-handling systems in accordance with (2)(a) need not activate a building occupant warning system.

S20C7 Building occupant warning system

[2019: Spec E2.2a: 7]

Subject to E4D9, a building occupant warning system provided as part of a smoke hazard management system must comply with clause 3.22 of AS 1670.1 to sound through all occupied areas except—

(a) in a Class 2 and 3 building or Class 4 part of a building provided with a smoke alarm system in accordance with S20C3(2)(c)—

(i) the sound pressure level need not be measured within a *sole-occupancy unit* if a level of not less than 85 dB(A) is provided at the door providing access to the *sole-occupancy unit*; and

(ii) the inbuilt sounders of the smoke alarms may be used to wholly or partially meet the requirements; and

(b) in a Class 2 and 3 building or Class 4 part of a building provided with a smoke detection system in accordance with S20C4(2), the sound pressure level from a building occupant warning system need not be measured within a *sole-occupancy unit* if a level of not less than 100 dB(A) is provided at the door providing access to the *sole-occupancy unit*; and

(c) in a Class 3 building used as a *residential care building*, the system—

(i) must be arranged to provide a warning for occupants; and

(ii) in areas used by residents, may have its alarm adjusted in volume and content to minimise trauma consistent with the type and condition of residents; and

(d) in a Class 9a *health-care building*, in a *patient care area*, the system—

(i) must be arranged to provide a warning for occupants; and

(ii) in a *ward area*, may have its alarm adjusted in volume and content to minimise trauma consistent with the type and condition of the patients; and

(e) in a Class 9c building, the system—

(i) must be arranged to provide a warning for occupants; and

(ii) must notify staff caring for the residents of the building; and

(iii) in areas used by residents, may have its alarm adjusted in volume and content to minimise trauma consistent with the type and condition of residents.

NSW S20C8

VIC S20C8

S20C8 System monitoring

[2019: Spec E2.2a: 8]

The following installations must be connected to a fire alarm monitoring system connected to a fire station or fire station dispatch centre in accordance with AS 1670.3:

(a) A smoke detection system in a Class 3 building provided in accordance with S20C2(b)(i) or S20C2(b)(ii).

(b) A smoke detection system in a Class 9a *health-care building*, if the building accommodates more than 20 patients.

(c) A smoke detection system in a Class 9c building.

(d) Smoke detection in accordance with S20C6 provided to activate—

(i) a smoke exhaust system in accordance with Specification 21; or

(ii) *smoke-and-heat vents* in accordance with Specification 22.

(e) An *automatic* fire detection and alarm system *required* by E2D10 for large isolated buildings subject to C3D4.

Specification 21 Smoke exhaust systems

S21C1 Scope

[2019: Spec E2.2b: 1]

This Specification describes the requirements for mechanical smoke exhaust systems.

S21C2 Smoke exhaust capacity

[2019: Spec E2.2b: 2]

(1) Smoke exhaust fans must have a sufficient capacity to contain the smoke layer—

(a) within a smoke reservoir formed in accordance with S21C4 and not less than 2 m above the highest floor level; and

(b) above the top of any openings interconnecting different smoke reservoirs.

(2) Exhaust rates must be determined in accordance with Figure S21C2, with the height measurement taken from the lowest floor level to the underside of the smoke layer and the *fire load* determined in accordance with Table S21C2.

Table S21C2: Fire load (MW)

Classification	*Fire load* (MW) for unsprinklered buildings	*Fire load* (MW) for sprinklered buildings
Class 2, 3 or 5	5	1.5
Class 6	10	5
Class 7 or 8	15	5
Class 9 — generally	5	1.5
Class 9b buildings covered by Part I1 (see Note) or exhibition halls	10	5

Table Notes

If the smoke reservoir above the *stage* is smoke separated from the audience area, the *fire load* specified applies to the *stage* area only and the *fire load* for the audience area is as per Class 9 generally.

Figure S21C2: Smoke exhaust rate

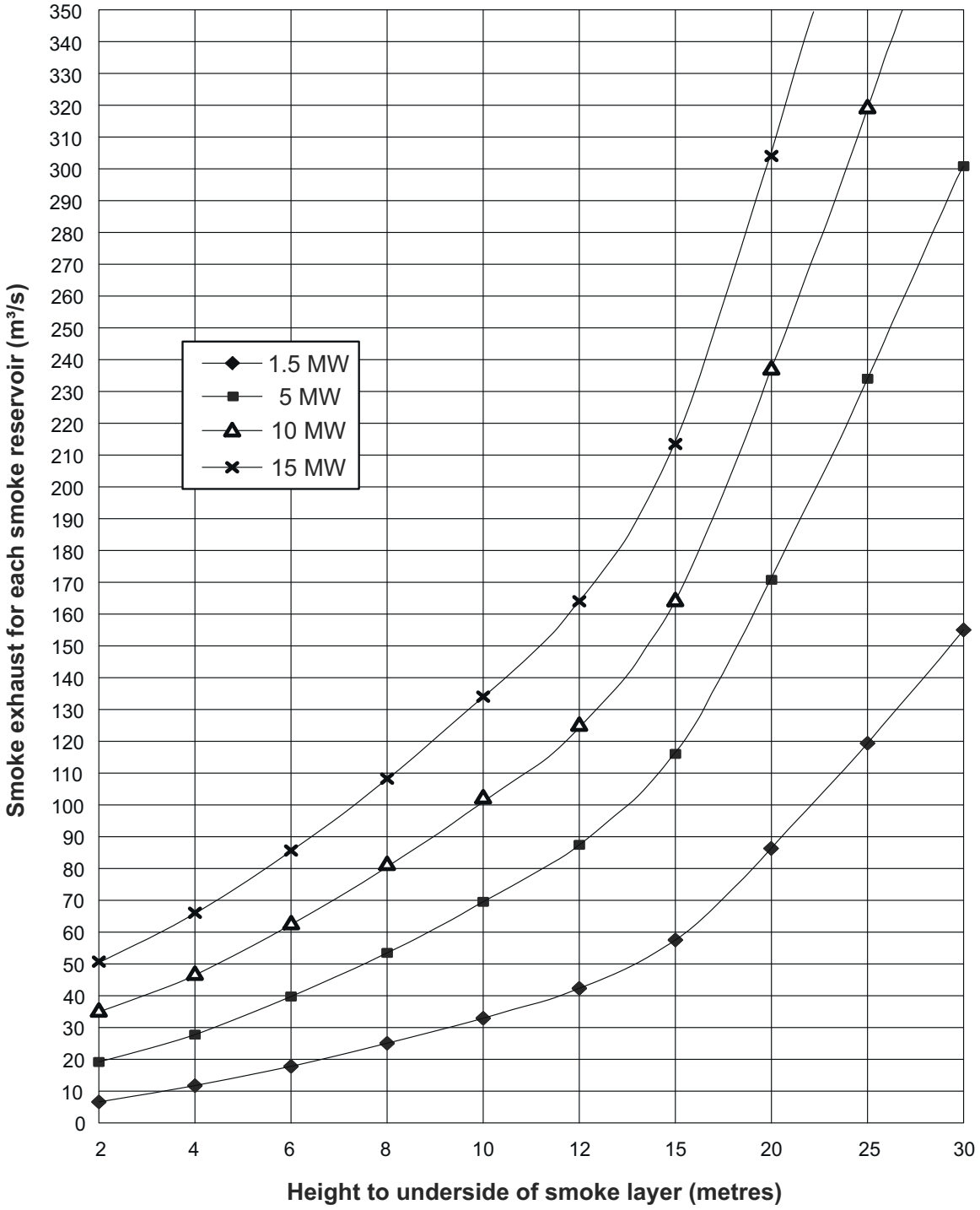

S21C3 Smoke exhaust fans

[2019: Spec E2.2b: 3]

Each smoke exhaust fan, complete with its drive, flexible connections, control gear and wiring must—

(a) be constructed and installed so that it is capable of continuous operation (exhausting the *required* volumetric flow rate at the installed system resistance) at a temperature of 200°C for a period of not less than 1 hour; and

(b) in a building not fitted with a sprinkler system, be capable of continuous operation at a temperature of 300°C for a period of not less than 30 minutes; and

(c) be rated to handle the *required* volumetric flow rate at ambient temperature to be capable of exhausting cool smoke during the early stages of a fire and to allow routine testing; and

(d) have any high temperature overload devices installed, *automatically* overridden during the smoke exhaust

operation.

S21C4 Smoke reservoirs

[2019: Spec E2.2b: 4]

(1) A *fire compartment* must be divided at ceiling level into smoke reservoirs formed by smoke baffles/curtains of *non-combustible* and non-shatterable construction.

(2) The horizontal area of a smoke reservoir must not exceed 2000 m^2 and in enclosed walkways and malls of a Class 6 building must not exceed 60 m in length.

(3) Smoke reservoirs must be of sufficient depth to contain the smoke layer and must not be less than 500 mm below an imperforate ceiling or roof.

(4) Within a multi-*storey fire compartment*—

(a) a *non-combustible* bulkhead or smoke baffle/curtain must be provided around the underside of each opening into a building void to minimise the spread of smoke to other *storeys*; and

(b) the depth of the bulkhead or smoke baffle must be not less than the depth of the smoke reservoir provided under (3) plus an additional 400 mm.

S21C5 Smoke exhaust fan and vent location

[2019: Spec E2.2b: 5]

Smoke exhaust fans and vents must be located—

(a) such that each smoke reservoir is served by one or more fans with the maximum exhaust rate at any one point limited to avoid extracting air from below the smoke layer; and

(b) to prevent the formation of stagnant regions resulting in excessive cooling and downward mixing of smoke; and

(c) at natural collection points for the hot smoky gases within each smoke reservoir having due regard to the ceiling geometry and its effect on the migratory path of the smoke; and

(d) away from the intersection of walkways or malls; and

(e) to ensure that any voids containing escalators and/or stairs commonly used by the public are not used as a smoke exhaust path; and

(f) to discharge directly to outdoor with a velocity of not less than 5 m/s, at a suitable point not less than 6 m from any air intake point or *exit*.

S21C6 Make-up air

[2019: Spec E2.2b: 6]

(1) Low level make-up air must be provided either *automatically* or via permanent ventilation openings to replace the air exhausted so as to minimise—

(a) any disturbance of the smoke layer due to turbulence created by the incoming air; and

(b) the risk of smoke migration to areas remote from the fire due to the effect of make-up air on the air balance of the total system.

(2) The velocity of make-up air through doorways must not exceed 2.5 m/s.

(3) Within a multi-*storey fire compartment*, make-up air must be provided across each vertical opening from a building void to the fire-affected *storey* at an average velocity of 1 m/s so as to minimise the spread of smoke from the fire-affected *storey* to other *storeys*.

S21C7 Smoke exhaust system control

[2019: Spec E2.2b: 7]

(1) Each smoke exhaust fan must be activated sequentially by smoke detectors complying with Specification 20 and arranged in zones to match the smoke reservoir served by the fan(s).

(2) Subject to (3) and (4), an air handling system (other than individual room units less than 1000 L/s and miscellaneous exhaust air systems installed in accordance with Sections 5 and 6 of AS 1668.1) which does not form part of the smoke hazard management system must be *automatically* shut down on the activation of the smoke exhaust system.

(3) In a single *storey fire compartment*, air handling systems in all non fire-affected zones may operate on 100% *outdoor air* to provide make-up air to the fire-affected zone.

(4) Within a multi-*storey fire compartment*, air handling systems in all non fire-affected zones and *storeys* must operate at 100% *outdoor air* to provide make-up air to the fire-affected *storey* via building voids connecting *storeys*.

(5) Manual override control and indication together with operating instructions for use by emergency personnel must be provided adjacent to the fire indicator panel in accordance with the requirements of clauses 4.11 and 4.13 of AS 1668.1.

(6) Manual control for the smoke exhaust system must also be provided at a location normally used by the *stage* manager in a theatre.

(7) Power supply wiring to exhaust fans together with detection, control, and indication circuits (and where necessary to *automatic* make-up air supply arrangements) must comply with AS 1668.1.

S21C8 Smoke detection

[2019: Spec E2.2b: 8]

A smoke detection system must be installed in accordance with Specification 20 to activate the smoke exhaust system.

Specification 22 Smoke-and-heat vents

S22C1 Scope

[New for 2022]

This Specification contains requirements for *automatic smoke-and-heat vents*.

S22C2 Adoption of AS 2665

[2019: Spec E2.2c: 1]

Automatic smoke-and-heat vents must be installed as a system complying with AS 2665 except that permanently open vents may form part of the smoke/heat venting system provided they comply with the relevant criteria for *automatic smoke-and-heat vents* in AS 2665.

S22C3 Controls

[2019: Spec E2.2c: 2]

Where a *smoke-and-heat vent* system is installed to comply with E2D14 to E2D20, then, in addition to thermally released link operation, *smoke-and-heat vents* must also be initiated by smoke detection complying with S20C6 and S20C8 and arranged in zones to match the smoke reservoirs.

Specification 23 Residential fire safety systems

S23C1 Scope

[2019: Spec E2.2d: 1]

This Specification describes the requirements for residential fire safety systems referenced in Specification 18.

S23C2 Application

[2019: Spec E2.2d: 1]

(1) Clauses S23C3 to S23C7—

(a) apply to Class 3 *residential care buildings*; and

(b) cover installation requirements for local fire indicator panels (or alarm panels) that provide information to staff when a fire alarm is activated.

(2) Clauses S23C8 and S23C9 describe requirements for connecting residential sprinkler systems in Class 2 and 3 buildings, or a *residential care building*, to a fire station or other approved monitoring service.

S23C3 General requirements

[2019: Spec E2.2d: 2(a)]

(1) The installation of a residential local fire alarm system must consist of a system of smoke alarms powered either—

(a) directly from the *low voltage* supply mains; or

(b) from an *extra-low voltage* power source originating at a local fire indicator panel with a battery back-up facility.

(2) A smoke detector complying with AS 1670.1 Clause 2.1.2(a)(ii), (xi) or (xv) may be substituted for a smoke alarm, provided an audible alarm device is associated with each detector.

(3) The sound pressure level provided by a warning device must be equivalent to that required in Clause 3.22 of AS 1670.1, except that the sound pressure level need not be measured inside a *sole-occupancy unit*, provided that a level of not less than 85 dB(A) is attained at the access door to the unit.

(4) The alarm system must be wired for *low voltage* or *extra-low voltage* wiring.

(5) The system must be designed so—

(a) an audible alarm is given in the area in which the smoke alarm activates; and

(b) visible and audible indication of an alarm is provided at the local fire indicator panel; and

(c) an audible alarm is given in any area (including sleeping quarters and staff outbuildings) set aside for staff use.

(6) The maximum number of smoke alarms on any one *alarm zone* must—

(a) be determined by the maximum current output rating of the system source; and

(b) not exceed 10.

(7) Each *alarm zone* must be located around a single central access passageway, corridor or similar thoroughfare, to enable staff to readily identify the source of the alarm.

(8) Where the smoke alarm is functionally dependent on an external power source—

(a) an audible fault signal must sound at the local fire indicator panel if that power source fails; and

(b) the local fire indicator panel must be permanently connected to a reliable 240 V separate *low voltage* final sub-circuit; and

(c) source power must be protected by a separate circuit breaker, or fuse, supplied from the live side of the main switch.

(9) The smoke alarm system is not required to be connected to a fire alarm monitoring system (refer to S18C3(2)(c)).

S23C4 Local fire indicator panel

[2019: Spec E2.2d: 2(b)]

(1) The local fire indicator panel must be located in a central area, such as a reception area, so that it is readily accessible by staff at all times.

(2) The local fire indicator panel must be *fixed wired*.

(3) The local fire indicator panel must incorporate the following:

(a) A suitable mains power supply with battery back-up (capable of operating the system for 12 hours) for the local fire indicator panel and *extra-low voltage* smoke alarms supplied directly from the local fire indicator panel.

(b) Terminals for input signal conductors from the smoke alarm and residential sprinkler system and, if the signal source is from a *low voltage* smoke alarm, external isolation must be provided.

(c) Visible indication of the *alarm zone* in which the actuating device is located.

(d) *Automatic* audible and visible indication of the following faults:

(i) A break in the wiring of any circuit between smoke alarms or *sprinkler alarm switch* and the local fire indicator panel.

(ii) Low battery condition.

(e) Automatic visible indication of mains power failure.

(f) Initiation of any ancillary control facilities such as smoke door release or air-conditioning shut-down.

(g) Local operation of individual smoke alarms, in the event of *alarm zone* isolation at the local fire indicator panel.

(4) If the local fire indicator panel is also used for other non-fire related purposes such as security, then these functions—

(a) must be on separate and distinct circuits; and

(b) when disabled or isolated, must not interfere with the operation of fire alarm circuitry.

(5) The local fire indicator panel must comply with AS 1670.1.

(6) The local fire indicator panel must have the capacity to incorporate heat detectors deemed suitable in accordance with AS 1670.1 on either the same or separate *alarm zones* as the smoke alarms.

S23C5 Smoke alarms

[2019: Spec E2.2d: 2(c)]

(1) *Extra-low voltage* smoke alarms must be compatible with the local fire indicator panel.

(2) *Low voltage* smoke alarms must be configured to send an output alarm signal to the local fire indicator panel.

(3) Unless there is internal isolation of the signal output conductors, they must at all times be treated as *low voltage* conductors.

S23C6 Signal isolation interface units

[2019: Spec E2.2d: 2(d)]

(1) Signal isolation interface units must isolate any *low voltage* connected to the smoke alarms from the local fire indicator panel.

(2) Signal isolation interface units must be certified by an *Accredited Testing Laboratory* as compatible with the specific types of smoke alarms used in the system.

(3) Signal isolation interface units must be accepted by the electricity supply authority.

(4) Units must be marked in a clearly visible location, with letters greater than or equal to 35 mm containing the following information:

SMOKE ALARM SIGNAL ISOLATION UNIT WARNING – 240 V

Isolate power supply before removing cover

S23C7 Wiring

[2019: Spec E2.2d: 2(e)]

(1) Smoke alarms and associated equipment must be *fixed wired* for *low voltage* or *extra-low voltage* wiring systems, as applicable.

(2) All *extra-low voltage* wiring must be red sheathed 0.6/1 kV stranded, with conductors having a cross sectional area of not less than 0.75 mm^2.

(3) Clear and concise "as-installed" single line drawings to a suitable scale, showing rooms, external and internal walls, fixed partitions, doorways etc., are to be provided for each installation at the local fire indicator panel.

(4) Drawings must also include the actual location of fire alarms, smoke alarms, sprinkler flow switches (where installed), alarm connection points and local fire indicator panel, to enable easy identification of alarm system elements and their relationship to the building layout.

(5) Symbols used in the drawings referred to in (4) must be as shown in Figures S23C7a, S23C7b, S23C7c, S23C7d, S23C7e or S23C7f.

Figure S23C7a: Flow switch symbol

Figure S23C7b: Heat detector symbol

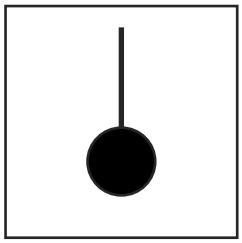

Figure S23C7c: Smoke detector symbol

Figure S23C7d: End-of-line device symbol

Figure S23C7e: Fire indicator panel symbol

Figure S23C7f: Smoke alarm symbol

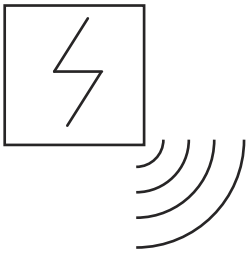

S23C8 Connection to monitoring service

[2019: Spec E2.2d: 3(a)]

(1) Connection of a residential sprinkler system to a fire station or other approved monitoring service must be via a *sprinkler alarm switch*, connected to alarm signalling equipment.

(2) The connection from the alarm signalling equipment must be in accordance with AS 1670.3.

(3) The alarm signalling equipment must be installed—

(a) in a secure, accessible position; and

(b) in a weatherproof housing, if located externally; and

(c) not more than 500 mm from the system flow switch.

S23C9 Indication at the fire indicator panel

[2019: Spec E2.2d: 3(b)]

The fire signal from the alarm signalling equipment must be mimicked by an audible and visible signal at the fire indicator panel.

Specification 24 Lift installations

S24C1 Scope

[2019: Spec E3.1: 1]

This Specification contains requirements for *electric passenger lift* installations and *electrohydraulic passenger lift* installations.

S24C2 Lift cars exposed to solar radiation

[2019: Spec E3.1: 2]

(1) A lift car exposed to solar radiation directly, or indirectly by re-radiation, must have—

(a) mechanical ventilation at a rate of one air change per minute; or

(b) mechanical cooling.

(2) A 2 hour alternative power source for ventilation or mechanical cooling at (1) must be provided in the event of normal power loss.

S24C3 Lift car emergency lighting

[2019: Spec E3.1: 3]

A lift car must have an emergency lighting system designed—

(a) to come on automatically upon failure of the normal lighting supply; and

(b) to provide at least 20 lux of lighting for 2 hours on the alarm initiation button.

S24C4 Cooling of lift shaft

[2019: Spec E3.1: 4]

While a lift in a lift *shaft* is in service, the cooling of the lift *shaft* must—

(a) ensure that the dry bulb air temperature in the lift *shaft* does not exceed 40°C; and

(b) if the cooling is by a ventilation system, be provided with an air change rate determined using a temperature rise of no more than 5 K.

S24C5 Lift foyer access

[2019: Spec E3.1: 5]

Where there is a security foyer in a building, access may be via locked security doors provided—

(a) security doors revert to the unlocked state in the event of—

(i) power failure; or

(ii) fire alarm; and

(b) locked foyer areas are monitored by closed circuit television and intercom system to a 24 hour staffed location.

S24C6 Emergency access doors in a single enclosed lift shaft

[2019: Spec E3.1: 6]

(1) Where a lift is installed in a single enclosed lift *shaft* having a distance between normal landing entrances greater than 12.2 m, emergency access doors must be provided and constructed as follows:

(a) The clear opening size of emergency doors must be not less than 600 mm wide x 980 mm high.

(b) Hinged doors must not open towards the interior of the lift *shaft*.

(c) Doors must be *self-closing* and self-locking.

(d) Doors must be marked on the landing side with the letters not less than 35 mm high:

DANGER LIFTWELL ACCESS

KEEP FURNITURE AND FIXTURES CLEAR

(e) Doors from the landing side must only be openable by a tool.

(f) Each emergency door must be provided with a positive breaking electrical contact, wired into the control circuit to prevent movement of the lift until the emergency door is both closed and locked.

(2) Emergency egress from the lift car must be provided in single enclosed lift *shafts* where—

(a) ropes are installed; and

(b) the vertical distance between the lift car sill and the landing door head is less than 600 mm; and

(c) the counterweight is resting on its fully compressed buffer.

(3) Emergency egress *required* by (2) must be in the form of an interlocked door with clear opening dimensions not less than 600 mm x 600 mm, accessible from the lift car entrance or the lift car roof (where the door is located in the wall of the lift *shaft*).

Specification 25 Photoluminescent exit signs

S25C1 Scope

[2019: Spec E4.8: 1]

This Specification contains requirements for photoluminescent *exit* signs.

S25C2 Application

[2019: Spec E4.8: 2]

A photoluminescent *exit* sign must comply with Section 5 and Appendix D of AS/NZS 2293.1, except where varied by this Specification.

S25C3 Illumination

[2019: Spec E4.8: 3]

A photoluminescent *exit* sign must—

(a) be maintained in a continuously charged state by a minimum illumination of 100 lux at the face of the sign by a dedicated light source with a colour temperature not less than 4000 K; and

(b) in the event of a power failure, continue to provide a minimum luminance of 30 mcd/m^2 for not less than 90 minutes; and

(c) have its performance verified by testing in accordance with ASTM E2073-10, except the activation illumination in clause 8.3 is replaced with 54 lux.

S25C4 Pictorial elements

[2019: Spec E4.8: 4]

Pictorial elements on a photoluminescent *exit* sign must—

(a) where the colour white is used, be replaced with a photoluminescent material; and

(b) be not less than 1.3 times larger than that specified in Table 5.1 of AS/NZS 2293.1; and

(c) have a border of photoluminescent material that extends not less than 15 mm beyond the pictorial elements.

S25C5 Viewing distance

[2019: Spec E4.8: 5]

The maximum viewing distance in clause 5.6 of AS/NZS 2293.1 must not be more than 24 m.

S25C6 Smoke control systems

[2019: Spec E4.8: 6]

Smoke control systems required by clause 5.3 of AS/NZS 2293.1 do not apply to a photoluminescent *exit* sign.

Section F Health and amenity

Part F1 Surface water management, rising damp and external waterproofing

Objectives

F1O1 Objective

Functional Statements

F1F1 Protection from redirected surface water

F1F2 Resistance to rain, surface water and ground water

Performance Requirements

F1P1 Managing rainwater impact on adjoining properties

F1P2 Preventing rainwater from entering buildings

F1P3 Rainwater drainage systems

F1P4 Rising damp

Deemed-to-Satisfy Provisions

F1D1 Deemed-to-Satisfy Provisions

F1D2 Application of Part

F1D3 Stormwater drainage

F1D4 Exposed joints

F1D5 External waterproofing membranes

F1D6 Damp-proofing

F1D7 Damp-proofing of floors on the ground

F1D8 Subfloor ventilation

Part F2 Wet areas and overflow protection

Objectives

F2O1 Objective

Functional Statements

F2F1 Wet areas

F2F2 Overflow from bathrooms and laundries

Performance Requirements

F2P1 Wet area overflows

F2P2 Wet areas

Verification Methods

F2V1 Overflow protection

Deemed-to-Satisfy Provisions

F2D1 Deemed-to-Satisfy Provisions

F2D2 Wet area construction

F2D3 Rooms containing urinals

F2D4 Floor wastes

Part F3 Roof and wall cladding

Objectives

F3O1 Objective

Functional Statements

F3F1 Roof and wall cladding

Performance Requirements

F3P1 Weatherproofing

Verification Methods

F3V1 Weatherproofing

Deemed-to-Satisfy Provisions

F3D1 Deemed-to-Satisfy Provisions

F3D2 Roof coverings

F3D3 Sarking

F3D4 Glazed assemblies

F3D5 Wall cladding

Part F4 Sanitary and other facilities

Objectives

F4O1 Objectives

Functional Statements

F4F1 Sanitary facilities

F4F2 Laundry facilities

F4F3 Food preparation facilities

F4F4 Removal of unconscious occupant

Performance Requirements

F4P1 Personal hygiene facilities

F4P2 Laundry facilities

F4P3 Kitchen facilities

F4P4 Disposal of contaminated water from containers

F4P5 Construction of sanitary compartments to allow removal of unconscious people

F4P6 Microbial control for water systems

Verification Methods

F4V1 Sanitary facilities

Deemed-to-Satisfy Provisions

F4D1 Deemed-to-Satisfy Provisions

F4D2 Facilities in residential buildings

F4D3 Calculation of number of occupants and facilities

F4D4 Facilities in Class 3 to 9 buildings

F4D5 Accessible sanitary facilities

F4D6 Accessible unisex sanitary compartments

F4D7 Accessible unisex showers

F4D8 Construction of sanitary compartments

F4D9 Interpretation: urinals and washbasins

F4D10 Microbial (legionella) control

F4D11 Waste management

F4D12 Accessible adult change facilities

Part F5 Room heights

Objectives

F5O1 Objective

Functional Statements

F5F1 Room or space heights

Performance Requirements
F5P1 Room or space heights
Verification Methods
F5V1 Room or space heights
Deemed-to-Satisfy Provisions
F5D1 Deemed-to-Satisfy Provisions
F5D2 Height of rooms and other spaces

Part F6 **Light and ventilation**

Objectives
F6O1 Objective
Functional Statements
F6F1 Natural light
F6F2 Artificial light
F6F3 Ventilation
Performance Requirements
F6P1 Natural lighting
F6P2 Artificial lighting
F6P3 Outdoor air supply
F6P4 Mechanical ventilation to control odours and contaminants
F6P5 Disposal of contaminated air
Verification Methods
F6V1 Verification of suitable indoor air quality
F6V2 Verification of suitable indoor air quality for carparks
F6V3 Verification of suitable provision of natural light
Deemed-to-Satisfy Provisions
F6D1 Deemed-to-Satisfy Provisions
F6D2 Provision of natural light
F6D3 Methods and extent of natural light
F6D4 Natural light borrowed from adjoining room
F6D5 Artificial lighting
F6D6 Ventilation of rooms
F6D7 Natural ventilation
F6D8 Ventilation borrowed from adjoining room
F6D9 Restriction on location of sanitary compartments
F6D10 Airlocks
F6D11 Carparks
F6D12 Kitchen local exhaust ventilation

Part F7 **Sound transmission and insulation**

Objectives
F7O1 Objective
Functional Statements
F7F1 Sound transmission and insulation
Performance Requirements
F7P1 Sound transmission through floors
F7P2 Sound transmission through walls

F7P3	Sound transmission through floors in a residential care building
F7P4	Sound transmission through walls in a residential care building
Verification Methods	
F7V1	Sound transmission through floors [F7P1]
F7V2	Sound transmission through walls [F7P2(a)]
F7V3	Sound transmission through floors [F7P3]
F7V4	Sound transmission through walls [F7P4(1)(a) and (2)]
Deemed-to-Satisfy Provisions	
F7D1	Deemed-to-Satisfy Provisions
F7D2	Application of Part
F7D3	Determination of airborne sound insulation ratings
F7D4	Determination of impact sound insulation ratings
F7D5	Sound insulation rating of floors
F7D6	Sound insulation rating of walls
F7D7	Sound insulation rating of internal services
F7D8	Sound isolation of pumps
Part F8	**Condensation management**
Objectives	
F8O1	Objective
Functional Statements	
F8F1	Condensation
Performance Requirements	
F8P1	Condensation and water vapour management
Verification Methods	
F8V1	Condensation management
Deemed-to-Satisfy Provisions	
F8D1	Deemed-to-Satisfy Provisions
F8D2	Application of Part
F8D3	External wall construction
F8D4	Exhaust systems
F8D5	Ventilation of roof spaces
Specification 26	**Waterproofing and water-resistance requirements for building elements in wet areas**
S26C1	Scope
S26C2	Application
S26C3	Shower area (enclosed and unenclosed)
S26C4	Area outside shower area
S26C5	Areas adjacent to baths and spas without showers
S26C6	Other areas
Specification 27	**Accessible adult change facilities**
S27C1	Scope
S27C2	General requirements
S27C3	Hoist
S27C4	Toilet pan, seat, backrest and grabrails
S27C5	Washbasin and tap

	S27C6	Fixtures and fittings
	S27C7	Change table
	S27C8	Changing rails
	S27C9	Door and door controls
	S27C10	Signage
	S27C11	Operating instructions
Specification 28	**Sound insulation for building elements**	
	S28C1	Scope
	S28C2	Discontinuous construction
	S28C3	Construction Deemed-to-Satisfy
	S28C4	Acceptable forms of construction for walls — masonry
	S28C5	Acceptable forms of construction for walls — concrete
	S28C6	Acceptable forms of construction for walls — autoclaved aerated concrete
	S28C7	Acceptable forms of construction for walls — timber and steel framing
	S28C8	Acceptable forms of construction for floors — concrete
	S28C9	Acceptable forms of construction for floors — autoclaved aerated concrete
	S28C10	Acceptable forms of construction for floors — timber
Specification 29	**Impact sound – test of equivalence**	
	S29C1	Scope
	S29C2	Construction to be tested
	S29C3	Method

Part F1 Surface water management, rising damp and external waterproofing

Introduction to this Part

This Part is intended to minimise the risk of water leaking into or accumulating within a building and causing unhealthy conditions or damaging building elements by corrosion or rot. It is also intended to prevent water redirected away from the building damaging nearby properties.

Objectives

F1O1 Objective

[2019: FO1]

The Objective of this Part is to—

(a) safeguard occupants from illness or injury and protect the building from damage caused by—

(i) *surface water*; and

(ii) external moisture entering a building; and

(iii) the accumulation of internal moisture in a building; and

(b) protect *other property* from damage caused by redirected *surface water*.

Functional Statements

F1F1 Protection from redirected surface water

[2019: FF1.1]

A building, including any associated *sitework*, is to be constructed in a way that protects people and *other property* from the adverse effects of redirected *surface water*.

F1F2 Resistance to rain, surface water and ground water

[2019: FF1.2]

A building is to be constructed to provide resistance to moisture penetrating from the outside, including rising from the ground.

Performance Requirements

F1P1 Managing rainwater impact on adjoining properties

[2019: FP1.1]

Surface water, resulting from a storm having an *annual exceedance probability* of 5% and which is collected or concentrated by a building or *sitework*, must be disposed of in a way that avoids the likelihood of damage or nuisance to any *other property*.

F1P2 Preventing rainwater from entering buildings

[2019: FP1.2]

Surface water, resulting from a storm having an *annual exceedance probability* of 1%, must not enter the building.

Limitations

F1P2 does not apply to—

(a) a Class 7 or 8 building where in the particular case there is no necessity for compliance; or

(b) a garage, tool shed, *sanitary compartment*, or the like, forming part of a building used for other purposes; or

(c) an *open spectator stand* or *open-deck carpark*.

F1P3 Rainwater drainage systems

[2019: FP1.3]

A drainage system for the disposal of *surface water* resulting from a storm having an *annual exceedance probability* of—

(a) 5% must—

(i) convey *surface water* to an appropriate *outfall*; and

(ii) avoid *surface water* damaging the building; and

(b) 1% must avoid the entry of *surface water* into a building.

SA F1P4

F1P4 Rising damp

[2019: FP1.5]

Moisture from the ground must be prevented from causing—

(a) undue dampness or deterioration of building elements; and

(b) unhealthy or dangerous conditions, or loss of *amenity* for occupants.

Limitations

F1P4 does not apply to—

(a) a Class 7 or 8 building where in the particular case there is no necessity for compliance; or

(b) a garage, tool shed, *sanitary compartment*, or the like, forming part of a building used for other purposes; or

(c) an *open spectator stand* or *open-deck carpark*.

Deemed-to-Satisfy Provisions

F1D1 Deemed-to-Satisfy Provisions

[2019: F1.0]

SA F1D1(1)

(1) Where a *Deemed-to-Satisfy Solution* is proposed, *Performance Requirements* F1P1 to F1P4 are satisfied by complying with F1D2 to F1D8.

(2) Where a *Performance Solution* is proposed, the relevant *Performance Requirements* must be determined in accordance with A2G2(3) and A2G4(3) as applicable.

F1D2 Application of Part

[New for 2022]

(1) F1D4 and F1D5 do not apply to a roof with a covering complying with F3D2(a) to (d).

(2) F1D3 to F1D5 do not apply to a balcony, podium or similar horizontal surface part of a building—

(a) where the flooring is of timber decking or other perforated flooring; or

(b) which is located directly above ground.

F1D3 Stormwater drainage

[2019: F1.1]

Stormwater drainage must be designed and constructed in accordance with AS/NZS 3500.3.

Explanatory Information

Where stormwater drainage does not comply with F1D3, a *Performance Solution* is to be used to demonstrate compliance with the relevant *Performance Requirements*.

F1D4 Exposed joints

[New for 2022]

Exposed joints in the drainage surface on a roof, balcony, podium or similar horizontal surface part of a building must—

(a) be protected in accordance with Section 2.9 of AS 4654.2; and

(b) not be located beneath or run through a planter box, water feature or similar part of the building.

Notes

For the purposes of F1D4, an exposed joint is a construction joint, control joint, expansion joint, contraction joint or movement joint and includes an exposed joint which is directly below a drainage surface.

Explanatory Information: Location of exposed joints

To minimise the potential of water ingress, the exposed joint should be located at a ridge or high point of the structural substrate, where possible.

Explanatory Information: Exposed joints subject to excessive movement

Where an exposed joint is subject to excessive movement, such as more than 10 mm, additional measures should be considered to ensure protection of the exposed joint. These additional measures may include use of a hob with a minimum height of 50 mm formed within the structural substrate for the full length of both sides of the exposed joint, and the exposed joint protected by a discontinuous *membrane* in accordance with Section 2.9 of AS 4654.2.

F1D5 External waterproofing membranes

[2019: F1.4]

A roof, balcony, podium or similar horizontal surface part of a building must be provided with a *waterproofing membrane*—

(a) consisting of materials complying with AS 4654.1; and

(b) designed and installed in accordance with AS 4654.2.

F1D6 Damp-proofing

[2019: F1.9]

(1) Except for a building covered by (3), moisture from the ground must be prevented from reaching—

(a) the lowest floor timbers and the walls above the lowest floor joists; and

(b) the walls above the *damp-proof course*; and

(c) the underside of a suspended floor constructed of a material other than timber, and the supporting beams or girders.

SA F1D6(2)

(2) Where a *damp-proof course* is provided, it must consist of—

(a) a material that complies with AS/NZS 2904; or

(b) impervious sheet material in accordance with AS 3660.1.

(3) The following buildings need not comply with (1):

(a) A Class 7 or 8 building where in the particular case there is no necessity for compliance.

(b) A garage, tool shed, *sanitary compartment*, or the like, forming part of a building used for other purposes.

(c) An *open spectator stand* or *open-deck carpark*.

SA F1D7

F1D7 Damp-proofing of floors on the ground

[2019: F1.10]

(1) If a floor of a room is laid on the ground or on fill, moisture from the ground must be prevented from reaching the upper surface of the floor and adjacent walls by the insertion of a vapour barrier in accordance with AS 2870.

(2) The requirements of (1) do not apply where—

(a) weatherproofing is not *required*; or

(b) the floor is the base of a stair, lift or similar *shaft* which is adequately drained by gravitation or mechanical means.

F1D8 Subfloor ventilation

[2019: F1.12]

(1) Subfloor spaces must—

(a) be provided with openings in *external walls* and internal subfloor walls in accordance with Table F1D8 for the climatic zones given in Figure F1D8; and

(b) have clearance between the ground surface and the underside of the lowest horizontal member in the subfloor in accordance with Table F1D8.

(2) In addition to (1), a subfloor space must—

(a) be cleared of all building debris and vegetation; and

(b) have the ground beneath the suspended floor graded to prevent *surface water* ponding under the building; and

(c) contain no dead air spaces; and

(d) have openings evenly spaced as far as practicable; and

(e) have openings placed not more than 600 mm in from corners.

(3) In double leaf masonry walls, openings specified in (1) must be provided in both leaves of the masonry, with openings being aligned to allow an unobstructed flow of air.

(4) Openings in internal subfloor walls specified in (1) must have an unobstructed area equivalent to that *required* for the adjacent external openings.

(5) Where the ground or subfloor space is excessively damp or subject to frequent flooding, in addition to the requirements

of (1) to (4)—

(a) the subfloor ventilation *required* in (1) must be increased by 50%; or

(b) the ground within the subfloor space must be sealed with an impervious *membrane*; or

(c) subfloor framing must be—

(i) where above ground, above-ground durability Class 1 or 2 timbers or H3 preservative treated timbers in accordance with AS 1684.2, AS 1684.3 or AS 1684.4; or

(ii) where in ground, in-ground durability Class 1 or 2 timbers or H5 preservative treated timbers in accordance with AS 1684.2, AS 1684.3 or AS 1684.4; or

(iii) steel in accordance with NASH Standard 'Residential and Low-Rise Steel Framing' Part 2.

Table F1D8: Subfloor openings and ground clearance

Climatic zone (see Figure F1D8)	Minimum aggregate subfloor ventilation openings without a *membrane* (mm^2/m of wall)	Minimum aggregate subfloor ventilation openings having the ground sealed with an impervious *membrane* (mm^2/m of wall)	Minimum ground clearance height where termite inspection or management system is not required (mm)	Minimum ground clearance height where termite inspection is required (mm) Note 1
A	2000	1000	150	400
B	4000	2000	150	400
C	6000	3000	150	400

Table Notes

(1) 400 mm clearance *required* only where termite management systems are installed that need to be inspected (see B1D4).

(2) On sloping sites, the 400 mm clearance *required* by (1) may be reduced to 150 mm within 2 m of *external walls*.

(3) In situations where openings in *external walls* and internal subfloor walls are not able to be provided, additional measures must be provided to ensure that the overall level of ventilation of the subfloor space is maintained.

(4) Additional measures referred to in (3) may include measures similar to those in F1D8(5), such as providing durability class timbers, or having the ground sealed in the subfloor space with an impervious *membrane*.

Figure F1D8: Climatic zones based on relative humidity

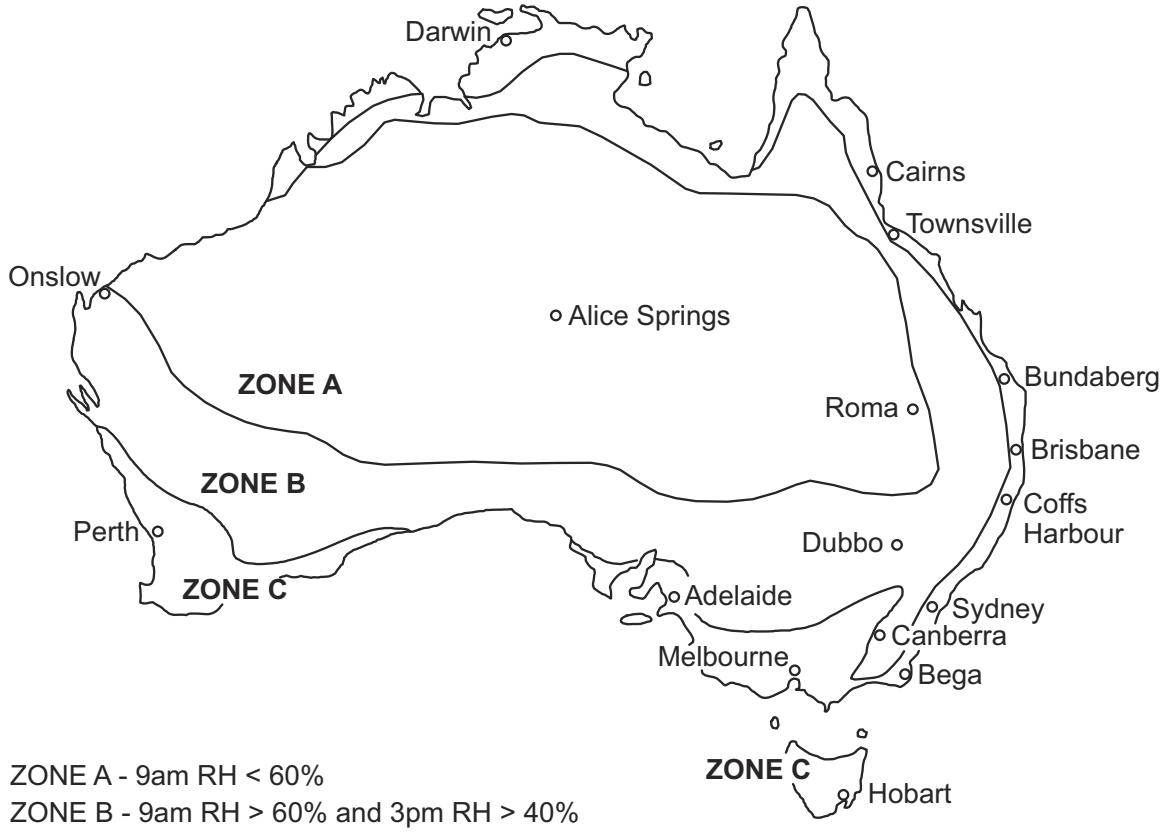

ZONE A - 9am RH < 60%
ZONE B - 9am RH > 60% and 3pm RH > 40%
ZONE C - 9am RH > 70% and 3pm RH > 60%
RH = Relative Humidity

Figure Notes

The season with the highest relative humidity is used. Generally this will be July for southern Australia and January for northern Australia.

Part F2 Wet areas and overflow protection

Introduction to this Part

This Part is intended to minimise the risk of water from internal *wet areas* accumulating within a building and causing musty, damp or unhealthy conditions or damaging building elements by corrosion or other degradation. It is also intended to prevent water from internal parts of a building causing damage to *other property* or parts of a building.

Objectives

F2O1 Objective

[New for 2022]

The Objective of this Part is to—

(a) safeguard occupants from illness or injury and protect buildings from damage caused by—

(i) internal water from *wet areas*; and

(ii) the accumulation of internal moisture in the building; and

(b) protect *other property* from damage caused by redirected internal water from *wet areas*.

Functional Statements

F2F1 Wet areas

[New for 2022]

A building including internal *wet areas* is to be constructed in a way that protects people, the building and *other property* from the adverse effects of internal water from *wet areas*.

F2F2 Overflow from bathrooms and laundries

[2019: FF1.3]

A building is to be constructed to avoid the likelihood of—

(a) the creation of unhealthy or dangerous conditions; and

(b) damage to building elements,

caused by dampness or water overflow from bathrooms, laundries and the like.

Performance Requirements

SA F2P1

F2P1 Wet area overflows

[2019: FP1.6]

Overflow from a bathroom, laundry facility or the like must be prevented from penetrating to—

(a) another *sole-occupancy unit* used for sleeping accommodation; and

(b) a public space,

in a *storey* below in the same building.

F2P2 Wet areas

[2019: FP1.7]

To protect the structure of the building and to maintain the *amenity* of the occupants, water must be prevented from penetrating—

(a) behind fittings and linings; and

(b) into concealed spaces,

of *sanitary compartments*, bathrooms, laundries and the like.

SA F2P3

Verification Methods

F2V1 Overflow protection

[2019: FV1.2]

Compliance with F2P1 is verified when the flow rate of the in-built overflow for all *vessels* in the room is greater than the flow rate of the source filling the *vessel*.

Applications

F2V1 only applies to bathrooms, laundries and the like in a Class 2 or 3 building or a Class 4 part of a building.

Deemed-to-Satisfy Provisions

F2D1 Deemed-to-Satisfy Provisions

[New for 2022]

(1) Where a *Deemed-to-Satisfy Solution* is proposed, *Performance Requirements* F2P1 and F2P2 are satisfied by complying with F2D2 to F2D4.

(2) Where a *Performance Solution* is proposed, the relevant *Performance Requirements* must be determined in accordance with A2G2(3) and A2G4(3) as applicable.

F2D2 Wet area construction

[2019: F1.7(a) and (b)]

SA F2D2(1)

(1) In a Class 2 and 3 building and a Class 4 part of a building, building elements in *wet areas* must—

(a) be *water resistant* or *waterproof* in accordance with Specification 26; and

(b) comply with AS 3740.

(2) In a Class 5, 6, 7, 8 or 9 building, building elements in a bathroom or shower room, a slop hopper or sink compartment, a laundry or *sanitary compartment* must—

(a) be *water resistant* or *waterproof* in accordance with Specification 26; and

(b) comply with AS 3740,

as if they were in a Class 2 or 3 building or a Class 4 part of a building.

F2D3 Rooms containing urinals

[2019: F1.7(c), (d) and (e)]

(1) Where a slab or stall type urinal is installed—

(a) the floor surface of the room containing the urinal must be an impervious material; and

(i) where no step is installed, must—

(A) be graded to the urinal channel for a distance of 1.5 m from the urinal channel; and

(B) have the remainder of the floor graded to a *floor waste*; and

(ii) where a step is installed—

(A) the step must have an impervious surface and be graded to the urinal channel; and

(B) the floor behind the step must be graded to a *floor waste*; and

(b) the junction between the floor surface and the urinal channel must be impervious.

(2) Where a wall hung urinal is installed—

(a) the wall must be surfaced with impervious material extending from the floor to not less than 50 mm above the top of the urinal and not less than 225 mm on each side of the urinal; and

(b) the floor must be surfaced with an impervious material and be graded to a *floor waste*.

(3) In a room with timber or steel-framed walls and containing a urinal—

(a) the wall must be surfaced with an impervious material extending from the floor to not less than 100 mm above the floor surface; and

(b) the junction of the floor surface and the wall surface must be impervious.

SA F2D4

F2D4 Floor wastes

[2019: F1.11]

(1) In a Class 2 or 3 building or Class 4 part of a building, a bathroom or laundry located at any level above a *sole-occupancy unit* or public space must have a *floor waste*.

(2) Where a *floor waste* is installed—

(a) the minimum continuous fall of a floor plane to the waste must be 1:80; and

(b) the maximum continuous fall of a floor plane to the waste must be 1:50.

Part F3 Roof and wall cladding

Introduction to this Part

This Part is intended to minimise the risk of water, including *surface water* and rainwater, entering the building and causing musty, damp and unhealthy conditions or damaging building elements by corrosion or other degradation. It is also intended to prevent water redirected away from the outside of the building damaging nearby properties.

Objectives

F3O1 Objective

[New for 2022]

The Objective of this Part is to—

(a) safeguard occupants from illness or injury and protect buildings from damage caused by—

(i) ingress of water from outside the building; and

(ii) the accumulation of internal moisture in the building.

Functional Statements

F3F1 Roof and wall cladding

[New for 2022]

A building is to be constructed to prevent penetration of water from the outside.

Performance Requirements

F3P1 Weatherproofing

[2019: FP1.4]

A roof and *external wall* (including openings around *windows* and doors) must prevent the penetration of water that could cause—

(a) unhealthy or dangerous conditions, or loss of *amenity* for occupants; and

(b) undue dampness or deterioration of building elements.

Limitations

F3P1 does not apply to—

(a) a Class 7 or 8 building where in the particular case there is no necessity for compliance; or

(b) a garage, tool shed, *sanitary compartment*, or the like, forming part of a building used for other purposes; or

(c) an *open spectator stand* or *open-deck carpark*.

Verification Methods

F3V1 Weatherproofing

[2019: FV1.1]

(1) Compliance with F3P1 for weatherproofing of an *external wall* is verified when—

(a) a prototype passes the procedure described in (2); and

(b) the *external wall*—

(i) has a risk score of 20 or less, when the sum of all risk factor scores are determined in accordance with Table F3V1a; and

(ii) is not subjected to an ultimate limit state wind pressure of more than 2.5 kPa; and

(iii) includes only *windows* that comply with AS 2047.

(2) The test procedure referred to in (1)(a) must be as follows:

(a) The test specimen is in accordance with the requirements of (3).

(b) The test procedure is in accordance with the requirements of (4) or (5) as applicable.

(c) The test specimen does not fail the criteria in (6).

(d) The test is recorded in accordance with the requirements of (7).

(3) Test specimen: The test specimen must incorporate—

(a) representative samples of openings and joints, including—

(i) vertical and horizontal control joints; and

(ii) wall junctions; and

(iii) *windows* or doors; and

(iv) electrical boxes; and

(v) balcony drainage and parapet flashings; and

(vi) footer and header termination systems; and

(b) for a *cavity wall*—

(i) a transparent material for a proportion of the internal wall lining (to provide an unobstructed view of the *external wall* cladding) with sufficient structural capability and similar air tightness to resist the applied wind pressures; and

(ii) a 15 mm diameter hole in the internal wall lining below a *window*.

(4) The test procedure for a *direct fix cladding wall* or *unique wall* must be as follows:

(a) Apply 100% positive and negative serviceability wind pressures to the external face of the test specimen for a period of not less than 1 minute each.

(b) Apply static pressure of either 300 Pa or 30% serviceability wind pressure, whichever is higher, in accordance with the water penetration test procedure at clause 8.5.2 of AS/NZS 4284.

(c) Apply cyclic pressure in accordance with—

(i) the three stages of Table F3V1b; and

(ii) the water penetration test procedure at clause 8.6.2 of AS/NZS 4284.

(5) The test procedure for a *cavity wall* must be as follows:

(a) Apply 100% positive and negative serviceability wind pressures to the external face of the test specimen for a period of not less than 1 minute each.

(b) Apply static pressure of either 300 Pa or 30% serviceability wind pressure, whichever is higher, in accordance with the water penetration test procedure at clause 8.5.2 of AS/NZS 4284.

(c) Apply cyclic pressure in accordance with—

(i) stage 3 of Table F3V1b; and

(ii) the water penetration test procedure at clause 8.6.2 of AS/NZS 4284.

(d) To simulate the failure of the primary weather-defence or sealing, the following procedure must be applied to the test specimen:

(i) Insert 6 mm diameter holes through the external face of the *cavity wall* in all places specified below:

(A) Wall/*window* or wall/door junctions at ¾ height.

(B) Immediately above the head flashing.

(C) Through external sealing of the horizontal and vertical joints.

(D) Above any other penetration detail not covered by (A) to (C).

(ii) Repeat the static and cyclic pressure tests of (b) and (c).

(iii) Within 30 minutes of the completion of (ii), remove the internal lining of the *cavity wall* and check for compliance with (6).

(iv) With the internal lining removed, apply a final static pressure test at 50 Pa for a period of 15 minutes.

(6) Compliance is determined as follows:

(a) A *direct fix cladding wall* and *unique wall* are verified for compliance with F3P1 if there is no presence of water on the inside surface of the facade.

(b) A *cavity wall* is verified for compliance with F3P1 if there is no presence of water on the removed surface of the *cavity*, except that during the simulation of the failure of the primary weather-defence or sealing, water may—

(i) transfer to the removed surface of the *cavity* due to the introduced defects (6 mm holes); and

(ii) contact, but not pool on, battens and other cavity surfaces.

(7) The test report must include the following information:

(a) Name and address of the person supervising the test.

(b) Test report number.

(c) Date of the test.

(d) Cladding manufacturer's name and address.

(e) Construction details of the test specimen, including a description, and drawings and details of the components, showing modifications, if any.

(f) Test sequence with the pressures used in all tests.

(g) For each of the static and cyclic pressure tests, full details of all leakages, including position, extent and timing.

Table F3V1a: Risk factors and scores

Risk factor	Category	Risk severity	Score
Wind region	Region A0-5 (AS/NZS 1170.2)	Low to medium	0
	Region B1-2 (AS/NZS 1170.2)		
	Region C (AS/NZS 1170.2)	High	1
	Region D (AS/NZS 1170.2)	Very high	2
Number of *storeys*	One *storey*	Low	0
	Two *storeys* in part	Medium	1
	Two *storeys*	High	2
	More than two *storeys*	Very high	4
Roof/wall junctions	Roof-to-wall junctions fully protected	Low	0
	Roof-to-wall junctions partially exposed	Medium	1
	Roof-to-wall junctions fully exposed	High	3
	Roof elements finishing within the boundaries formed by the *external walls*	Very high	5
Eaves width	More than 600 mm for single *storey*	Low	0
	451-600 mm for single *storey*	Medium	1
	More than 600 mm for two *storey*		
	101-450 mm for single *storey*	High	2

Risk factor	Category	Risk severity	Score
	451-600 mm for two *storey*		
	More than 600 mm for above two *storey*		
	0-100 mm for single *storey*	Very high	5
	0-450 mm for two *storey*		
	Less than 600 mm for above two *storey*		
Envelope complexity	Simple shape with single cladding type	Low	0
	Complex shape with not more than two cladding types	Medium	1
	Complex shape with more than two cladding types	High	3
	As for high risk but with fully exposed roof-to-wall junctions	Very high	6
Decks, porches and balconies	None	Low	0
	Timber slat deck or porch at ground level		
	Fully covered in plan view by roof	Medium	2
	Timber slat deck attached at first or second floor level		
	Balcony exposed in plan view at first floor level	High	4
	Balcony cantilevered at first floor level		
	Balcony exposed in plan view at second floor level or above	Very high	6
	Balcony cantilevered at second floor level or above		

Table Notes

(1) Eaves width is measured horizontally from the external face of any wall cladding to the outer edge of any overhang, including fascia and external gutters.

(2) Barriers to prevent falling and parapets are considered as 0 mm eaves.

Table F3V1b: Cyclic pressure

Stage number	Serviceability wind pressure (%)	
	Min	Max
1	15	30
2	20	40
3	30	60

Deemed-to-Satisfy Provisions

F3D1 Deemed-to-Satisfy Provisions

[New for 2022]

(1) Where a *Deemed-to-Satisfy Solution* is proposed, *Performance Requirement* F3P1 is satisfied by complying with F3D2 to F3D5.

(2) Where a *Performance Solution* is proposed, the relevant *Performance Requirements* must be determined in accordance with A2G2(3) and A2G4(3) as applicable.

F3D2 Roof coverings

[2019: F1.5]

A roof must be covered with—

(a) roof tiles complying with AS 2049, fixed in accordance with AS 2050; or

(b) metal sheet roofing complying with AS 1562.1; or

(c) plastic sheet roofing designed and installed in accordance with AS 1562.3; or

(d) terracotta, fibre-cement and timber slates and shingles designed and installed in accordance with AS 4597, except in cyclonic areas; or

(e) an external waterproofing *membrane* complying with F1D5.

F3D3 Sarking

[2019: F1.6]

Sarking-type material used for weatherproofing of roofs and walls must comply with AS 4200.1 and AS 4200.2.

F3D4 Glazed assemblies

[2019: F1.13]

(1) Subject to (2) and (3), the following glazed assemblies in an *external wall*, must comply with AS 2047 requirements for resistance to water penetration:

(a) Windows.

(b) Sliding and swinging glazed doors with a frame, including French and bi-fold doors with a frame.

(c) Adjustable louvres.

(d) Shopfronts.

(e) Window walls with one piece framing.

(2) The following buildings need not comply with (1):

(a) A Class 7 or 8 building where in the particular case there is no necessity for compliance.

(b) A garage, tool shed, *sanitary compartment*, or the like, forming part of a building used for other purposes, except where the construction of the garage, tool shed, *sanitary compartment* or the like contributes to the weatherproofing of the other part of the building.

(c) An *open spectator stand* or *open-deck carpark*.

(3) The following glazed assemblies need not comply with (1):

(a) All glazed assemblies not in an *external wall*.

(b) Revolving doors.

(c) Fixed louvres.

(d) Skylights, roof lights and windows in other than the vertical plane.

(e) Sliding and swinging glazed doors without a frame.

(f) Windows constructed on site and architectural one-off windows, which are not design tested in accordance with AS 2047.

(g) Second-hand windows, re-used windows and recycled windows.

(h) Heritage windows.

F3D5 Wall cladding

[New for 2022]

(1) External wall cladding must comply with one or a combination of the following:

(a) Masonry, including masonry veneer, unreinforced and reinforced masonry: AS 3700.

(b) Autoclaved aerated concrete: AS 5146.3.

(c) Metal wall cladding: AS 1562.1.

(2) The following buildings need not comply with (1):

(a) A Class 7 or 8 building where in the particular case there is no necessity for compliance.

(b) A garage, tool shed, *sanitary compartment*, or the like, forming part of a building used for other purposes, except where the construction of the garage, tool shed, *sanitary compartment* or the like contributes to the weatherproofing of another part of the building that is *required* to be weatherproofed.

(c) An *open spectator stand* or *open deck carpark*.

Part F4 Sanitary and other facilities

Introduction to this Part

This Part focuses on reducing risk of illness and loss of *amenity* due to inadequate toilets, bathrooms and laundries, on ensuring occupants in residential buildings have access to a kitchen, and on microbial control in air-conditioning and *heated water* systems.

Objectives

F4O1 Objectives

[2019: FO2]

The Objective of this Part is to—

(a) safeguard occupants from illness caused by infection; and

(b) safeguard occupants from loss of *amenity* arising from the absence of adequate personal hygiene facilities; and

(c) enable occupants to carry out laundering; and

(d) provide for facilities to enable food preparation; and

(e) enable unconscious occupants of *sanitary compartments* to be removed from the compartment.

Functional Statements

F4F1 Sanitary facilities

[2019: FF2.1]

A building is to be provided with—

(a) suitable sanitary facilities and space and facilities for personal hygiene; and

(b) adequate means for the prevention of contaminants to hot water, warm water and cooling water systems.

F4F2 Laundry facilities

[2019: FF2.2]

A building is to be provided with—

(a) space or facilities for laundering; and

(b) suitable means for the sanitary disposal of waste water.

Applications

F4F2 only applies to—

(a) a Class 2 building or a Class 4 part of a building; and

(b) a Class 9a *health-care building*; and

(c) a Class 9b *early childhood centre*; and

(d) a Class 9c building.

F4F3 Food preparation facilities

[2019: FF2.3]

A building is to be provided with—

(a) space and facilities for the preparation and cooking of food; and

(b) suitable means for the sanitary disposal of associated waste water.

Applications

F4F3 only applies to—

(a) a Class 2 building or a Class 4 part of a building; and

(b) a Class 9a *health-care building*; and

(c) a Class 9b *early childhood centre*; and

(d) a Class 9c building.

F4F4 Removal of unconscious occupant

[2019: FF2.4]

A *sanitary compartment* is to have sufficient space or other means to permit an unconscious occupant to be removed from the compartment.

Performance Requirements

F4P1 Personal hygiene facilities

[2019: FP2.1]

Suitable sanitary facilities for personal hygiene must be provided in a convenient location within or associated with a building, to the degree necessary, appropriate to—

(a) the function or use of the building; and

(b) the number and gender of the occupants; and

(c) the disability or other particular needs of the occupants.

VIC F4P2

F4P2 Laundry facilities

[2019: FP2.2]

Laundering facilities or space for laundering facilities and the means for the sanitary disposal of waste water must be provided in a convenient location within or associated with a building appropriate to the function or use of the building.

Applications

F4P2 only applies to—

(a) a Class 2 building or Class 4 part of a building; and

(b) a Class 9a *health-care building*; and

(c) a Class 9b *early childhood centre*; and

(d) a Class 9c building.

F4P3 Kitchen facilities

[2019: FP2.3]

A facility must be provided which includes—

(a) a means for food rinsing, utensil washing and the sanitary disposal of associated waste water; and

(b) a means for cooking food; and

(c) a space for food preparation.

Applications

F4P3 only applies to—

(a) a Class 2 building or Class 4 part of a building; and

(b) a Class 9a *health-care building*; and

(c) a Class 9b *early childhood centre*; and

(d) a Class 9c building.

F4P4 Disposal of contaminated water from containers

[2019: FP2.4]

Suitable means must be provided in a building containing wards or bedrooms to facilitate the emptying of sewage or dirty water from containers.

Applications

F4P4 only applies to a Class 9a or 9c building.

F4P5 Construction of sanitary compartments to allow removal of unconscious people

[2019: FP2.5]

A *sanitary compartment* must be constructed with sufficient space or other means to permit an unconscious occupant to be removed from the compartment.

NSW F4P6

F4P6 Microbial control for water systems

[2019: FP2.6]

Hot water, warm water and cooling water systems installed in a building must control the accumulation of harmful levels of micro-organisms.

Limitations

F4P6 does not apply to a system serving only a single *sole-occupancy unit* in a Class 2 or 3 building or Class 4 part of a building.

Verification Methods

F4V1 Sanitary facilities

[2019: FV2.1]

(1) Compliance with F4P1, for the number of sanitary facilities, is verified when queuing modelling predicts that occupant waiting time for sanitary facilities is at least equivalent to the waiting time predicted using the respective *Deemed-to-Satisfy Provisions*.

(2) For calculations performed under (1), the occupant waiting time is determined as the 90th percentile wait time at maximum population.

(3) Queuing modelling in (1) must reflect the following:

(a) Function or use of the building.

(b) Number and gender of occupants.

(c) The disability or other particular needs of the occupants.

(d) Occupant usage patterns.

Deemed-to-Satisfy Provisions

F4D1 Deemed-to-Satisfy Provisions

[2019: F2.0]

VIC F4D1(1)

(1) Where a *Deemed-to-Satisfy Solution* is proposed, *Performance Requirements* F4P1 to F4P6 are satisfied by complying with—

(a) F4D2 to F4D12; and

(b) for public transport buildings, Part I2; and

(c) for *farm sheds*, Part I3.

(2) Where a *Performance Solution* is proposed, the relevant *Performance Requirements* must be determined in accordance with A2G2(3) and A2G4(3) as applicable.

F4D2 Facilities in residential buildings

[2019: F2.1]

(1) For facilities in Class 2 buildings, the following applies:

(a) Within each *sole-occupancy unit*, provide—

(i) a kitchen sink and facilities for the preparation and cooking of food; and

(ii) a bath or shower; and

(iii) a closet pan; and

(iv) a washbasin.

(b) For laundry facilities, provide either—

(i) in each *sole-occupancy unit*—

(A) clothes washing facilities, comprising at least one washtub and a space for a washing machine; and

(B) clothes drying facilities comprising clothes line or a hoist with not less than 7.5 m of line, or space for one heat operated drying cabinet or appliance in the same room as the clothes washing facilities; or

(ii) a separate laundry for each 4 *sole-occupancy units*, or part thereof, that must comprise—

(A) clothes washing facilities, comprising at least one washtub and a space for a washing machine; and

(B) clothes drying facilities comprising clothes line or a hoist with not less than 7.5 m of line per *sole-occupancy unit*, or space for one heat operated drying cabinet or appliance.

(c) For the purposes of (a) and (b), a kitchen sink or washbasin must not be counted as a laundry washtub.

(2) For facilities in Class 3 buildings other than *residential care buildings*, the following applies:

(a) For residents in each building or group of buildings, for each 10 residents for whom private facilities are not provided, provide—

(i) a bath or shower; and

(ii) a closet pan; and

(iii) a washbasin.

(b) Notwithstanding (a), if one urinal is provided for each 25 males up to 50 and one additional urinal for each additional 50 males or part thereof, one closet pan for each 12 males may be provided.

(c) Facilities for employees must be provided in accordance with F4D4.

(d) Facilities *required* by (a), (b) or (c) need not be situated in the same building.

(3) For facilities in Class 3 *residential care buildings*, the following applies:

(a) For residents in each building or group of buildings, provide—

(i) a shower, closet pan and wash basin for each 8 residents or part thereof where private facilities are not provided; and

(ii) a suitable bath for each 30 residents or part thereof.

(b) For the purposes of (a), urinals must not be taken into consideration in calculating the number of facilities.

(4) For facilities in a Class 4 part of a building, the following applies:

(a) For the *sole-occupancy unit*, provide—

(i) a kitchen sink and facilities for the preparation and cooking of food; and

(ii) a bath or shower; and

(iii) a closet pan; and

(iv) a washbasin; and

(v) clothes washing facilities, comprising a washtub and space in the same room for a washing machine; and

(vi) a clothes line or hoist, or space for a heat-operated drying cabinet or similar appliance for the exclusive use of the occupants.

(b) For the purposes of (a), a kitchen sink or washbasin must not be counted as a laundry washtub.

(5) For facilities in Class 9c buildings, the following applies:

(a) For residents in each building or group of buildings, provide—

(i) a closet pan and wash basin for each 6 residents or part thereof where private facilities are not provided; and

(ii) a shower for each 7 residents or part thereof for where private facilities are not provided; and

(iii) a suitable bath, fixed or mobile.

(b) In addition to the facilities *required* by (a), provide—

(i) one kitchen or other adequate facility for the preparation and cooking or reheating of food including a kitchen sink and washbasin; and

(ii) laundry facilities for the cleansing and drying of linen and clothing or adequate facilities for holding and dispatch or treatment of soiled linen and clothing and the like and the receipt and storage of clean linen; and

(iii) one clinical hand washing basin for each 16 residents or part thereof.

(c) For the purposes of (a), urinals must not be taken into consideration in calculating the number of facilities.

F4D3 Calculation of number of occupants and facilities

[2019: F2.2]

(1) The number of persons accommodated must be calculated according to D2D18 if it cannot be more accurately determined by other means.

(2) Unless the premises are used predominantly by one sex, sanitary facilities must be provided on the basis of equal numbers of males and females.

(3) In calculating the number of sanitary facilities to be provided under F4D2 and F4D4, a unisex facility *required* for people with a disability (other than a facility provided under F4D12) may be counted once for each sex.

(4) For the purposes of this Part, a unisex facility comprises one closet pan, one washbasin and means for the disposal of sanitary products.

F4D4 Facilities in Class 3 to 9 buildings

[2019: F2.3]

(1) Except where permitted by (3), (4), (7), F4D5(a), F4D5(b) and F4D12(1), separate sanitary facilities for males and females must be provided for Class 3, 5, 6, 7, 8 or 9 buildings in accordance with Tables F4D4a, F4D4b, F4D4c, F4D4d, F4D4e, F4D4f, F4D4g, F4D4h, F4D4i, F4D4j, F4D4k and F4D4l, as appropriate.

(2) In Tables F4D4a, F4D4b, F4D4c, F4D4d, F4D4e, F4D4f, F4D4g, F4D4h, F4D4i, F4D4j, F4D4k and F4D4l—

(a) 'Number' means the number of facilities *required*; and

(b) '>' means greater than; and

(c) a hyphen means no data (refer to the row above for the highest value applicable); and

(d) 'N/A' means not applicable; and

(e) a reference to—

(i) 'employees' includes owners and managers using the building; and

(ii) 'add 1 per 100 or 150, 250, 500, etc.' includes any part thereof of that number.

(3) If not more than 10 people are employed, a unisex facility may be provided instead of separate facilities for each sex.

(4) If the majority of employees are of one sex, not more than 2 employees of the other sex may share toilet facilities if the facilities are separated by means of walls, partitions and doors to afford privacy.

(5) Employees and the public may share the same facilities in a Class 6 and 9b building (other than a *school* or *early childhood centre*) provided the number of facilities provided is not less than the total number of facilities *required* for employees plus those *required* for the public.

(6) Adequate means of disposal of sanitary products must be provided in sanitary facilities for use by females.

(7) Separate sanitary facilities for males and females need not be provided for patients in a *ward area* of a Class 9a building.

(8) A Class 9a *health-care building* must be provided with—

(a) one kitchen or other adequate facility for the preparation and cooking or reheating of food including a kitchen sink and washbasin; and

(b) laundry facilities for the cleansing and drying of linen and clothing or adequate facilities for holding and dispatch or treatment of soiled linen and clothing, sanitary products and the like and the receipt and storage of clean linen; and

(c) one shower for each 8 patients or part thereof; and

(d) one island-type plunge bath in each *storey* containing a *ward area*.

VIC F4D4(9)

(9) A Class 9b *early childhood centre* must be provided with—

(a) a kitchen or food preparation area with a kitchen sink, separate hand washing facilities, space for a refrigerator and space for cooking facilities, with—

(i) the facilities protected by a door or gate with child proof latches to prevent unsupervised access to the facilities by children younger than 5 years old; and

(ii) the ability to facilitate supervision of children from the facilities if the *early childhood centre* accommodates children younger than 2 years old; and

(b) one bath, shower or shower-bath; and

(c) if the centre accommodates children younger than 3 years old—

(i) a laundry facility comprising a washtub and space in the same room for a washing machine; and

(ii) a bench type baby bath, which is within 1 m of the nappy change bench; and

(iii) a nappy changing bench which—

(A) is within 1 m of separate adult hand washing facilities and bench type baby bath; and

(B) must be not less than 0.9 m^2 in area and at a height of not less than 850 mm, but not more than 900 mm above the finished floor level; and

(C) must have a space not less than 800 mm high, 500 mm wide and 800 mm deep for the storage of steps; and

(D) is positioned to permit a staff member changing a nappy to have visibility of the play area at all times.

(10) Class 9b theatres and sporting venues must be provided with one shower for each 10 participants or part thereof.

(11) Not less than one washbasin must be provided where closet pans or urinals are provided.

VIC F4D4(12)

Table F4D4a: Sanitary facilities in Class 3, 5, 6 and 9 buildings other than schools

User group	Facility type	Design occupancy	Number
Male employees	Closet pans	1 - 20	1
		>20	Add 1 per 20
	Urinals	1 - 10	0
		11 - 25	1
		26 - 50	2
		>50	Add 1 per 50
	Washbasins	1 - 30	1
		>30	Add 1 per 30
Female employees	Closet pans	1 - 15	1
		>15	Add 1 per 15
	Washbasins	1 - 30	1
		>30	Add 1 per 30

Table F4D4b: Sanitary facilities in Class 7 and 8 buildings

User group	Facility type	Design occupancy	Number
Male employees	Closet pans	1 - 20	1
		>20	Add 1 per 20
	Urinals	1 - 10	0
		11 - 25	1
		26 - 50	2
		>50	Add 1 per 50
	Washbasins	1 - 20	1
		>20	Add 1 per 20
Female employees	Closet pans	1 - 15	1
		>15	Add 1 per 15
	Washbasins	1 - 20	1
		>20	Add 1 per 20

Table Notes

Sanitary facilities need not be provided for a Class 8 *electricity network substation*.

Table F4D4c: Sanitary facilities in Class 6 buildings – department stores, shopping centres

User group	Facility type	Design occupancy	Number
Male patrons	Closet pans	1 - 1200	1
		>1200	Add 1 per 1200
	Urinals	1 - 600	1
		>600	Add 1 per 1200
	Washbasins	1 - 600	1
		>600	Add 1 per 1200
Female patrons	Closet pans	1 - 300	1
		301 - 600	2
		>600	Add 1 per 1200
	Washbasins	1-600	1
		601 - 1200	2
		>1200	Add 1 per 1200

Table Notes

Sanitary facilities need not be provided for patrons if the total number of persons accommodated in the building is not more than 600.

NSW Table F4D4d

Table F4D4d: Sanitary facilities in Class 6 buildings – restaurants, cafes, bars

User group	Facility type	Design occupancy	Number
Male patrons	Closet pans	1 - 100	1
		101 - 300	2
		>300	Add 1 per 200
	Urinals	1 - 50	1
		51 - 100	2
		101 - 150	3
		151 - 200	4
		201 - 250	5
		>250	Add 1 per 100
	Washbasins	1 - 50	1
		51 - 200	2
		>200	Add 1 per 200
Female patrons	Closet pans	1 - 25	1
		26 - 50	2
		51 - 100	3
		101 - 150	4
		151 - 200	5
		201 - 250	6
		>250	Add 1 per 100
	Washbasins	1 - 50	1
		51 - 150	2
		>150	Add 1 per 200

Table Notes

Sanitary facilities need not be provided for patrons if the total number of persons accommodated in the building is not more than 20.

Table F4D4e: Sanitary facilities in Class 9a health-care buildings

User group	Facility type	Design occupancy	Number
Male patients	Closet pans	1 - 16	2
		>16	Add 1 per 8
	Washbasins	1 - 8	1
		>8	Add 1 per 8
Female patients	Closet pans	1 - 16	2
		>16	Add 1 per 8
	Washbasins	1 - 8	1
		>8	Add 1 per 8

Table Notes

Urinals are not required for a Class 9a *health-care building*.

Table F4D4f: Sanitary facilities in Class 9b buildings – schools

User group	Facility type	Design occupancy	Number
Male employees	Closet pans	1 - 20	1
		>20	Add 1 per 20
	Urinals	1 - 10	0
		11 - 20	1
		21 - 45	2
		>45	Add 1 per 30
	Washbasins	1 -30	1
		>30	Add 1 per 30
Female employees	Closet pans	1 - 5	1
		>5	Add 1 per 15
	Washbasins	1 - 30	1
		>30	Add 1 per 30
Male students	Closet pans	1 - 25	1
		26 - 75	2
		76 - 150	3
		151 - 200	4
		>200	Add 1 per 100
	Urinals	1 - 50	1
		51 - 100	2
		>100	Add 1 per 100
	Washbasins	1 - 10	1
		11 - 50	2
		51 - 100	3
		>100	Add 1 per 75
Female students	Closet pans	1 - 10	1

User group	Facility type	Design occupancy	Number
		11 - 25	2
		26 - 100	Add 1 per 25
		>100	Add 1 per 50
	Washbasins	1 - 10	1
		11 - 50	2
		51 - 100	3
		>100	Add 1 per 75

VIC Table F4D4g

Table F4D4g: Sanitary facilities in Class 9b buildings – early childhood centres

User group	Facility type	Design occupancy	Number
Children	Closet pans	1 - 30	2
		>30	Add 1 per 15
	Washbasins	1 - 30	2
		>30	Add 1 per 15

Table Notes

(1) Urinals are not *required* for a Class 9b *early childhood centre*.

(2) Facilities for use by children must be—

(a) junior pans; and

(b) washbasins with a rim height not exceeding 600 mm; and

(c) accessible from both indoor and outdoor play areas.

Table F4D4h: Sanitary facilities in Class 9b buildings – theatres and cinemas with multiple auditoria, art galleries and the like

User group	Facility type	Design occupancy	Number
Male participants	Closet pans	1 - 20	1
		>20	Add 1 per 20
	Urinals	1 - 10	1
		>10	Add 1 per 10
	Washbasins	1 - 10	1
		>10	Add 1 per 10
Female participants	Closet pans	1 - 10	1
		>10	Add 1 per 10
	Washbasins	1 - 10	1
		>10	Add 1 per 10
Male spectators or patrons	Closet pans	1 - 250	1
		251 - 500	2
		>500	Add 1 per 500
	Urinals	1 - 100	1
		>100	Add 1 per 100
	Washbasins	1 - 150	1
		>150	Add 1 per 150

User group	Facility type	Design occupancy	Number
Female spectators or patrons	Closet pans	1 - 10	1
		11 - 50	2
		>50	Add 1 per 60
	Washbasins	1 - 80	1
		81 - 250	2
		251 - 430	3
		>430	Add 1 per 200

Table F4D4i: Sanitary facilities in Class 9b buildings – single auditorium theatres and cinemas

User group	Facility type	Design occupancy	Number
Male patrons	Closet pans	1 - 50	0
		51 - 250	1
		251 - 500	2
		>500	Add 1 per 500
	Urinals	1 - 50	0
		51 - 100	1
		>100	Add 1 per 100
	Washbasins	1 - 50	0
		51 - 150	1
		>150	Add 1 per 150
Female patrons	Closet pans	1 - 50	0
		51 - 110	3
		111 - 170	4
		171 - 230	5
		231 - 250	6
		>250	Add 1 per 80
	Washbasins	1 - 50	0
		51 - 150	1
		>150	Add 1 per 150

Table F4D4j: Sanitary facilities in Class 9b buildings – sports venues or the like

User group	Facility type	Design occupancy	Number
Male participants	Closet pans	1 - 20	1
		>20	Add 1 per 20
	Urinals	1 - 10	1
		>10	Add 1 per 10
	Washbasins	1 - 10	1
		>10	Add 1 per 10
Female participants	Closet pans	1 - 10	1
		>10	Add 1 per 10
	Washbasins	1 - 10	1
		>10	Add 1 per 10

User group	Facility type	Design occupancy	Number
Male spectators or patrons	Closet pans	1 - 250	1
		251 - 500	2
		>500	Add 1 per 500
	Urinals	1 - 100	1
		>100	Add 1 per 100
	Washbasins	1 - 150	1
		>150	Add 1 per 150
Female spectators or patrons	Closet pans	1 - 15	1
		16 - 60	2
		61 - 120	3
		>120	Add 1 per 70
	Washbasins	1 - 60	1
		61 - 200	2
		201 - 350	3
		>350	Add 1 per 150

Table F4D4k: Sanitary facilities in Class 9b buildings – churches, chapels or the like

User group	Facility type	Design occupancy	Number
Male patrons	Closet pans	1 - 300	1
		>300	Add 1 per 500
	Urinals	1 - 200	1
		>200	Add 1 per 200
	Washbasins	1 - 250	1
		>250	Add 1 per 250
Female patrons	Closet pans	1 - 150	1
		>150	Add 1 per 150
	Washbasins	1 - 250	1
		>250	Add 1 per 250

Table F4D4l: Sanitary facilities in Class 9b buildings – public halls, function rooms or the like

User group	Facility type	Design occupancy	Number
Male patrons	Closet pans	1 - 100	1
		>100	Add 1 per 200
	Urinals	1 - 50	1
		51 - 100	2
		101 - 150	3
		151 - 200	4
		201 - 250	5
		>250	Add 1 per 100
	Washbasins	1 - 50	1
		51 - 200	2
		>200	Add 1 per 200

User group	Facility type	Design occupancy	Number
Female patrons	Closet pans	1 - 25	1
		26 - 50	2
		51 - 100	3
		101 - 150	4
		151 - 200	5
		201 - 250	6
		>250	Add 1 per 100
	Washbasins	1 - 50	1
		51 - 150	2
		>150	Add 1 per 200

Table Notes

Sanitary facilities need not be provided for patrons if the total number of persons accommodated in the building is not more than 20.

F4D5 Accessible sanitary facilities

[2019: F2.4]

In a building *required* to be *accessible*—

(a) *accessible* unisex *sanitary compartments* must be provided in *accessible* parts of the building in accordance with F4D6; and

(b) *accessible* unisex showers must be provided in accordance with F4D7; and

(c) at each bank of toilets where there is one or more toilets in addition to an *accessible* unisex *sanitary compartment* at that bank of toilets, not less than one *sanitary compartment* suitable for a person with an ambulant disability for use by males and not less than one *sanitary compartment* suitable for a person with an ambulant disability for use by females, each in accordance with AS 1428.1, must be provided; and

(d) an *accessible* unisex *sanitary compartment* must contain a closet pan, washbasin, shelf or bench top and adequate means of disposal of sanitary products; and

(e) the circulation spaces, fixtures and fittings of all *accessible* sanitary facilities provided in accordance with F4D6 and F4D7 must comply with the requirements of AS 1428.1; and

(f) an *accessible* unisex sanitary facility must be located so that it can be entered without crossing an area reserved for one sex only; and

(g) where two or more of each type of *accessible* unisex sanitary facility are provided, the number of left and right handed mirror image facilities must be provided as evenly as possible; and

(h) where male sanitary facilities are provided at a separate location to female sanitary facilities, *accessible* unisex sanitary facilities are only *required* at one of those locations; and

(i) an *accessible* unisex *sanitary compartment* or an *accessible* unisex shower need not be provided on a *storey* or level that is not *required* by D4D4(f) to be provided with a passenger lift or ramp complying with AS 1428.1.

F4D6 Accessible unisex sanitary compartments

[2019: Table F2.4a]

SA F4D6(1)

(1) Where *required* by F4D5(a), the minimum number of *accessible* unisex *sanitary compartments* for each class of building is as follows:

(a) For a Class 1b building—

(i) not less than 1; and

(ii) where private *accessible* unisex *sanitary compartments* are provided for every *accessible* bedroom,

common *accessible* unisex *sanitary compartments* need not be provided.

(b) For a Class 2 building, where *sanitary compartments* are provided in common areas, not less than 1.

(c) For Class 3 and Class 9c buildings—

(i) in every *accessible sole-occupancy unit* provided with *sanitary compartments* within the *accessible sole-occupancy unit*, not less than 1; and

(ii) at each bank of *sanitary compartments* containing male and female *sanitary compartments* provided in common areas, not less than 1.

(d) For Class 5, 6, 7, 8 or 9 buildings, where F4D4 requires closet pans—

(i) 1 on every *storey* containing *sanitary compartments*; and

(ii) where a *storey* has more than 1 bank of *sanitary compartments* containing male and female *sanitary compartments*, at not less than 50% of those banks.

(e) For a Class 10a building, at each bank of *sanitary compartments* containing male and female *sanitary compartments*, not less than 1.

(2) The requirements of (1)(d) do not apply within a *ward area* of a Class 9a *health-care building*.

(3) The requirements of (1)(e) do not apply to—

(a) a Class 10a appurtenant to another class of building; or

(b) a *sanitary compartment* dedicated to a single caravan/camping site.

F4D7 Accessible unisex showers

[2019: Table F2.4b]

SA F4D7(1)

(1) Where *required* by F4D5(b), the minimum number of *accessible* unisex showers for each class of building is as follows:

(a) For a Class 1b building—

(i) not less than 1; and

(ii) where private *accessible* unisex showers are provided for every *accessible* bedroom, common *accessible* unisex showers need not be provided.

(b) For a Class 2 building, where showers are provided in common areas, not less than 1.

(c) For Class 3 and 9c buildings—

(i) in every *accessible sole-occupancy unit* provided with showers within the *accessible sole-occupancy unit*, not less than 1; and

(ii) 1 for every 10 showers or part thereof provided in common areas.

(d) For Class 5, 6, 7, 8 or 9 buildings, where F4D4 requires 1 or more showers, not less than 1 for every 10 showers or part thereof.

(e) For a Class 10a building, where showers are provided, 1 for every 10 showers or part thereof.

(2) The requirements of (1)(d) do not apply within a *ward area* of a Class 9a *health-care building*.

(3) The requirements of (1)(e) do not apply to—

(a) a Class 10a appurtenant to another class of building; and

(b) a *sanitary compartment* dedicated to a single caravan/camping site.

F4D8 Construction of sanitary compartments

[2019: F2.5]

(1) Other than in an *early childhood centre*, *sanitary compartments* must have doors and partitions that separate adjacent compartments and extend—

(a) from floor level to the ceiling in the case of a unisex facility; or

(b) to a height of not less than 1.5 m above the floor if primary *school* children are the principal users; or

(c) 1.8 m above the floor in all other cases.

(2) Unless there is a clear space of at least 1.2 m, measured in accordance with Figure F4D8, between the closet pan within the *sanitary compartment* and the doorway, the door to a fully enclosed *sanitary compartment* must—

(a) open outwards; or

(b) slide; or

(c) be readily removable from the outside of the *sanitary compartment*.

VIC F4D8(3)

(3) In an *early childhood centre*, facilities for use by children must have each *sanitary compartment* screened by a partition which, except for the doorway, is opaque for a height of at least 900 mm but not more than 1200 mm above the floor level.

Figure F4D8: Construction of sanitary compartments

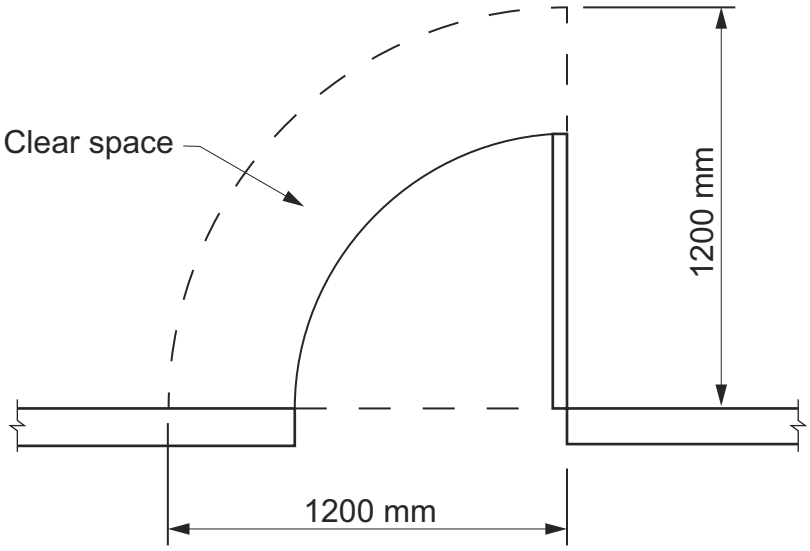

F4D9 Interpretation: urinals and washbasins

[2019: F2.6]

(1) A urinal may be—

(a) an individual stall or wall-hung urinal; or

(b) each 600 mm length of a continuous urinal trough; or

(c) a closet pan used in place of a urinal.

(2) A washbasin may be—

(a) an individual basin; or

(b) a part of a hand washing trough served by a single water tap.

NSW F4D10

F4D10 Microbial (legionella) control

[2019: F2.7]

Hot water, warm water and cooling water systems in a building other than a system serving only a single *sole-occupancy unit* in a Class 2 or 3 building or Class 4 part of a building must be installed in accordance with AS/NZS 3666.1.

F4D11 Waste management

[2019: F2.8]

(1) In a Class 9a *health-care building*, at least one slop-hopper or other device, other than a water closet pan or urinal, must be provided—

(a) on any *storey* containing *ward areas* or bedrooms to facilitate emptying of containers of sewage or dirty water; and

(b) with a flushing apparatus, tap and grating.

(2) In a Class 9c building, the following facilities must be provided for every 60 beds or part thereof on each storey containing *resident use areas*:

(a) One slop-hopper or other device other than a water closet pan or urinal for the safe handling and disposal of liquid and solid wastes with a flushing apparatus, tap and grating.

(b) An appliance for the disinfection of pans or an adequate means to dispose of receptacles.

F4D12 Accessible adult change facilities

[2019: F2.9]

(1) One unisex *accessible* adult change facility must be provided in an *accessible* part of a—

(a) Class 6 building that is a shopping centre having a design occupancy of not less than 3,500 people, calculated on the basis of the *floor area* and containing a minimum of 2 *sole-occupancy units*; and

(b) Class 9b sports venue or the like that—

(i) has a design occupancy of not less than 35,000 spectators; or

(ii) contains a *swimming pool* that has a perimeter of not less than 70 m and that is *required* by D4D2 to be *accessible*; and

(c) museum, art gallery or the like having a design occupancy of not less than 1,500 patrons; and

(d) theatre or the like having a design occupancy of not less than 1,500 patrons; and

(e) passenger use area of an airport terminal building within an airport that accepts domestic and/or international flights that are public transport services as defined in the Disability Standards for Accessible Public Transport 2002.

(2) *Accessible* adult change facilities *required* by (1)—

(a) must be constructed in accordance with Specification 27; and

(b) cannot be combined with another *sanitary compartment*.

(3) For the purposes of (1), design occupancy must be calculated in accordance with D2D18, but excluding any area that—

(a) can only be accessed by staff, employees, contractors, maintenance personnel and the like; or

(b) is subject to an exemption under D4D5.

TAS F4D13

TAS F4D14

VIC F4D13

Explanatory Information: Cross-volume considerations

NCC Volume Three contains a number of plumbing and drainage provisions which are relevant to facilities. These include, but are not limited to, those listed in Table F4.

Table F4: Cross-volume considerations

Item	NCC Volume Three - Plumbing Code of Australia
Access for maintenance of plumbing and drainage	B1 Cold water services
	B2 Heated water services
	B3 Non-drinking water services
	C1 Sanitary plumbing systems
	C2 Sanitary drainage systems
	C3 On-site wastewater management
Heated water temperature control for facilities used for personal hygiene	B2 Heated water services

Part F5 Room heights

Introduction to this Part

This Part is intended to prevent the construction of rooms or other spaces with insufficient ceiling heights, which can cause injury or loss of amenity for building occupants.

Objectives

F5O1 Objective

[2019: FO3]

The Objective of this Part is to safeguard occupants from injury or loss of *amenity* caused by inadequate height of a room or space.

Functional Statements

F5F1 Room or space heights

[2019: FF3.1]

A building is to be constructed to provide height in a room or space suitable for the intended use.

Performance Requirements

VIC F5P1

F5P1 Room or space heights

[2019: FP3.1]

A *habitable room* or space must have sufficient height that does not unduly interfere with its intended function.

Verification Methods

F5V1 Room or space heights

[2019: FV3.1]

VIC F5V1(1)

(1) Compliance with F5P1 is verified where the height of a *habitable room* or space provides an appropriate *activity support level* that does not unduly interfere with its intended function.

(2) For the purposes of (1), the *activity support level* must consider the dimensions of—

(a) doors, *required exits*, ramps, barriers, stairs and *windows*; and

(b) fixed fittings and services; and

(c) fixed and moveable equipment or furniture; and

(d) occupant circulation spaces.

Deemed-to-Satisfy Provisions

VIC F5D1

F5D1 Deemed-to-Satisfy Provisions

[2019: F3.0]

(1) Where a *Deemed-to-Satisfy Solution* is proposed, *Performance Requirement* F5P1 is satisfied by complying with—

(a) F5D2; and

(b) for *farm sheds*, Part I3.

(2) Where a *Performance Solution* is proposed, the relevant *Performance Requirements* must be determined in accordance with A2G2(3) and A2G4(3) as applicable.

F5D2 Height of rooms and other spaces

[2019: F3.1]

(1) The height of rooms and other spaces in a Class 2 or 3 building or Class 4 part of a building must be not less than—

(a) for a kitchen, laundry, or the like — 2.1 m; and

(b) for a corridor, passageway or the like — 2.1 m; and

(c) for a *habitable room* excluding a kitchen — 2.4 m; and

(d) in a *habitable room*, or space within a *habitable room*, with a sloping ceiling or projections below the ceiling line—

(i) in an attic — a height of not less than 2.2 m for not less than two-thirds of the *floor area* of the room or space; and

(ii) in other rooms — a height of not less than 2.4 m for not less than two-thirds of the *floor area* of the room or space; and

(e) in a non-habitable room, or space within a non-habitable room, with a sloping ceiling or projections below the ceiling line — a height of not less than 2.1 m for not less than two-thirds of the *floor area* of the room or space.

(2) For the purposes of (1), when calculating the *floor area* of a room or space, any part that has a ceiling height of less than 1.5 m is not included.

(3) The height of rooms and other spaces in a Class 5, 6, 7 or 8 building must be not less than—

(a) except as allowed in (b) and (8) — 2.4 m; and

(b) for a corridor, passageway, or the like — 2.1 m.

(4) The height of rooms and other spaces in a Class 9a *health-care building* must be not less than—

(a) for a *patient care area* — 2.4 m; and

(b) for an operating theatre or delivery room — 3 m; and

(c) for a treatment room, clinic, waiting room, passageway, corridor, or the like — 2.4 m.

(5) The height of rooms and other spaces in a Class 9b building must be not be less than—

(a) for a *school* classroom or other *assembly building* or part that accommodates not more than 100 persons — 2.4 m; and

(b) for a theatre, public hall or other *assembly building* or part that accommodates more than 100 persons — 2.7 m; and

(c) for a corridor—

(i) that serves an *assembly building* or part that accommodates not more than 100 persons — 2.4 m; or

(ii) that serves an *assembly building* or part that accommodates more than 100 persons — 2.7 m.

(6) For the purposes of (5) the number of persons accommodated must be calculated according to D2D18.

(7) The height of rooms and other spaces in a Class 9c building must be not be less than—

(a) for a kitchen, laundry, or the like — 2.1 m; and

(b) for a corridor, passageway or the like — 2.4 m; and

(c) for a *habitable room* excluding a kitchen — 2.4 m.

(8) The height of rooms and other spaces in any building must be not be less than—

(a) for a bathroom, shower room, *sanitary compartment*, other than an *accessible* adult change facility, airlock, tea preparation room, pantry, store room, garage, car parking area, or the like — 2.1 m; and

(b) for a commercial kitchen — 2.4 m; and

(c) above a stairway, ramp, landing or the like — 2 m measured vertically above the nosing line of stairway treads or the floor surface of the ramp, landing or the like; and

(d) for a *required accessible* adult change facility — 2.4 m.

VIC F5D3

Part F6 Light and ventilation

Introduction to this Part

This Part is intended to ensure that building occupants have access to natural and artificial lighting, and fresh air, to prevent illness, injury or loss of *amenity*. This part also includes provisions for the location of *sanitary compartments* to reduce health risks and the spread of odours, airlocks and *carpark* and kitchen local exhaust ventilation.

Objectives

F6O1 Objective

[2019: FO4]

The Objective of this Part is to—

(a) safeguard occupants from injury, illness or loss of *amenity* due to—

(i) isolation from natural light; and

(ii) lack of adequate artificial lighting; and

(b) safeguard occupants from illness or loss of *amenity* due to lack of air freshness.

Functional Statements

F6F1 Natural light

[2019: FF4.1]

A space within a building used by occupants is to be provided with openings to admit natural light consistent with its function or use.

F6F2 Artificial light

[2019: FF4.2]

A space within a building used by occupants is to be provided with artificial lighting consistent with its function or use which, when activated in the absence of suitable natural light, will enable safe movement.

F6F3 Ventilation

[2019: FF4.3]

A space used by occupants within a building is to be provided with adequate ventilation consistent with its function or use.

Performance Requirements

F6P1 Natural lighting

[2019: FP4.1]

Sufficient openings must be provided and distributed in a building, appropriate to the function or use of that part of the building so that natural light, when available, provides an *average daylight factor* of not less than 2%.

Applications

F6P1 only applies to a Class 2, 3 or 9 building, or a Class 4 part of a building.

F6P2 Artificial lighting

[2019: FP4.2]

Artificial lighting must be installed to provide an *illuminance* of not less than 20 lux appropriate to the function or use of the building to enable safe movement by occupants.

F6P3 Outdoor air supply

[2019: FP4.3]

A space in a building used by occupants must be provided with means of ventilation with *outdoor air* which will maintain adequate air quality.

F6P4 Mechanical ventilation to control odours and contaminants

[2019: FP4.4]

A mechanical air-handling system installed in a building must control—

(a) the circulation of objectionable odours; and

(b) the accumulation of harmful contamination by micro-organisms, pathogens and toxins.

F6P5 Disposal of contaminated air

[2019: FP4.5]

Contaminated air must be disposed of in a manner which does not unduly create a nuisance or hazard to people in the building or *other property*.

Verification Methods

F6V1 Verification of suitable indoor air quality

[2019: FV4.1]

For a Class 2, 3, 5, 6, 9b or 9c building or Class 4 part of a building, compliance with F6P3 and F6P4(a) is verified when it is determined that the building under typical conditions in use is provided with sufficient ventilation with *outdoor air* such that contaminant levels do not exceed the limits specified in Table F6V1.

Table F6V1: Maximum contaminant limits for acceptable indoor air quality

Pollutant	Averaging time	Maximum air quality value
Carbon dioxide, CO_2	8 hours	850 ppm Note 1
Carbon monoxide, CO	15 minutes	90 ppm
Carbon monoxide, CO	30 minutes	50 ppm
Carbon monoxide, CO	1 hour	25 ppm
Carbon monoxide, CO	8 hours	10 ppm
Formaldehyde, CH_2O	30 minutes	0.1 mg/m^3
Nitrogen dioxide, NO_2	1 year	40 µg/m^3 (0.0197 ppm) Note 2

Pollutant	Averaging time	Maximum air quality value
Nitrogen dioxide, NO_2	1 hour	200 µg/m^3 (0.0987 ppm)
Ozone, O_3	8 hour, daily maximum	100 µg/m^3 (0.0473 ppm)
Particulate matter, $PM_{2.5}$	1 year	10 µg/m^3
Particulate matter, $PM_{2.5}$	24 hour (99th percentile)	25 µg/m^3
Particulate matter, PM_{10}	1 year	20 µg/m^3
Particulate matter, PM_{10}	24 hour (99th percentile)	50 µg/m^3
Total volatile organic compounds	1 hour	500 µg/m^3

Table Notes

(1) Based on body odour metric (i.e. 450 ppm above ambient CO_2 level of 400 ppm and demand control ventilation provisions in AS 1668.2).

(2) Based on pressure of 101.325 kPa and temperature of 25°C (i.e. the conversion is mg/m^3 = ppm (molecular weight/24.4)).

F6V2 Verification of suitable indoor air quality for carparks

[2019: FV4.2]

For a Class 7a building, compliance with F6P3 and F6P4(a) is verified when it is determined that the building is provided with sufficient ventilation with *outdoor air* such that carbon monoxide exposure levels do not exceed the limits specified in Table F6V2.

Table F6V2: Maximum carbon monoxide exposure for carparks

Concentration (ppm)	Total exposure duration per day
100	Not to be exceeded
90	15 minutes
60	1 hour
30	8 hours

Table Notes

Various government work health and safety regulations specify workplace exposure limits for airborne contaminants in the workplace.

F6V3 Verification of suitable provision of natural light

[2019: FV4.3]

Compliance with F6P1 is verified for the provision of natural light when the *average daylight factor* for each *window* is determined in accordance with the formula: $\text{Average Daylight Factor} = \frac{W}{A}\frac{T\theta}{(1-R^2)}$, where—

(a) W = the net area of the light transmitting *window* (m^2); and

(b) A = the total area of the *internal wall*, floor and ceiling surfaces (m^2); and

(c) T = the diffuse light transmittance of the *window*; and

(d) θ = visible sky angle in degrees, measured in a vertical plane normal to and from the centre of the *window*; and

(e) R = the area-weighted average reflectance of area A.

Applications

F6V3 only applies to—

(a) *habitable rooms* of Class 2 buildings and Class 4 parts of buildings; and

(b) bedrooms and dormitories of Class 3 buildings; and

(c) rooms used for sleeping purposes in Class 9a and 9c buildings; and

(d) general purpose classrooms in primary and secondary *school* and playrooms or the like for the use of children in an *early childhood centre* in Class 9b buildings.

Deemed-to-Satisfy Provisions

F6D1 Deemed-to-Satisfy Provisions

[2019: F4.0]

(1) Where a *Deemed-to-Satisfy Solution* is proposed, *Performance Requirements* F6P1 to F6P5 are satisfied by complying with—

(a) F6D2 to F6D12; and

(b) for a building containing an *occupiable outdoor area*, Part G6; and

(c) for *farm buildings* and *farm sheds*, Part I3.

(2) Where a *Performance Solution* is proposed, the relevant *Performance Requirements* must be determined in accordance with A2G2(3) and A2G4(3) as applicable.

F6D2 Provision of natural light

[2019: F4.1]

Natural light must be provided in:

(a) A Class 2 building and a Class 4 part of a building — to all *habitable rooms*.

(b) A Class 3 building — to all bedrooms and dormitories.

(c) Class 9a and 9c buildings — to all rooms used for sleeping purposes.

(d) A Class 9b building — to all general purpose classrooms in primary or secondary *schools* and all playrooms or the like for the use of children in an *early childhood centre*.

F6D3 Methods and extent of natural light

[2019: F4.2]

(1) *Required* natural light must be provided by—

(a) *windows*, excluding *roof lights*, that—

(i) have an aggregate light transmitting area measured exclusive of framing members, glazing bars or other obstructions of not less than 10% of the *floor area* of the room; and

(ii) are open to the sky or face a court or other space open to the sky or an open verandah, carport or the like; or

(b) *roof lights*, that—

(i) have an aggregate light transmitting area measured exclusive of framing members, glazing bars or other obstructions of not less than 3% of the *floor area* of the room; and

(ii) are open to the sky; or

(c) a proportional combination of *windows* and *roof lights required* by (a) and (b).

(2) Except in a Class 9c *aged care building*, in a Class 2, 3 or 9 building or Class 4 part of a building, a *required window* that faces a boundary of an adjoining allotment or a wall of the same building or another building on the allotment

must not be less than a horizontal distance from that boundary or wall that is the greater of—

(a) generally — 1 m; and

(b) in a *patient care area* or other room used for sleeping purposes in a Class 9a building — 3 m; and

(c) 50% of the square root of the exterior height of the wall in which the *window* is located, measured in metres from its sill.

(3) In a Class 9c *aged care building*, a *required window* must be transparent and located—

(a) in an *external wall* with the *window* sill not more than 1 m above the floor level; and

(b) where the *window* faces an adjoining allotment, another building or another wall of the same building, it must not be less than a horizontal distance of 3 m from the adjoining allotment, other building or wall.

(4) In a Class 9b *early childhood centre*, the sills of 50% of *windows* in children's rooms must be located not more than 500 mm above the floor level.

F6D4 Natural light borrowed from adjoining room

[2019: F4.3]

(1) Natural light to a room in a Class 2 building or Class 4 part of a building or in a *sole-occupancy unit* of a Class 3 building, may come through one or more glazed panels or openings from an adjoining room (including an enclosed verandah) if—

(a) both rooms are within the same *sole-occupancy unit* or the enclosed verandah is on common property; and

(b) the glazed panels or openings have an aggregate light transmitting area of not less than 10% of the *floor area* of the room to which it provides light; and

(c) the adjoining room has—

(i) *windows*, excluding *roof lights*, that—

(A) have an aggregate light transmitting area of not less than 10% of the combined *floor areas* of both rooms; and

(B) are open to the sky or face a court or other space open to the sky or an open verandah, carport or the like; or

(ii) *roof lights*, that—

(A) have an aggregate light transmitting area of not less than 3% of the combined *floor areas* of both rooms; and

(B) are open to the sky; or

(iii) a proportional combination of *windows* and *roof lights required* by (i) and (ii).

(2) The areas specified in (1)(b) and (c) may be reduced as appropriate if direct natural light is provided from another source.

F6D5 Artificial lighting

[2019: F4.4]

(1) Artificial lighting must be provided—

(a) in *required* stairways, passageways, and ramps; and

(b) if natural light of a standard equivalent to that *required* by F6D3 is not available, and the periods of occupation or use of the room or space will create undue hazard to occupants seeking egress in an emergency, in—

(i) a Class 4 part of a building — to *sanitary compartments*, bathrooms, shower rooms, airlocks and laundries; and

(ii) a Class 2 building — to *sanitary compartments*, bathrooms, shower rooms, airlocks, laundries, common stairways and other spaces used in common by the occupants of the building; and

(iii) Class 3, 5, 6, 7, 8 and 9 buildings — to all rooms that are frequently occupied, all spaces *required* to be *accessible*, all corridors, lobbies, internal stairways, other circulation spaces and paths of egress.

(2) The artificial lighting system must comply with AS/NZS 1680.0.

(3) The system may provide a lesser level of illumination to the following spaces during times when the level of lighting would be inappropriate for the use:

(a) A theatre, cinema or the like, when performances are in progress, with the exception of aisle lighting *required* by Part I1.

(b) A museum, gallery or the like, where sensitive displays require low lighting levels.

(c) A discotheque, nightclub or the like, where to create an ambience and character for the space, low lighting levels are used.

NSW F6D6

SA F6D6

F6D6 Ventilation of rooms

[2019: F4.5]

A *habitable room*, office, shop, factory, workroom, *sanitary compartment*, bathroom, shower room, laundry and any other room occupied by a person for any purpose must have—

(a) natural ventilation complying with F6D7; or

(b) a mechanical ventilation or air-conditioning system complying with AS 1668.2 and AS/NZS 3666.1.

F6D7 Natural ventilation

[2019: F4.6]

(1) Natural ventilation provided in accordance with F6D6(a) must consist of openings, *windows*, doors or other devices which can be opened—

(a) with a ventilating area not less than 5% of the *floor area* of the room *required* to be ventilated; and

(b) open to—

(i) a suitably sized court, or space open to the sky; or

(ii) an open verandah, carport, or the like; or

(iii) an adjoining room in accordance with F6D8.

(2) The requirements of (1)(a) do not apply to a Class 8 *electricity network substation*.

F6D8 Ventilation borrowed from adjoining room

[2019: F4.7]

Natural ventilation to a room may come through a *window*, opening, door or other device from an adjoining room (including an enclosed verandah) if both rooms are within the same *sole-occupancy unit* or the enclosed verandah is common property, and—

(a) in a Class 2 building, a *sole-occupancy unit* of a Class 3 building or Class 4 part of a building—

(i) the room to be ventilated is not a *sanitary compartment*; and

(ii) the *window*, opening, door or other device has a ventilating area of not less than 5% of the *floor area* of the room to be ventilated; and

(iii) the adjoining room has a *window*, opening, door or other device with a ventilating area of not less than 5% of the combined *floor areas* of both rooms; and

(b) in a Class 5, 6, 7, 8 (except a Class 8 *electricity network substation*) or 9 building—

(i) the *window*, opening, door or other device has a ventilating area of not less than 10% of the *floor area* of the room to be ventilated, measured not more than 3.6 m above the floor; and

(ii) the adjoining room has a *window*, opening, door or other device with a ventilating area of not less than 10% of the combined *floor areas* of both rooms; and

(c) the ventilating areas specified in (a) and (b) may be reduced as appropriate if direct natural ventilation is provided from another source.

F6D9 Restriction on location of sanitary compartments

[2019: F4.8]

A *sanitary compartment* must not open directly into—

(a) a kitchen or pantry; or

(b) a public dining room or restaurant; or

(c) a dormitory in a Class 3 building; or

(d) a room used for public assembly (which is not an *early childhood centre*, primary *school* or *open spectator stand*); or

(e) a workplace normally occupied by more than one person.

F6D10 Airlocks

[2019: F4.9]

If a *sanitary compartment* is prohibited under F6D9 from opening directly to another room—

(a) in a *sole-occupancy unit* in a Class 2 or 3 building or Class 4 part of a building—

(i) access must be by an airlock, hallway or other room; or

(ii) the *sanitary compartment* must be provided with mechanical exhaust ventilation; and

(b) in a Class 5, 6, 7, 8 or 9 building (which is not an *early childhood centre*, primary *school* or *open spectator stand*)—

(i) access must be by an airlock, hallway or other room with a *floor area* of not less than 1.1 m^2 and fitted with *self-closing* doors at all access doorways; or

(ii) the *sanitary compartment* must be provided with mechanical exhaust ventilation and the doorway to the room adequately screened from view.

F6D11 Carparks

[2019: F4.11]

Every *storey* of a *carpark*, except an *open-deck carpark*, must have—

(a) a system of mechanical ventilation complying with AS 1668.2; or

(b) a system of natural ventilation complying with Section 4 of AS 1668.4.

F6D12 Kitchen local exhaust ventilation

[2019: F4.12]

A commercial kitchen must be provided with a kitchen exhaust hood complying with AS 1668.1 and AS 1668.2 where—

(a) any cooking apparatus has—

(i) a total maximum electrical power input exceeding 8 kW; or

(ii) a total gas power input exceeding 29 MJ/hour; or

(b) the total maximum power input to more than one apparatus exceeds, per m^2 of *floor area* of the room or enclosure—

(i) 0.5 kW electrical power; or

(ii) 1.8 MJ/hour gas.

Part F7 Sound transmission and insulation

NT Part F7

Introduction to this Part

This Part is intended to reduce the likelihood of illness or loss of *amenity* as result of undue noise transmission between different parts of a building or adjoining buildings. This Part contains minimum requirements for sound insulation for walls, floors and penetrations through walls and floors for services such as pipework.

Objectives

F7O1 Objective

[FO5]

The Objective of this Part is to safeguard occupants from illness or loss of *amenity* as a result of undue sound being transmitted—

(a) between adjoining *sole-occupancy units*; and

(b) from common spaces to *sole-occupancy units*; and

(c) from parts of different classifications to *sole-occupancy units*.

Applications

F7O1 only applies to a Class 2 or 3 building or a Class 9c building.

Functional Statements

F7F1 Sound transmission and insulation

[2019: FF5.1]

A part of a building that separates—

(a) *sole-occupancy units*; or

(b) a *sole-occupancy unit* from a part of another classification in the building; or

(c) a *sole-occupancy unit* from a common space,

is to be constructed to prevent undue sound transmission.

Applications

F7F1 only applies to a Class 2 or 3 building or a Class 9c building.

Performance Requirements

F7P1 Sound transmission through floors

[2019: FP5.1]

A floor separating *sole-occupancy units* or a *sole-occupancy unit* from a plant room, lift *shaft*, stairway, *public corridor*,

public lobby, or the like, or parts of a different classification, must minimise the transmission of airborne and impact generated sound such that the separating floor, including the effect of services and their penetrations, has—

(a) a weighted standardised level difference with spectrum adaptation term ($D_{nT,w} + C_{tr}$) not less than 45 for airborne sound; and

(b) a weighted standardised impact sound pressure level ($L_{nT,w}$) not more than 62 for impact generated sound.

Applications

F7P1 only applies to a Class 2 or 3 building.

F7P2 Sound transmission through walls

[2019: FP5.2]

A wall, including services and their penetrations, must minimise the transmission of sound such that—

(a) for airborne sound—

(i) a wall separating *sole-occupancy units* has a weighted standardised level difference with spectrum adaptation term ($D_{nT,w} + C_{tr}$) not less than 45; and

(ii) a wall separating a *sole-occupancy unit* from a plant room, lift *shaft*, stairway, *public corridor*, public lobby, or the like, or parts of a different classification, has a weighted standardised level difference ($D_{nT,w}$) not less than 45; and

(iii) any door assembly located in a wall that separates a *sole-occupancy unit* from a stairway, *public corridor*, public lobby, or the like, has a weighted standardised level difference ($D_{nT,w}$) not less than 25; and

(b) for impact generated sound, a wall must have sufficient sound insulation to prevent illness or loss of amenity to the occupants if the wall separates—

(i) a bathroom, *sanitary compartment*, laundry or kitchen in one *sole-occupancy unit* from a *habitable room* (other than a kitchen) in an adjoining *sole-occupancy unit*; or

(ii) a *sole-occupancy unit* from a plant room or lift *shaft*.

Applications

F7P2 only applies to a Class 2 or 3 building.

F7P3 Sound transmission through floors in a residential care building

[2019: FP5.4]

A floor separating *sole-occupancy units* must minimise the transmission of airborne and impact generated sound such that the separating floor, including the effect of services and their penetrations, has—

(a) a weighted standardised level difference ($D_{nT,w}$) not less than 40 for airborne sound; and

(b) a weighted standardised impact sound pressure level ($L_{nT,w}$) not more than 62 for impact generated sound.

Applications

F7P3 only applies to a Class 9c building.

F7P4 Sound transmission through walls in a residential care building

[2019: FP5.5]

(1) A wall separating *sole-occupancy units*, or a *sole-occupancy unit* from a kitchen, bathroom, *sanitary compartment* (not being an associated ensuite), laundry, plant room or utilities room, including the effect of services and their penetrations, must minimise the transmission of—

(a) airborne sound such that the wall has a weighted standardised level difference ($D_{nT,w}$) not less than 40; and

(b) impact generated sound, if the wall separates a *sole-occupancy unit* from a kitchen or laundry.

(2) Sound insulation *required* by (1) must be sufficient to prevent illness or loss of amenity to the occupants.

Applications

F7P4 only applies to a Class 9c building.

Verification Methods

F7V1 Sound transmission through floors [F7P1]

[2019: FV5.1]

Compliance with F7P1 to avoid the transmission of airborne and impact generated sound through floors is verified when it is measured in-situ that the separating floor has—

(a) airborne: a weighted standardised level difference with spectrum adaptation term ($D_{nT,w}$ + C_{tr}) not less than 45 when determined under AS/NZS ISO 717.1; and

(b) impact: a weighted standardised impact sound pressure level ($L_{nT,w}$) not more than 62 when determined under AS ISO 717.2.

F7V2 Sound transmission through walls [F7P2(a)]

[2019: FV5.2]

Compliance with F7P2(a) to avoid the transmission of airborne sound through walls is verified when it is measured in-situ that—

(a) a wall separating *sole-occupancy units* has a weighted standardised level difference with spectrum adaptation term ($D_{nT,w}$ + C_{tr}) not less than 45 when determined under AS/NZS ISO 717.1; or

(b) a wall separating a *sole-occupancy unit* from a plant room, lift *shaft*, stairway, *public corridor*, public lobby, or the like, or parts of a different classification, has a weighted standardised level difference ($D_{nT,w}$) not less than 45 when determined under AS/NZS ISO 717.1; or

(c) any door assembly located in a wall that separates a *sole-occupancy unit* from a stairway, *public corridor*, public lobby, or the like, has a weighted standardised level difference ($D_{nT,w}$) not less than 25 when determined under AS/NZS ISO 717.1.

F7V3 Sound transmission through floors [F7P3]

[2019: FV5.3]

Compliance with F7P3 to avoid the transmission of airborne and impact generated sound through floors is verified when it is measured in-situ that the separating floor has—

(a) airborne: a weighted standardised level difference ($D_{nT,w}$) not less than 40 when determined under AS/NZS ISO 717.1; and

(b) impact: a weighted standardised impact sound pressure level ($L_{nT,w}$) not more than 62 when determined under AS ISO 717.2.

F7V4 Sound transmission through walls [F7P4(1)(a) and (2)]

[2019: FV5.4]

Compliance with F7P4(1)(a) and (2) to avoid the transmission of airborne sound through walls is verified when it is measured in-situ that—

(a) a wall separating *sole-occupancy units* has a weighted standardised level difference ($D_{nT,w}$) not less than 40 when determined under AS/NZS ISO 717.1; or

(b) a wall separating a *sole-occupancy unit* from a kitchen, bathroom, sanitary compartment (not being an associated ensuite), laundry, plant room or utilities room has a weighted standardised level difference ($D_{nT,w}$) not less than 40 when determined under AS/NZS ISO 717.1.

Deemed-to-Satisfy Provisions

F7D1 Deemed-to-Satisfy Provisions

[2019: F5.0]

(1) Where a *Deemed-to-Satisfy Solution* is proposed, *Performance Requirements* F7P1 to F7P4 are satisfied by complying with F7D2 to F7D8.

(2) Where a *Performance Solution* is proposed, the relevant *Performance Requirements* must be determined in accordance with A2G2(3) and A2G4(3) as applicable.

F7D2 Application of Part

[2019: F5.1]

The *Deemed-to-Satisfy Provisions* of this Part apply to Class 2 and 3 buildings and Class 9c buildings.

F7D3 Determination of airborne sound insulation ratings

[2019: F5.2]

A form of construction *required* to have an airborne sound insulation rating must—

(a) have the *required* value for weighted sound reduction index (R_w) or weighted sound reduction index with spectrum adaptation term ($R_w + C_{tr}$) determined in accordance with AS/NZS ISO 717.1 using results from laboratory measurements; or

(b) comply with Specification 28.

F7D4 Determination of impact sound insulation ratings

[2019: F5.3]

(1) A floor in a building *required* to have an impact sound insulation rating must—

(a) have the *required* value for weighted normalised impact sound pressure level ($L_{n,w}$) determined in accordance with AS ISO 717.2 using results from laboratory measurements; or

(b) comply with Specification 28.

(2) A wall in a building *required* to have an impact sound insulation rating must—

(a) for a Class 2 or 3 building be of discontinuous construction and

(b) for a Class 9c building, must—

(i) for other than masonry, be two or more separate leaves without rigid mechanical connection except at the periphery; or

(ii) be identical with a prototype that is no less resistant to the transmission of impact sound when tested in accordance with Specification 29 than a wall listed in S28C4 to S28C7.

(3) For the purposes of this Part, discontinuous construction means a wall having a minimum 20 mm cavity between 2 separate leaves, and—

(a) for masonry, where wall ties are required to connect leaves, the ties are of the resilient type; and

(b) for other than masonry, there is no mechanical linkage between leaves except at the periphery.

F7D5 Sound insulation rating of floors

[2019: F5.4]

(1) A floor in a Class 2 or 3 building must have an $R_w + C_{tr}$ (airborne) not less than 50 and an $L_{n,w}$ (impact) not more than 62 if it separates—

(a) *sole-occupancy units*; or

(b) a *sole-occupancy unit* from a plant room, lift *shaft*, stairway, *public corridor*, public lobby or the like, or parts of a different classification.

(2) A floor in a Class 9c building separating *sole-occupancy units* must have an R_w not less than 45.

F7D6 Sound insulation rating of walls

[2019: F5.5]

(1) A wall in a Class 2 or 3 building must—

(a) have an $R_w + C_{tr}$ (airborne) not less than 50, if it separates *sole-occupancy units*; and

(b) have an R_w (airborne) not less than 50, if it separates a *sole-occupancy unit* from a plant room, lift *shaft*, stairway, *public corridor*, public lobby or the like, or parts of a different classification; and

(c) comply with F7D4(2) if it separates—

(i) a bathroom, *sanitary compartment*, laundry or kitchen in one *sole-occupancy unit* from a *habitable room* (other than a kitchen) in an adjoining unit; or

(ii) a *sole-occupancy unit* from a plant room or lift *shaft*.

(2) A door may be incorporated in a wall in a Class 2 or 3 building that separates a *sole-occupancy unit* from a stairway, *public corridor*, public lobby or the like, provided the door assembly has an R_w not less than 30.

(3) A wall in a Class 9c building must have an R_w not less than 45 if it separates—

(a) *sole-occupancy units*; or

(b) a *sole-occupancy unit* from a kitchen, bathroom, *sanitary compartment* (not being an associated ensuite), laundry, plant room or utilities room.

(4) In addition to (3), a wall separating a *sole-occupancy unit* in a Class 9c building from a kitchen or laundry must comply with F7D4(2).

(5) Where a wall *required* to have sound insulation has a floor above, the wall must continue to—

(a) the underside of the floor above; or

(b) a ceiling that provides the sound insulation *required* for the wall.

(6) Where a wall *required* to have sound insulation has a roof above, the wall must continue to—

(a) the underside of the roof above; or

(b) a ceiling that provides the sound insulation *required* for the wall.

F7D7 Sound insulation rating of internal services

[2019: F5.6]

(1) If a duct or soil, waste or water supply pipe, including a duct or pipe that is located in a wall or floor cavity, serves or passes through more than one *sole-occupancy unit*, the duct or pipe must be separated from the rooms of any *sole-occupancy unit* by construction with an $R_w + C_{tr}$ (airborne) not less than—

(a) 40 if the adjacent room is a *habitable room* (other than a kitchen); or

(b) 25 if the adjacent room is a kitchen or non-*habitable room*.

(2) If a stormwater pipe passes through a *sole-occupancy unit*, it must be separated in accordance with (1)(a) and (b).

F7D8 Sound isolation of pumps

[2019: F5.7]

A flexible coupling must be used at the point of connection between the service pipes in a building and any circulating or other pump.

Part F8 Condensation management

Introduction to this Part

This Part is intended to reduce the risk of illness or loss of *amenity* due to the occurrence of condensation inside a building. It does this by requiring features that enable moisture-laden air to be removed from inside the building and the building structure.

Notes

From 1 May 2023 to 30 September 2023 Part F6 of NCC 2019 Volume One Amendment 1 may apply instead of Part F8 of NCC 2022 Volume One. From 1 October 2023 Part F8 of NCC 2022 Volume One applies.

Objectives

F8O1 Objective

[2019: FO6]

The Objective of this Part is to safeguard occupants from illness or loss of *amenity* as a result of excessive internal moisture.

Applications

F8O1 only applies to a *sole-occupancy unit* of a Class 2 building or Class 4 part of a building.

Functional Statements

F8F1 Condensation

[2019: FF6.1]

A building is to be constructed to avoid the likelihood of excessive internal moisture accumulating within the building structure.

Applications

F8F1 only applies to a *sole-occupancy unit* of a Class 2 building or Class 4 part of a building.

Performance Requirements

TAS F8P1

F8P1 Condensation and water vapour management

[2019: FP6.1]

Risks associated with water vapour and *condensation* must be managed to minimise their impact on the health of occupants.

Applications

F8P1 only applies to a *sole-occupancy unit* of a Class 2 building or Class 4 part of a building.

Verification Methods

F8V1 Condensation management

[2019: FV6]

(1) Compliance with *Performance Requirement* F8P1 is verified for a roof or *external wall* assembly when it is determined that a mould index of greater than 3, as defined by Section 6 of AIRAH DA07, does not occur on—

(a) the interior surface of the *water control layer*; or

(b) the surfaces of building *fabric* components interior to the *water control layer*.

(2) The calculation method for (1) must use—

(a) input assumptions in accordance with AIRAH DA07; and

(b) the intermediate method for calculating indoor design humidity in Section 4.3.2 of AIRAH DA07.

Deemed-to-Satisfy Provisions

F8D1 Deemed-to-Satisfy Provisions

[2019: F6.0]

(1) Compliance with *Performance Requirement* F8P1 is satisfied by complying with *Deemed-to-Satisfy Provisions* F8D2 to F8D5.

(2) Where a *Performance Solution* is proposed, the relevant *Performance Requirements* must be determined in accordance with A2G2(3) and A2G4(3) as applicable.

Explanatory Information

The intent of these requirements is to assist in the mitigation of *condensation* within a building. The implementation of a *condensation* management strategy may not prevent *condensation* from occurring.

F8D2 Application of Part

[2019: F6.1]

The *Deemed-to-Satisfy Provisions* of this Part only apply to a *sole-occupancy unit* of a Class 2 building and a Class 4 part of a building.

F8D3 External wall construction

[2019: F6.2]

(1) Where a *pliable building membrane* is installed in an *external wall*, it must—

(a) comply with AS 4200.1; and

(b) be installed in accordance with AS 4200.2; and

(c) be located on the exterior side of the *primary insulation layer* of wall assemblies that form the external envelope of a building.

(2) Where a *pliable building membrane*, *sarking-type material* or insulation layer is installed on the exterior side of the *primary insulation layer* of an *external wall* it must have a *vapour permeance* of not less than—

(a) in *climate zones* 4 and 5, 0.143 µg/N.s; and

(b) in *climate zones* 6, 7 and 8, 1.14 µg/N.s.

(3) Except for single skin masonry and single skin concrete, where a *pliable building membrane* is not installed in an *external wall*, the primary *water control layer* must be separated from *water sensitive materials* by a drained cavity.

Explanatory Information

F8D3(2) requires some wall materials on the external side of the *primary insulation layer* to have a minimum level of *vapour permeance*. *Vapour permeance* is measured in µg/N.s (micrograms per newton-second).

Class 3 and 4 vapour control membranes (as defined by clause 5.3.4 of AS 4200.1) meet the *vapour permeance* requirements of F8D3(2)(a), while Class 4 vapour control membranes meet the *vapour permeance* requirements of F8D3(2)(b).

Open-cell insulation, such as mineral wool or fibreglass, typically has a high *vapour permeance*, while closed-cell insulation such as polystyrene typically has a low *vapour permeance*. Many foil-faced insulation products have a low *vapour permeance*.

F8D4 Exhaust systems

[2019: F6.3]

(1) An exhaust system installed in a kitchen, bathroom, *sanitary compartment* or laundry must have a minimum flow rate of—

(a) 25 L/s for a bathroom or *sanitary compartment*; and

(b) 40 L/s for a kitchen or laundry.

(2) Exhaust from a kitchen, kitchen range hood, bathroom, *sanitary compartment* or laundry must discharge directly or via a shaft or duct to *outdoor air*.

(3) Where space for a clothes drying appliance is provided in accordance with F4D2(1)(b), space must also be provided for ducting from the clothes drying appliance to *outdoor air*.

(4) (3) does not apply if a condensing-type clothes drying appliance is installed.

(5) An exhaust system that is not run continuously and is serving a bathroom or *sanitary compartment* that is not ventilated in accordance with F6D7 must—

(a) be interlocked with the room's light switch; and

(b) include a run-on timer so that the exhaust system continues to operate for 10 minutes after the light switch is turned off.

(6) Except for rooms that are ventilated in accordance with F6D7, a room with space for ducting a clothes drying appliance to *outdoor air* in accordance with (3) must be provided with make-up air in accordance with AS 1668.2

Explanatory Information

A range hood installed in a kitchen must comply with F8D4(2).

Part F6 includes other ventilation requirements which must be met, including a requirement for make-up air to be provided to mechanically ventilated rooms in accordance with AS 1668.2.

F8D5 Ventilation of roof spaces

[2019: F6.4]

(1) In *climate zones* 6, 7 and 8, a roof must have a roof space that—

(a) is located—

(i) immediately above the *primary insulation layer*; or

(ii) immediately above sarking with a *vapour permeance* of not less than 1.14 µg/N.s, which is immediately above the *primary insulation layer*; or

(iii) immediately above ceiling insulation which meets the requirements of J3D7(3) and J3D7(4); and

(b) has a height of not less than 20 mm; and

(c) is either—

(i) ventilated to *outdoor air* through evenly distributed openings in accordance with Table F8D5; or

(ii) located immediately underneath roof tiles of an unsarked tiled roof.

(2) The requirements of (1) do not apply to a—

(a) concrete roof; or

(b) roof that is made of structural insulated panels; or

(c) roof that is subject to Bushfire Attack Level FZ requirements in accordance with AS 3959.

Table F8D5: Roof space ventilation requirements

Roof pitch	Ventilation openings
<10°	25,000 mm^2/m provided at each of two opposing ends
≥10° and <15°	25,000 mm^2/m provided at the eaves and 5,000 mm^2/m at high level
≥15° and <75°	7,000 mm^2/m provided at the eaves and 5,000 mm^2/m at high level, plus an additional 18,000 mm^2/m at the eaves if the roof has a cathedral ceiling

Table Notes

(1) Ventilation openings are specified as a minimum free open area per metre length of the longest horizontal dimension of the roof.

(2) For the purposes of this table, high level openings are openings provided at the ridge or not more than 900 mm below the ridge or highest point of the roof space, measured vertically.

Specification 26 Waterproofing and water-resistance requirements for building elements in wet areas

S26C1 Scope

[2019: Table F1.7]

This Specification sets out requirements for building elements in *wet areas* that are *required* to be—

(a) *water resistant*; or

(b) *waterproof*.

S26C2 Application

[2019: Table F1.7]

(1) The requirements of this Specification apply to—

(a) *shower areas* (enclosed and unenclosed); and

(b) areas outside a *shower area*; and

(c) areas adjacent to baths and spas; and

(d) other areas as set out in clause S26C6.

(2) Where a shower is above a bath or spa, use requirements for a shower.

S26C3 Shower area (enclosed and unenclosed)

[2019: Table F1.7]

(1) For a *shower area* with a hob, step-down or level threshold, the following applies:

(a) The floor of the *shower area* must be *waterproof*, including any hob or step-down; and

(b) The walls of the *shower area* must be *waterproof* not less than 1800 mm above the floor substrate.

(c) Wall junctions and joints within the *shower area* must be *waterproof*.

(d) Wall/floor junctions within the *shower area* must be *waterproof*.

(e) Penetrations within the *shower area* must be *waterproof*.

(2) A shower with a *preformed shower base* must also comply with the requirements of (1), except for (a) which is not applicable.

S26C4 Area outside shower area

[2019: Table F1.7]

(1) For concrete, compressed fibre-cement and fibre-cement sheet flooring, the floor of the room must be *water resistant*.

(2) For timber floors including particleboard, plywood and other timber based flooring materials, the floor of the room must be *waterproof*.

(3) Wall/floor junctions must be *waterproof*.

S26C5 Areas adjacent to baths and spas without showers

[2019: Table F1.7]

(1) For areas adjacent to a bath and spa, the following applies:

(a) For concrete, compressed fibre-cement and fibre-cement sheet flooring, the floor of the room must be *water*

resistant.

(b) For timber floors including particleboard, plywood and other timber based flooring materials, the floor of the room must be *waterproof*.

(c) Tap and spout penetrations must be *waterproof* where they occur in horizontal surfaces.

(2) For areas adjacent to a non-freestanding bath and spa, the following applies:

(a) Walls must be *water resistant*—

(i) to a height of not less than 150 mm above the *vessel*, for the extent of the *vessel*, where the *vessel* is within 75 mm of a wall; and

(ii) at all exposed surfaces below *vessel* lip.

(b) Wall junctions and joints must be *water resistant* within 150 mm above a *vessel* for the extent of the *vessel*.

(c) Wall/floor junctions must be *waterproof* for the extent of the *vessel*.

(3) For inserted baths and spas, the following applies:

(a) For floors and horizontal surfaces:

(i) Any shelf area adjoining the bath or spa must be *waterproof* and include a *waterstop* under the *vessel* lip.

(ii) There are no requirements for the floor under a bath or spa.

(b) For walls:

(i) *Waterproof* to not less than 150 mm above the lip of a bath or spa.

(ii) There are no requirements for walls beneath the lip of a bath or spa.

(c) For wall junctions and joints:

(i) *Waterproof* junctions within 150 mm of a bath or spa.

(ii) There are no requirements for junctions and joints in walls beneath the lip of a bath or spa.

(d) Tap and spout penetrations must be *waterproof* where they occur in horizontal surfaces.

S26C6 Other areas

[2019: Table F1.7]

(1) For walls adjoining other types of *vessels* (e.g. sink, basin or laundry tub), the following applies:

(a) Walls must be *water resistant* to a height of not less than 150 mm above the *vessel*, for the extent of the *vessel*, where the *vessel* is within 75 mm of a wall.

(b) *Waterproof* wall junctions where a *vessel* is fixed to a wall.

(c) *Waterproof* tap and spout penetrations where they occur in surfaces *required* to be *waterproof* or *water resistant*.

(2) For laundries and WCs, other than WCs as described in (3), the following applies:

(a) *Water resistant* floor of the room.

(b) *Water resistant* wall/floor junctions.

(c) *Waterproof* penetrations where they occur in surfaces *required* to be *waterproof*.

(3) For WCs with a handheld bidet spray installation, the following applies:

(a) *Waterproof* floor of the room.

(b) Walls must be—

(i) *waterproof* within a 1500 mm radius from the wall connection of the handheld bidet spray device to a height of not less than 150 mm above the floor substrate; and

(ii) *water resistant* within a 1500 mm radius from the wall connection of the handheld bidet spray device to a height of not less than 1200 mm above the finished floor level of the WC.

(c) *Waterproof* wall junctions within the WC area within 1500 mm radius from the wall connection of the handheld bidet spray device.

(d) *Waterproof* wall/floor junctions within the WC area within 1500 mm radius from the wall connection of the handheld bidet spray device.

(e) *Waterproof* penetrations in WC area.

(4) For bathrooms and laundries *required* to be provided with a *floor waste* by F2D4, the following applies:

(a) *Waterproof* floor of the room.

(b) *Waterproof* wall/floor junctions.

(c) *Waterproof* penetrations where they occur through the floor.

Specification 27 Accessible adult change facilities

S27C1 Scope

[2019: Spec F2.9: 1]

This Specification contains the requirements for *accessible* adult change facilities.

S27C2 General requirements

[2019: Spec F2.9: 2]

(1) Each *accessible* adult change facility must—

(a) be constructed so that all *required* equipment and fixtures are contained within the same room; and

(b) if it is a unisex facility, be located such that it can be entered without crossing an area reserved for one sex only.

(2) In each *accessible* adult change facility, the following must be provided:

(a) A hoist complying with S27C3.

(b) A toilet pan, seat, backrest and grabrails complying with S27C4.

(c) A washbasin and tap complying with S27C5.

(d) Fixtures and fittings as specified in S27C6.

(e) A change table complying with S27C7.

(f) Changing rails complying with S27C8.

(g) An automated sliding entrance door complying with S27C9.

(h) Signage complying with S27C10.

(i) Operating instructions for the hoist and change table in accordance with S27C11.

(j) Circulation spaces complying with Figures S27C2a, S27C2b and S27C2c.

(3) The floor surface must have a slip resistance classification of not less than R10 or P3 when tested in accordance with AS 4586.

(4) For the purposes of Figures S27C2a, S27C2b and S27C2c, the following applies:

(a) The Roman numerals shown in Figures S27C2a, S27C2b and S27C2c indicate the following *required* circulation spaces:

(i) Turning space: a full circle of 1125 mm radius.

(ii) Each side of the pan: 900 mm (measured from each edge of the pan).

(iii) In front of the pan: 2350 mm (measured from the wall behind the pan, and therefore includes the pan itself).

(iv) For a washbasin: the width of the basin (450 mm) increasing to a width of 1350 mm measured at a distance of 750 mm out from the wall against which the washbasin is mounted then continuing at that width for a further 800 mm (to a total of 1550 mm out from the wall).

(v) For changing rails: the width of the rails increasing to a width of 1350 mm at a distance of 750 mm out from the wall to which the rails are fixed then continuing at that width for a further 800 mm (to a total of 1550 mm out from the wall).

(b) All *required* circulation spaces must extend for a minimum height of 2000 mm above finished floor level.

(c) *Required* circulation spaces may be overlapped.

Figure S27C2a: Required circulation spaces — Turning space, each side of the pan and in front of the pan

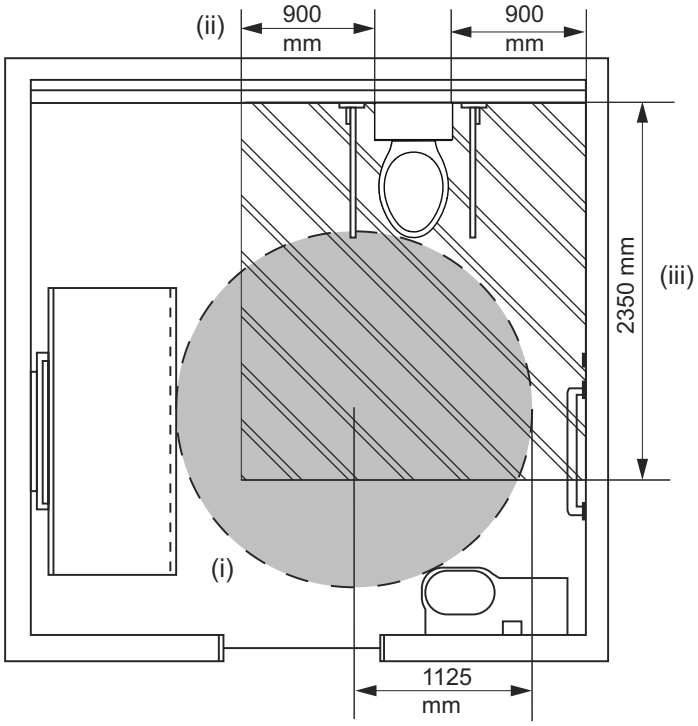

Figure S27C2b: Required circulation spaces — Turning space and circulation space for a washbasin

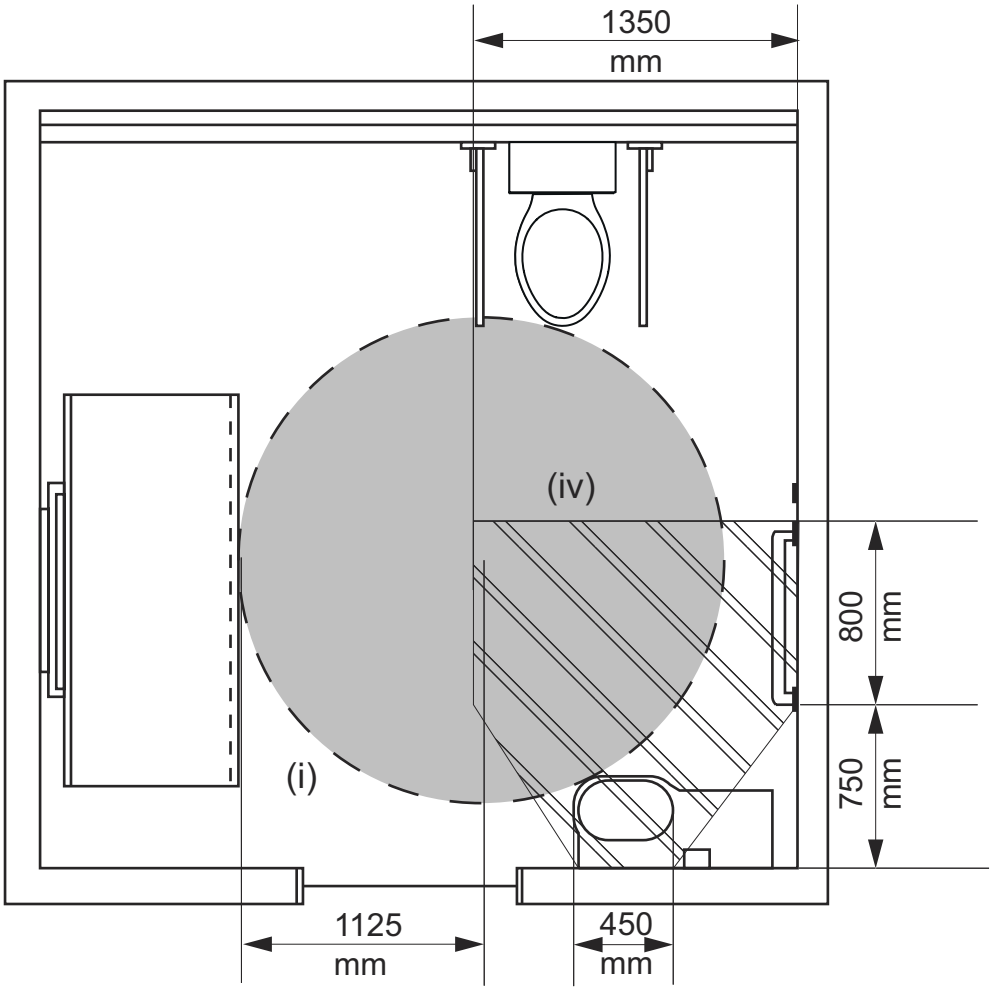

Figure S27C2c: Required circulation spaces — Turning space and circulation space for changing rails

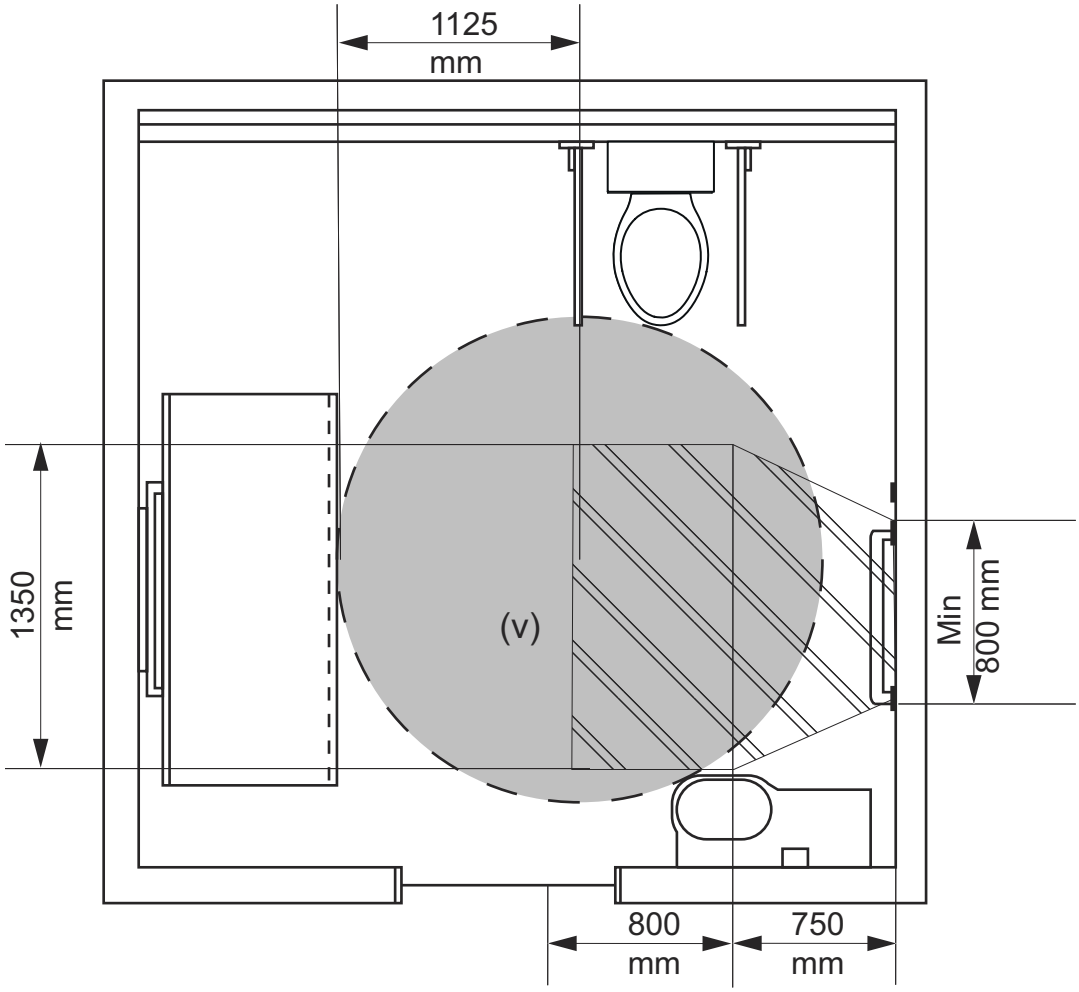

S27C3 Hoist

[2019: Spec F2.9: 3]

The hoist must—

(a) provide a constant charge in-line room coverage hoist system (also known as an "XY" system or gantry) including 2 parallel fixed rails and a moving traverse rail; and

(b) provide coverage over the entire room; and

(c) have a maximum safe working load of not less than 180 kg; and

(d) be capable of sustaining a static load of not less than 1.5 times the rated load; and

(e) have a minimum lifting height of 2100 mm.

S27C4 Toilet pan, seat, backrest and grabrails

[2019: Spec F2.9: 4]

(1) The toilet pan must be of the centrally located ("peninsula-type") design.

(2) The toilet pan must be installed so that—

(a) the front edge of the pan is 800 mm (±10 mm) from the rear wall; and

(b) the top of the seat is between 460 mm and 480 mm above finished floor level; and

(c) there is a minimum clearance of 900 mm, measured horizontally, between each side of the pan and any adjacent wall or privacy screen.

(3) The toilet seat must—

(a) be of the full-round type (not open-fronted) with minimal contours to the top surface; and

(b) be securely fixed in position when in use; and

(c) have seat fixings that provide lateral stability to the seat when the seat is in use; and

(d) be load-rated to 150 kg; and

(e) have a minimum *luminance contrast* of 30% against the pan, wall or floor; and

(f) remain in the fully upright position when raised.

(4) A hand-operated flushing control must—

(a) be located on the centreline of the toilet, at a height above finished floor level of—

(i) not less than 600 mm; and

(ii) not more than 1100 mm; and

(b) not be located within the area *required* for any grabrails or backrest; and

(c) have the button mounted so that it is proud of the wall surface, and activates the flushing operation before the button becomes level with the surrounding surface.

(5) An automatically activated flushing system need not comply with the requirements of (4).

(6) The backrest must—

(a) be capable of withstanding a force, in any direction, of not less than 1100 N; and

(b) have a minimum height, between the lower edge of the backrest and the top of the seat, of between 120 mm and 150 mm; and

(c) have a vertical height, between the upper and lower edges of the backrest, of between 150 mm and 200 mm; and

(d) have a width of between 350 mm and 400 mm; and

(e) be positioned such that the face of the backrest achieves an angle of between 95° and 100° back from the seat, when the seat is in use.

(7) Grabrails must be installed adjacent to each side of the pan and must be—

(a) of the drop-down type; and

(b) located such that—

(i) the top of each rail is between 800 mm and 810 mm above finished floor level; and

(ii) the rails are between 750 mm and 770 mm apart, measured centre-to-centre, and equidistant to the centreline of the pan; and

(c) at least 850 mm long; and

(d) with a diameter of between 30 mm and 40 mm; and

(e) securely fixed to withstand a force, in any direction, of not less than 1100 N; and

(f) provided with a toilet paper dispenser on one side; and

(g) capable of being lifted up or swung away when not in use, so as to allow unimpeded access to the toilet pan.

S27C5 Washbasin and tap

[2019: Spec F2.9: 5]

(1) The washbasin must be installed so that the rim of the basin is between 800 mm and 830 mm above finished floor level.

(2) Exposed *heated water* supply pipes must be insulated or located so as not to pose a hazard.

(3) Water supply or sanitary *drainage* pipes must not encroach on the space under the basin.

(4) The washbasin must have an integrated shelf not less than 300 mm long.

(5) Water taps must have a single lever flick-mixer handle or a sensor plate or the like.

(6) Where lever handles are provided, they must be installed with a clear space of not less than 50 mm between the tap and any adjacent surface.

(7) *Heated water* must be provided and temperature controlled in accordance with Part B2 of NCC Volume Three.

S27C6 Fixtures and fittings

[2019: Spec F2.9: 6]

(1) A vertical mirror must be provided at the washbasin, with a reflective surface that—
  (a) is not less than 600 mm wide; and
  (b) has its bottom edge not more than 900 mm above finished floor level; and
  (c) has its top edge not less than 1850 mm above finished floor level.

(2) If a second vertical mirror is provided in the facility, it must have a reflective surface that—
  (a) is not less than 600 mm wide; and
  (b) has its bottom edge not less than 600 mm above finished floor level; and
  (c) has its top edge not less than 1850 mm above finished floor level.

(3) Towel dispensers, hand dryers, soap dispensers and the like must be operable using one hand, and must be installed with their output or operative components—
  (a) between 900 mm and 1100 mm above finished floor level; and
  (b) not less than 500 mm from any internal corner.

(4) A soap dispenser must be installed above the integrated shelf *required* by S27C5(4).

(5) A clothing hook must be installed so that it is located—
  (a) at a height of between 1200 mm and 1350 mm above finished floor level; and
  (b) adjacent to the washbasin; and
  (c) not less than 500 mm from any internal corner.

(6) A sling hook with a minimum projection of 50 mm from the wall must be installed beside the change table at a height of 1500 mm above finished floor level.

(7) Disposal bins must be provided as follows:
  (a) A sanitary disposal bin in the corner adjacent to the toilet pan.
  (b) An incontinence pad disposal bin in the corner adjacent to the change table.

Explanatory Information

The purpose of the sling hook is to store the sling when it is not in use.

S27C7 Change table

[2019: Spec F2.9: 7]

(1) The change table must be—
  (a) permanently installed, with one of the long edges up against a wall and with a retractable safety rail on the opposite side; and
  (b) motorised for the purposes of height adjustment; and
  (c) height adjustable between 450 mm and 900 mm above finished floor level; and
  (d) not less than 700 mm wide; and
  (e) not less than 1800 mm long.

(2) The change table must have a maximum safe working load of not less than 180 kg, including when raising or lowering the table.

(3) The change table must not encroach on any *required* circulation space.

(4) A dispenser for sanitary wipes must be provided.

(5) A shelf not less than 400 mm long and 150 mm wide must be provided.

S27C8 Changing rails

[2019: Spec F2.9: 8]

Changing rails must be installed as two horizontal and parallel rails fixed to a wall, not less than 800 mm long, each with a diameter between 30 mm and 40 mm, and—

(a) the lower rail must be installed between 800 mm and 810 mm above finished floor level; and

(b) the upper rail must be installed between 1000 mm and 1010 mm above finished floor level; and

(c) the rails must be able to withstand a force of not less than 1100 N in any direction.

S27C9 Door and door controls

[2019: Spec F2.9: 9]

The entrance door and associated door controls must be automated and must comply with the following:

(a) The threshold must incorporate a smooth transition without a step or lip.

(b) The minimum clear opening width must be—

(i) 1100 mm in locations where beach wheelchairs are likely to be used; or

(ii) 950 mm in all other locations.

(c) The doorway must achieve a *luminance contrast* of at least 30% between—

(i) door leaf and door jamb; or

(ii) door leaf and adjacent wall; or

(iii) architraves (where used) and adjacent wall; or

(iv) door leaf and architrave (where used); or

(v) door jamb and adjacent wall.

(d) The operation of the door must be calibrated such that—

(i) it has a gentle opening and closing movement; and

(ii) there is sufficient dwell time for a user to safely travel through the doorway.

(e) The door must be fitted with a fail-safe opening mechanism that opens the door if an obstruction is detected during its closing movement.

(f) Door controls must be located internally and externally—

(i) between 900 mm and 1200 mm above finished floor level; and

(ii) not less than 500 mm from any internal corner.

(g) Door control buttons must—

(i) have a minimum diameter of 25 mm; and

(ii) be proud of the surrounding surface; and

(iii) activate the door operation before the button becomes level with the surrounding surface; and

(iv) be of a contrasting colour to the surrounding plate.

(h) The surrounding plates of both internal and external door controls must include the words “Push to Open”.

(i) The following indicator lights must be provided:

(i) “Occupied” and “Vacant” on the external plate.

(ii) “Locked” and “Unlocked” on the internal plate.

(j) Braille and tactile signage complying with Specification 15 must identify the door controls.

S27C10 Signage

[2019: Spec F2.9: 10]

(1) External signage must incorporate—

(a) the symbol shown in Figure S27C10; and

(b) the words “Accessible Adult Change Facility”.

(2) The symbol *required* by (1)(a) must have a blue (B21, ultramarine) background with the hoist and table elements shown in white.

(3) Signage must be braille and tactile signage complying with Specification 15.

Figure S27C10: Accessible adult change facility symbol

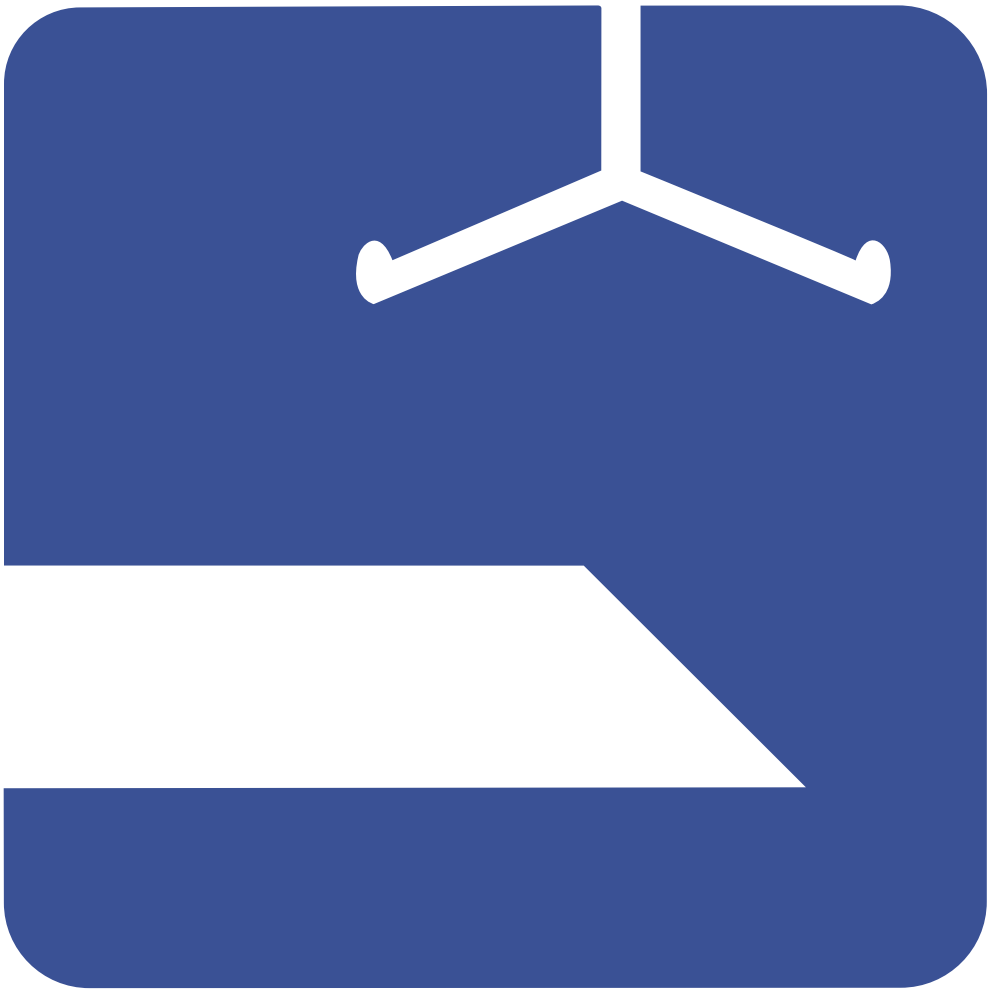

S27C11 Operating instructions

[2019: Spec F2.9: 11]

Signage provided within the facility must include the following information for the hoist and change table:

(a) Operating instructions.

(b) Safe working load limits.

Specification 28 Sound insulation for building elements

NT S28C1

S28C1 Scope

[2019: Spec F5.2: 1(a)]

This Specification lists the weighted sound reduction index R_W for some common forms of construction.

NT S28C2

S28C2 Discontinuous construction

[2019: Spec F5.2: 1(b)]

Wall systems listed in S28C4 to S28C7 having a minimum 20 mm cavity between 2 separate leaves are deemed to be discontinuous construction if—

(a) for masonry, where wall ties are required to connect leaves, the ties are of the resilient type; and

(b) for other than masonry, there is no mechanical linkage between leaves except at the periphery.

NT S28C3

S28C3 Construction Deemed-to-Satisfy

[2019: Spec F5.2: 2]

(1) The forms of wall construction described in S28C4 to S28C7 and floor construction described in S28C8 to S28C10, are considered to have the R_w, $R_w + C_{tr}$ and $L_{n,w}$ stated in those clauses.

(2) The forms of construction referred to in (1) must be installed as follows:

(a) Masonry units must be laid with all joints filled solid, including those between the masonry and any adjoining construction.

(b) Joints between concrete slabs or panels and any adjoining construction must be filled solid.

(c) For sheeting materials—

(i) if one layer is *required* on both sides of a wall, it must be fastened to the studs with joints staggered on opposite sides; and

(ii) if two layers are *required*, the second layer must be fastened over the first layer so that the joints do not coincide with those of the first layer; and

(iii) joints between sheets or between sheets and any adjoining construction must be taped and filled solid.

(d) Timber or steel-framed construction — perimeter framing members must be securely fixed to the adjoining structure and—

(i) bedded in resilient compound; or

(ii) the joints must be caulked so that there are no voids between the framing members and the adjoining structure.

(e) Services must not be chased into concrete or masonry elements.

(f) A door or panel *required* to have a certain $R_w + C_{tr}$ that provides access to a duct, pipe or other service must—

(i) not open into any *habitable room* (other than a kitchen); and

(ii) be firmly fixed so as to overlap the frame or rebate of the frame by not less than 10 mm, be fitted with a sealing gasket along all edges and be constructed of—

(A) wood, particleboard or blockboard not less than 33 mm thick; or

(B) compressed fibre-reinforced cement sheeting not less than 9 mm thick; or

(C) other suitable material with a mass per unit area not less than 24.4 kg/m^2.

(g) A water supply pipe must—

(i) only be installed in the *cavity* of discontinuous construction; and

(ii) in the case of a pipe that serves only one *sole-occupancy unit*, not be fixed to the wall leaf on the side adjoining any other *sole-occupancy unit* and have a clearance not less than 10 mm to the other wall leaf.

(h) Electrical outlets must be offset from each other—

(i) in masonry walling, not less than 100 mm; and

(ii) in timber or steel-framed walling, not less than 300 mm.

S28C4 Acceptable forms of construction for walls — masonry

[2019: Spec F5.2: Table 2]

(1) Acceptable forms of construction for masonry walls are set out in (2) to (9).

(2) Two leaves of 110 mm clay brick masonry with—

(a) a *cavity* of not less than 50 mm between leaves; and

(b) 50 mm thick glass wool insulation with a density of 11 kg/m^3 or 50 mm thick polyester insulation with a density of 20 kg/m^3 in the *cavity*,

has an $R_w + C_{tr}$ of not less than 50 and an R_w of not less than 50, if constructed as shown in Figure S28C4a.

(3) Two leaves of 110 mm clay brick masonry with—

(a) a *cavity* of not less than 50 mm between leaves; and

(b) 13 mm cement render on each outside face,

has an $R_w + C_{tr}$ of not less than 50 and an R_w of not less than 50, when constructed as shown in Figure S28C4b.

(4) A single leaf of 110 mm clay brick masonry with—

(a) a row of 70 mm x 35 mm timber studs or 64 mm steel studs at 600 mm centres, spaced 20 mm from the masonry wall; and

(b) 50 mm thick glass or mineral wool insulation with a density of 11 kg/m^3 positioned between studs; and

(c) one layer of 13 mm plasterboard fixed to outside face of studs and outside face of masonry,

has an $R_w + C_{tr}$ of not less than 50 and an R_w of not less than 50, if constructed as shown in Figure S28C4c.

(5) A single leaf of 90 mm clay brick masonry with—

(a) a row of 70 mm x 35 mm timber studs or 64 mm steels studs at 600 mm centres, spaced 20 mm from each face of the masonry wall; and

(b) 50 mm thick glass or mineral wool insulation with a density of 11 kg/m^3 positioned between studs in each row; and

(c) one layer of 13 mm plasterboard fixed to studs on each outside face,

has an $R_w + C_{tr}$ of not less than 50 and an R_w of not less than 50, if constructed as shown in Figure S28C4d.

(6) A single leaf of 150 mm brick masonry with 13 mm cement render on each face has an R_w of not less than 50 if constructed as shown in Figure S28C4e.

(7) A single leaf of 220 mm brick masonry with 13 mm cement render on each face has an $R_w + C_{tr}$ of not less than 50 and an R_w of not less than 50, if constructed as shown in Figure S28C4f.

(8) 110 mm thick brick masonry with 13 mm cement render on each face has an R_w of not less than 45 if constructed as shown in Figure S28C4g.

(9) 110 mm thick concrete brickwork has an R_w of not less than 45 if constructed as shown in Figure S28C4h.

Figure S28C4a: Two leaves of 110 mm clay brick masonry (method 1)

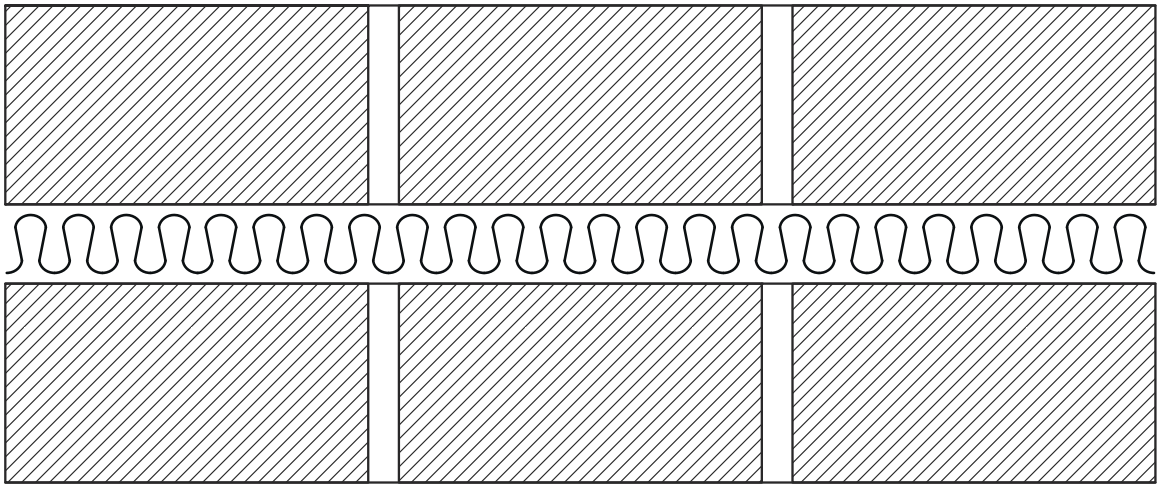

Figure S28C4b: Two leaves of 110 mm clay brick masonry (method 2)

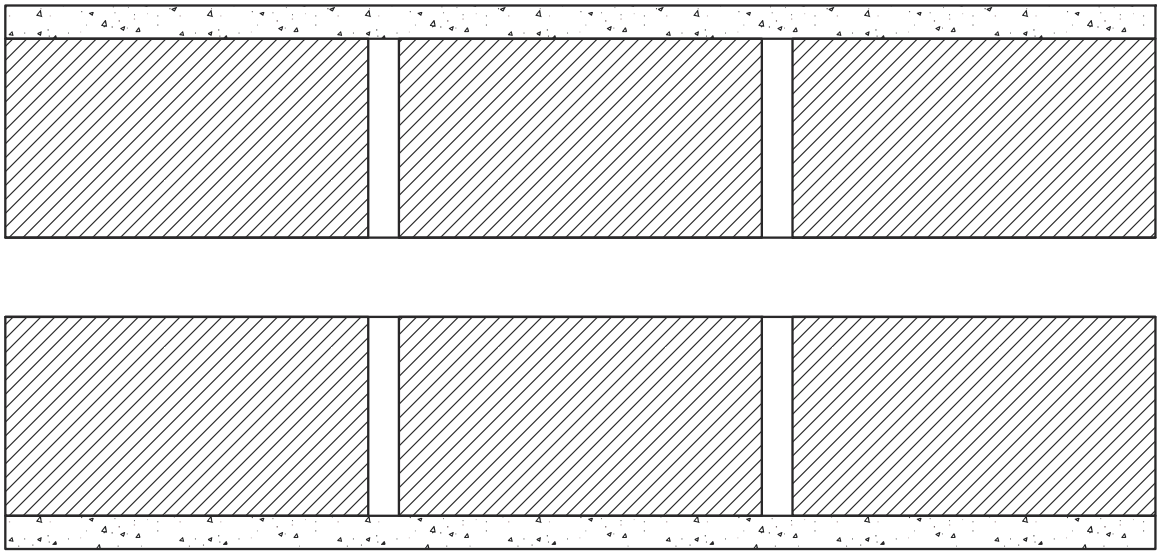

Figure S28C4c: Single leaf of 110 mm clay brick masonry

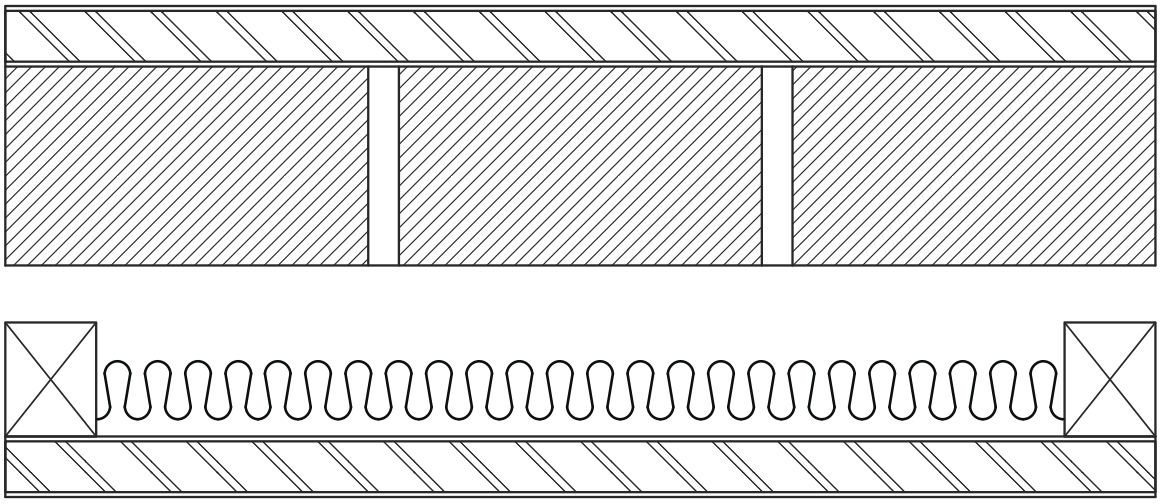

Figure S28C4d: Single leaf of 90 mm clay brick masonry

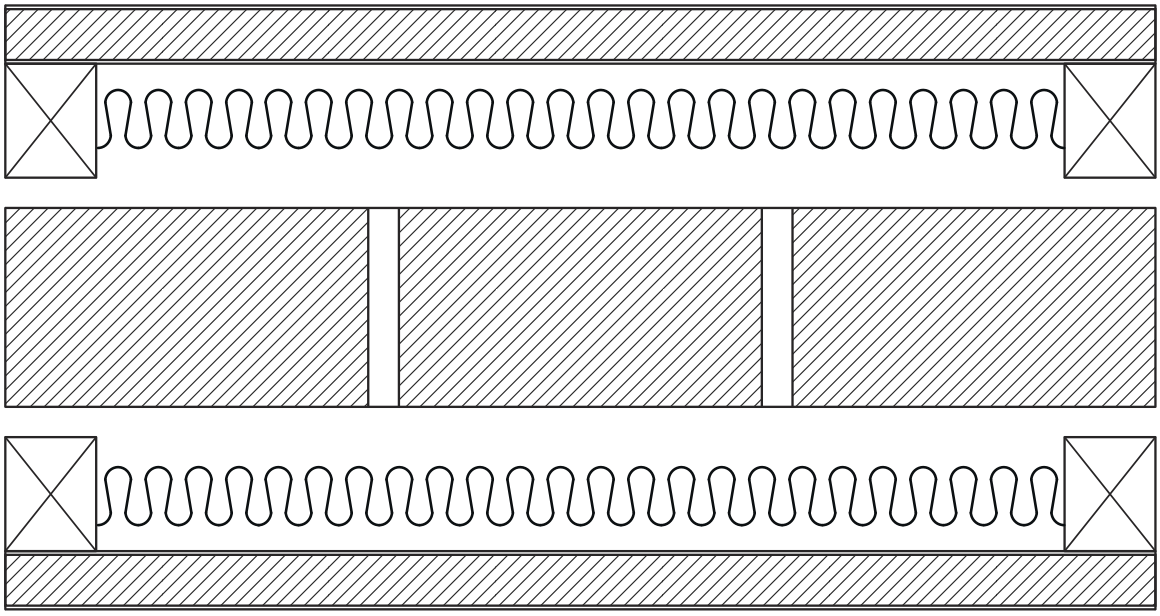

Figure S28C4e: Single leaf of 150 mm brick masonry with 13 mm cement render on each face

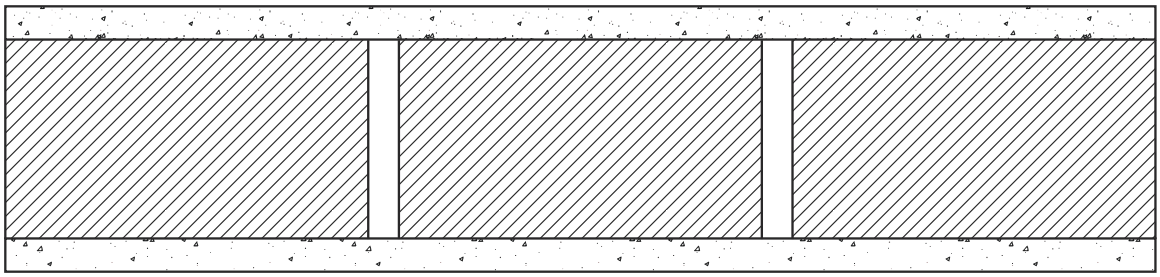

Figure S28C4f: Single leaf of 220 mm brick masonry with 13 mm cement render on each face

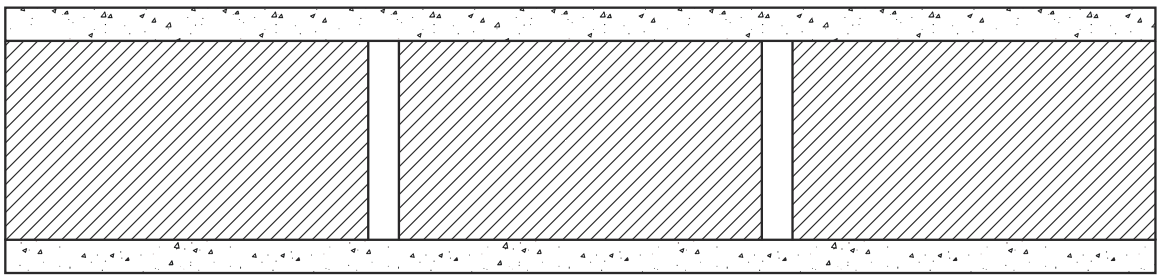

Figure S28C4g: 110 mm thick brick masonry with 13 mm cement render on each face

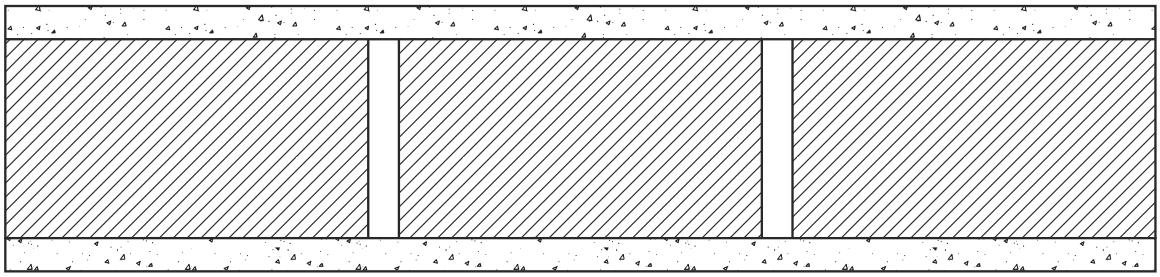

Figure S28C4h: 110 mm thick concrete brickwork

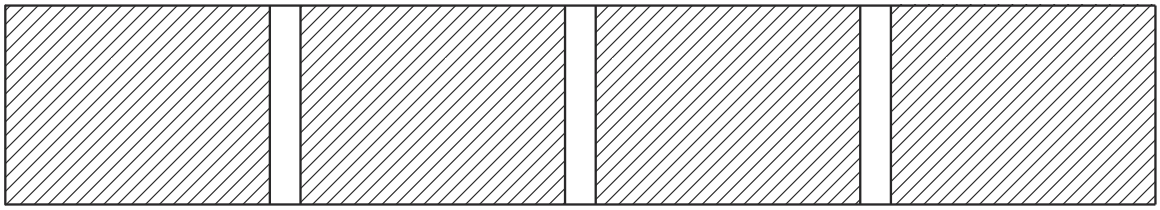

S28C5 Acceptable forms of construction for walls — concrete

[2019: Spec F5.2: Table 2]

(1) Acceptable forms of construction for concrete walls are set out in (3) to (12).

(2) For the purposes of this clause, the term 'concrete panel' is a reference to a solid in-situ concrete panel or solid pre-cast concrete panel.

(3) A 150 mm thick concrete panel has an $R_w + C_{tr}$ of not less than 50 and an R_w of not less than 50, if constructed as shown in Figure S28C5a.

(4) A 150 mm thick concrete panel with one layer of 10 mm plasterboard fixed to 28 mm metal furring channels on each face, has an R_w of not less than 50, if constructed as shown in Figure S28C5b.

(5) A 200 mm thick concrete panel with one layer of 13 mm plasterboard or 13 mm cement render on each face has an $R_w + C_{tr}$ of not less than 50 and an R_w of not less than 50, if constructed as shown in Figure S28C5c.

(6) A 100 mm thick concrete panel with—

(a) a row of 64 mm steel studs at 600 mm centres, spaced 25 mm from the concrete panel; and

(b) 80 mm thick polyester insulation or 50 mm thick glass wool insulation with a density of 11 kg/m^3, positioned between studs; and

(c) two layers of 13 mm plasterboard fixed to outside face of studs and one layer of 13 mm plasterboard fixed to outside face of concrete panel,

has an with an $R_w + C_{tr}$ of not less than 50 and an R_w of not less than 50, if constructed in accordance with Figure S28C5d.

(7) A 125 mm thick concrete panel with—

(a) a row of 64 mm steel studs at 600 mm centres, spaced 20 mm from the concrete panel; and

(b) 70 mm polyester insulation with a density of 9 kg/m^3, positioned between studs; and

(c) one layer of 13 mm plasterboard fixed to the outside face of the studs,

has an with an $R_w + C_{tr}$ of not less than 50 and an R_w of not less than 50, if constructed in accordance with Figure S28C5e.

(8) A 125 mm thick concrete panel has an R_w of not less than 50, if constructed as shown in Figure S28C5f.

(9) A 100 mm concrete panel with 13 mm cement render or one layer of 13 mm plasterboard on each face has an R_w of not less than 50, if constructed as shown in Figure S28C5g.

(10) A 190 mm thick concrete blockwork has an R_w of not less than 45, if constructed as shown in Figure S28C5h.

(11) 140 mm thick concrete blockwork, the face shell thickness of the blocks being not less than 44 mm and with—

(a) 50 mm x 50 mm timber battens spaced at not more than 610 mm centres screw-fixed on one face of the blocks into resilient plugs with rubber inserts between battens and the wall; and

(b) the face of the battens clad with 13 mm plasterboard,

has an R_w of not less than 45, if constructed as shown in Figure S28C5i.

(12) A concrete panel, 100 mm thick, has an R_w of not less than 45, if constructed as shown in Figure S28C5j.

Figure S28C5a: 150 mm thick concrete panel

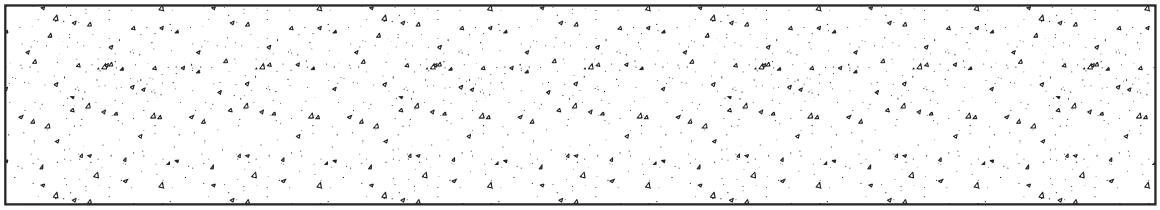

Figure S28C5b: 150 mm thick concrete panel with one layer of 10 mm plasterboard fixed to 28 mm metal furring channels on each face

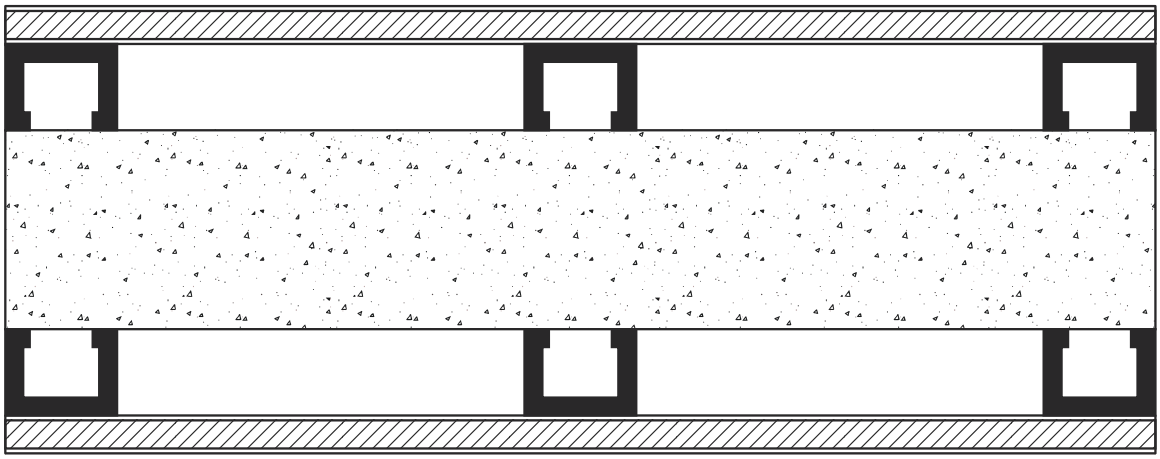

Figure S28C5c: 200 mm thick concrete panel with one layer of 13 mm plasterboard or 13 mm cement render on each face

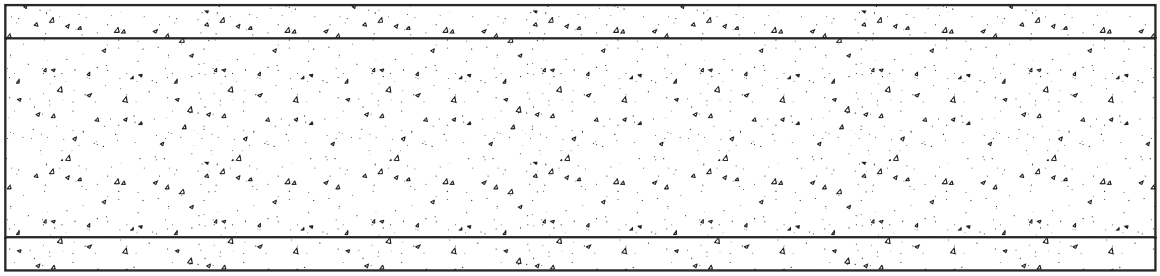

Figure S28C5d: 100 mm thick concrete panel with studs, insulation and plasterboard

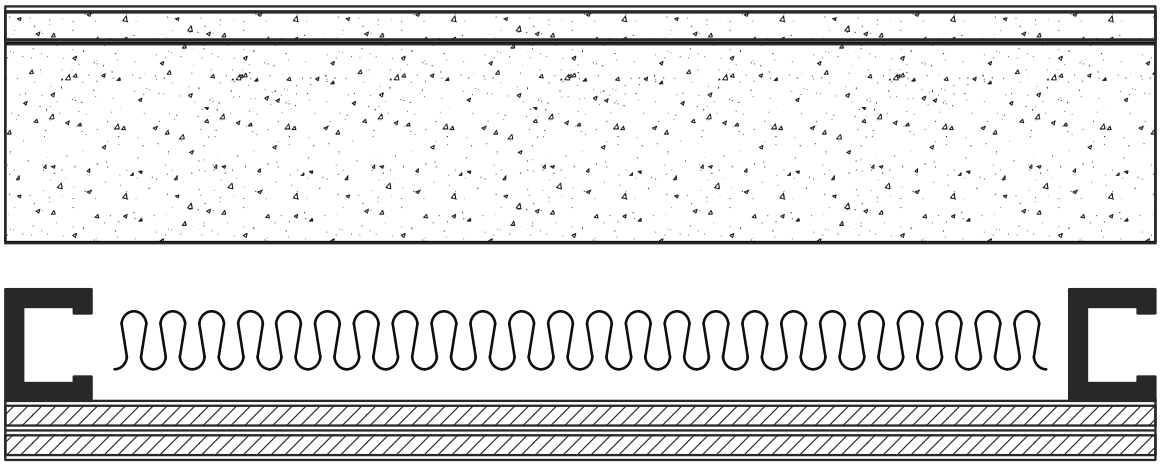

Figure S28C5e: 125 mm thick concrete panel with studs, insulation and plasterboard

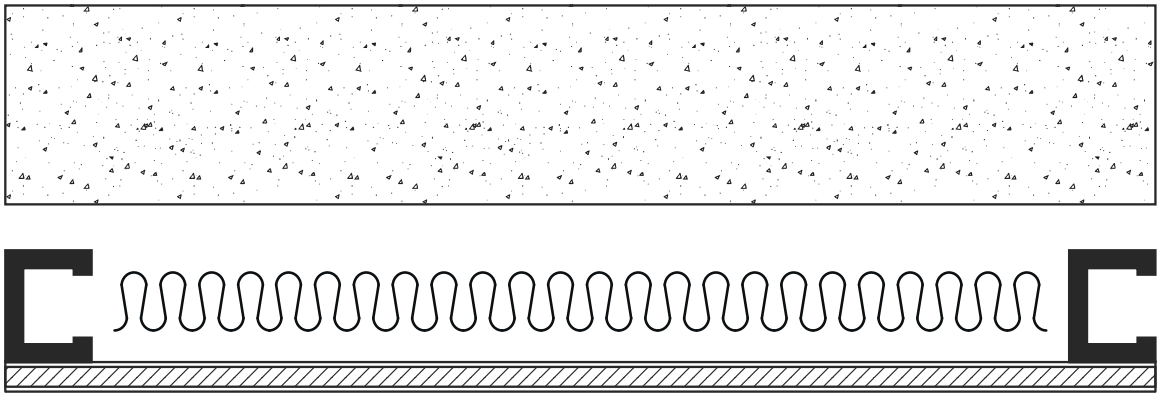

Figure S28C5f: 125 mm thick concrete panel

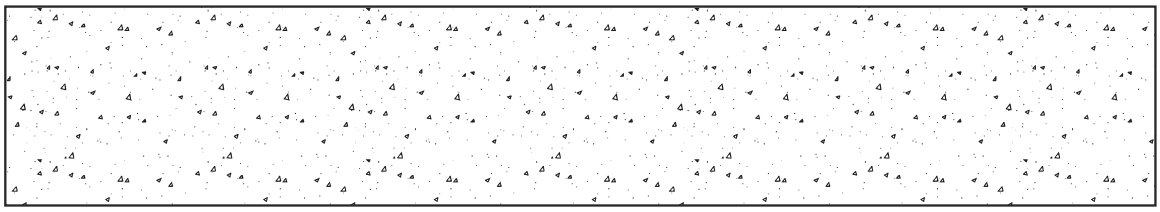

Figure S28C5g: 100 mm concrete panel with 13 mm cement render or one layer of 13 mm plasterboard on each face

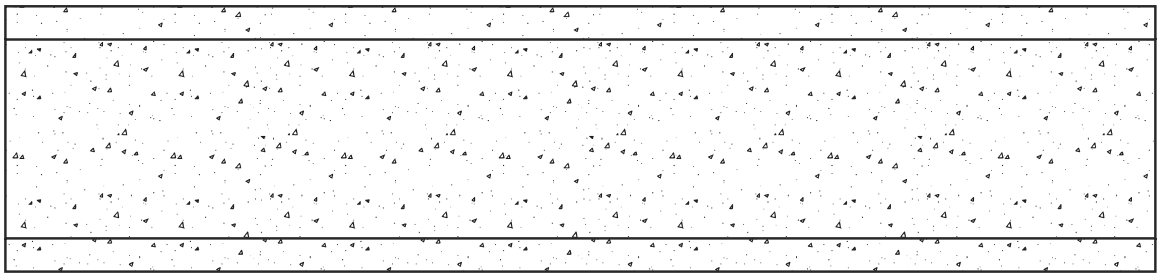

Figure S28C5h: 190 mm thick concrete blockwork

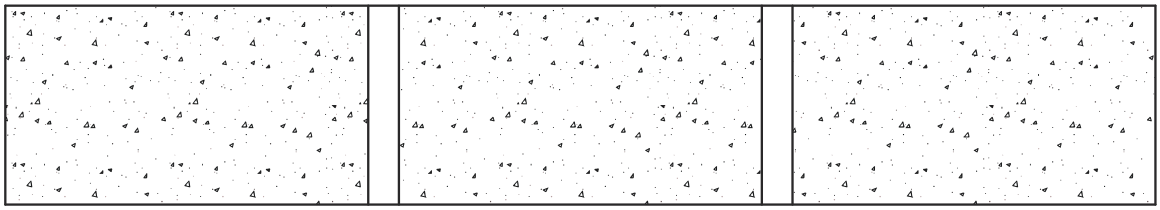

Figure S28C5i: 140 mm thick concrete blockwork with timber battens and 13 mm plasterboard

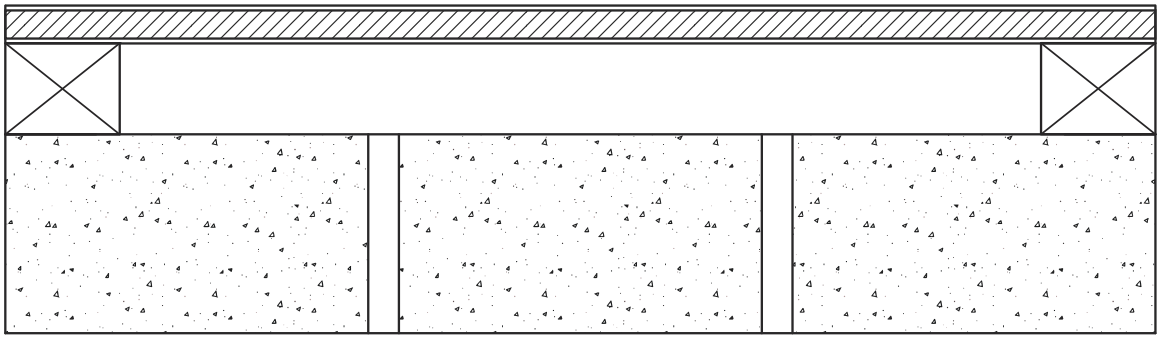

Figure S28C5j: 100 mm thick concrete panel

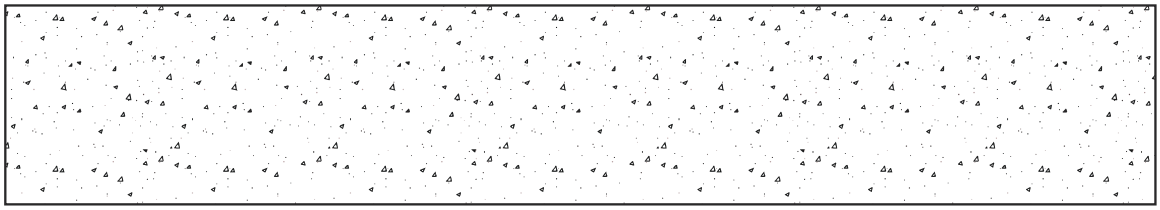

S28C6 Acceptable forms of construction for walls — autoclaved aerated concrete

[2019: Spec F5.2: Table 2]

(1) Acceptable forms of construction for autoclaved aerated concrete walls are set out in (2) to (5).

(2) A 75 mm thick autoclaved aerated concrete wall panel with—

(a) a row of 64 mm steel studs at 600 mm centres, spaced 20 mm from the autoclaved aerated concrete wall panel; and

(b) 75 mm thick glass wool insulation with a density of 11 kg/m^3 positioned between studs; and

(c) one layer of 10 mm moisture resistant plasterboard or 13 mm fire protective grade plasterboard fixed to outside face of studs and outside face of autoclaved aerated concrete wall panel,

has an $R_w + C_{tr}$ of not less than 50 and an R_w of not less than 50, if constructed as shown in Figure S28C6a.

(3) A 75 mm thick autoclaved aerated concrete wall panel with—

(a) a row of 64 mm steel studs at 600 mm centres, spaced 35 mm from the autoclaved aerated concrete panel wall; and

(b) 28 mm metal furring channels fixed to the outside face of the autoclaved aerated concrete wall panel, with 50 mm thick polyester insulation with a density of 9 kg/m^3 positioned between furring channels and one layer of 13 mm fire protective grade plasterboard fixed to furring channels; and

(c) 105 mm thick glass wool insulation with a density of 7 kg/m^3 positioned between studs; and

(d) one layer of 13 mm fire protective grade plasterboard fixed to the outside face of the studs,

has an $R_w + C_{tr}$ of not less than 50 and an R_w of not less than 50, if constructed as shown in Figure S28C6b.

(4) Two leaves of 75 mm autoclaved aerated concrete wall panel with—

(a) a cavity not less than 30 mm between panels containing 50 mm glass wool insulation with a density of 11 kg/m^3; and

(b) one layer of 10 mm plasterboard fixed to outside face of each panel,

has an $R_w + C_{tr}$ of not less than 50 and an R_w of not less than 50, if constructed as shown in Figure S28C6c.

(5) A 75 mm thick autoclaved aerated concrete wall panel with—

(a) one layer of 10 mm moisture resistant plasterboard on one face; and

(b) 28 mm metal furring channels and resilient mounts, 75 mm polyester insulation with a density of 9 kg/m^3 and 13 mm fire-protective grade plasterboard fixed to the other face,

has an R_w of not less than 50, if constructed as shown in Figure S28C6d.

Figure S28C6a: 75 mm thick autoclaved aerated concrete wall panel (method 1)

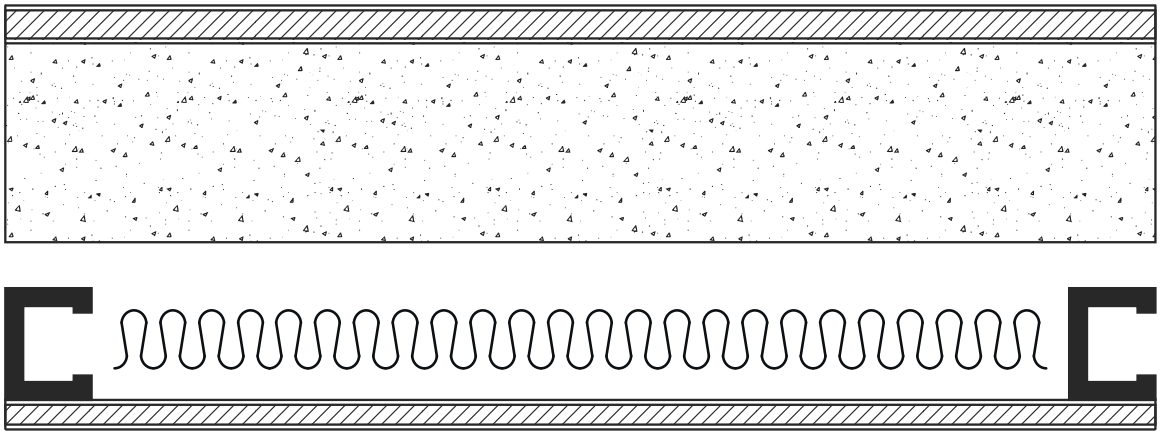

Figure S28C6b: 75 mm thick autoclaved aerated concrete wall panel (method 2)

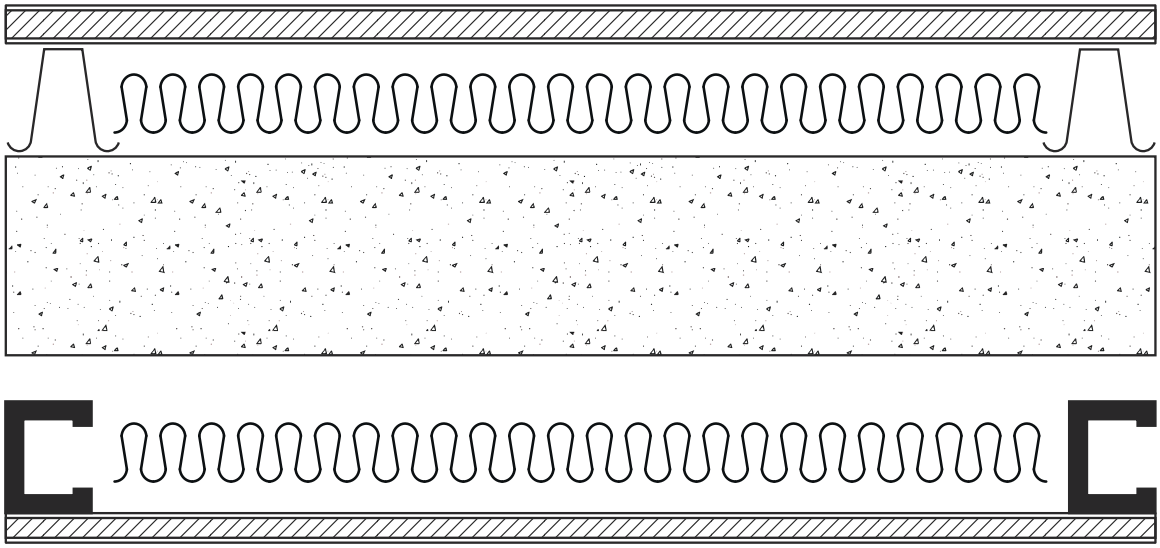

Figure S28C6c: Two leaves of 75 mm autoclaved aerated concrete wall panel

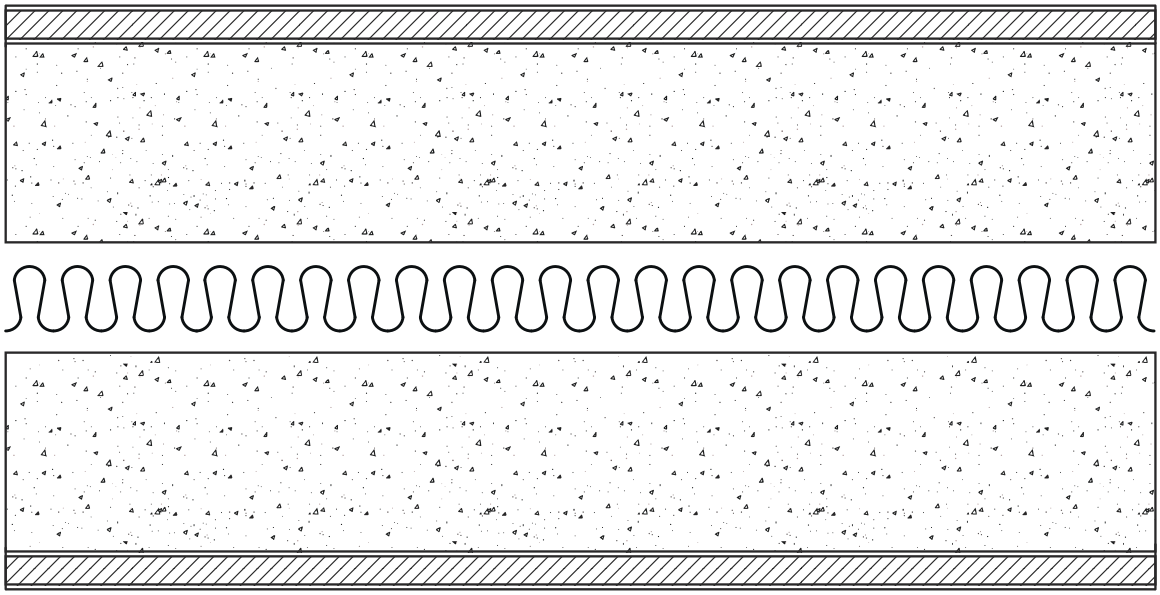

Figure S28C6d: 75 mm thick autoclaved aerated concrete wall panel (method 3)

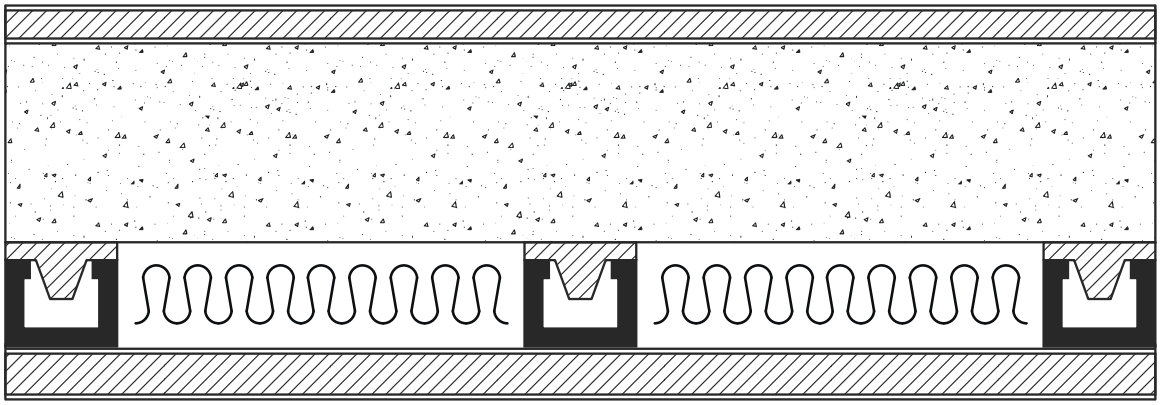

S28C7 Acceptable forms of construction for walls — timber and steel framing

[2019: Spec F5.2: Table 2]

(1) Acceptable forms of construction for timber and steel framing walls are set out in (2) to (11).

(2) Two rows of 70 x 35 mm timber studs at 450 mm centres with—

(a) an air gap not less than 20 mm between the rows of studs; and

(b) 75 mm thick glass or mineral wool insulation with a density of 8 kg/m³ or 60 mm thick polyester insulation with a density of 11 kg/m³ positioned between one row of studs; and

(c) two layers of 13 mm fire-protective grade plasterboard or one layer of 6 mm fibre-cement sheet and one layer of 13 mm fire-protective grade plasterboard, fixed to outside face of studs,

has an $R_w + C_{tr}$ of not less than 50 and an R_w of not less than 50, if constructed as shown in Figure S28C7a.

(3) One row of 70 mm x 35 mm staggered timber studs, without noggings between adjacent studs, at not less than 450 mm centres, fixed to 90 mm x 35 mm wall plates with—

(a) 75 mm thick glass or mineral wool insulation with a minimum density of 8 kg/m³ positioned between studs; and

(b) two layers of 13 mm fire-protective grade plasterboard fixed to outside face of studs,

has an R_w of not less than 50, if constructed as shown in Figure S28C7b.

(4) One row of 70 mm x 35 mm timber studs at not less than 600 mm centres with—

(a) 75 mm thick glass or mineral wool insulation with a minimum density of 8 kg/m³ positioned between studs; and

(b) two layers of 13 mm fire-protective grade plasterboard fixed to outside face of studs,

has an R_w of not less than 45, if constructed as shown in Figure S28C7c.

(5) One row of 70 mm x 35 mm timber studs at not less than 450 mm centres with—

(a) 28 mm furring channels installed horizontally on one side; and

(b) two layers of 13 mm fire-protective plasterboard fixed on each face,

has an R_w of not less than 45, if constructed as shown in Figure S28C7d.

(6) Two rows of 64 mm steel studs at 600 mm centres with—

(a) an air gap not less than 20 mm between the rows of studs; and

(b) 50 mm thick glass wool insulation or 60 mm thick polyester insulation with a density of 11 kg/m³ positioned between one row of studs; and

(c) two layers of 13 mm fire-protective grade plasterboard or one layer of 6 mm fibre-cement sheet and one layer of 13 mm fire-protective grade plasterboard, fixed to outside face of studs,

has an $R_w + C_{tr}$ of not less than 50 and an R_w of not less than 50, if constructed as shown in Figure S28C7e.

(7) Two rows of 64 mm steel studs at 600 mm centres with—

(a) an air gap not less than 80 mm between the rows of studs; and

(b) 200 mm thick polyester insulation with a density of 14 kg/m^3 positioned between studs; and

(c) one layer of 13 mm fire-protective grade plasterboard and one layer 13 mm plasterboard on one outside face and one layer of 13 mm fire-protective grade plasterboard on the other outside face,

has an $R_w + C_{tr}$ of not less than 50 and an R_w of not less than 50, if constructed as shown in Figure S28C7f.

(8) One row of 92 mm steel studs at 600 mm centres with—

(a) 50 mm thick glass wool insulation with a density of 11 kg/m^3 or 60 mm thick polyester insulation with a density of 8 kg/m^3, positioned between studs; and

(b) two layers of 13 mm fire-protective grade plasterboard or one layer of 6 mm fibre-cement sheet and one layer of 13 mm fire-protective grade plasterboard, fixed to each face,

has an R_w of not less than 50, if constructed as shown in Figure S28C7g.

(9) One row of 64 mm steel studs with 2 layers of 16 mm fire-protective grade plasterboard fixed to each face has an R_w of not less than 45, if constructed as shown in Figure S28C7h.

(10) One row of 64 mm steel studs with—

(a) one layer of 16 mm fire-protective grade plasterboard fixed to one face; and

(b) 50 mm thick glass or mineral wool insulation with a density of 11 kg/m^3 positioned between the studs; and

(c) two layers of fire-protective grade plasterboard fixed to the other face, the inner layer being 16 mm thick and the outer layer being 13 mm,

has an R_w of not less than 45, if constructed as shown in Figure S28C7i.

(11) One row of 64 mm steel studs with two layers of 13 mm plasterboard on each face has an R_w of not less than 45, if constructed as shown in Figure S28C7j.

Figure S28C7a: Two rows of 70 mm x 35 mm timber studs

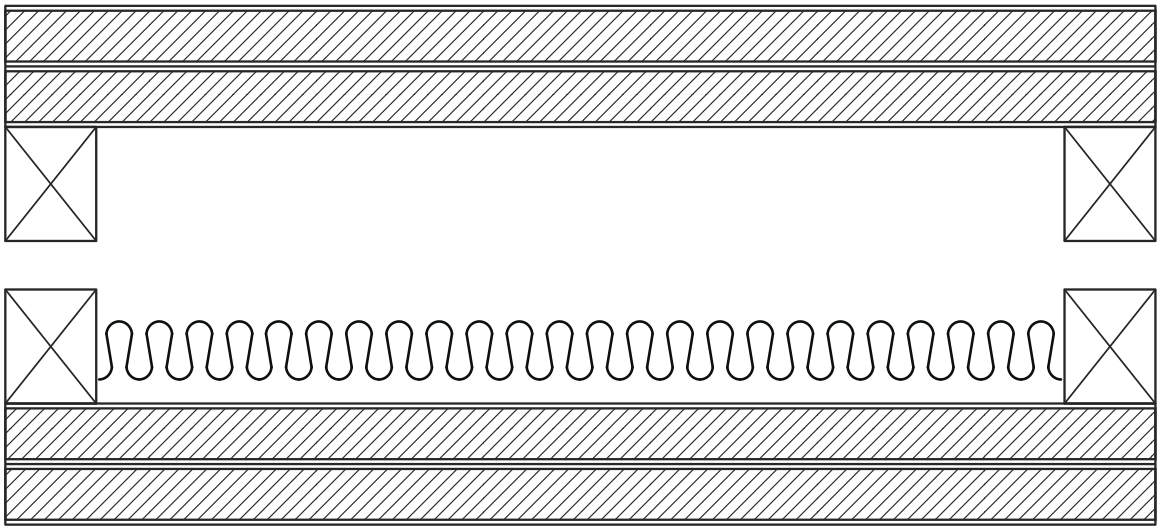

Figure S28C7b: One row of 70 mm x 35 mm staggered timber studs without noggings between adjacent studs

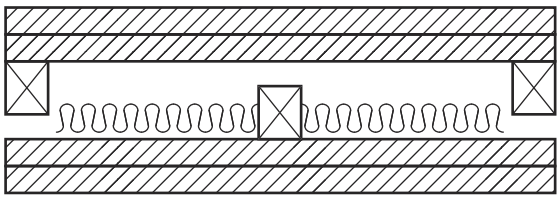

Figure S28C7c: One row of 70 mm x 35 mm timber studs at not less than 600 mm centres

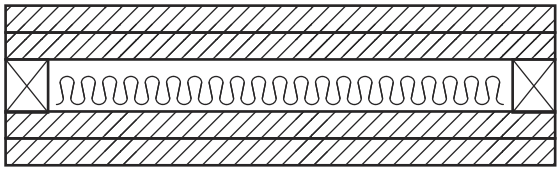

Figure S28C7d: One row of 70 mm x 35 mm timber studs at not less than 450 mm centres

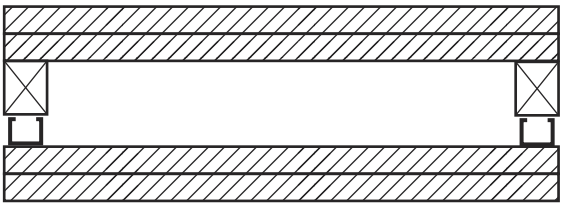

Figure S28C7e: Two rows of 64 mm steel studs at 600 mm centres (Method 1)

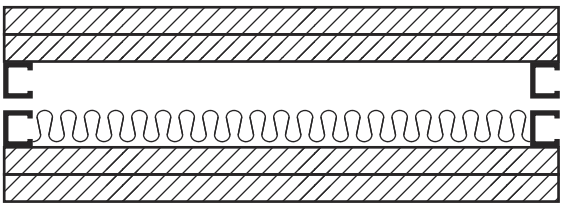

Figure S28C7f: Two rows of 64 mm steel studs at 600 mm centres (Method 2)

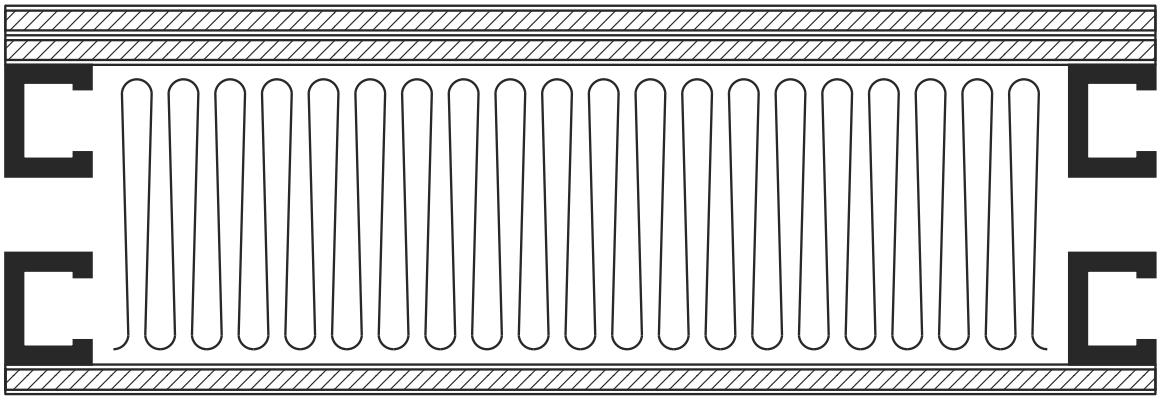

Figure S28C7g: One row of 92 mm steel studs

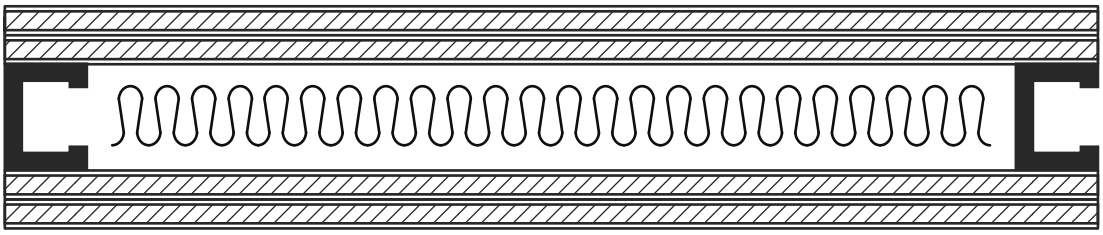

Figure S28C7h: One row of 64 mm steel studs with 2 layers of 16 mm fire-protective grade plasterboard

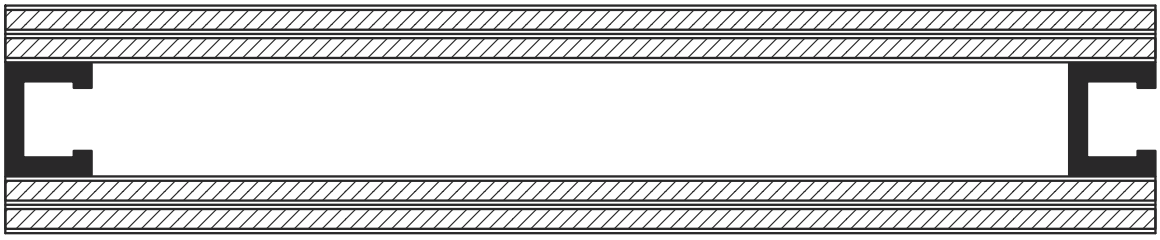

Figure S28C7i: One row of 64 mm steel studs

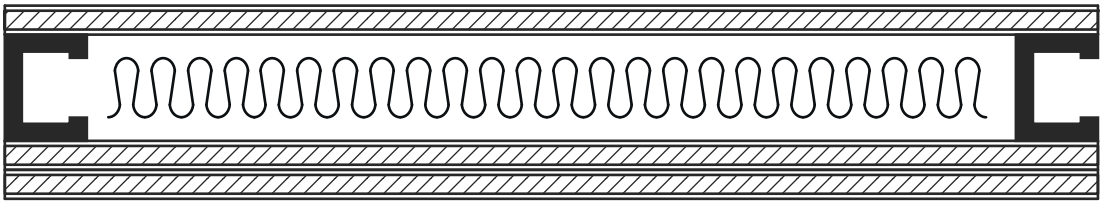

Figure S28C7j: One row of 64 mm steel studs with two layers of 13 mm plasterboard on each face

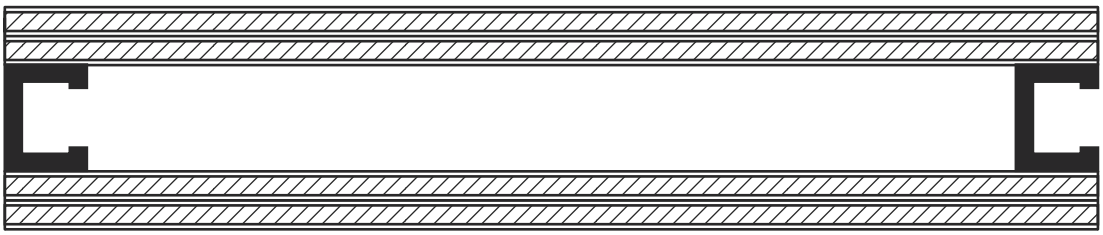

S28C8 Acceptable forms of construction for floors — concrete

[2019: Spec F5.2: Table 3]

(1) Acceptable forms of construction for concrete floors are set out in (2) to (4).

(2) 150 mm thick concrete slab with—

(a) 28 mm metal furring channels and isolation mounts fixed to underside of slab, at 600 mm centres; and

(b) 65 mm thick polyester insulation with a density of 8 kg/m^3, positioned between furring channels; and

(c) one layer of 13 mm plasterboard fixed to furring channels,

has an $R_w + C_{tr}$ of not less than 50, an $L_{n,w}$ of not more than 62 and an R_w of not less than 50, if constructed as shown in Figure S28C8a.

(3) 200 mm thick concrete slab with carpet on underlay has an $R_w + C_{tr}$ of not less than 50, an $L_{n,w}$ of not more than 62 and an R_w of not less than 50, if constructed as shown in Figure S28C8b.

(4) 100 mm thick concrete slab has an $R_w + C_{tr}$ of not less than 45 and an R_w of not less than 45, if constructed as shown in Figure S28C8c.

Figure S28C8a: 150 mm thick concrete slab

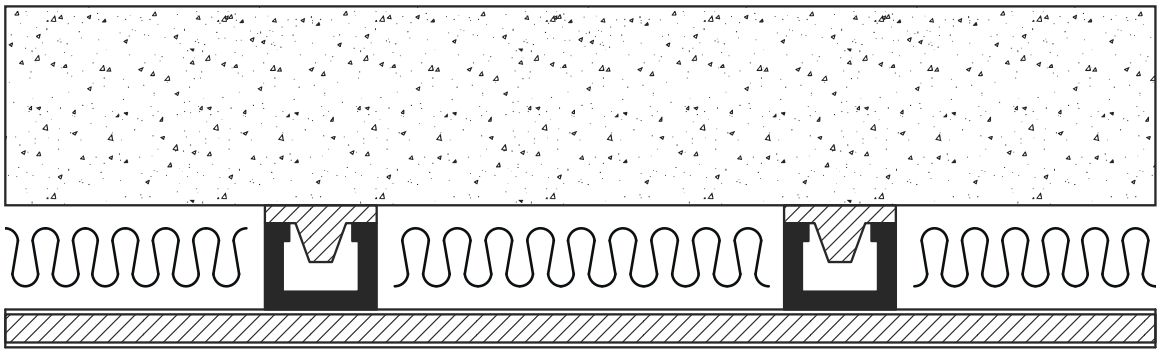

Figure S28C8b: 200 mm thick concrete slab with carpet on underlay

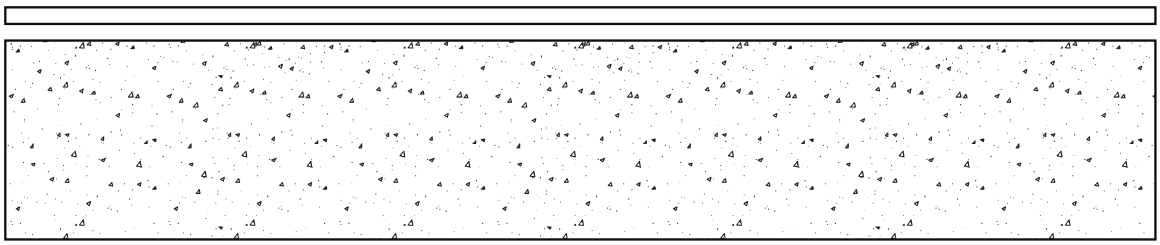

Figure S28C8c: 100 mm thick concrete slab

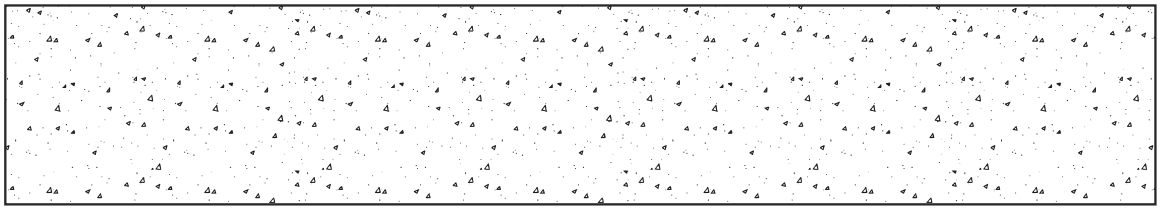

S28C9 Acceptable forms of construction for floors — autoclaved aerated concrete

[2019: Spec F5.2: Table 3]

(1) An acceptable form of construction for autoclaved aerated concrete floors is set out in (2).

(2) 75 mm thick autoclaved aerated concrete floor panel with—

(a) 8 mm ceramic tiles with flexible adhesive and *waterproof membrane*, located above the slab; and

(b) timber joists at 600 mm centres; and

(c) R1.5 glass wool insulation positioned between timber joists; and

(d) 28 mm metal furring channels and resilient mounts fixed to underside of joists; and

(e) two layers of 13 mm plasterboard fixed to furring channels,

has an $R_w + C_{tr}$ of not less than 50, an $L_{n,w}$ of not more than 62 and an R_w of not less than 50, if constructed as shown in Figure S28C9.

Figure S28C9: 75 mm thick autoclaved aerated concrete floor panel

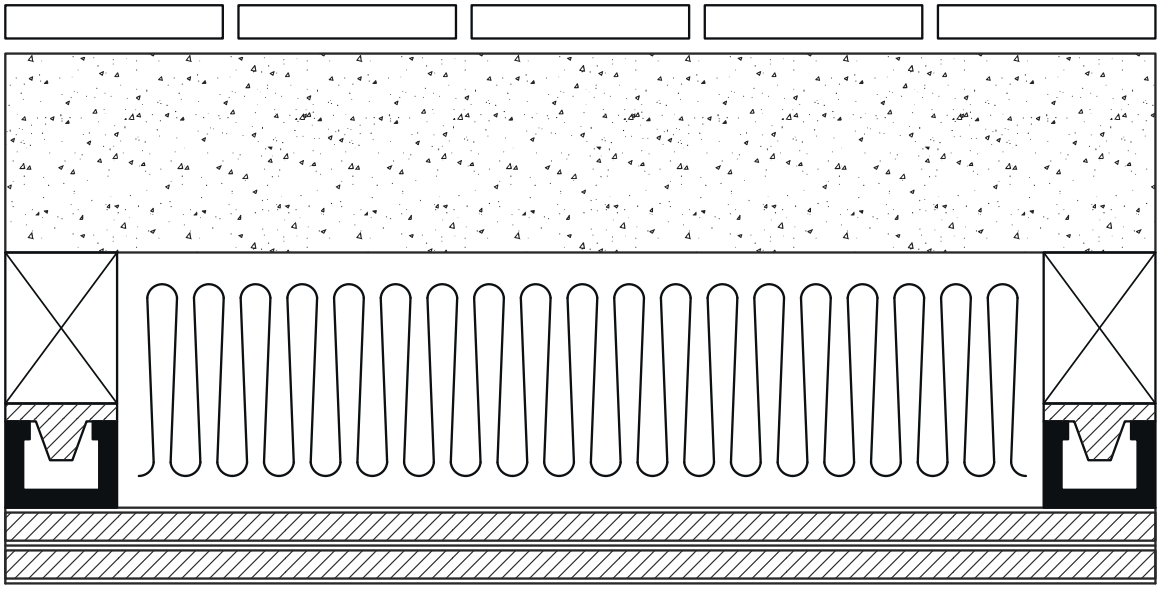

S28C10 Acceptable forms of construction for floors — timber

[2019: Spec F5.2: Table 3]

(1) Acceptable forms of construction for timber floors are set out in (2) and (3).

(2) 19 mm thick particleboard floor sheeting with—

(a) 190 mm x 45 mm timber joists at 450 mm centres; and

(b) R2.5 glass or mineral wool insulation positioned between timber joists; and

(c) 28 mm metal furring channels and isolation mounts fixed to underside of joists, isolation mounts to be of natural rubber with a dynamic factor of not more than 1.1 and static deflection of not less than 3 mm at actual operating load; and

(d) two layers of 16 mm fire-protective grade plasterboard fixed to furring channels,

has an $R_w + C_{tr}$ of not less than 50, an $L_{n,w}$ of not more than 62 and an R_w of not less than 50, if constructed as shown in Figure S28C10a.

(3) Timber flooring with minimum 8.5 kg/m² mass, over 19 mm thick particleboard floor sheeting with—

(a) 190 mm x 45 mm timber joists at not less than 450 mm centres; and

(b) R2.5 glass or mineral wool insulation positioned between timber joists; and

(c) 28 mm metal furring channels fixed to underside of joists at 600 mm centres by clip or mount; and

(d) one layer of 13 mm acoustic grade plasterboard fixed to furring channels,

has an $R_w + C$ of not less than 45 and an R_w of not less than 45, if constructed as shown in Figure S28C10b.

Figure S28C10a: 19 mm thick particleboard floor sheeting

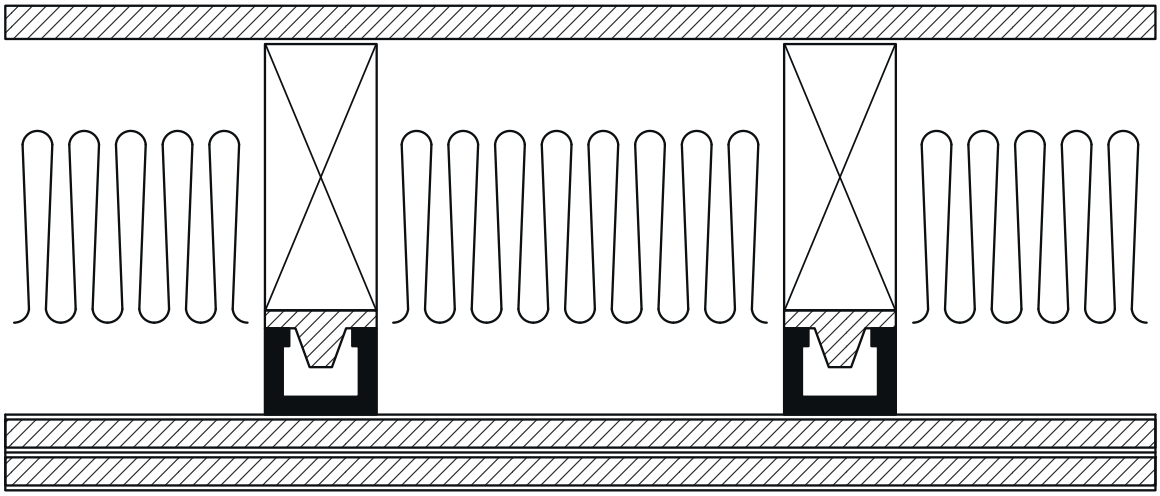

Figure S28C10b: Timber flooring with minimum 8.5kg/m² mass, over 19 mm thick particleboard floor sheeting

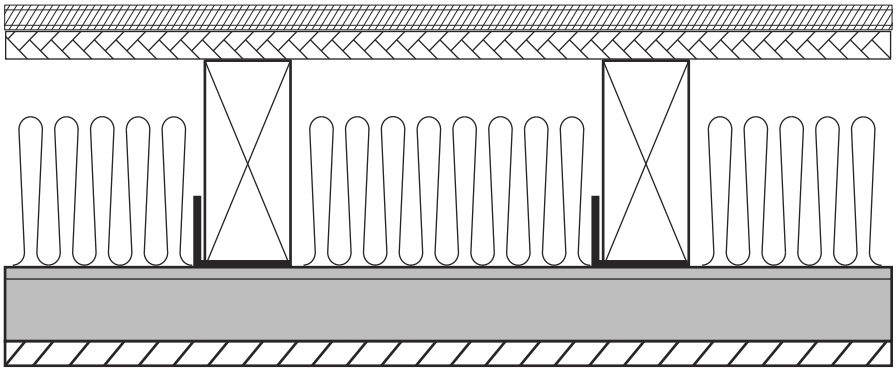

Specification 29 Impact sound – test of equivalence

NT S29C1

S29C1 Scope

[2019: Spec F5.5: 1]

This Specification describes a method of test to determine the comparative resistance of walls to the transmission of impact sound.

NT S29C2

S29C2 Construction to be tested

[2019: Spec F5.5: 2]

(1) The test is conducted on a specimen of prototype wall construction and on a specimen of one or other of the constructions specified in S28C4 to S28C7.

(2) The testing of a construction specified in S28C4 to S28C7 need not be repeated for subsequent comparisons provided complete records of the results, the test equipment and the technique of testing are kept so that identical equipment can be employed and an identical technique can be adopted in the testing of specimens of prototype wall construction.

NT S29C3

S29C3 Method

[2019: Spec F5.5: 3]

(1) The wall constructions to be compared must be tested in accordance with AS 1191.

(2) A horizontal steel platform 510 mm x 460 mm x 10 mm thick must be placed with one long edge in continuous and direct contact with the wall to be tested on the side of the wall on which the impact sound is to be generated.

(3) A tapping machine complying with ISO 140/6 — 1998 (E) must be mounted centrally on the steel platform.

(4) The sound transmission through the wall must be determined in accordance with AS 1191 except that the tapping machine as mounted on the steel platform must be used as the source of sound.

(5) The impact sound pressure levels measured in the receiving room must be converted into normalised levels using a reference equivalent absorption area of 10 m^2.

Section G Ancillary provisions

Part G1 Minor structures and components

Objectives

G1O1 Objective

Functional Statements

G1F1 Swimming pool drainage

G1F2 Swimming pools — access by young children and safety of recirculation systems

G1F3 Accidental locking in small spaces

G1F4 Early childhood centres

Performance Requirements

G1P1 Swimming pool drainage

G1P2 Swimming pool access and water recirculation systems

G1P3 Cool rooms

G1P4 Vaults

G1P5 Outdoor play spaces in early childhood centres

Deemed-to-Satisfy Provisions

G1D1 Deemed-to-Satisfy Provisions

G1D2 Swimming pools

G1D3 Refrigerated chambers, strong-rooms and vaults

G1D4 Outdoor play spaces

Part G2 Boilers, pressure vessels, heating appliances, fireplaces, chimneys and flues

Objectives

G2O1 Objective

Functional Statements

G2F1 Combustion appliances

G2F2 Boilers and pressure vessels

Performance Requirements

G2P1 Combustion heating appliances

G2P2 Boilers and pressure vessels

Verification Methods

G2V1 Combustion appliances

Deemed-to-Satisfy Provisions

G2D1 Deemed-to-Satisfy Provisions

G2D2 Installation of appliances

G2D3 Open fireplaces

G2D4 Incinerator rooms

Part G3 Atrium construction

Deemed-to-Satisfy Provisions

G3D1 Application of Part

G3D2 Dimensions of atrium well

G3D3 Separation of atrium by bounding walls

G3D4	Construction of bounding walls
G3D5	Construction at balconies
G3D6	Separation at roof
G3D7	Means of egress
G3D8	Fire and smoke control systems

Part G4 Construction in alpine areas

Objectives

G4O1	Objective

Functional Statements

G4F1	Construction in alpine areas

Performance Requirements

G4P1	External doorways
G4P2	Structures forming pathways in snow conditions
G4P3	Control of falling ice and snow
G4P4	Fire safety systems in alpine areas

Deemed-to-Satisfy Provisions

G4D1	Deemed-to-Satisfy Provisions
G4D2	Application of Part
G4D3	External doors
G4D4	Emergency lighting
G4D5	External trafficable structures
G4D6	Clear space around buildings
G4D7	Fire-fighting services and equipment
G4D8	Fire orders

Part G5 Construction in bushfire prone areas

Objectives

G5O1	Objective

Functional Statements

G5F1	Construction in bushfire prone areas

Performance Requirements

G5P1	Bushfire resistance
G5P2	Additional bushfire requirements for certain Class 9 buildings

Verification Methods

G5V1	Buildings in bushfire prone areas

Deemed-to-Satisfy Provisions

G5D1	Deemed-to-Satisfy Provisions
G5D2	Application of Part
G5D3	Protection — residential buildings
G5D4	Protection — certain Class 9 buildings

Part G6 Occupiable outdoor areas

Deemed-to-Satisfy Provisions

G6D1	Application of Part
G6D2	Fire hazard properties
G6D3	Fire separation
G6D4	Provision for escape

	G6D5	Construction of exits
	G6D6	Fire fighting equipment
	G6D7	Lift installations
	G6D8	Visibility in an emergency, exit signs and warning systems
	G6D9	Light and ventilation
	G6D10	Fire orders
Part G7	**Livable housing design**	
	Objectives	
	G7O1	Objective
	Functional Statements	
	G7F1	Livable housing design
	Performance Requirements	
	G7P1	Livable housing design
	Deemed-to-Satisfy Provisions	
	G7D1	Deemed-to-Satisfy Provisions
	G7D2	Livable housing design
Specification 30	**Installation of boilers and pressure vessels**	
	S30C1	Scope
	S30C2	Explosion relief
	S30C3	Floors and drainage
	S30C4	Protection from heat
Specification 31	**Fire and smoke control systems in buildings containing atriums**	
	S31C1	Scope
	S31C2	General requirement — automatic fire sprinkler system
	S31C3	Roof protection
	S31C4	Atrium floor protection
	S31C5	Sprinkler systems to glazed walls
	S31C6	Stop valves
	S31C7	General requirements — smoke control system
	S31C8	Operation of atrium mechanical air-handling systems
	S31C9	Activation of smoke control system
	S31C10	Smoke exhaust system
	S31C11	Upward air velocity
	S31C12	Exhaust fans
	S31C13	Smoke-and-heat vents
	S31C14	Make-up air supply
	S31C15	General requirements—fire detection and alarm system
	S31C16	Smoke detection system
	S31C17	Smoke detection in spaces separated from the atrium by bounding walls
	S31C18	Alarm systems
	S31C19	Emergency warning and intercom systems
	S31C20	Standby power system
	S31C21	System for excluding smoke from fire-isolated exits
Specification 43	**Bushfire protection for certain Class 9 buildings**	

S43C1	Scope
S43C2	Separation from classified vegetation
S43C3	Separation between buildings
S43C4	Separation from allotment boundaries and carparking areas
S43C5	Separation from hazards
S43C6	Non-combustible path around building
S43C7	Access pathways
S43C8	Exposed external areas
S43C9	Internal tenability
S43C10	Building envelope
S43C11	Supply of water for fire-fighting purposes
S43C12	Emergency power supply
S43C13	Signage
S43C14	Vehicular access

Part G1 Minor structures and components

Introduction to this Part

This Part is intended to reduce the likelihood of illness or injury due to the design or construction of certain minor structures and components including *swimming pool* fencing, drainage and recirculation systems, cool rooms and vaults, and outdoor play spaces in *early childhood centres*.

Objectives

G1O1 Objective

[2019: GO1]

The Objective of this Part is to—

(a) safeguard people from illness caused by the discharge of *swimming pool* waste water; and

(b) protect *other property* from damage caused by the discharge of *swimming pool* waste water; and

(c) safeguard young children from drowning or injury in a *swimming pool*; and

(d) safeguard people from drowning or injury due to suction by a *swimming pool* water recirculation system; and

(e) safeguard occupants from illness or injury resulting from being accidentally locked inside spaces which are designed to be entered for short periods of time only and in which occupation for longer periods may be hazardous; and

(f) safeguard young children in outdoor play spaces.

Applications

(1) G1O1(d) only applies to a *swimming pool* with a depth of water more than 300 mm.

(2) G1O1(f) only applies to a Class 9b *early childhood centre*.

Functional Statements

G1F1 Swimming pool drainage

[2019: GF1.1]

Adequate means for the disposal of *swimming pool* water and drainage is to be provided to a *swimming pool*.

G1F2 Swimming pools — access by young children and safety of recirculation systems

[2019: GF1.2]

A *swimming pool* is to be provided with—

(a) means of restricting access by young children to it; and

(b) means to reduce the possibility of a person being entrapped or injured due to suction by a water recirculation system.

Applications

G1F2(b) only applies to a *swimming pool* with a depth of water more than 300 mm.

G1F3 Accidental locking in small spaces

[2019: GF1.3]

Any refrigerated or cooling chamber, strong-room and vault or the like that is capable of accommodating a person is to have safety measures to facilitate escape and for alerting people outside such a space in the event of an emergency.

G1F4 Early childhood centres

[2019: GF1.4]

An outdoor play space is to be provided with a means of restricting the passage of children to outside of the play space.

Applications

G1F4 only applies to a Class 9b *early childhood centre*.

Performance Requirements

NT G1P1

G1P1 Swimming pool drainage

[2019: GP1.1]

A *swimming pool* must have adequate means of draining the pool in a manner which will not—

(a) cause illness to people; or

(b) affect *other property*.

NSW G1P2
NT G1P2
QLD G1P2
SA G1P2
TAS G1P2
VIC G1P2

G1P2 Swimming pool access and water recirculation systems

[2019: GP1.2]

(1) A barrier must be provided to a *swimming pool* and must—

(a) be continuous for the full extent of the hazard; and

(b) be of a strength and rigidity to withstand the foreseeable impact of people; and

(c) restrict the access of young children to the pool and the immediate pool surrounds; and

(d) have any gates and doors fitted with latching devices not readily operated by young children, and constructed to automatically close and latch.

(2) A *swimming pool* water recirculation system must incorporate safety measures to avoid entrapment of, or injury to, a person.

Applications

G1P2(2) only applies to a *swimming pool* with a depth of water more than 300 mm.

G1P3 Cool rooms

[2019: GP1.3]

Any refrigerated or cooling chamber, or the like which is of sufficient size for a person to enter must—

(a) have adequate means of communicating with or alerting other occupants in the building in the case of an emergency; and

(b) have a door which is—

(i) of adequate dimensions to allow occupants to readily escape; and

(ii) openable from inside without a key at all times.

G1P4 Vaults

[2019: GP1.4]

Any strong-room, vault or the like which is of sufficient size for a person to enter must—

(a) have adequate means of communicating with or alerting other occupants in the building in the case of an emergency; and

(b) have internal lighting controllable only from within the room; and

(c) have an external indicator that the room is occupied.

G1P5 Outdoor play spaces in early childhood centres

[2019: GP1.5]

Fencing or other barriers must be provided around any outdoor play space, in which the design and height of the fencing or other barriers, including the—

(a) design of gates and fittings; and

(b) proximity of the barriers to any permanent structure on the property,

must ensure that children cannot go through, over or under the fencing or other barriers.

Applications

G1P5 only applies to a Class 9b *early childhood centre*.

TAS G1P6

Deemed-to-Satisfy Provisions

G1D1 Deemed-to-Satisfy Provisions

[2019: G1.0]

(1) *Performance Requirement* G1P1 must be complied with.

TAS G1D1(2)

(2) Where a *Deemed-to-Satisfy Solution* is proposed, *Performance Requirements* G1P2 to G1P5 are satisfied by complying with G1D2 to G1D4.

(3) Where a *Performance Solution* is proposed, the relevant *Performance Requirements* must be determined in

accordance with A2G2(3) and A2G4(3) as applicable.

Explanatory Information

There are no *Deemed-to-Satisfy Provisions* for G1P1.

NSW G1D2

NT G1D2

QLD G1D2

SA G1D2

TAS G1D2

VIC G1D2

G1D2 Swimming pools

[2019: G1.1]

(1) A *swimming pool* with a depth of water more than 300 mm and which is associated with a Class 2 or 3 building or Class 4 part of a building, must have suitable barriers to restrict access by young children to the immediate pool surrounds in accordance with AS 1926.1 and AS 1926.2.

(2) A water recirculation system in a *swimming pool* with a depth of water more than 300 mm must comply with AS 1926.3.

Explanatory Information: Cross-volume considerations

Part C2 of NCC Volume Three sets out the requirements for pumped discharge from *swimming pools*.

G1D3 Refrigerated chambers, strong-rooms and vaults

[2019: G1.2]

(1) A refrigerated or cooling chamber, strongroom or vault that is of sufficient size for a person to enter must have—

(a) a door which is capable of being opened by hand from inside without a key; and

(b) internal lighting controlled only by a switch which is located adjacent to the entrance doorway inside the chamber, strongroom or vault; and

(c) an indicator lamp positioned outside the chamber, strongroom or vault which is illuminated when the interior lights *required* by (b) are switched on; and

(d) an alarm that is—

(i) located outside but controllable only from within the chamber, strongroom or vault; and

(ii) able to achieve a sound pressure level outside the chamber, strongroom or vault of 90 dB(A) when measured 3 m from the sounding device.

(2) A door *required* by (1)(a) in a refrigerated or cooling chamber must have a doorway with a clear width of not less than 600 mm and a clear height not less than 1.5 m.

G1D4 Outdoor play spaces

[2019: G1.3]

(1) Any outdoor play space in a Class 9b *early childhood centre* must be enclosed on all sides with a barrier which—

(a) where the edge of the trafficable surface of the outdoor play space is at the same level or less than 2 m above the surface beneath — complies with AS 1926.1; and

(b) where the edge of the trafficable surface of the outdoor play space is 2 m or more above the surface beneath—

(i) is not less than 1.8 m high, as measured from above the trafficable surface; and

(ii) is non-climbable and does not contain horizontal or other elements that could facilitate climbing; and

(iii) does not have any openings or apertures through which a 100 mm or greater sphere could pass; and

(iv) is not within 1.8 m, as measured directly from the top of the barrier, of any elements within the outdoor play space that facilitate climbing; and

(v) is not within 900 mm of elements in a wall that facilitate climbing; and

(c) has strength and rigidity complying with AS 1926.1.

(2) For the purposes of (1)(a), AS 1926.1 is applied as if there is a *swimming pool* located outside the outdoor play space, so that the barrier restricts children from exiting the premises without the knowledge of staff in the centre.

(3) The requirements of (1) do not apply to a wall, including doors and *windows*, which form part of the Class 9b *early childhood centre*, except where the wall is within a non-climbable zone for a barrier provided under (1)(a).

NSW G1D5

Part G2 Boilers, pressure vessels, heating appliances, fireplaces, chimneys and flues

Introduction to this Part

This Part is intended to reduce the risk to building occupants from the operation, malfunction or failure of *boilers*, *pressure vessels* and combustion appliances including components such as fireplaces, chimneys, flues, chutes, hoppers and the like.

Explanatory Information

Part G2 does not contain requirements for gas heaters, gas appliances and associated flues.

Objectives

G2O1 Objective

[2019: GO2]

The Objective of this Part is to—

(a) safeguard occupants from illness or injury caused by—

(i) fire from combustion appliances installed within a building; and

(ii) malfunction of a *boiler* or *pressure vessel* installed within a building; and

(b) protect a building from damage caused by the malfunction of a *boiler* or *pressure vessel* installed within.

Functional Statements

G2F1 Combustion appliances

[2019: GF2.1]

Combustion appliances using controlled combustion located in a building are to be installed in a way which reduces the likelihood of fire spreading beyond the appliance.

G2F2 Boilers and pressure vessels

[2019: GF2.2]

Boilers and *pressure vessels* located in a building are to be installed in a manner which will provide adequate safety for occupants.

Performance Requirements

G2P1 Combustion heating appliances

[2019: GP2.1]

Where provided in a building, a combustion appliance and its associated components, including an open fire-place, chimney, flue, chute, hopper or the like, must be installed—

(a) to withstand the temperatures likely to be generated by the appliance; and

(b) so that it does not raise the temperature of any building element to a level that would adversely affect the element's physical or mechanical properties or function; and

(c) so that hot products of combustion will not—

(i) escape through the walls of the associated components; and

(ii) discharge in a position that will cause fire to spread to nearby *combustible* materials or allow smoke to penetrate through nearby *windows*, ventilation inlets, or the like.

G2P2 Boilers and pressure vessels

[2019: GP2.2]

When located in a building, *boilers* and *pressure vessels* must be installed to avoid, during reasonably foreseeable conditions, the likelihood of—

(a) leakage from the vessel which could cause damage to the building; and

(b) rupture or other mechanical damage of the vessel which could cause damage to the building or injury to occupants.

Verification Methods

G2V1 Combustion appliances

[2019: GV2]

Compliance with G2P1(a) and G2P1(b) is verified when—

(a) components used within an appliance and its installation are constructed from—

(i) heat-resistant materials for maximum operating temperatures not less than 600℃, where the material complies with (c); or

(ii) heat-tolerant materials for maximum operating temperatures more than 150℃ and less than 600℃, where the material complies with (c); and

(b) the building elements surrounding the appliance maintain their designed function and material properties inclusive of a full range of thermal movements when exposed to the heat effects of the appliance; and

(c) a sample of the material is tested to the maximum operating temperature, specified in (a)(i) or (a)(ii) for a minimum of 96 hours; and

(d) the tested sample, when allowed to cool, is free from—

(i) visible cracks and fractures; and

(ii) visible indication of de-lamination; and

(iii) linear distortion in excess of the equivalent of 10 mm per metre, and

(iv) deterioration of the appearance of any surface finish, when compared to an unheated sample.

Deemed-to-Satisfy Provisions

G2D1 Deemed-to-Satisfy Provisions

[2019: G2.0]

(1) Where a *Deemed-to-Satisfy Solution* is proposed, *Performance Requirements* G2P1 and G2P2 are satisfied by complying with G2D2 to G2D4.

(2) Where a *Performance Solution* is proposed, the relevant *Performance Requirements* must be determined in accordance with A2G2(3) and A2G4(3) as applicable.

G2D2 Installation of appliances

[2019: G2.2]

The installation of a stove, heater or similar appliance in a building must comply with:

(a) Domestic solid-fuel burning appliances — installation: AS/NZS 2918.

(b) For *boilers* and *pressure vessels*: Specification 30.

G2D3 Open fireplaces

[2019: G2.3]

An open fireplace, or solid-fuel burning appliance in which the fuel-burning compartment is not enclosed, must have—

(a) a hearth constructed of stone, concrete, masonry or similar *non-combustible* material so that—

(i) it extends not less than 300 mm beyond the front of the fireplace opening and not less than 150 mm beyond each side of that opening; and

(ii) it extends beyond the limits of the fireplace or appliance not less than 300 mm if the fireplace or appliance is free-standing from any wall of the room; and

(iii) its upper surface does not slope away from the grate or appliance; and

(iv) *combustible* material situated below or around the external edge of the hearth, but not below that part *required* to extend beyond the fireplace opening or the limits of the fireplace, is not less than 150 mm from the upper surface of the hearth; and

(b) walls forming the sides and back of the fireplace up to not less than 300 mm above the underside of the arch or lintel which—

(i) are constructed in 2 separate leaves of solid masonry with a total combined thickness not less than 180 mm, excluding any cavity; and

(ii) do not consist of concrete block masonry in the construction of the inner leaf; and

(c) walls of the chimney above the level referred to in (b)—

(i) constructed of masonry units with a net volume, excluding cored and similar holes, not less than 75% of their gross volume, measured on the overall rectangular shape of the units, and with an actual thickness of not less than 100 mm; and

(ii) lined internally to a thickness of not less than 12 mm with rendering consisting of 1 part cement, 3 parts lime, and 10 parts sand by volume, or other suitable material; and

(d) suitable *damp-proof courses* or *flashings* to maintain weatherproofing.

G2D4 Incinerator rooms

[2019: G2.4]

(1) If an incinerator is installed in a building, any hopper giving access to a charging chute must be—

(a) *non-combustible*; and

(b) gas-tight when closed; and

(c) designed to return to the closed position after use; and

(d) not attached to a chute that connects directly to a flue unless the hopper is located in the open air; and

(e) not located in a *required exit*.

(2) A room containing an incinerator must be separated from other parts of the building by construction with an FRL of not less than 60/60/60.

Part G3 Atrium construction

Introduction to this Part

This Part provides additional *Deemed-to-Satisfy Provisions* for buildings that contain an *atrium*. The *Deemed-to-Satisfy Provisions* of this Part cover *atrium well* dimensions, construction, fire separation, *exits* and fire and smoke control systems.

Deemed-to-Satisfy Provisions

G3D1 Application of Part

[2019: G3.1]

This Part does not apply to an *atrium* which—

(a) connects only 2 *storeys*; or

(b) connects only 3 *storeys* if—

(i) each *storey* is provided with a sprinkler system (other than a FPAA101D or FPAA101H system) complying with Specification 17 throughout; and

(ii) one of those *storeys* is situated at a level at which there is direct egress to a road or *open space*.

G3D2 Dimensions of atrium well

[2019: G3.2]

An *atrium well* must have a width throughout the well that is able to contain a cylinder having a horizontal diameter of not less than 6 m.

G3D3 Separation of atrium by bounding walls

[2019: G3.3]

An *atrium* must be separated from the remainder of the building at each *storey* by bounding walls set back not more than 3.5 m from the perimeter of the *atrium well* except in the case of the walls at not more than 3 consecutive *storeys* if—

(a) one of those *storeys* is at a level at which direct egress to a road or *open space* is provided; and

(b) the sum of the *floor areas* of those *storeys* that are contained within the *atrium* is not more than the maximum area that is permitted in Table C3D3.

G3D4 Construction of bounding walls

[2019: G3.4]

Bounding walls must—

(a) have an FRL of not less than 60/60/60, and—

(i) extend from the floor of the *storey* to the underside of the floor next above or to the underside of the roof; and

(ii) have any door openings protected with *self-closing* or *automatic* –/60/30 fire doors; or

(b) be constructed of fixed toughened safety glass, or wired safety glass in *non-combustible* frames, with—

(i) any door openings fitted with a *self-closing* smoke door complying with Specification 12; and

(ii) the walls and doors protected with wall-wetting systems in accordance with Specification 31; and

(iii) a fire barrier with an FRL of not less than –/60/30 installed in any ceiling spaces above the wall.

G3D5 Construction at balconies

[2019: G3.5]

If a bounding wall separating an *atrium* from the remainder of the building is set back from the perimeter of the *atrium well*, a barrier that is imperforate, *non-combustible*, and not less than 1 m high, must be provided.

G3D6 Separation at roof

[2019: G3.6]

In an *atrium*—

(a) the roof must have the FRL prescribed in Table S5C11g; or

(b) the roof structure and membrane must be protected by a sprinkler system (other than a FPAA101D or FPAA101H system) complying with Specification 17.

G3D7 Means of egress

[2019: G3.7]

All areas within an *atrium* must have access to at least 2 *exits*.

G3D8 Fire and smoke control systems

[2019: G3.8]

Sprinkler systems, smoke control systems, fire detection and alarm systems, and emergency warning and intercom systems must be installed in compliance with Specification 31.

Part G4 Construction in alpine areas

Introduction to this Part

This Part contains additional requirements for buildings constructed in an *alpine area* to address the potential for snow and ice to obstruct or delay evacuation and fire fighting or cause a hazard by falling on people.

Objectives

G4O1 Objective

[2019: GO4]

The Objective of this Part is to safeguard occupants in *alpine areas* from illness or injury from an emergency while evacuating a building.

Applications

G4O1 applies to a building constructed in an *alpine area*.

Functional Statements

G4F1 Construction in alpine areas

[2019: GF4.1]

A building in an *alpine area* is to be provided with additional measures in view of the increased difficulties in fire-fighting and maintaining access and means of egress in snow conditions.

Applications

G4F1 only applies to a building constructed in an *alpine area*.

Performance Requirements

G4P1 External doorways

[2019: GP4.1]

An external doorway from a building in an *alpine area* must be installed so that opening the door is not obstructed by snow or ice.

Applications

G4P1 applies to a building constructed in an *alpine area* and overrules other *Performance Requirements* of NCC Volume One.

G4P2 Structures forming pathways in snow conditions

[2019: GP4.2]

A building in an *alpine area* containing external trafficable structures forming part of the means of egress must be

constructed so that those structures remain, as far as practicable, useable under snow conditions.

Applications

G4P2 applies to a building constructed in an *alpine area* and overrules other *Performance Requirements* of NCC Volume One.

G4P3 Control of falling ice and snow

[2019: GP4.3]

A building in an *alpine area* must be constructed so that snow or ice is not shed from the building onto the allotment, any adjoining allotment, road or public space in a location or manner that will—

(a) obstruct a means of egress from any building to a road or *open space*; or

(b) otherwise endanger people.

Applications

G4P3 applies to a building constructed in an *alpine area* and overrules other *Performance Requirements* of NCC Volume One.

G4P4 Fire safety systems in alpine areas

[2019: GP4.4]

A building in an *alpine area* must have a *fire safety system* installed to—

(a) facilitate fire-fighting operations; and

(b) alert occupants in the event of an emergency.

Applications

G4P4 applies to a building constructed in an *alpine area* and overrules other *Performance Requirements* of NCC Volume One.

Deemed-to-Satisfy Provisions

G4D1 Deemed-to-Satisfy Provisions

[2019: G4.0]

(1) Where a *Deemed-to-Satisfy Solution* is proposed, *Performance Requirements* G4P1 to G4P4 are satisfied by complying with—

(a) G4D2 to G4D8; and

(b) for a building containing an *occupiable outdoor area*, Part G6.

(2) Where a *Performance Solution* is proposed, the relevant *Performance Requirements* must be determined in accordance with A2G2(3) and A2G4(3) as applicable.

G4D2 Application of Part

[2019: G4.1]

(1) The *Deemed-to-Satisfy Provisions* of this Part apply to any building constructed in an *alpine area* in addition to other *Deemed-to-Satisfy Provisions* of NCC Volume One.

(2) Where any *Deemed-to-Satisfy Provisions* are in conflict, the provisions of this Part take precedence.

G4D3 External doors

[2019: G4.3]

External doors which may be subject to the build-up of snow must—

(a) open inwards or slide; and

(b) if inward opening, be marked "OPEN INWARDS" on the inside face of the door in letters not less than 75 mm high in a colour contrasting with that of the background; and

(c) be constructed so that the threshold is not less than 900 mm above the adjoining surface; and

(d) if it serves a corridor or stairway, be positioned in an alcove or recess with—

(i) no horizontal dimensions of the alcove or recess less than twice the width of the door; and

(ii) the door positioned to open against a wall such that the distance from any part of its swing to the nearest point of entry of the stairway or corridor is not less than the width of the door.

G4D4 Emergency lighting

[2019: G4.4]

In a Class 2, 3, 5, 6, 7, 8 or 9 building or Class 4 part of a building, a system of emergency lighting must be installed in accordance with the *Deemed-to-Satisfy Provisions* of Part E4—

(a) in every stairway (other than those within a *sole-occupancy unit* in a Class 2 or 3 building or Class 4 part of a building); and

(b) in every *public corridor* or the like leading to an *exit*; and

(c) externally above every doorway opening to a road or *open space*; and

(d) in any *storey* of the building if illumination sufficient for safe egress will not be available under conditions of emergency.

G4D5 External trafficable structures

[2019: G4.5]

External stairways, ramps, access bridges or other trafficable structures serving the building must—

(a) have a floor surface that consists of expanded mesh if it is used as a means of egress; and

(b) have any *required* barrier designed so that its sides are not less than 75% open; and

(c) for a stairway, have *goings* (G), *risers* (R) and slope relationship quantity (2R + G) in accordance with—

(i) Table D3D14; or

(ii) Table G4D5; and

(d) for a ramp serving as an *exit* and not serving as an *accessible* ramp, have a gradient not steeper than 1:12; and

(e) where a ramp is also serving as an *accessible* ramp under Part D4, be in accordance with AS 1428.1.

Table G4D5: Alternate stair riser and going dimensions

Riser (R)		Going (G)		Slope relationship (2R + G)	
Max	Min	Max	Min	Max	Min
150	115	375	355	675	605

Table Notes

Dimensions are in mm.

G4D6 Clear space around buildings

[2019: G4.6]

A building must be so constructed that—

(a) if any part of an *external wall* is more than 3.6 m above the natural ground level — the distance of that part from a boundary other than a road alignment is not less than 2.5 m plus an additional 100 mm for each 300 mm or part thereof by which that part of the wall exceeds a height of 3.6 m; and

(b) if an *exit* doorway discharges into a court between wings of a building and that area may be used for vehicle access to the building, the distance between wings must be not less than 4 m; and

(c) where an *exit* doorway discharges opposite a feature that could entrap snow or an embankment that is more than 900 mm above the threshold of the doorway, a distance of not less than 4 m must be provided between the doorway and the feature.

G4D7 Fire-fighting services and equipment

[2019: G4.8]

(1) Every Class 2, 3, 5, 6, 7, 8 or 9 building must have—

(a) a manually operated fire alarm system with call-points complying with AS 1670.1; and

(b) fire hydrants installed in accordance with E1D2(2); and

(c) fire hose reels installed in accordance with E1D3(2) to (7), except that in a Class 2 or 3 building—

(i) for the purpose of E1D3(2), a *sole-occupancy unit* is considered to be a *fire compartment*; and

(ii) for the purpose of E1D3(3)(b), a *sole-occupancy unit* may be served by a single fire hose reel located at the level of egress from that *sole-occupancy unit*; and

(iii) for the purpose of E1D3(6), a fire hose may pass through a doorway in bounding construction referred to in C4D12.

(2) The requirements of (1)(c) do not apply to a Class 8 *electricity network substation*.

G4D8 Fire orders

[2019: G4.9]

Every Class 2, 3 or 9 building must display a notice clearly marked “FIRE ORDERS” in suitable locations near the main entrance and on each *storey*, explaining—

(a) the method of operation of the fire alarm system and the location of all call-points; and

(b) the location and methods of operation of all fire-fighting equipment; and

(c) the location of all *exits*; and

(d) the procedure for evacuation of the building.

Part G5 Construction in bushfire prone areas

Introduction to this Part

This Part contains additional requirements for the construction of buildings located in *designated bushfire prone areas*, to address the additional risks posed by bushfire attack.

Objectives

VIC G5O1

G5O1 Objective

[2019: GO5]

The Objective of this Part is to—

(a) safeguard occupants from injury from the effects of a bushfire; and

(b) protect buildings from the effects of a bushfire; and

(c) facilitate temporary shelter for building occupants who may be unable to readily evacuate the building prior to a bushfire.

Applications

(1) G5O1(a) and (b) apply in a *designated bushfire prone area* to—

(a) a Class 2 or 3 building; or

(b) a Class 10a building or deck associated with a Class 2 or 3 building.

(2) G5O1(a), (b) and (c) apply in a *designated bushfire prone area* to—

(a) a Class 9a *health-care building*; and

(b) a Class 9b—

(i) *early childhood centre*; and

(ii) primary or secondary *school*; and

(c) a Class 9c *residential care building*; and

(d) a Class 10a building or deck immediately adjacent or connected to a building of a type listed in (a) to (c).

Functional Statements

VIC G5F1

G5F1 Construction in bushfire prone areas

[2019: GF5.1]

A building constructed in a *designated bushfire prone area*—

(a) is to provide a resistance to bushfires in order to reduce the danger to life and minimise the risk of the loss of the building; and

(b) if occupied by people who may be unable to readily evacuate the building prior to a bushfire, is to be constructed so as to provide its occupants shelter from the direct and indirect actions of a bushfire.

Applications

(1) G5F1(a) applies in a *designated bushfire prone area* to—

(a) a Class 2 or 3 building; or

(b) a Class 10a building or deck associated with a Class 2 or 3 building; or

(c) a Class 10a building or deck immediately adjacent or connected to a building of a type listed in (2)(a), (b) or (c)

(2) G5F1(a) and (b) apply in a *designated bushfire prone area* to—

(a) a Class 9a *health-care building*; and

(b) a Class 9b—

(i) *early childhood centre*; and

(ii) primary or secondary *school*; and

(c) a Class 9c *residential care building*.

Performance Requirements

NSW G5P1

QLD G5P1

TAS G5P1

VIC G5P1

G5P1 Bushfire resistance

[2019: GP5.1]

A building that is constructed in a *designated bushfire prone area* must be designed and constructed to—

(a) reduce the risk of ignition from a *design bushfire* with an annual exceedance probability not more than 1:100 years, or 1:200 years for a Class 9 building; and

(b) take account of the assessed duration and intensity of the *fire actions* of the *design bushfire*; and

(c) be designed to prevent internal ignition of the building and its contents; and

(d) maintain the structural integrity of the building for the duration of the *design bushfire*.

Applications

G5P1 applies in a *designated bushfire prone area* to—

(a) a Class 2 or 3 building; and

(b) a Class 9a *health-care building*; and

(c) a Class 9b—

(i) *early childhood centre*; and

(ii) primary or secondary *school*; and

(d) a Class 9c *residential care building*; and

(e) a Class 10a building or deck immediately adjacent or connected to a building of a type listed in (a) to (d).

NSW G5P2

TAS G5P2

VIC G5P2

G5P2 Additional bushfire requirements for certain Class 9 buildings

[New for 2022]

A building that is constructed in a *designated bushfire prone area* and occupied by people who may be unable to readily evacuate the building prior to a bushfire must, to the degree necessary—

(a) reduce the risk of an untenable indoor environment for occupants during a bushfire event, appropriate to the—

(i) location of the building relative to fire hazards, including—

(A) classified vegetation; and

(B) adjacent buildings, structures and movable objects; and

(C) carparking areas and allotment boundaries; and

(D) other *combustible* materials; and

(ii) number of occupants to be accommodated within the building; and

(iii) intensity of bushfire attack on the building; and

(iv) duration of occupancy; and

(v) intensity of potential consequential fires; and

(vi) occupant tenability within the building before, during and after the bushfire event; and

(vii) combined effects of structural, fire exposure and other effects to which the building may reasonably be subjected; and

(viii) provision of fire fighting equipment and water supply to facilitate protection of the building; and

(b) be provided with vehicular access to the *site* to enable firefighting and emergency personnel to defend or evacuate the building; and

(c) have access to a sufficient supply of water for firefighting purposes on the *site*; and

(d) provide safe access within the *site* to the building (including carparking areas), as well as safe egress after the bushfire event.

Applications

G5P2 applies to the following buildings located in a *designated bushfire prone area*—

(a) a Class 9a *health-care building*; and

(b) a Class 9b—

(i) *early childhood centre*; and

(ii) primary or secondary *school*; and

(c) a Class 9c *residential care building*.

Notes

G5P2 does not guarantee the safety of building occupants or the maintenance of tenable conditions within a building during a bushfire event.

Verification Methods

G5V1 Buildings in bushfire prone areas

[2019: GV5]

(1) Compliance with *Performance Requirement* G5P1 is verified if the ignition probability for a building exposed to a *design bushfire* does not exceed 10%.

(2) Bushfire design actions must be determined in consideration of the annual probability of a *design bushfire* derived from—

(a) assigning the building or structure with an Importance Level in accordance with (3); and

(b) determining the corresponding annual probability of exceedance in accordance with Table G5V1.

(3) A building or structure's Importance Level must be identified as one of the following:

(a) Importance Level 1 — where the building or structure presents a low degree of hazard to life and *other property* in the case of failure.

(b) Importance Level 2 — where the building or structure is not of Importance Level 1, 3 or 4 or is a Class 2 building accommodating 12 people or less.

(c) Importance Level 3 — where the building is designed to contain a large number of people and is a—

(i) Class 2 building accommodating more than 12 people; or

(ii) Class 3 boarding house, guest house, hostel, lodging house or backpackers accommodation; or

(iii) Class 3 residential part of a hotel or motel; or

(iv) Class 3 residential part of a *school*.

(d) Importance Level 4 — where the building or structure is—

(i) essential to emergency management or post-disaster recovery; or

(ii) associated with hazardous facilities; or

(iii) subject to a necessary 'defend in place' strategy and is a—

(A) Class 3 accommodation building for the aged, children or people with disabilities; or

(B) Class 3 residential part of a health-care building which accommodates members of staff; or

(C) Class 3 residential part of a *detention centre*; or

(D) building that operates in the event of a bushfire emergency, such as a public bushfire shelter or a bushfire emergency control centre.

(4) The ignition probability for a building must be assessed by application of the following:

(a) An event tree analysis of relevant bushfire scenarios.

(b) *Design bushfire* conditions that include combinations of the following actions appropriate to the distance between the building and the bushfire hazard:

(i) Direct attack from airborne burning embers.

(ii) Burning debris and accumulated embers adjacent to a building element.

(iii) Radiant heat from a bushfire front.

(iv) Direct flame attack from a bushfire front.

(5) Applied *fire actions* must allow for reasonable variations in—

(a) fire weather; and

(b) vegetation, including fuel load, burning behaviour of vegetation (including the potential for crown fires); and

(c) the distance of the building from vegetation; and

(d) topography, including slopes and features that may shield; and

(e) ignition of adjacent buildings, building elements, plants, mulch and other materials; and

(f) effective size of fire front; and

(g) duration of exposure; and

(h) flame height; and

(i) flame tilt; and

(j) flame adhesion to sloping land; and

(k) the height of the building and its elements.

(6) The assessment process must include consideration of—

(a) the probability of non-complying construction of critical aspects of an approved design; and

(b) the probability of critical aspects of an approved design being fully functional during the life of the building; and

(c) inclusion of safety factors; and

(d) sensitivity analysis of critical aspects of a proposed design.

Limitations

G5V1 does not apply to a Class 9 building.

Notes

For a building that is subject to G5P2, and therefore outside the scope of G5V1, the building would need to comply with either—

(a) *Performance Requirement* G5P2 by means of a *Performance Solution*; or

(b) the *Deemed-to-Satisfy Provisions* of G5D4 if the building is located in an area subject to a Bushfire Attack Level (BAL) not exceeding BAL – 12.5.

Table G5V1: Annual Probability of Exceedance (APE) for design bushfire actions

Importance Level	Complex analysis APE for bushfire exposure	Simple analysis APE for weather conditions (*design bushfire*)
1	No requirement	No requirement
2	1:500	1:50
3	1:1000	1:100
4	1:2000	1:200

Table Notes

Complex analysis must consider the probability of ignition, fire spread to the urban interface and penetration of the urban interface coincident with fire weather conditions.

Deemed-to-Satisfy Provisions

G5D1 Deemed-to-Satisfy Provisions

[2019: G5.0]

SA G5D1(1)

(1) Where a *Deemed-to-Satisfy Solution* is proposed, *Performance Requirements* G5P1 and subject to G5D2, G5P2, are satisfied by complying with G5D3 and G5D4.

(2) Where a *Performance Solution* is proposed, the relevant *Performance Requirements* must be determined in accordance with A2G2(3) and A2G4(3) as applicable.

NSW G5D2

QLD G5D2

VIC G5D2

G5D2 Application of Part

[2019: G5.1]

The *Deemed-to-Satisfy Provisions* of this Part apply in a *designated bushfire prone area* to—

(a) a Class 2 or 3 building; or

(b) a building located in an area subject to a Bushfire Attack Level (BAL) not exceeding BAL—12.5, determined in accordance with AS 3959 that is—

(i) a Class 9a *health-care building*; or

(ii) a Class 9b—

(A) *early childhood centre*; or

(B) primary or secondary *school*; or

(iii) a Class 9c *residential care building*; or

(c) a Class 10a building or deck immediately adjacent or connected to a—

(i) Class 2 or 3 building; or

(ii) a building of a type listed in (b).

Notes

(1) If a building of a type listed in (b) or (c)(ii) is subject to a BAL exceeding BAL—12.5, the building would need to comply with *Performance Requirement* G5P2 by means of a *Performance Solution*. There are no *Deemed-to-Satisfy Provisions* for these buildings.

NSW G5D3

G5D3 Protection — residential buildings

[2019: G5.2]

In a *designated bushfire prone area* the following must comply with AS 3959:

(a) A Class 2 or 3 building.

(b) A Class 10a building or deck immediately adjacent or connected to a Class 2 or 3 building.

NSW G5D4

VIC G5D4

G5D4 Protection — certain Class 9 buildings

[New for 2022]

(1) In a *designated bushfire prone area* the following must comply with Specification 43:

(a) A Class 9a *health-care building*.

(b) A Class 9b—

(i) *early childhood centre*; or

(ii) primary or secondary *school*.

(c) A Class 9c *residential care building*.

(2) In a *designated bushfire prone area*, a Class 10a building or deck immediately adjacent or connected to a building of a type listed in (1) must comply with S43C2 and S43C13.

SA G5D5

Part G6 Occupiable outdoor areas

Introduction to this Part

This Part provides additional *Deemed-to-Satisfy Provisions* for buildings that include an *occupiable outdoor area*.

Deemed-to-Satisfy Provisions

G6D1 Application of Part

[2019: G6.1]

(1) The *Deemed-to-Satisfy Provisions* of this Part apply to buildings containing an *occupiable outdoor area* in addition to the other *Deemed-to-Satisfy Provisions* of NCC Volume One.

(2) The *Deemed-to-Satisfy Provisions* of this Part take precedence where there is a difference to the *Deemed-to-Satisfy Provisions* of Sections C, D, E, F and G.

(3) Except for G6D2, the *Deemed-to-Satisfy Provisions* of this Part do not apply to—

(a) an *occupiable outdoor area* of a *sole-occupancy unit* in a Class 2 or 3 building, Class 9c building or Class 4 part of a building; or

(b) an *occupiable outdoor area* with an area less than $10m^2$.

Explanatory Information

Part G6 contains *Deemed-to-Satisfy Provisions* additional to those contained in Sections C, D, E, F and G for *occupiable outdoor areas*.

G6D2 Fire hazard properties

[2019: G6.2]

(1) Subject to (2), a lining, material or assembly in an *occupiable outdoor area* must comply with C2D11 as for an internal element.

(2) The following *fire hazard properties* of a lining, material or assembly in an *occupiable outdoor area* are not *required* to comply with C2D11:

(a) *Average specific extinction area*.

(b) *Smoke-Developed Index*.

(c) *Smoke development rate*.

(d) *Smoke growth rate index* ($SMOGRA_{RC}$).

G6D3 Fire separation

[2019: G6.3]

For the purposes of the *Deemed-to-Satisfy Provisions* of C3D8, C3D9 and C3D10, a reference to a *storey* includes an *occupiable outdoor area*, however a *fire wall* cannot be used to separate an *occupiable outdoor area* into different *fire compartments*.

G6D4 Provision for escape

[2019: G6.4]

For the purposes of the *Deemed-to-Satisfy Provisions* of Part D2, a reference to a *storey* or room includes an *occupiable outdoor area*.

G6D5 Construction of exits

[2019: G6.5]

For the purposes of the *Deemed-to-Satisfy Provisions* of Part D3, a reference to a *storey* or room includes an *occupiable outdoor area*.

G6D6 Fire fighting equipment

[2019: G6.6]

Except for S17C7(2)(a), for the purposes of the *Deemed-to-Satisfy Provisions* of Part E1, a reference to a *storey* includes an *occupiable outdoor area*.

Notes

An *occupiable outdoor area* is not a *storey* for the purposes of Schedule 2 of the NCC and therefore is not included in the determination of *rise in storeys*.

G6D7 Lift installations

[2019: G6.7]

For the purposes of the *Deemed-to-Satisfy Provisions* of Part E3, a reference to a *storey* includes an *occupiable outdoor area*.

G6D8 Visibility in an emergency, exit signs and warning systems

[2019: G6.8]

For the purposes of the *Deemed-to-Satisfy Provisions* of Part E4, a reference to a *storey* includes an *occupiable outdoor area*.

G6D9 Light and ventilation

[2019: G6.9]

For the purposes of the *Deemed-to-Satisfy Provisions* of F6D5, F6D9 and F6D10, a reference to a room includes an *occupiable outdoor area*.

G6D10 Fire orders

[2019: G6.10]

For the purposes of the *Deemed-to-Satisfy Provisions* of G4D8, a reference to a *storey* includes an *occupiable outdoor area*.

Part G7 Livable housing design

NSW Part G7

Introduction to this Part

This Part sets requirements for dwellings to include features that are designed to improve their accessibility and usability for occupants and visitors, including those with a mobility-related disability.

Notes

Part G7 Livable housing design does not take effect until 1 October 2023.

Notes: Tasmania Part G7 Livable housing design

For Tasmania, Part G7 does not take effect until 1 October 2024.

Objectives

G7O1 Objective

[New for 2022]

The Objective of this Part is to ensure that housing is designed to meet the needs of the community, including older people and those with a mobility-related disability.

Applications

G7O1 only applies to a Class 2 *sole-occupancy unit*.

Functional Statements

G7F1 Livable housing design

[New for 2022]

A Class 2 *sole-occupancy unit* is to be designed such that it is—

(a) easy to enter; and

(b) easy to navigate in and around; and

(c) capable of easy and cost effective adaptation; and

(d) responsive to the changing needs of occupants.

Applications

G7F1 only applies to a Class 2 *sole-occupancy unit*.

Performance Requirements

G7P1 Livable housing design

[New for 2022]

Each *sole-occupancy unit* in a Class 2 building must be provided with—

(a) at least one level and step-free entrance door into the *sole-occupancy unit* from an *accessible* part of the floor on which it is located; and

(b) internal doors and corridors which facilitate unimpeded movement between spaces; and

(c) a *sanitary compartment* that—

(i) facilitates independent access and use; and

(ii) is located on the entry level of the *sole-occupancy unit*; and

(d) a shower that facilitates independent access and use; and

(e) the walls of a *sanitary compartment* referred to in (c), the shower referred to in (d) and a bath (where installed, other than a freestanding bath) constructed so as to facilitate future installation of grabrails, or the like, in a way that minimises the removal of existing wall linings.

Applications

G7P1(a) only applies to a *sole-occupancy unit* that is located on an *accessible* floor.

Deemed-to-Satisfy Provisions

G7D1 Deemed-to-Satisfy Provisions

[New for 2022]

(1) Where a *Deemed-to-Satisfy Solution* is proposed, *Performance Requirement* G7P1 is satisfied by complying with G7D2.

(2) Where a *Performance Solution* is proposed, the relevant *Performance Requirements* must be determined in accordance with A2G2(3) and A2G4(3) as applicable.

G7D2 Livable housing design

[New for 2022]

Each *sole-occupancy unit* in a Class 2 building must comply with the ABCB Standard for Livable Housing Design, except for Part 1.

Explanatory Information

Part 1 of the ABCB Standard for Livable Housing Design requires a step-free access path from a parking space or property boundary, to the dwelling entry door. For Class 2 buildings, this requirement is already addressed by Part D4 and the Disability (Access to Premises—Buildings) Standards 2010. Therefore, it is not necessary to apply Part 1 of the ABCB Standard for Livable Housing Design to a Class 2 building.

Specification 30 Installation of boilers and pressure vessels

S30C1 Scope

[2019: Spec G2.2: 1]

This Specification sets out the requirements for the installation of *boilers* and *pressure vessels* in buildings.

S30C2 Explosion relief

[2019: Spec G2.2: 2.1]

The distance between the vent of any explosion relief device for a *boiler* or *pressure vessel* and any adjacent wall, roof, ceiling or other solid construction shall be calculated in accordance with Table S30C2.

Table S30C2: Minimum clearances for explosion relief

Clearance from	Minimum clearance (metres)
Adjacent wall or ceiling/roof	$0.4(V/3)^{1/3}$ or 0.4 m, whichever is the greater
Two walls at right angles; or one wall and a ceiling/roof	$0.6(V/3)^{1/3}$ or 0.6 m, whichever is the greater

Table Notes

V is the internal volume of the *boiler* or *pressure vessel* being vented up to the connection of the flue.

S30C3 Floors and drainage

[2019: Spec G2.2: 2.2]

(1) Floor surfaces beneath *boilers* and *pressure vessels* shall be *water resistant* and formed to drain away from supports and structural building elements.

(2) Where a safe tray is provided to trap liquids, it must be manufactured from a material resistant to corrosion from the contents of the *boiler* or *pressure vessel*.

S30C4 Protection from heat

[2019: Spec G2.2: 2.3]

Building elements surrounding a *boiler* must be protected from any surface heat by refractory material or effective air spaces so that—

(a) steel elements do not exceed a temperature of more than 300°C; and

(b) concrete elements do not exceed a temperature of more than 200°C; and

(c) timber elements do not exceed a temperature of more than 150°C.

Specification 31 Fire and smoke control systems in buildings containing atriums

S31C1 Scope

[2019: Spec G3.8: 1]

This Specification sets out the requirements for the design and operation of systems of fire and smoke control in buildings containing an *atrium*.

Automatic fire sprinkler system

S31C2 General requirement — automatic fire sprinkler system

[2019: Spec G3.8: 2.1]

A sprinkler system (other than a FPAA101D or FPAA101H system) complying with Specification 17 must be installed in every building containing an *atrium*, except where varied or superseded by this Specification.

S31C3 Roof protection

[2019: Spec G3.8: 2.2]

(1) A roof of an *atrium* which does not have the FRL prescribed in Specification 5 or the *Deemed-to-Satisfy Provisions* of Part C3 must be protected by *automatic* sprinklers arranged to wet both the covering membrane and supporting structure if the roof is—

(a) less than 12 m above the floor of the *atrium* or the floor of the highest *storey* where the bounding construction is set back more than 3.5 m from the *atrium well* if a Class 2, 3, 5 or 9 part of a building is open to the *atrium*; or

(b) less than 20 m above the floor of the *atrium* or the floor of the highest *storey* where the bounding construction is set back more than 3.5 m from the *atrium well* if a Class 6, 7 or 8 part of a building is open to the *atrium*.

(2) The temperature rating of sprinkler heads required by (1) must be within the range 79°C – 100°C

S31C4 Atrium floor protection

[2019: Spec G3.8: 2.3]

The floor of the *atrium* must be protected by sprinklers with—

(a) the use of sidewall pattern sprinkler heads together with overhead sprinklers where dictated by the dimensions of the *atrium*; and

(b) sprinkler heads of the quick response type.

S31C5 Sprinkler systems to glazed walls

[2019: Spec G3.8: 2.4.1 – 2.4.5]

(1) Where an *atrium* is separated from the remainder of the building by walls or doors incorporating glazing, a wall wetting system must be provided to protect the glazing as follows:

(a) On the *atrium* side of the glazing — to all glazed walls which are set back more than 3.5 m from the *atrium well*.

(b) On the *atrium* side of the glazing — to all glazed walls which are not set back, or are set back 3.5 m or less, from the *atrium well*, for all levels which are less than—

(i) 12 m above the floor of an *atrium* or the floor of the highest *storey* where the bounding wall is set back

more than 3.5 m from the *atrium well* if a Class 2, 3, 5 or 9 part of the building is open to the *atrium*; or

(ii) 20 m above the floor of an *atrium* or the floor of the highest *storey* where the bounding wall is set back more than 3.5 m from the *atrium well* if a Class 6, 7 or 8 part of the building is open to the *atrium*.

(c) On the side of the glazing away from the *atrium well* — to all glazing forming part of the bounding wall at each *storey*.

(2) Sprinklers must be located in positions allowing full wetting of the glazing surfaces without wetting adjacent sprinkler heads.

(3) Sprinkler heads must be of the quick response type and have a maximum temperature rating of 74°C.

(4) The rate of water discharge to protect glazing must be not less than—

(a) on the *atrium* side of the glazing—

(i) 0.25 L/s.m^2 where glazing is not set back from the *atrium well*; or

(ii) 0.167 L/s.m^2 where glazing is set back from the *atrium well*; and

(b) on the side away from the *atrium well* — 0.167 L/s.m^2.

(5) In addition to that of the basic sprinkler protection for the building, the water supply to *required* wall wetting systems must be of adequate capacity to accommodate the following on the *atrium* side of the glazing:

(a) Where the bounding walls are set back less than 3.5 m from the *atrium well* — wall wetting of a part not less than 6 m long for a height of not less than—

(i) 12 m above the floor of an *atrium* or the floor of the highest *storey* where the bounding wall is set back more than 3.5 m from the *atrium well* if a Class 2, 3, 5 or 9 part of the building is open to the *atrium*; or

(ii) 20 m above the floor of an *atrium* or the floor of the highest *storey* where the bounding wall is set back more than 3.5 m from the *atrium well* if a Class 6, 7 or 8 part of the building is open to the *atrium*.

(b) Where the walls are set back 3.5 m or more from the *atrium well* — wetting of a part not less than 12 m long on one *storey*.

S31C6 Stop valves

[2019: Spec G3.8: 2.5]

(1) Basic sprinkler and wall wetting systems protecting a building containing an *atrium* must be provided with easily accessible and identified stop valves.

(2) Sprinkler and wall wetting systems must be provided with independent stop valves.

(3) Sprinkler heads protecting the roof of the *atrium* must be provided with a stop valve.

(4) Stop valves to wall wetting and roof sprinklers may be of the gate type.

(5) All sprinkler and wall wetting stop valves must be monitored to detect unauthorised closure.

Smoke control system

S31C7 General requirements — smoke control system

[2019: Spec G3.8: 3.1]

Except where varied or superseded by this Specification, mechanical air-handling systems in a building containing an *atrium* must comply with AS 1668.1.

S31C8 Operation of atrium mechanical air-handling systems

[2019: Spec G3.8: 3.2]

Mechanical air-handling systems serving an *atrium* must be designed to operate so that during a fire—

(a) a tenable atmosphere is maintained in all paths of travel along balconies to *required exits* during the period of

evacuation; and

(b) smoke exhaust fans serving the *atrium* are only activated when smoke enters the *atrium*; and

(c) central plant systems do not use the *atrium* as a return air path; and

(d) central plant systems which use return air paths remote from the *atrium*—

(i) cycle to the full outside air mode; and

(ii) stop supply air to the fire affected *storey* or *fire compartment*; and

(iii) continue to fully exhaust the fire affected *storey* or *fire compartment* and reduce the exhaust from other *storeys* or *fire compartments* by at least 75%; and

(iv) continue to supply air to *fire compartments* or *storeys* other than the fire affected *storey* or *fire compartment*; and

(e) fans performing relief or exhaust duty from the *atrium* stop normal operation; and

(f) floor by floor, or unitary, air-handling plant serving a single *fire compartment* or *storey*—

(i) ceases normal operation in the fire affected *storey* or *fire compartment*; and

(ii) commences full relief or exhaust from that fire affected *storey* or *fire compartment*; and

(iii) continue to supply air to *fire compartments* or *storeys* other than the fire affected *storey* or *fire compartment*.

S31C9 Activation of smoke control system

[2019: Spec G3.8: 3.3]

(1) The smoke control system must be activated by—

(a) operation of an *automatic* fire alarm; or

(b) operation of the sprinkler system; or

(c) a manual start switch.

(2) All controls for the smoke control system must be located—

(a) in the fire control room; or

(b) in the emergency control centre (if any); or

(c) adjacent to the sprinkler control valves; or

(d) incorporated in the Fire Indicator Panel.

S31C10 Smoke exhaust system

[2019: Spec G3.8: 3.4]

A smoke exhaust system serving an *atrium* must be designed on the basis of—

(a) the sprinkler system limiting the size of a fire to—

(i) a heat output of 1.5 MW and perimeter of 7.5 m if a Class 2, 3, 5 or 9 part of the building is open to the *atrium*; or

(ii) a heat output of 5 MW and perimeter of 12 m if a Class 6, 7 or 8 part of the building is open to the *atrium*; and

(b) a smoke plume reaching a level 3 m above the highest *storey* having a path of travel to a *required exit* along a balcony bounding the *atrium well*, and not less than—

(i) 12 m above the floor of an *atrium* or the floor of the highest *storey* where the bounding wall is set back more than 3.5 m from the *atrium well* if a Class 2, 3, 5 or 9 part of the building is open to the *atrium*; or

(ii) 20 m above the floor of an *atrium* or the floor of the highest *storey* where the bounding construction is set back more than 3.5 m from the *atrium well* if a Class 6, 7 or 8 part of the building is open to the *atrium*; and

(c) the smoke exhaust system discharging smoke at a rate of not less than that shown in Figure S31C10 for the appropriate height of smoke plume and fire size—

(i) from the top of the *atrium*; or

(ii) horizontally, where calculations of wind velocity induced pressure profiles for the building verify that the exhaust system will operate effectively for all wind directions.

Figure S31C10: Smoke exhaust rate

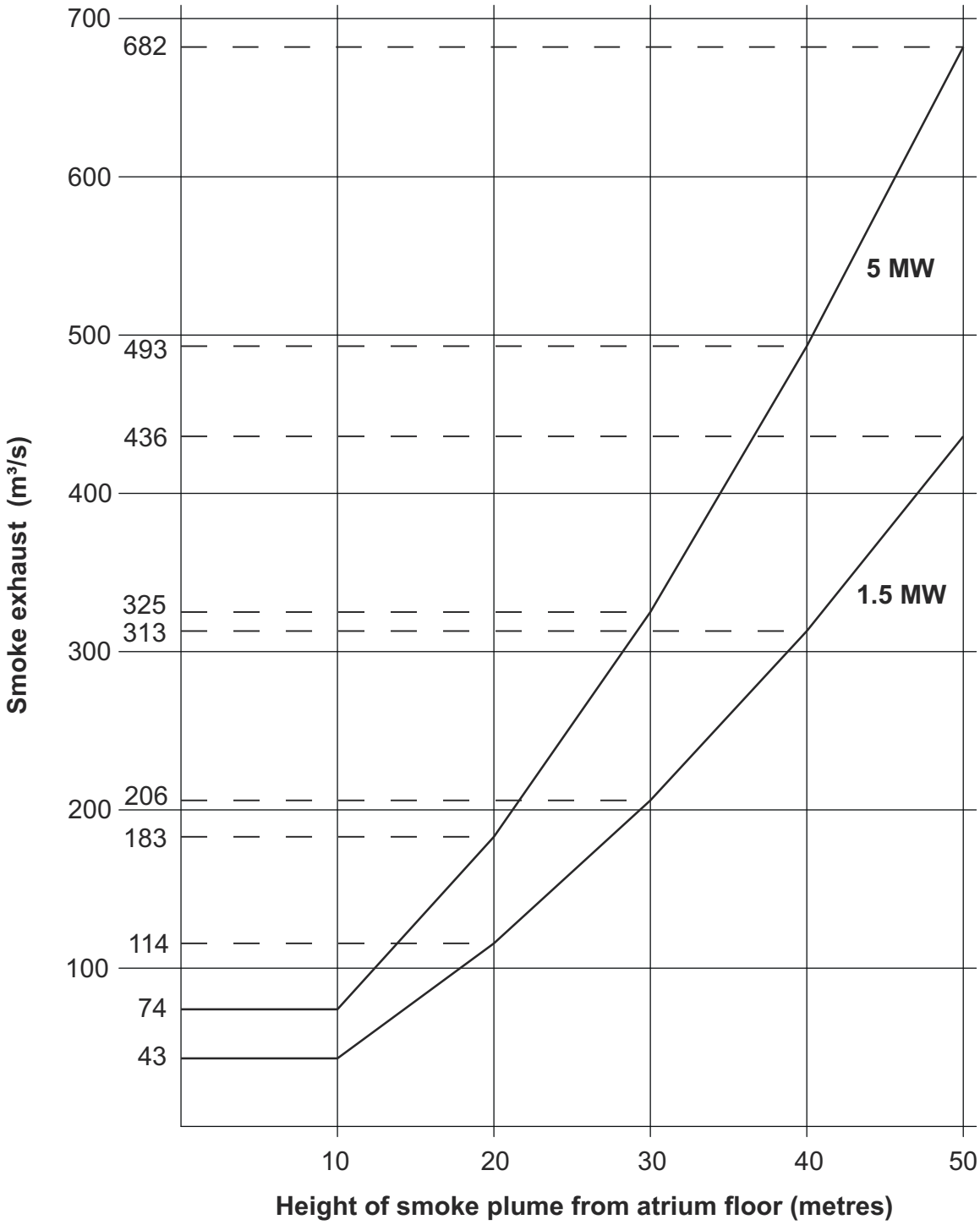

S31C11 Upward air velocity

[2019: Spec G3.8: 3.5]

Notwithstanding S31C10(c), the average upward air velocity in the *atrium*, due to the *required* smoke exhaust quantity must—

(a) be not less than 0.2 m/s at any level over an 18 m height above the floor of the *atrium*; and

(b) not exceed the following maximum velocities in *atriums* of constant cross sectional plan area:

(i) For occupancy classification qualifying for 1.5 MW fire size — 3.5 m/s.

(ii) For occupancy classifications qualifying for 5 MW fire size — 5 m/s.

S31C12 Exhaust fans

[2019: Spec G3.8: 3.6]

(1) Smoke exhaust must be provided by fans capable of continuous and *required* operation for a period of not less than 1 hour when handling exhaust gases at 200°C.

(2) Where a Class 2, 3 or 9 part of a building adjoins an *atrium*, the *atrium* must be provided with a minimum of 3 fans each capable of 50% of the total *required* smoke exhaust capacity.

(3) *Atriums* other than those referred to in (2) must be provided with a minimum of 2 fans each capable of 50% of the total *required* smoke exhaust capacity.

S31C13 Smoke-and-heat vents

[2019: Spec G3.8: 3.7]

Notwithstanding S31C12, *automatic* vents complying with AS 2665 may be used, except where a Class 6 part of a building adjoins the *atrium*, in lieu of exhaust fans provided that—

(a) the height from the *atrium* floor to the bottom of the highest vent is not more than 12 m; and

(b) the vents are fitted with a remote manual operation switch located adjacent to the sprinkler control valves or incorporated in the Fire Indicator Panel.

S31C14 Make-up air supply

[2019: Spec G3.8: 3.8]

(1) Uniformly distributed make-up air must be provided to the *atrium* exhaust system from—

(a) outside the *atrium* at or near the lowest *storey* level; and

(b) relief air from non-fire *storeys*.

(2) A discharge volume sufficient to maintain a velocity of not less than 0.1 m/s towards the *atrium well* must be provided on all *storeys* where the bounding wall is set back from the *atrium well*.

(3) The requirements of (1)(a) are satisfied if make-up air is provided to the *atrium* exhaust system in such a manner as to prevent, as far as possible, disturbance of the smoke layer due to turbulence created by the incoming air, through—

(a) openings directly from the outside air to the *atrium* and located as close as practicable to the lowest level of the *atrium*; or

(b) ducts from the outside air to the *atrium* which deliver air as close as practicable to the lowest level of the *atrium* and, where passing through any other *fire compartment* having an FRL of at least 60/60/60; or

(c) a combination of (a) or (b).

Fire detection and alarm system

S31C15 General requirements—fire detection and alarm system

[2019: Spec G3.8: 4.1]

Except where superseded by this Specification, *automatic* fire detection and alarm systems in a building containing an *atrium* must comply with AS 1670.1.

S31C16 Smoke detection system

[2019: Spec G3.8: 4.2]

Smoke detection within an *atrium*—

(a) must be provided within all outside air intakes and at individual floor return air intakes of all air-handling systems to initiate *automatic* fire mode operation, and where applicable, comply with the restart facilities in AS 1668.1; and

(b) must operate at an obscuration level not greater than 0.5% per metre with compensation for external airborne contamination as necessary; and

(c) must sample air within the *atrium* and in *storeys* where the bounding wall is set back more than 3.5 m from the *atrium well*; and

(d) must be calibrated to compensate for smoke dilution where sampling occurs within return air path common to more than one room; and

(e) may incorporate beam type detectors to sense smoke in an *atrium* in a Class 5, 6, 7 or 8 building with an *effective height* of not more than 25 m if the beam detectors are—

(i) located at intervals of not more than 3 *storeys*; and

(ii) arranged to scan at 90 degrees orientation to adjacent beam units.

S31C17 Smoke detection in spaces separated from the atrium by bounding walls

[2019: Spec G3.8: 4.3]

Smoke detection systems must be located at all return and relief air openings associated with the building air-handling systems and be—

(a) of the sampling type system as *required* in S31C16; or

(b) of the point type photoelectric smoke detector.

S31C18 Alarm systems

[2019: Spec G3.8: 4.4]

(1) A break-glass fire alarm point must be provided at each door to a *fire-isolated stairway*, *fire-isolated ramp* or *fire-isolated passageway*.

(2) A staged alarm must be provided where an air sampling type smoke detection system is provided for the *atrium*, and must operate as follows:

(a) Alert building management when abnormal smoke levels of 0.03% obscuration per metre are detected.

(b) Initiate a second alarm to management and start all smoke control systems including pressurisation of escape routes when smoke levels of 0.07% obscuration per metre are detected.

(c) Automatically call the *fire brigade*, activate the emergency warning and intercom system, and de-activate all plant not necessary for fire safety within the building when smoke levels of 0.09% obscuration per metre are detected.

(3) Beam and point type smoke detectors *required* must simultaneously operate all functions referred to above and activate at the level set out in AS 1670.1.

Additional requirements

S31C19 Emergency warning and intercom systems

[2019: Spec G3.8: 5]

A building containing an *atrium* must be provided with an emergency warning and intercom system which—

(a) complies with AS 1670.4; and

(b) incorporates visual warning devices that—

(i) operate upon the evacuation signal; and

(ii) display the word "EVACUATE" in red with letters conforming with the requirements of the *Deemed-to-Satisfy Provisions* of Part E4 for *exit* signs.

S31C20 Standby power system

[2019: Spec G3.8: 6]

(1) If a *required* path of travel to an *exit* is within an *atrium*, a suitable alternative power supply must be provided to operate *required* safety systems, including sprinkler systems and fire hydrant pumps, air handling systems, alarms, warning and communication systems and emergency lighting circuits.

(2) The alternative power supply must—

(a) be connected *automatically* if the normal power supply fails; and

(b) if located within the building, be separated from the remainder of the building by an enclosure with an FRL of at least 120/120/120; and

(c) be connected to the safety systems by means of cabling complying with C3D14(3).

(3) The requirements of (1) are satisfied by—

(a) a single medium voltage supply taken from an electricity substation situated within, or adjacent to, the building concerned where the power supply to the substation consists of two or more high voltage cables each taking electricity from separate transformers; or

(b) two or more medium voltage supplies each taking electricity from separate electricity substations situated—

(i) outside the building concerned; and

(ii) at a suitable distance from each other; or

(c) a single medium voltage supply taken from an electricity substation together with an electricity generating plant capable of—

(i) generating a medium voltage supply; and

(ii) starting and taking the *required* electrical load within a period of not more than 30 seconds from the time of normal supply failure.

S31C21 System for excluding smoke from fire-isolated exits

[2019: Spec G3.8: 7]

Required fire-isolated *exits* in a building containing an *atrium* must be protected from the entry of smoke in accordance with E2D3.

Specification 43 Bushfire protection for certain Class 9 buildings

S43C1 Scope

[New for 2022]

(1) This Specification sets out bushfire protection measures for buildings described in G5D4.

(2) Compliance with this Specification does not guarantee the safety of building occupants or the maintenance of tenable conditions within a building during a bushfire event.

Explanatory Information

The measures set out in this Specification are intended to operate in conjunction with other bushfire safety measures that lie outside the scope of the NCC. Information about these measures can be found in the Guide to NCC Volume One for Part G5.

NSW S43C2

S43C2 Separation from classified vegetation

[New for 2022]

(1) The building must be separated from classified vegetation—

(a) by not less than the minimum distances specified in Table S43C2; or

(b) such that radiant heat flux on exposed building elements will not exceed 10kW/m².

(2) For the purposes of (1), the term 'classified vegetation' has the meaning that it has in AS 3959.

Table S43C2: Minimum distance of building to classified vegetation

Vegetation classification	Slope	Minimum distance (m) of the building to classified vegetation
High risk	Upslope and flat land	60
High risk	Downslope max 20 degrees	110
Medium risk	Upslope and flat land	40
Medium risk	Downslope max 20 degrees	80
Low risk	Upslope and flat land	30
Low risk	Downslope max 20 degrees	50

Table Notes

(1) Table values are based on a Fire Danger Index of 100 in accordance with AS 3959.

(2) High risk equates to vegetation classification of forest and woodland in accordance with AS 3959.

(3) Medium risk equates to vegetation classification of scrub and rainforest in accordance with AS 3959.

(4) Low risk equates to vegetation classification of shrubland, mallee/mulga and grassland in accordance with AS 3959.

S43C3 Separation between buildings

[New for 2022]

(1) The building must be located not less than 12 m from any other building.

(2) The separation distance *required* by (1) need not be complied with if the building is constructed—

(a) with *external walls* that have an FRL of not less than 60/60/60 when tested from the outside, including any openings protected in accordance with AS 3959 for BAL—19 or greater; or

(b) for *external walls* and roof, using a material or system that satisfies the test criteria of AS 1530.8.1 for a radiant heat flux of 10 kW/m² or greater.

S43C4 Separation from allotment boundaries and carparking areas

[New for 2022]

(1) The building must be located not less than 10 m from any allotment boundary or open carparking area/spots.

(2) The separation distance *required* by (1) need not be complied with if the building is constructed—

(a) with *external walls* that have an FRL of not less than 60/60/60 when tested from the outside, including any openings protected in accordance with AS 3959 for BAL—19 or greater; or

(b) for *external walls* and roof, using a material or system that satisfies the test criteria of AS 1530.8.1 for a radiant heat flux of 10 kW/m² or greater.

S43C5 Separation from hazards

[New for 2022]

The *external walls* and roof of the building must be protected from potential hazards on the *site* such as liquefied petroleum gas bottles, fuel storage, storage of *combustible* materials, waste bins, vehicles, machinery, and the like, by—

(a) a separation distance of not less than 10 m; or

(b) where within the 10 m separation distance described in (a), constructed with *external walls* that have an FRL of not less than 60/60/60 when tested from the outside, including any openings protected in accordance with AS 3959 for BAL—19 or greater; or

(c) for *external walls* and roof, using a material or system that satisfies the test criteria of AS 1530.8.1 for a radiant heat flux of 10 kW/m² or greater.

S43C6 Non-combustible path around building

[New for 2022]

A *non-combustible* pathway directly adjacent to the building and not less than 1.5 m wide must be provided around the perimeter of the building.

S43C7 Access pathways

[New for 2022]

(1) Access pathways that lead to a road or *open space* must—

(a) be readily identifiable; and

(b) have an even surface; and

(c) have a minimum clear width of not less than 1 m.

(2) If the access pathway is an *accessway* that is *required* to comply with Part D4, the requirements of Part D4 override (1) to the extent of any inconsistency.

S43C8 Exposed external areas

[New for 2022]

An external area designed to hold people unable to be safely accommodated within the building, that may be exposed to radiant heat flux from a fire front during a bushfire event, must not be exposed to an incident radiant heat flux from the fire front exceeding 1 kW/m^2 above background solar radiant heat flux.

S43C9 Internal tenability

[New for 2022]

To maintain internal tenability throughout the duration of occupancy during a bushfire event, the building must comply with the following:

(a) An air handling system must be provided that is capable of—

(i) being adjusted for full recycling of internal air for a period of not less than 4 hours to avoid the introduction of smoke into the building; and

(ii) maintaining an internal air temperature of not more than 25°C.

(b) The building envelope must be designed such that if an air handling system *required* by (a) fails, then—

(i) internal air temperatures can be maintained below 39°C; and

(ii) internal surface temperatures can be maintained below 60°C.

(c) If the building is divided into separate compartments then, for the purposes of (a), each compartment must have a separate air handling system.

(d) Each air handling system *required* by (a) must be designed to account for the activation of smoke detectors from low concentrations of smoke from external sources, so as to ensure that air-conditioning and other essential systems remain operational.

S43C10 Building envelope

[New for 2022]

The building envelope must be constructed in accordance with AS 3959 – BAL 19 or greater, except that where the use of *combustible* materials is permitted by AS 3959, they are not to be used unless permitted by C2D10(4), (5) or (6).

NSW S43C11

S43C11 Supply of water for fire-fighting purposes

[New for 2022]

Water for fire-fighting purposes must be available and consist of—

(a) a fire hydrant system complying with E1D2, or

(b) a static water supply consisting of tanks, *swimming pools*, dams or the like, or a combination of these, together with suitable pumps, hoses and fittings, capable of providing the required flow rate for a period of not less than 4 hours, determined in consultation with the relevant *fire brigade*.

S43C12 Emergency power supply

[New for 2022]

(1) Emergency power must be provided to support, for not less than 4 hours before and 2 hours after the passing of the fire front during a bushfire event, the ongoing operation of—

(a) air handling systems to maintain internal tenability; and

(b) any pumps for fire-fighting; and

(c) any emergency lighting and *exit* signs; and

(d) any other emergency equipment listed in C3D14(6) and *required* to be provided.

(2) Manual control for emergency back-up power supply must be provided to facilitate manual intervention where the power supply fails or runs out.

S43C13 Signage

[New for 2022]

Signage must be provided to warn building occupants against storing combustible materials under or adjacent to the building.

S43C14 Vehicular access

[New for 2022]

Vehicular access to the building must be provided in accordance C3D5(2), as if the building were a large isolated building for the purposes of C3D4.

Section I Special use buildings

Part I1 Class 9b buildings

Deemed-to-Satisfy Provisions

I1D1	Application of Part
I1D2	Separation
I1D3	Proscenium wall construction
I1D4	Seating area
I1D5	Exits from stages
I1D6	Access to platforms and lofts
I1D7	Aisle lights

Part I2 Public transport buildings

Deemed-to-Satisfy Provisions

I2D1	Application of Part
I2D2	Accessways
I2D3	Ramps
I2D4	Handrails and grabrails
I2D5	Doorways and doors
I2D6	Lifts
I2D7	Stairways
I2D8	Unisex accessible toilet
I2D9	Location of accessible toilets
I2D10	Symbols and signs
I2D11	Tactile ground surface indicators
I2D12	Lighting
I2D13	Hearing augmentation
I2D14	Emergency warning systems
I2D15	Controls

Part I3 Farm buildings and farm sheds

Deemed-to-Satisfy Provisions

I3D1	Application of Part
I3D2	Fire resistance and separation
I3D3	Provision for escape
I3D4	Construction of exits
I3D5	Fixed platforms, walkways, stairways and ladders
I3D6	Thresholds
I3D7	Swinging doors
I3D8	Fire fighting equipment
I3D9	Fire hydrants and water supplies
I3D10	Fire hose reels
I3D11	Portable fire extinguishers
I3D12	Emergency lighting requirements
I3D13	Exit signs
I3D14	Direction signs

	I3D15	Design and operation of exit signs
	I3D16	Sanitary facilities
	I3D17	Height of rooms and other spaces
	I3D18	Artificial lighting
Specification 32	**Construction of proscenium walls**	
	S32C1	Scope
	S32C2	Separation of stage areas, etc
	S32C3	Proscenium wall construction
	S32C4	Combustible materials not to cross proscenium wall
	S32C5	Protection of openings in proscenium wall
	S32C6	Proscenium curtains

Part I1 Class 9b buildings

Introduction to this Part

This Part provides additional *Deemed-to-Satisfy Provisions* for certain types of Class 9b buildings where large numbers of people assemble and which contain a *stage* and *backstage* area.

Deemed-to-Satisfy Provisions

NSW I1D1

I1D1 Application of Part

[2019: H1.1]

(1) The *Deemed-to-Satisfy Provisions* of this Part apply to every enclosed Class 9b building or part of a building which—

(a) is a *school* assembly, church or community hall with a *stage* and any *backstage* area with a total *floor area* of more than 300 m^2; or

(b) otherwise, has a *stage* and any *backstage* area with a total *floor area* of more than 200 m^2; or

(c) has a *stage* with an associated rigging loft.

(2) Notwithstanding (1)—

(a) I1D4 applies to every open or enclosed Class 9b building; and

(b) I1D7 applies to every enclosed Class 9b building.

Explanatory Information

Part I1 contains *Deemed-to-Satisfy Provisions* additional to those contained in Sections C, D and E for Class 9b buildings.

I1D2 Separation

[2019: H1.2]

A theatre, public hall or the like must—

(a) have a sprinkler system (other than a FPAA101D or FPAA101H system) complying with Specification 17; or

(b) have the *stage*, *backstage* area and accessible under *stage* area separated from the audience by a proscenium wall in accordance with I1D3.

I1D3 Proscenium wall construction

[2019: H1.3]

A proscenium wall must comply with Specification 32.

I1D4 Seating area

[2019: H1.4]

In a seating area—

(a) the gradient of the floor surface must not be steeper than 1 in 8, or the floor must be stepped so that—

(i) a line joining the nosings of consecutive steps does not exceed an angle of 30° to the horizontal; and

(ii) the height of each step in the stepped floor is not more than 600 mm; and

(iii) the height of any opening in such a step is not more than 125 mm; and

(b) if an aisle divides the stepped floor and the difference in level between any 2 consecutive steps—

(i) exceeds 230 mm but not 400 mm — an intermediate step must be provided in the aisle; and

(ii) exceeds 400 mm — 2 equally spaced intermediate steps must be provided in the aisle; and

(iii) the going of intermediate steps must be not less than 270 mm and such as to provide as nearly as practicable equal treads throughout the length of the aisle; and

(c) the clearance between rows of fixed seats used for viewing performing arts, sport or recreational activities must be not less than—

(i) 300 mm if the distance to an aisle is not more than 3.5 m; or

(ii) 500 mm if the distance to an aisle is more than 3.5 m.

I1D5 Exits from stages

[2019: H1.5]

(1) The path of travel to an *exit* from a *stage* or performing area must not pass through the proscenium wall if the *stage* area is separated from the audience area with a proscenium wall.

(2) *Required exits* from *backstage* and under-*stage* areas must be independent of those provided for the audience area.

I1D6 Access to platforms and lofts

[2019: H1.6]

A stairway that provides access to a service platform, rigging loft, or the like, must comply with AS 1657.

I1D7 Aisle lights

[2019: H1.7]

In every enclosed Class 9b building, where in any part of the auditorium, the general lighting is dimmed or extinguished during public occupation and the floor is stepped or is inclined at a slope steeper than 1 in 12, aisle lights must be provided to illuminate the full length of the aisle and tread of each step.

Part I2 Public transport buildings

Introduction to this Part

This Part provides additional *Deemed-to-Satisfy Provisions* for Class 9b and Class 10 buildings that are used as public transport buildings. The provisions of this Part are based on the Disability Standards for Accessible Public Transport 2002 (Transport Standards).

Deemed-to-Satisfy Provisions

I2D1 Application of Part

[2019: H2.1]

(1) The *Deemed-to-Satisfy Provisions* of this Part apply to the passenger use areas of a Class 9b or Class 10 building used for public transport.

(2) The *Deemed-to-Satisfy Provisions* of this Part take precedence where there is a difference to the *Deemed-to-Satisfy Provisions* of Parts D4, E3 and F4.

(3) For an airport that does not accept regular public transport services, as defined in the Disability Standards for Accessible Public Transport 2002, only I2D8, I2D9, I2D10, I2D11, and I2D13 of this Part apply.

(4) Exemption (1) to A6G1(1) does not apply to this Part.

Explanatory Information

Part I2 contains *Deemed-to-Satisfy Provisions* for Class 9b and Class 10 public transport buildings additional to those contained in Parts D4, E3 and F4 that apply to public transport buildings.

I2D2 Accessways

[2019: H2.2]

(1) An *accessway* must comply with AS 1428.2.

(2) If an *accessway* branches into 2 or more parallel tracks—

(a) the ends of each track must be on the main pedestrian traffic routes; and

(b) the parallel tracks must have equal convenience and be located as close as practicable to the main pedestrian branch.

(3) The minimum unobstructed width of an *accessway* must be 1.2 m, except that—

(a) the minimum unobstructed width of a moving walkway forming part of an *accessway* may be not less than 850 mm; and

(b) the minimum unobstructed width of a doorway in an *accessway* may be not less than 850 mm.

(4) Poles, columns, stanchions, bollards and fixtures must not project into an *accessway*.

(5) Obstacles that abut an *accessway* must have a *luminance contrast* with a background of not less than 30%.

(6) Manoeuvring areas that allow a 180 degree wheelchair turn must comply with clause 6.2 of AS 1428.2.

(7) A passing area must be provided at least every 6 m along any two-way *accessway* that is less than 1800 mm wide.

(8) Ground and floor surfaces must comply with clause 9 of AS 1428.2 and AS 1428.1 Supplement 1 provides criteria for the selection of floor surfaces.

(9) The requirements of D4D4(c)(ii) do not apply to Class 9b or Class 10 public transport buildings.

I2D3 Ramps

[2019: H2.3]

(1) A ramp forming part of an *accessway* must comply with clause 8 of AS 1428.2.

(2) The requirements of D4D12(a) do not apply to Class 9b or Class 10 public transport buildings.

I2D4 Handrails and grabrails

[2019: H2.4]

(1) A handrail must comply with clause 10.1 of AS 1428.2.

(2) Handrails must be placed along an *accessway* wherever passengers are likely to require additional support or passive guidance.

(3) A grabrail must comply with clause 10.2 of AS 1428.2.

(4) A grabrail or handrail must be provided at fixed locations where passengers are required to pay fares.

I2D5 Doorways and doors

[2019: H2.5]

Doorways and doors must comply with clause 11 (except clause 11.5.2) of AS 1428.2.

I2D6 Lifts

[2019: H2.6]

Lift facilities must comply with AS 1735.12.

I2D7 Stairways

[2019: H2.7]

Stairs must comply with—

(a) clause 9.1 of AS 1428.1, including the notes; and

(b) clause 9.2 of AS 1428.1; and

(c) clauses 13.2, 13.3 and Figures 8 and 9 of AS 1428.2.

I2D8 Unisex accessible toilet

[2019: H2.8]

If toilets are provided, there must be at least one unisex *accessible* toilet without an airlock that complies with AS 1428.1 clause 10, sanitary facilities.

I2D9 Location of accessible toilets

[2019: H2.9]

Accessible toilets must be in the same location as other toilets.

I2D10 Symbols and signs

[2019: H2.10]

(1) The international symbols for accessibility and deafness in accordance with clauses 14.2 and 14.3 of AS 1428.1 must be used to identify an *accessway* and which facilities and boarding points are *accessible*.

(2) Signs must be placed in accordance with clause 17.4 of AS 1428.2.

(3) The size of accessibility symbols must comply with Table 1 of AS 1428.2.

(4) The symbol for accessibility must incorporate directional arrows and words or, if possible, pictograms, to show passengers the way to *accessible* facilities such as toilets.

(5) Signs must comply with clause 17.1 and Figure 30 of AS 1428.2.

(6) If a sign incorporates raised lettering or symbols, they must be at least 0.8 mm above the surface of the sign.

(7) If an operator or provider supplements a notice with braille characters, they must be placed to the left of the raised characters.

I2D11 Tactile ground surface indicators

[2019: H2.11]

Tactile ground surface indicators must be installed in accordance with AS 1428.4 on an *accessway* and must indicate changes of direction in accordance with clause 18.1 of AS 1428.2.

I2D12 Lighting

[2019: H2.12]

Any lighting provided must comply with minimum levels of maintenance illumination for various situations shown in the notes to clause 19.1 of AS 1428.2.

I2D13 Hearing augmentation

[2019: H2.13]

If a public address system is installed, it must comply with clause 21.1 of AS 1428.2.

I2D14 Emergency warning systems

[2019: H2.14]

(1) If an emergency warning system is installed, it must comply with clauses 18.2.1, 18.2.2 and 18.2.3 of AS 1428.2.

(2) In the event of an emergency, provision must be made for people with vision impairment to locate the *exit* path.

I2D15 Controls

[2019: H2.15]

Controls must comply with clause 11 of AS 1428.1.

Part I3 Farm buildings and farm sheds

SA Part I3

Introduction to this Part

This Part provides additional *Deemed-to-Satisfy Provisions* for Class 7 and Class 8 buildings which are *farm buildings* or *farm sheds*.

Deemed-to-Satisfy Provisions

I3D1 Application of Part

[2019: H3.1]

(1) The *Deemed-to-Satisfy Provisions* of this Part apply to *farm buildings* and *farm sheds*.

(2) The *Deemed-to-Satisfy Provisions* of this Part take precedence where there is a difference to the *Deemed-to-Satisfy Provisions* of Sections C, D, E, and F.

(3) I3D1 to I3D5, I3D8 and I3D11 to I3D18 apply to a *farm shed*.

(4) I3D1, I3D3, I3D5 to I3D7, I3D9 to I3D12, I3D14, I3D15 and I3D18 apply to a *farm building*.

Explanatory Information

Part I3 contains *Deemed-to-Satisfy Provisions* additional to those contained in Sections C, D, E and F for *farm buildings* and *farm sheds*.

I3D2 Fire resistance and separation

[2019: H3.2]

A *farm shed* need not comply with the provisions of Parts C2, C3 and C4, except for C2D12, if it is separated from any other building or allotment boundary by a distance of not less than 6 m.

I3D3 Provision for escape

[2019: H3.3]

(1) Except for D2D3, D2D5 to D2D11, D2D14, D2D15(1), D2D18(c), D2D19 and D2D20, the *Deemed-to-Satisfy Provisions* of Part D2 do not apply to a *farm shed*.

(2) An *open space* adjacent to a *farm building* or a *farm shed* need not be directly connected with a public road.

I3D4 Construction of exits

[2019: H3.4]

Except for D3D14, D3D15, D3D17 to D3D21, D3D22 and D3D29, the *Deemed-to-Satisfy Provisions* of Part D3 do not apply to a *farm shed*.

I3D5 Fixed platforms, walkways, stairways and ladders

[2019: H3.5]

A fixed platform, stairway, ladder and any going and riser, landing, handrail or barrier may comply with AS 1657 in lieu of D3D14, D3D15, D3D17 to D3D21 and D3D22 where it serves a *farm building* or a *farm shed*.

I3D6 Thresholds

[2019: H3.6]

The threshold of a doorway that serves an area not *required* to be *accessible* by D4D2 in a *farm building* need not comply with D3D16 where the door sill is not more than 700 mm above the finished surface of the ground, floor or the like, to which the doorway opens.

I3D7 Swinging doors

[2019: H3.7]

A swinging door in a *required exit* or forming part of a *required exit* need not swing in the direction of egress if it serves a *farm building*.

I3D8 Fire fighting equipment

[2019: H3.8]

The *Deemed-to-Satisfy Provisions* of Part E1 do not apply to a *farm shed*.

I3D9 Fire hydrants and water supplies

[2019: H3.9]

(1) This provision applies to a *farm building*—

(a) with a total *floor area* greater than 500 m^2; and

(b) located where a *fire brigade station* is—

(i) not more than 50 km from the building as measured along roads; and

(ii) equipped with equipment capable of utilising a fire hydrant.

(2) A *farm building* referred to in (1) must be—

(a) provided with a fire hydrant system installed in accordance with AS 2419.1, except reference to '4 hours' water supply in clause 4.2 is replaced with '2 hours'; or

(b) located on the same allotment as an access point to a water supply which—

(i) has a minimum total capacity of 144,000 litres; and

(ii) is situated so as to enable emergency services vehicles access to within 4 m; and

(iii) is located within 60 m of the building and not more than 90 m from any part of the building.

(3) For the purposes of (2)(b), water supply for a *farm building* must consist of one or any number of the following:

(a) A water storage tank.

(b) A dam.

(c) A reservoir.

(d) A river.

(e) A lake.

(f) A bore.

(g) A sea.

(4) If the whole or part of the water supply referred to in (2)(b) is contained in a water storage tank, it must be—

(a) located not less than 10 m from the building; and

(b) fitted with at least one small bore suction connection and one large bore suction connection where—

(i) each suction connection is located in a position so as to enable emergency service vehicles access to within 4 m; and

(ii) the suction connections are located not less than 10 m from the building; and

(iii) 'small bore suction connection' and 'large bore suction connection' have the meanings contained in AS 2419.1.

I3D10 Fire hose reels

[2019: H3.10]

A fire hose reel system need not be provided to serve a *farm building* where portable fire extinguishers are installed in accordance with I3D11.

I3D11 Portable fire extinguishers

[2019: H3.11]

(1) A *farm building* not provided with a fire hose reel system in accordance with E1D3 must be provided with—

(a) one portable fire extinguisher rated at not less than 5ABE in each room containing flammable materials or electrical equipment; and

(b) one portable fire extinguisher rated at not less than 4A60BE adjacent to every *required exit* door; and

(c) location signs complying with clauses 3.3 to 3.9 of AS 2444 above each *required* portable fire extinguisher.

(2) A *farm shed* must be provided with not less than one portable fire extinguisher for every 500 m^2 of *floor area* or part thereof, distributed as evenly as practicable throughout the building.

(3) A portable fire extinguisher *required* by (2) must be—

(a) of ABE type; and

(b) not less than 4.5 kg in size; and

(c) installed in accordance with Section 3 of AS 2444.

I3D12 Emergency lighting requirements

[2019: H3.12]

(1) An emergency lighting system need not be installed in a *farm building*—

(a) with no artificial lighting as permitted by I3D18; or

(b) with artificial lighting where, if that lighting fails due to an emergency, automatic power supply to the building is provided by a fuel-driven generator.

(2) An emergency lighting system need not be installed in a *farm shed*.

I3D13 Exit signs

[2019: H3.13]

An *exit* serving a *farm shed* need not be provided with an *exit* sign where the *exit* is a permanent opening not less than 2 m wide.

I3D14 Direction signs

[2019: H3.14]

In a *farm building* or a *farm shed*, if an *exit* is not readily apparent to persons occupying or visiting the building, *exit* signs complying with I3D15 must be installed in appropriate positions in corridors, hallways, lobbies and the like, indicating the direction to a *required exit*.

I3D15 Design and operation of exit signs

[2019: H3.15]

(1) In a *farm building*, each *required exit* sign provided under E4D5 and I3D14 need not comply with E4D8 if—

(a) the use of illuminated *exit* signs may adversely impact the behaviour or welfare of animals being kept in the building; and

(b) non-illuminated *exit* signs are installed in accordance with the requirements of Appendix D of AS/NZS 2293.1 as for an externally illuminated *exit* sign, and clauses 5.6 and 5.8 of AS/NZS 2293.1.

(2) In a *farm shed*, each *required exit* sign provided under E4D5 and I3D14 need not comply with E4D8 if—

(a) non-illuminated *exit* signs are installed in accordance with the requirements of Appendix D of AS/NZS 2293.1 as for an externally illuminated *exit* sign, and clauses 5.6 and 5.8 of AS/NZS 2293.1; and

(b) the maximum viewing distance in clause 5.6 of AS/NZS 2293.1 is not more than 24 m.

I3D16 Sanitary facilities

[2019: H3.16]

F4D4 does not apply to a *farm shed*.

I3D17 Height of rooms and other spaces

[2019: H3.17]

F5D2 does not apply to a *farm shed* which has ceiling heights not less than—

(a) in a room, corridor, passageway or the like — 2.1 m; and

(b) in a room or space with a sloping ceiling or projections — a height of not less than 2.1 m for at least two-thirds of the *floor area* of the room or space, and when calculating the *floor area* of the room or space, any part that has a ceiling height of less than 1.5 m is not included; and

(c) in a stairway, ramp, landing or the like — 2.0 m measured vertically above the nosing line of stairway treads or the floor surface of the ramp, landing or the like.

I3D18 Artificial lighting

[2019: H3.18]

(1) An artificial lighting system need not be provided in a *farm building* where—

(a) occupants are provided with visibility sufficient for safe movement through suitable alternative means; and

(b) the use of artificial lighting could adversely affect the function of the building including, but not limited to—

(i) the behaviour or welfare of animals being kept in the building; or

(ii) the cultivating or propagating of plants or fungi.

(2) An artificial lighting system need not be provided in a *farm shed*.

Specification 32 Construction of proscenium walls

S32C1 Scope

[2019: Spec H1.3: 1]

This Specification contains the requirements for the construction of proscenium walls for theatres, public halls, or the like.

S32C2 Separation of stage areas, etc

[2019: Spec H1.3: 2]

(1) Dressing rooms, scene docks, property rooms, workshops, associated store rooms and other ancillary areas must be—

(a) located on the *stage* side of the proscenium wall; and

(b) separated from corridors and the like by construction having an FRL of not less than 60/60/60, and if of *lightweight construction*, complying with Specification 6.

(2) The *stage* and *backstage* must be separated from other parts of the building other than the audience seating area by construction having an FRL of not less than 60/60/60, and if of *lightweight construction*, complying with Specification 6.

(3) Any doorway in the construction referred to in (1) and (2) must be protected by a *self-closing* –/60/30 fire door.

S32C3 Proscenium wall construction

[2019: Spec H1.3: 3]

A proscenium wall must—

(a) extend to the underside of the roof covering or the underside of the structural floor next above; and

(b) have an FRL of not less than 60/60/60, and if of *lightweight construction*, comply with Specification 6.

S32C4 Combustible materials not to cross proscenium wall

[2019: Spec H1.3: 4]

Timber purlins or other *combustible* material must not pass through or cross any proscenium wall.

S32C5 Protection of openings in proscenium wall

[2019: Spec H1.3: 5]

Every opening in a proscenium wall must be protected—

(a) at the principal opening, by a curtain in accordance with S32C6 which is—

(i) capable of closing the proscenium opening within 35 seconds either by gravity slide or motor assisted mechanisms; and

(ii) operated by a system of *automatic* heat activated devices, manually operated devices or push button emergency devices; and

(iii) able to be operated from either the *stage* side or the audience side of the curtain; and

(b) at any doorway in the wall, by a *self-closing* –/60/30 fire door.

S32C6 Proscenium curtains

[2019: Spec H1.3: 6]

A curtain *required* by S32C5 must be—

(a) a fire safety curtain—

(i) made of *non-combustible* material; and

(ii) capable of withstanding a pressure differential of 0.5 kPa over its entire surface area; and

(iii) so fitted that when fully lowered it inhibits the penetration of smoke around the perimeter of the opening, from the *stage*; or

(b) a curtain—

(i) having *fire hazard properties* complying with Specification 7; and

(ii) protected by a deluge system of open sprinklers installed along the full width of the curtain.

Section J Energy efficiency

Part J1 Energy efficiency performance requirements

Objectives

J1O1 Objective

Functional Statements

J1F1 Energy efficiency

Performance Requirements

J1P1 Energy use

J1P2 Thermal performance of a sole-occupancy unit of a Class 2 building or a Class 4 part of a building

J1P3 Energy usage of a sole-occupancy unit of a Class 2 building or a Class 4 part of a building

J1P4 Renewable energy and electric vehicle charging

Verification Methods

J1V1 NABERS Energy

J1V2 Green Star

J1V3 Verification using a reference building

J1V4 Verification of building envelope sealing

J1V5 Verification using a reference building for a Class 2 sole-occupancy unit

Part J2 Energy efficiency

Deemed-to-Satisfy Provisions

J2D1 Deemed-to-Satisfy Provisions

J2D2 Application of Section J

Part J3 Elemental provisions for a sole-occupancy unit of a Class 2 building or a Class 4 part of a building

Deemed-to-Satisfy Provisions

J3D1 Deemed-to-Satisfy Provisions

J3D2 Application of Part

J3D3 Reducing heating and cooling loads of a sole-occupancy unit of a Class 2 building or a Class 4 part of a building using house energy rating software

J3D4 Ceiling fans in a sole-occupancy unit of a Class 2 building or a Class 4 part of a building

J3D5 Roof thermal breaks of a sole-occupancy unit of a Class 2 building or a Class 4 part of a building

J3D6 Wall thermal breaks of a sole-occupancy unit of a Class 2 building or a Class 4 part of a building

J3D7 Roofs and ceilings of a sole-occupancy unit of a Class 2 building or a Class 4 part of a building

J3D8 External walls of a sole-occupancy unit of a Class 2 building or a Class 4 part of a building

J3D9 Wall-glazing construction of a sole-occupancy unit of a Class 2 building or a Class 4 part of a building

J3D10	Floors of a sole-occupancy unit of a Class 2 building or a Class 4 part of a building
J3D11	External winter glazing of a sole-occupancy unit of a Class 2 building or a Class 4 part of a building
J3D12	External summer glazing of a sole-occupancy unit of a Class 2 building or a Class 4 part of a building
J3D13	Shading of a sole-occupancy unit of a Class 2 building or a Class 4 part of a building
J3D14	Net equivalent energy usage of a sole-occupancy unit of a Class 2 building or a Class 4 part of a building
J3D15	Net equivalent energy usage for a sole-occupancy unit of a Class 2 building or Class 4 part of building – home energy rating software

Part J4 **Building fabric**

Deemed-to-Satisfy Provisions

J4D1	Deemed-to-Satisfy Provisions
J4D2	Application of Part
J4D3	Thermal construction — general
J4D4	Roof and ceiling construction
J4D5	Roof lights
J4D6	Walls and glazing
J4D7	Floors

Part J5 **Building sealing**

Deemed-to-Satisfy Provisions

J5D1	Deemed-to-Satisfy Provisions
J5D2	Application of Part
J5D3	Chimneys and flues
J5D4	Roof lights
J5D5	Windows and doors
J5D6	Exhaust fans
J5D7	Construction of ceilings, walls and floors
J5D8	Evaporative coolers

Part J6 **Air-conditioning and ventilation**

Deemed-to-Satisfy Provisions

J6D1	Deemed-to-Satisfy Provisions
J6D2	Application of Part
J6D3	Air-conditioning system control
J6D4	Mechanical ventilation system control
J6D5	Fans and duct systems
J6D6	Ductwork insulation
J6D7	Ductwork sealing
J6D8	Pump systems
J6D9	Pipework insulation
J6D10	Space heating
J6D11	Refrigerant chillers
J6D12	Unitary air-conditioning equipment

	J6D13	Heat rejection equipment
Part J7	**Artificial lighting and power**	
	Deemed-to-Satisfy Provisions	
	J7D1	Deemed-to-Satisfy Provisions
	J7D2	Application of Part
	J7D3	Artificial lighting
	J7D4	Interior artificial lighting and power control
	J7D5	Interior decorative and display lighting
	J7D6	Exterior artificial lighting
	J7D7	Boiling water and chilled water storage units
	J7D8	Lifts
	J7D9	Escalators and moving walkways
Part J8	**Heated water supply and swimming pool and spa pool plant**	
	Deemed-to-Satisfy Provisions	
	J8D1	Deemed-to-Satisfy Provisions
	J8D2	Heated water supply
	J8D3	Swimming pool heating and pumping
	J8D4	Spa pool heating and pumping
Part J9	**Energy monitoring and on-site distributed energy resources**	
	Deemed-to-Satisfy Provisions	
	J9D1	Deemed-to-Satisfy Provisions
	J9D2	Application of Part
	J9D3	Facilities for energy monitoring
	J9D4	Facilities for electric vehicle charging equipment
	J9D5	Facilities for solar photovoltaic and battery systems
Specification 33	**Additional requirements**	
	S33C1	Scope
	S33C2	Additional requirements — general
	S33C3	Additional requirements — Green Star
Specification 34	**Modelling parameters for J1V3**	
	S34C1	Scope
	S34C2	Reference building
	S34C3	Proposed building and reference building
	S34C4	Services — proposed and reference building
Specification 35	**Modelling profiles for J1V3**	
	S35C1	Scope
	S35C2	Modelling profiles
Specification 36	**Material properties**	
	S36C1	Scope
	S36C2	Construction Deemed-to-Satisfy
Specification 37	**Calculation of U-Value and solar admittance**	
	S37C1	Scope
	S37C2	General
	S37C3	U-Value — Method 1 (Single Aspect)

	S37C4	U-Value — Method 2 (Multiple Aspects)
	S37C5	Solar admittance — Method 1 (Single Aspect)
	S37C6	Solar admittance — Method 2 (Multiple Aspects)
	S37C7	Shading
Specification 38	**Spandrel panel thermal performance**	
	S38C1	Scope
	S38C2	Spandrel panel R-Value: Calculation method 1
	S38C3	Spandrel panel R-Value: Calculation method 2
Specification 39	**Sub-floor and soil thermal performance**	
	S39C1	Scope
	S39C2	Sub-floor space and soil thermal performance
Specification 40	**Lighting and power control devices**	
	S40C1	Scope
	S40C2	Lighting timers
	S40C3	Time switch
	S40C4	Motion detectors
	S40C5	Daylight sensor and dynamic lighting control device
Specification 44	**Calculation of heating load limit, cooling load limit and thermal energy load limit**	
	S44C1	Scope
	S44C2	Heating load limit
	S44C3	Cooling load limit
	S44C4	Thermal energy load limit
Specification 45	**Modelling profiles for J1V5**	
	S45C1	Scope
	S45C2	Reference building sole-occupancy unit
	S45C3	Proposed building and reference building

Part J1 Energy efficiency performance requirements

NSW Part J1

NT Part J1

Introduction to this Part

This Part sets the thermal performance properties of building *fabric*, the energy efficiency of key energy using equipment and the features a building must have to facilitate the future installation of distributed energy resources.

Notes

From 1 May 2023 to 30 September 2023 Section J of NCC 2019 Volume One Amendment 1 may apply instead of Section J of NCC 2022 Volume One. From 1 October 2023 Section J of NCC 2022 Volume One applies.

Notes: Tasmania Section J Energy Efficiency

In Tasmania, for a Class 2 building and Class 4 part of a building, Section J is replaced with Section J of BCA 2019 Amendment 1.

Objectives

J1O1 Objective

[2019: JO1]

The Objective of this Section is to—

(a) reduce energy consumption and energy peak demand; and

(b) reduce greenhouse gas emissions; and

(c) improve occupant health and *amenity*.

Functional Statements

J1F1 Energy efficiency

[2019: JF1]

A building must—

(a) reduce the energy consumption and energy peak demand of key energy using equipment; and

(b) reduce the greenhouse gas emissions that occur as a result of a building's energy consumption and energy source; and

(c) for a *sole-occupancy unit* of a Class 2 building or a Class 4 part of a building, improve occupant health and *amenity* by mitigating the impact of extreme hot and cold weather events and energy blackouts; and

(d) for other than in a *sole-occupancy unit* of a Class 2 building or a Class 4 part of a building, protect occupant health and *amenity* by ensuring the building *envelope* assists in the maintenance of acceptable internal conditions while the building is occupied; and

(e) be able to accommodate the future installation of distributed energy resources.

Performance Requirements

J1P1 Energy use

[2019: JP1]

A building, other than a *sole-occupancy unit* of a Class 2 building or a Class 4 part of a building, including its *services*, must have features that facilitate the efficient use of energy appropriate to—

(a) the function and use of the building; and

(b) the level of human comfort required for the building use; and

(c) solar radiation being—

(i) utilised for heating; and

(ii) controlled to minimise energy for cooling; and

(d) the energy source of the *services*; and

(e) the sealing of the building *envelope* against air leakage; and

(f) for a *conditioned space*, achieving an hourly *regulated energy* consumption, averaged over the annual *hours of operation*, of not more than—

(i) for a Class 6 building, 80 kJ/m².hr; and

(ii) for a Class 5, 7b, 8 or 9a building other than a *ward area*, or a Class 9b *school*, 43 kJ/m².hr; and

(iii) for all other building classifications, 15 kJ/m².hr.

NSW J1P2

J1P2 Thermal performance of a sole-occupancy unit of a Class 2 building or a Class 4 part of a building

[New for 2022]

(1) The total *heating load* of the *habitable rooms* and *conditioned spaces* in a *sole-occupancy unit* of a Class 2 building or a Class 4 part of a building must not exceed the *heating load* limit in Specification 44.

(2) The total *cooling load* of the *habitable rooms* and *conditioned spaces* in a *sole-occupancy unit* of a Class 2 building or a Class 4 part of a building must not exceed the *cooling load* limit in Specification 44.

(3) The total *thermal energy load* of the *habitable rooms* and *conditioned spaces* in a *sole-occupancy unit* of a Class 2 building or a Class 4 part of a building must not exceed the *thermal energy load* limit in Specification 44.

NSW J1P3

J1P3 Energy usage of a sole-occupancy unit of a Class 2 building or a Class 4 part of a building

[New for 2022]

(1) The *energy value* of the *domestic services* of a *sole-occupancy unit* of a Class 2 building or Class 4 part of a building must not exceed the *energy value* with—

(a) a 3-star ducted heat pump, rated under the 2019 GEMS determination, heating all spaces that are provided with heating; and

(b) a 3-star ducted heat pump, rated under the 2019 GEMS determination, cooling all spaces that are provided with cooling; and

(c) a 5-star instantaneous gas water heater, rated under the 2017 GEMS determination, providing all domestic hot water; and

(d) a lighting power density of 4 W/m^2 serving all internal spaces that are provided with artificial lighting.

(2) *Domestic services*, including any associated distribution system and components must, to the degree necessary,

have features that facilitate the efficient use of energy appropriate to—

(a) the *domestic service* and its usage; and

(b) the geographic location of the building; and

(c) the location of the *domestic service*; and

(d) the energy source.

J1P4 Renewable energy and electric vehicle charging

[New for 2022]

A building must have features that facilitate the future installation of on-site renewable energy generation and storage and electric vehicle charging equipment.

Verification Methods

J1V1 NABERS Energy

[2019: JV1]

(1) For a Class 5 building, compliance with J1P1 is verified when—

(a) a minimum 5.5-star *NABERS Energy* base building Commitment Agreement is obtained; and

(b) the energy model required for (a) demonstrates—

(i) the base building's greenhouse gas emissions are not more than 67% of the 5.5-star level when excluding—

(A) tenant supplementary heating and cooling systems; and

(B) external lighting; and

(C) *carpark services*; and

(ii) a *thermal comfort level* of between a *Predicted Mean Vote* of -1 to +1 is achieved across not less than 95% of the *floor area* of all occupied zones for not less than 98% of the annual *hours of operation* of the building; and

(c) the building complies with the additional requirements in Specification 33.

(2) For a Class 2 building, other than *sole-occupancy units*, compliance with J1P1 is verified when—

(a) a minimum 4-star *NABERS Energy* for Apartment Buildings Commitment Agreement is obtained; and

(b) *air-conditioning*, which operates not less than 18 hours per day, is provided to all enclosed common lift lobbies and corridors; and

(c) the energy model *required* for (a) demonstrates—

(i) the greenhouse gas emissions of the *services* are less than 90% of the 5-star level; and

(ii) a *thermal comfort level* of between a *Predicted Mean Vote* of -1 to +1 is achieved across not less than 95% of the *floor area* of the *air-conditioned* common area occupied zones, excluding indoor *swimming pool* chambers, for not less than 98% of the annual *hours of operation* of the building; and

(iii) the space temperature in any indoor *swimming pool* chamber is maintained at 2°C above the pool temperature during occupied hours of not less than 12 hours per day; and

(d) the building complies with the additional requirements in Specification 33.

(3) For a Class 3 building, compliance with J1P1 is verified when—

(a) a minimum 4-star *NABERS Energy* for Hotels Commitment Agreement is obtained; and

(b) the operating hours of the *services* are not less than 12 hours per day in bedrooms, dining rooms and conference facilities, 24 hours per day in corridors and foyers and 18 hours per day in back-of-house areas; and

(c) the energy model *required* for (a) demonstrates that—

(i) the greenhouse gas emissions of the *services* are less than 70% of the 5-star level; and

(ii) a *thermal comfort level* of between a *Predicted Mean Vote* of -1 to +1 is achieved across not less than 95% of the *floor area* of occupied zones, excluding indoor *swimming pool* chambers, for not less than 98% of the annual *hours of operation* of the building; and

(iii) the space temperature in any indoor *swimming pool* chamber is maintained at 2°C above the pool temperature during occupied hours of not less than 12 hours per day; and

(d) the building complies with the additional requirements in Specification 33.

(4) For a Class 6 shopping centre, compliance with J1P1 is verified when—

(a) a minimum 4.5-stars *NABERS Energy* for Shopping Centres Commitment Agreement is obtained; and

(b) the building has:

(i) an *air-conditioned* common area of not less than 20% of the gross lettable area; and

(ii) a gross lettable area greater than 15 000 m^2; and

(c) the energy model *required* for (a) demonstrates—

(i) the greenhouse gas emissions of the *services* covered within the scope of *NABERS Energy* for Shopping Centres ratings are less than 80% of the 4.5-star level; and

(ii) a *thermal comfort level* of between a *Predicted Mean Vote* of -1 to +1 is achieved across not less than 95% of the *floor area* of *air-conditioned* spaces within the scope of the rating for not less than 98% of the annual *hours of operation* the building; and

(d) the building complies with the additional requirements in Specification 33.

(5) The calculation method for (1), (2), (3) and (4) must comply with ANSI/ASHRAE Standard 140.

J1V2 Green Star

[2019: JV2]

(1) For a Class 3, 5, 6, 7, 8 or 9 building, or common area of a Class 2 building, compliance with J1P1 is verified when—

(a) the building complies with the simulation requirements, and is registered, for a *Green Star* – Design & As-Built or Green Star Buildings rating; and

(b) the *annual greenhouse gas emissions* of the proposed building are less than 90% of the *annual greenhouse gas emissions* of the *reference building*; and

(c) in the proposed building, a *thermal comfort level* of between a *Predicted Mean Vote* of -1 to +1 is achieved across not less than 95% of the *floor area* of all occupied zones for not less than 98% of the annual *hours of operation* of the building; and

(d) the building complies with the additional requirements in Specification 33.

(2) The calculation method used for (1) must comply with ANSI/ASHRAE Standard 140.

J1V3 Verification using a reference building

[2019: JV3]

(1) For a Class 3, 5, 6, 7, 8 or 9 building or common area of a Class 2 building, compliance with J1P1 is verified when—

(a) it is determined that the *annual greenhouse gas emissions* of the proposed building are not more than the *annual greenhouse gas emissions* of a *reference building* when—

(i) the proposed building is modelled with the proposed *services*; and

(ii) the proposed building is modelled with the same *services* as the *reference building*; and

(b) in the proposed building, a *thermal comfort level* of between a *Predicted Mean Vote* of -1 to +1 is achieved across not less than 95% of the *floor area* of all occupied zones for not less than 98% of the annual *hours of operation* of the building; and

(c) the building complies with the additional requirements in Specification 33.

(2) The *annual greenhouse gas emissions* of the proposed building may be offset by—

(a) *renewable energy* generated and used on *site*; and

(b) another process such as reclaimed energy, used on *site*.

(3) The calculation method used for (1) and (2) must comply with—

(a) ANSI/ASHRAE Standard 140; and

(b) Specification 34.

J1V4 Verification of building envelope sealing

[2019: JV4]

(1) Compliance with J1P1(e) and J1P2 is verified for building *envelope* sealing when the *envelope* is sealed at an air permeability rate, tested in accordance with Method 1 of AS/NZS ISO 9972, of not more than—

(a) for a Class 2 building or a Class 4 part of a building, 10 m³/hr.m² at 50 Pa reference pressure; or

(b) for a Class 5, 6, 8 or 9a or 9b building, other than a *ward area*, in *climate zones* 1, 7 and 8, 5 m³/hr.m² at 50 Pa reference pressure; or

(c) for a Class 3 or 9c building, or a Class 9a *ward area* in *climate zones* 1, 3, 4, 6, 7 and 8, 5 m³/hr.m² at 50 Pa reference pressure.

(2) In a *sole-occupancy unit* of a Class 2 building or a Class 4 part of a building, where an air permeability rate of not more than 5 $m^3/hr.m^2$ at 50 Pa reference pressure is achieved—

(a) a mechanical ventilation system must be provided that—

(i) can be manually overridden; and

(ii) provides outdoor air, either—

(A) continuously; or

(B) intermittently, where the system has controls that enable operation for not less than 25 per cent of each 4 hour segment; and

(iii) provides a flow rate not less than that achieved with the following formula: $Q = (0.05 \times A + 3.5 \times (N + 1))/p$, where—

(A) Q = the required air flow rate (L/s); and

(B) A = the total area of the *sole-occupancy unit* of a Class 2 or Class 4 part of a building (m^2); and

(C) N = the number of bedrooms in the *sole-occupancy unit* of a Class 2 or Class 4 part of a building; and

(D) p = the fraction of time within each 4 hour segment that the system is operational; and

(b) any space with a solid-fuel burning combustion appliance must be ventilated with permanent openings directly to outside with a free area of not less than half of the cross-sectional area of the appliance's flue; and

(c) any space with a gas-fueled combustion appliance must be ventilated in accordance with—

(i) clause 6.4 of AS/NZS 5601.1; and

(ii) clause 6.4.5 of AS/NZS 5601.1.

(3) For the purposes of (2)(c), the volume of the space is considered to be 1 m^3 for determining ventilation requirements.

NSW J1V5

J1V5 Verification using a reference building for a Class 2 sole-occupancy unit

[New for 2022]

(1) Compliance with J1P2 is verified when each Class 2 *sole-occupancy unit* of a proposed building—

(a) in *climate zones* 3, 4, 5, 6, 7 and 8, has a *heating load* less than or equal to—

(i) that of a *reference building*; and

(ii) 120% of J1P2(1); and

(b) in *climate zones* 1, 2, 3, 4 and 5, has a *cooling load* less than or equal to—

(i) that of a *reference building*; and

(ii) 120% of J1P2(2); and

(c) complies with the additional requirements in Specifications 33 and 45 as applicable.

(2) Compliance with J1P3 is determined when the *energy value* of the *domestic services*, including all centralised *domestic services* infrastructure, of a proposed building is less than that of a *reference building* when—

(a) each *sole-occupancy unit* of a *reference building* has—

(i) a 3-star ducted air-to-air heat pump, rated under the 2019 GEMS determination, heating all spaces that are provided with heating; and

(ii) a 3-star ducted heat pump, rated under the 2019 GEMS determination, cooling all spaces that are provided with cooling; and

(iii) a 5-star instantaneous gas water heater, rated under the 2017 GEMS determination, providing all domestic *heated water*; and

(iv) a lighting power density of 4 W/m^2 serving all internal spaces that are provided with artificial lighting; and

(b) the proposed building and a *reference building* comply with the additional requirements in Specifications 33 and 45 as applicable.

(3) The calculation method used for (1) and (2) must—

(a) comply with ANSI/ASHRAE Standard 140; and

(b) not be *house energy rating software*.

Part J2 Energy efficiency

NT Part J2

Introduction to this Part

This Part sets out the application of the *Deemed-to-Satisfy Provisions* in Parts J3 to J9.

Notes

From 1 May 2023 to 30 September 2023 Section J of NCC 2019 Volume One Amendment 1 may apply instead of Section J of NCC 2022 Volume One. From 1 October 2023 Section J of NCC 2022 Volume One applies.

Notes: New South Wales Section J Energy Efficiency

(1) For a Class 2 building or a Class 4 part of a building, where a relevant *development consent* or an application for a complying development certificate requires compliance with a BASIX Single Dwelling or Multi Dwelling Certificate issued under Version 3.0 or earlier, NSW Section J of NCC 2019 Volume One Amendment 1 applies.

(2) For a Class 2 building or a Class 4 part of a building, where a relevant *development consent* or an application for a complying development certificate requires compliance with a BASIX Single Dwelling or Multi Dwelling Certificate issued under Version 4.0 or later, Section J of NCC 2022 Volume One applies.

(3) For a Class 2 building or a Class 4 part of a building, where a relevant *development consent* or an application for a complying development certificate requires compliance with a BASIX Alterations and Additions Certificate, NSW Section J of NCC 2019 Volume One Amendment 1 applies.

(4) For a Class 3 building or Class 5 to 9 building:

(a) From 1 May 2023 to 30 September 2023 NSW Section J of NCC 2019 Volume One Amendment 1 may apply instead of Section J of NCC 2022 Volume One.

(b) From 1 October 2023 Section J of NCC 2022 Volume One applies.

Notes: Tasmania Section J Energy Efficiency

In Tasmania, for a Class 2 building and Class 4 part of a building, Section J is replaced with Section J of BCA 2019 Amendment 1.

Deemed-to-Satisfy Provisions

J2D1 Deemed-to-Satisfy Provisions

[2019: J0.0]

NSW J2D1(1)

(1) Where a *Deemed-to-Satisfy Solution* is proposed, *Performance Requirements* J1P1 to J1P4 are satisfied by complying with—

(a) J2D2; and

(b) J3D2 to J3D15; and

(c) J4D2 to J4D7; and

(d) J5D2 to J5D8; and

(e) J6D2 to J6D13; and

(f) J7D2 to J7D9; and

(g) J8D2 to J8D4; and

(h) J9D2 to J9D5.

(2) Where a *Performance Solution* is proposed, the relevant *Performance Requirements* must be determined in accordance with A2G2(3) and A2G4(3) as applicable.

NSW J2D2

J2D2 Application of Section J

[2019: J0.1]

(1) For a Class 2 to 9 building, other than a sole-occupancy unit of a Class 2 building or a Class 4 part of a building, *Performance Requirement* J1P1 is satisfied by complying with—

(a) Part J4, for the building *fabric*; and

(b) Part J5, for building sealing; and

(c) Part J6, for *air-conditioning* and ventilation; and

(d) Part J7, for artificial lighting and power; and

(e) Part J8, for heated water supply and *swimming pool* and spa pool plant; and

(f) J9D3, for facilities for energy monitoring.

(2) For a *sole-occupancy unit* of a Class 2 building or a Class 4 part of a building, *Performance Requirement* J1P2 is satisfied by complying with—

(a) J3D3, using *house energy rating software*; or

(b) the following—

(i) J3D4, for ceiling fans; and

(ii) J3D5, J3D6, J4D3, J4D7(3), J4D7(4) and Part J5, for general thermal construction; and

(iii) J3D7, for roofs; and

(iv) J3D8 and J3D11 to J3D13, or J3D9, for walls and *glazing*; and

(v) J3D10, for floors.

(3) For a *sole-occupancy unit* of a Class 2 building or a Class 4 part of a building, *Performance Requirement* J1P3 is satisfied by complying with—

(a) for the net equivalent energy usage—

(i) J3D14, for a *sole-occupancy unit* of a Class 2 building or a Class 4 part of a building with a total floor area not greater than 500 m^2; or

(ii) J3D15, using *house energy rating software*; and

(b) Part J6, for *air-conditioning* and ventilation; and

(c) Part J7, for artificial lighting and power.

(4) For a Class 2 to 9 building, *Performance Requirement* J1P4 is satisfied by complying with J9D4 and J9D5.

Part J3 Elemental provisions for a sole-occupancy unit of a Class 2 building or a Class 4 part of a building

NT Part J3

TAS Part J3

Introduction to this Part

This Part contains *Deemed-to-Satisfy Provisions* (elemental) for compliance with Part J1. It sets out provisions for the insulation of building *fabric* and the energy efficiency of *domestic services* of a *sole-occupancy unit* of a Class 2 building or a Class 4 part of a building.

Notes

From 1 May 2023 to 30 September 2023 Section J of NCC 2019 Volume One Amendment 1 may apply instead of Section J of NCC 2022 Volume One. From 1 October 2023 Section J of NCC 2022 Volume One applies.

Notes: New South Wales Section J Energy Efficiency

(1) For a Class 2 building or a Class 4 part of a building, where a relevant *development consent* or an application for a complying development certificate requires compliance with a BASIX Single Dwelling or Multi Dwelling Certificate issued under Version 3.0 or earlier, NSW Section J of NCC 2019 Volume One Amendment 1 applies.

(2) For a Class 2 building or a Class 4 part of a building, where a relevant *development consent* or an application for a complying development certificate requires compliance with a BASIX Single Dwelling or Multi Dwelling Certificate issued under Version 4.0 or later, Section J of NCC 2022 Volume One applies.

(3) For a Class 2 building or a Class 4 part of a building, where a relevant *development consent* or an application for a complying development certificate requires compliance with a BASIX Alterations and Additions Certificate, NSW Section J of NCC 2019 Volume One Amendment 1 applies.

Deemed-to-Satisfy Provisions

J3D1 Deemed-to-Satisfy Provisions

[New for 2022]

NSW J3D1(1)

(1) Where a *Deemed-to-Satisfy Solution* is proposed, *Performance Requirements* J1P1 to J1P4 are satisfied by complying with—

(a) J2D2; and

(b) J3D2 to J3D15; and

(c) J4D2 to J4D7; and

(d) J5D2 to J5D8; and

(e) J6D2 to J6D13; and

(f) J7D2 to J7D9; and

(g) J8D2 to J8D4; and

(h) J9D2 to J9D5.

(2) Where a *Performance Solution* is proposed, the relevant *Performance Requirements* must be determined in accordance with A2G2(3) and A2G4(3) as applicable.

NSW J3D2

J3D2 Application of Part

[New for 2022]

The *Deemed-to-Satisfy Provisions* of this Part apply to building elements forming the external building *fabric* and *domestic services* of a *sole-occupancy unit* of a Class 2 building and a Class 4 part of a building.

NSW J3D3

J3D3 Reducing heating and cooling loads of a sole-occupancy unit of a Class 2 building or a Class 4 part of a building using house energy rating software

[2019: J0.2]

(1) The *sole-occupancy units* of a Class 2 building or a Class 4 part of a building must—

(a) for reducing the heating or cooling loads—

(i) collectively achieve an average energy rating of not less than 7 stars, including the separate heating and cooling load limits; and

(ii) individually achieve an energy rating of not less than 6 stars, including the separate heating and cooling load limits; and

(b) for thermal breaks, comply with J3D5 and J3D6; and

(c) for compensating for a loss of ceiling insulation, other than where the *house energy rating software* has compensated for a loss of ceiling insulation, comply with Table J3D7w; and

(d) for general thermal construction, comply with J4D3; and

(e) for floor edge insulation, comply with J3D10(3), J3D10(5) and J3D10(6); and

(f) for building sealing, comply with Part J5.

(2) Energy ratings referred to in (1)(a)(i) and (ii) must be achieved using—

(a) *house energy rating software*; and

(b) the load limits specified in the ABCB Standard for NatHERS Heating and Cooling Load Limits.

NSW J3D4

J3D4 Ceiling fans in a sole-occupancy unit of a Class 2 building or a Class 4 part of a building

[2019: J0.3]

(1) Ceiling fans must be installed in accordance with Table J3D4 in—

(a) *climate zones* 1, 2 and 3; and

(b) *climate zone* 5 in New South Wales and Queensland.

(2) Ceiling fans *required* by (1) must—

(a) be permanently installed; and

(b) have a speed controller.

Table J3D4: Minimum ceiling fan requirements in climate zones 1, 2, 3 and 5

Size of room (m^2)	Minimum number and diameter (mm) of ceiling fans *required* for a bedroom in *climate zones* 1, 2 and 3	Minimum number and diameter (mm) of ceiling fans *required* in a *habitable room* other than a bedroom in *climate zones* 1, 2, 3 and 5 (NSW and Qld)
< 15	1 x 900	1 x 900

Size of room (m^2)	Minimum number and diameter (mm) of ceiling fans *required* for a bedroom in *climate zones* 1, 2 and 3	Minimum number and diameter (mm) of ceiling fans *required* in a *habitable room* other than a bedroom in *climate zones* 1, 2, 3 and 5 (NSW and Qld)
≥ 15 to < 20	1 x 1200	1 x 1200
≥ 20 to < 25	1 x 1200	1 x 1400
≥ 25 to < 30	1 x 1400	2 x 1200
≥ 30 to < 45	1 x 1400	2 x 1400
≥ 45 to < 50	2 x 1400	3 x 1200
≥ 50	2 x 1400	3 x 1400

J3D5 Roof thermal breaks of a sole-occupancy unit of a Class 2 building or a Class 4 part of a building

[2019: J0.4]

(1) A roof that—

(a) has metal sheet roofing directly fixed to metal purlins, metal rafters or metal battens; and

(b) does not have a ceiling lining or has a ceiling lining fixed directly to those metal purlins, metal rafters or metal battens,

must have a thermal break, consisting of a material with an *R-Value* of greater than or equal to R0.2, installed between the metal sheet roofing and its supporting metal purlins, metal rafters or metal battens.

(2) The requirements of (1) do not apply to roofs constructed using insulated sandwich panels.

J3D6 Wall thermal breaks of a sole-occupancy unit of a Class 2 building or a Class 4 part of a building

[2019: J0.5]

(1) A metal-framed wall that forms part of the building *envelope* must have a thermal break, consisting of a material with an *R-Value* of not less than R0.2, installed at all points of contact between the external cladding and the metal frame if the wall—

(a) does not have a wall lining or has a wall lining that is fixed directly to the same metal frame; and

(b) is clad with weatherboards, fibre-cement or the like, or metal sheeting fixed to a metal frame.

(2) The requirements of (1) do not apply to walls constructed using insulated sandwich panels.

NSW J3D7

J3D7 Roofs and ceilings of a sole-occupancy unit of a Class 2 building or a Class 4 part of a building

[New for 2022]

(1) Roof and ceiling insulation must achieve the minimum *R-Value*—

(a) in *climate zone* 1, in accordance with Tables J3D7a, J3D7b and J3D7c as applicable; and

(b) in *climate zone* 2, in accordance with Tables J3D7d, J3D7e and J3D7f as applicable; and

(c) in *climate zone* 3, in accordance with Tables J3D7g, J3D7h and J3D7i as applicable; and

(d) in *climate zone* 4, in accordance with Tables J3D7j, J3D7k and J3D7l as applicable; and

(e) in *climate zone* 5, in accordance with Tables J3D7m, J3D7n and J3D7o as applicable; and

(f) in *climate zone* 6—

(i) R3.5; or

(ii) if the roof contains *reflective insulation*, R3.0; and

(g) in *climate zones* 7 and 8, in accordance with Tables J3D7p, J3D7q and J3D7r as applicable.

(2) *Reflective insulation* installed to comply with (1) must—

(a) have a surface emittance of not more than 0.05; and

(b) be adjacent to a roof space of not less than 20 mm; and

(c) in *climate zones* 3 to 8, be downward facing.

(3) The thermal bridging in a metal-framed roof must be addressed as follows—

(a) for a pitched roof with a horizontal ceiling—

(i) achieving the *Total R-Value* in Table J3D7s, calculated using a method that accounts for the effects of thermal bridging; or

(ii) increasing the *R-Value* of the insulation between the ceiling frames by R0.5 more than the *R-Value* derived from (1); or

(iii) adding a continuous ceiling insulation layer with a minimum *R-Value* of R0.13 above or below the ceiling joists or the bottom chords of the trusses; or

(iv) achieving the *required* ceiling *R-Value* derived from (1) by stacking two layers of insulation immediately on top of each other, such that the top layer is orientated to cover the ceiling joists or bottom chord of the trusses and has an *R-Value* of at least R0.5; or

(b) for a flat, skillion or cathedral roof—

(i) achieving the *Total R-Value* in Table J3D7t, calculated using a method that accounts for the effects of thermal bridging; or

(ii) complying with Table J3D7u.

(4) Where F8D5(1) applies, continuous insulation placed above the *primary insulation layer* to mitigate thermal bridging must have a *vapour permeance* of not less than that of the *primary insulation layer*.

(5) Where, for operational or safety reasons, the area of ceiling insulation *required* is reduced, the loss of insulation must be compensated for in accordance with Table J3D7w.

(6) Where the ceiling insulation *required* by (1) to (5) has an *R-Value*—

(a) greater than R3.0 and less than or equal to R4.5, it may be reduced to R3.0 within 450 mm of an *external wall*; or

(b) greater than R4.5, it may be reduced to R3.0 within 450 mm of an *external wall*, provided all other *required* ceiling insulation is increased by R0.5.

(7) The requirements of (1) to (6) do not apply to roofs constructed using insulated sandwich panels.

(8) Roofs constructed using insulated sandwich panels must achieve the minimum *Total R-Value* in Table J3D7x.

(9) In *climate zones* 1 to 5, the solar absorptance of the upper surface of a roof must not be more than 0.64.

Table J3D7a: Flat concrete roof — minimum R-Value for ceiling insulation: climate zone 1

Reflective insulation under-roof	SA ≤ 0.23	SA > 0.23 to ≤ 0.32	SA > 0.32 to ≤ 0.42	SA > 0.42 to ≤ 0.53	SA > 0.53 to ≤ 0.64
Yes	1.0	1.5	2.0	2.5	3.0
No	1.5	2.0	2.5	3.0	4.0

Table Notes

(1) SA = solar absorptance.

(2) The *R-Value* of *reflective insulation* is not to be included in the *R-Value* of any under-roof or ceiling insulation.

(3) *R-Values* listed are for the labelled, declared *R-Value* of insulation.

Table J3D7b: Timber-framed pitched roof with horizontal ceiling — minimum R-Value for ceiling insulation: climate zone 1

Roof ventilation	*Reflective insulation* under-roof	Under-roof insulation *R-Value*	SA ≤ 0.23	SA > 0.23 to ≤ 0.32	SA > 0.32 to ≤ 0.42	SA > 0.42 to ≤ 0.53	SA > 0.53 to ≤ 0.64
Vented	Yes	< 1.0	1.5	1.5	1.5	1.5	2.0
		≥ 1.0 to < 1.5	1.5	1.5	1.5	1.5	1.5
		≥ 1.5 to < 2.0	1.5	1.5	1.5	1.5	1.5
		≥ 2.0	1.5	1.5	1.5	2.0	2.0
	No	< 1.0	2.0	2.5	4.0	5.0	X
		≥ 1.0 to < 1.5	1.5	1.5	1.5	1.5	2.5
		≥ 1.5 to < 2.0	1.5	1.5	1.5	2.0	2.0
		≥ 2.0	1.5	1.5	1.5	1.5	1.5
Standard	Yes	< 1.0	1.5	1.5	2.0	3.0	4.0
		≥ 1.0 to < 1.5	1.5	1.5	1.5	1.5	2.5
		≥ 1.5 to < 2.0	1.5	1.5	1.5	1.5	2.0
		≥ 2.0	1.5	1.5	1.5	1.5	1.5
	No	< 1.0	2.5	4.0	6.0	X	X
		≥ 1.0 to < 1.5	1.5	1.5	1.5	1.5	4.0
		≥ 1.5 to < 2.0	1.5	1.5	2.0	2.0	2.5
		≥ 2.0	1.5	1.5	1.5	2.0	2.5

Table Notes

(1) SA = solar absorptance.

(2) A roof space is to be considered 'vented' if it—

(a) has one wind-driven roof ventilator per 50 m^2 of ceiling area with gable, eave or ridge vents; or

(b) has one powered roof ventilator per 200 m^2 of ceiling area with gable, eave or ridge vents; or

(c) is a tiled roof without *sarking-type material* at roof level.

(3) If a roof is not 'vented', it is a 'standard' roof.

(4) The *R-Value* of *reflective insulation* is not to be included in the *R-Value* of any under-roof or ceiling insulation.

(5) *R-Values* listed are for the labelled, declared *R-Value* of insulation.

(6) X = not permitted.

Table J3D7c: Timber-framed flat, skillion or cathedral roof — minimum R-Value for ceiling insulation: climate zone 1

Reflective insulation under-roof	SA ≤ 0.23	SA > 0.23 to ≤ 0.32	SA > 0.32 to ≤ 0.42	SA > 0.42 to ≤ 0.53	SA > 0.53 to ≤ 0.64
Yes	1.5	1.5	2.0	3.0	4.0
No	1.5	3.5	5.0	X	X

Table Notes

(1) SA = solar absorptance.

(2) The *R-Value* can be achieved by installing insulation under the roof or on top of the ceiling or a combination of both.

(3) The *R-Value* of *reflective insulation* is not to be included in the *R-Value* of any under-roof or ceiling insulation.

(4) *R-Values* listed are for the labelled, declared *R-Value* of insulation.

(5) X = not permitted.

Table J3D7d: Flat concrete roof — minimum R-Value for ceiling insulation: climate zone 2

Reflective insulation under-roof	SA ≤ 0.23	SA > 0.23 to ≤ 0.32	SA > 0.32 to ≤ 0.42	SA > 0.42 to ≤ 0.53	SA > 0.53 to ≤ 0.64
Yes	2.0	2.5	2.5	3.0	3.5
No	3.0	3.0	3.5	4.0	4.5

Table Notes

(1) SA = solar absorptance.

(2) The *R-Value* of *reflective insulation* is not to be included in the *R-Value* of any under-roof or ceiling insulation.

(3) *R-Values* listed are for the labelled, declared *R-Value* of insulation.

Table J3D7e: Timber-framed pitched roof with horizontal ceiling — minimum R-Value for ceiling insulation: climate zone 2

Roof ventilation	*Reflective insulation* under-roof	Under-roof insulation *R-Value*	SA ≤ 0.23	SA > 0.23 to ≤ 0.32	SA > 0.32 to ≤ 0.42	SA > 0.42 to ≤ 0.53	SA > 0.53 to ≤ 0.64
Vented	Yes	Any	2.5				
	No	0 to < 0.5	2.5	3.0	3.0	3.5	3.5
		≥ 0.5	2.5				
Standard	Yes	Any	2.5				
	No	0 to < 0.5	3.0	3.0	3.5	4.0	4.0
		≥ 0.5 to < 1.0	2.5	2.5	2.5	3.0	3.0
		≥ 1.0	2.5				

Table Notes

(1) SA = solar absorptance.

(2) A roof is considered 'vented' if it—

(a) has one wind-driven roof ventilator per 50 m^2 of ceiling area with gable, eave or ridge vents; or

(b) has one powered roof ventilator per 200 m^2 of ceiling area with gable, eave or ridge vents; or

(c) is a tiled roof without *sarking-type material* at roof level.

(3) If a roof is not 'vented', it is a 'standard' roof.

(4) The *R-Value* of *reflective insulation* is not to be included in the *R-Value* of any under-roof or ceiling insulation.

(5) *R-Values* listed are for the labelled, declared *R-Value* of insulation.

Table J3D7f: Timber-framed flat, skillion or cathedral roof — minimum R-Value for ceiling insulation: climate zone 2

Reflective insulation under-roof	SA ≤ 0.23	SA > 0.23 to ≤ 0.32	SA > 0.32 to ≤ 0.42	SA > 0.42 to ≤ 0.53	SA > 0.53 to ≤ 0.64
Yes	2.5	2.5	2.5	2.5	2.5
No	3.0	3.0	3.5	4.0	4.0

Table Notes

(1) SA = solar absorptance.

(2) The *R-Value* can be achieved by installing insulation under the roof or on top of the ceiling or a combination of

both.

(3) The *R-Value* of *reflective insulation* is not to be included in the *R-Value* of any under-roof or ceiling insulation.

(4) *R-Values* listed are for the labelled, declared *R-Value* of insulation.

Table J3D7g: Flat concrete roof — minimum R-Value for ceiling insulation: climate zone 3

Reflective insulation under-roof	SA ≤ 0.23	SA > 0.23 to ≤ 0.32	SA > 0.32 to ≤ 0.42	SA > 0.42 to ≤ 0.53	SA > 0.53 to ≤ 0.64
Yes	2.0	2.0	2.5	2.5	3.0
No	3.0	3.5	4.0	4.5	5.0

Table Notes

(1) SA = solar absorptance.

(2) The *R-Value* of *reflective insulation* is not to be included in the *R-Value* of any under-roof or ceiling insulation.

(3) *R-Values* listed are for the labelled, declared *R-Value* of insulation.

Table J3D7h: Timber-framed pitched roof with horizontal ceiling — minimum R-Values for ceiling insulation: climate zone 3

Roof ventilation	*Reflective insulation* under-roof	Under-roof insulation *R-Value*	SA ≤ 0.23	SA > 0.23 to ≤ 0.32	SA > 0.32 to ≤ 0.42	SA > 0.42 to ≤ 0.53	SA > 0.53 to ≤ 0.64
Vented	Yes	< 0.5	2.5	2.5	2.5	2.5	2.5
		≥ 0.5 to < 1.0	2.0	2.0	2.0	2.0	2.0
		≥ 1.0 to < 1.5	2.5	2.0	2.0	2.0	2.0
		≥ 1.5 to < 2.0	2.0	2.0	2.5	2.5	2.5
		≥ 2.0	2.5	2.5	3.0	3.0	3.0
	No	< 0.5	3.5	4.0	4.5	5.0	X
		≥ 0.5 to < 1.0	3.0	3.5	3.5	4.0	4.5
		≥ 1.0 to < 1.5	2.5	3.0	3.0	3.0	3.5
		≥ 1.5 to < 2.0	2.5	3.0	3.0	3.0	3.0
		≥ 2.0	2.5	2.5	3.0	3.0	3.0
Standard	Yes	< 0.5	2.0	2.0	2.5	2.5	2.5
		≥ 0.5 to < 1.0	2.0	2.0	2.5	2.5	2.5
		≥ 1.0 to < 1.5	2.0	2.0	2.0	2.0	2.5
		≥ 1.5 to < 2.0	2.0	2.5	2.5	2.5	3.0
		≥ 2.0	2.0	2.0	2.5	2.5	2.5
	No	< 0.5	3.5	4.0	5.0	X	X
		≥ 0.5 to < 1.0	3.0	3.0	3.5	4.0	5.0
		≥ 1.0 to < 1.5	2.5	2.5	3.0	3.0	3.5
		≥ 1.5 to < 2.0	2.0	2.0	2.5	2.5	2.5
		≥ 2.0	2.0	2.0	2.5	2.5	2.5

Table Notes

(1) SA = solar absorptance.

(2) A roof is considered 'vented' if it—

(a) has one wind-drive roof ventilator per 50 m^2 of ceiling area with gable, eave or ridge vents; or

(b) has one powered roof ventilator per 200 m^2 of ceiling area with gable, eave or ridge vents; or

(c) is a tiled roof without *sarking-type material* at roof level.

(3) If a roof is not 'vented', it is a 'standard' roof.

(4) The *R-Value* of *reflective insulation* is not to be included in the *R-Value* of any under-roof or ceiling insulation.

(5) *R-Values* listed are for the labelled, declared *R-Value* of insulation.

(6) X = not permitted.

Table J3D7i: Timber-framed flat, skillion or cathedral roof — minimum R-Value for ceiling insulation: climate zone 3

Reflective insulation under-roof	SA ≤ 0.23	SA > 0.23 to ≤ 0.32	SA > 0.32 to ≤ 0.42	SA > 0.42 to ≤ 0.53	SA > 0.53 to ≤ 0.64
Yes	2.0	2.0	2.5	2.5	2.5
No	3.5	4.0	5.0	X	X

Table Notes

(1) SA = solar absorptance.

(2) The *R-Value* can be achieved by installing insulation under the roof or on top of the ceiling or a combination of both.

(3) The *R-Value* of *reflective insulation* is not to be included in the *R-Value* of any under-roof or ceiling insulation.

(4) *R-Values* listed are for the labelled, declared *R-Value* of insulation.

(5) X = not permitted.

Table J3D7j: Flat concrete roof — minimum R-Value for ceiling insulation: climate zone 4

Reflective insulation under-roof	≤ 0.64
Yes	2.0
No	2.5

Table Notes

(1) SA = solar absorptance.

(2) The *R-Value* of *reflective insulation* is not to be included in the *R-Value* of any under-roof or ceiling insulation.

(3) *R-Values* listed are for the labelled, declared *R-Value* of insulation.

Table J3D7k: Timber-framed pitched roof with horizontal ceiling — minimum R-Value for ceiling insulation: climate zone 4

Roof ventilation	*Reflective insulation* under- roof	Under-roof insulation *R-Value*	SA ≤ 0.23	SA > 0.23 to ≤ 0.64
Vented	Yes	< 0.5	3.0	3.5
		≥ 0.5	3.0	3.0
	No	Any	3.5	
Standard	Yes	Any	3.0	
	No	< 0.5	3.5	
		≥ 0.5	3.0	

Table Notes

(1) SA = solar absorptance.

(2) A roof is considered 'vented' if it—

(a) has one wind-driven roof ventilator per 50 m^2 of ceiling area with gable, eave or ridge vents; or

(b) has one powered roof ventilator per 200 m^2 of ceiling area with gable, eave or ridge vents; or

(c) is a tiled roof without *sarking-type material* at roof level.

(3) If a roof is not 'vented', it is a 'standard' roof.

(4) The *R-Value* of *reflective insulation* is not to be included in the *R-Value* of any under-roof or ceiling insulation.

(5) *R-Values* listed are for the labelled, declared *R-Value* of insulation.

Table J3D7l: Timber-framed flat, skillion or cathedral timber roof — minimum R-Value for ceiling insulation: climate zone 4

Reflective insulation under-roof	SA ≤ 0.64
Yes	3.0
No	3.5

Table Notes

(1) SA = solar absorptance.

(2) The *R-Value* can be achieved by installing insulation under the roof or on top of the ceiling or a combination of both.

(3) The *R-Value* of *reflective insulation* is not to be included in the *R-Value* of any under-roof or ceiling insulation.

(4) *R-Values* listed are for the labelled, declared *R-Value* of insulation.

Table J3D7m: Flat concrete roof — minimum R-Value for ceiling insulation: climate zone 5

Reflective insulation under-roof	SA ≤ 0.42	SA > 0.42 to ≤ 0.64
Yes	3.0	3.5
No	4.0	4.0

Table Notes

(1) SA = solar absorptance.

(2) The *R-Value* of *reflective insulation* is not to be included in the *R-Value* of any under-roof or ceiling insulation.

(3) *R-Values* listed are for the labelled, declared *R-Value* of insulation.

Table J3D7n: Timber-framed pitched roof with horizontal ceiling — minimum R-Value for ceiling insulation: climate zone 5

Roof ventilation	*Reflective insulation* under- roof	Under-roof insulation *R-Value*	SA ≤ 0.42	SA > 0.42 to ≤ 0.64
Vented	Yes	< 0.5	3.0	2.5
		≥ 0.5	2.5	
	No	0 to < 2.0	3.0	
		≥ 2.0	2.5	
Standard	Yes	Any	2.5	
	No	0 to < 1.0	3.0	
		≥ 1.0 to < 2.0	2.5	
		≥ 2.0	3.0	

Table Notes

(1) SA = solar absorptance.

(2) A roof is considered 'vented' if it—

(a) has one wind-driven roof ventilator per 50 m^2 of ceiling area with gable, eave or ridge vents; or

(b) has one powered roof ventilator per 200 m^2 of ceiling area with gable, eave or ridge vents; or

(c) is a tiled roof without *sarking-type material* at roof level.

(3) If a roof is not 'vented', it is a 'standard' roof.

(4) The *R-Value* of *reflective insulation* is not to be included in the *R-Value* of any under-roof or ceiling insulation.

(5) *R-Values* listed are for the labelled, declared *R-Value* of insulation.

Table J3D7o: Timber-framed flat, skillion or cathedral roof — minimum R-Value for ceiling insulation: climate zone 5

Reflective insulation under- roof	*R-Value*
Yes	2.5
No	3.0

Table Notes

(1) The *R-Value* can be achieved by installing insulation under the roof or on top of the ceiling or a combination of both.

(2) The *R-Value* of *reflective insulation* is not to be included in the *R-Value* of any under-roof or ceiling insulation.

(3) *R-Values* listed are for the labelled, declared *R-Value* of insulation.

Table J3D7p: Flat concrete roof — minimum R-Value for ceiling insulation: climate zones 7 and 8

Reflective insulation under-roof	SA ≤ 0.23	SA > 0.23 to ≤ 0.32	SA > 0.32 to ≤ 0.42	SA > 0.42 to ≤ 0.53	SA > 0.53 to ≤ 0.64	SA > 0.64 to ≤ 0.73	SA > 0.73
Yes	3.5	3.5	3.5	3.0	3.0	3.0	2.5
No	4.0	3.0	3.0	2.5	2.5	2.5	2.0

Table Notes

(1) SA = solar absorptance.

(2) The *R-Value* of *reflective insulation* is not to be included in the *R-Value* of any under-roof or ceiling insulation.

(3) *R-Values* listed are for the labelled, declared *R-Value* of insulation.

Table J3D7q: Timber-framed pitched roof with flat ceiling — minimum R-Value for ceiling insulation: climate zones 7 and 8

Roof ventilation	*Reflective insulation* under-roof	Under-roof insulation *R-Value*	SA ≤ 0.23	SA > 0.23 to ≤ 0.32	SA > 0.32 to ≤ 0.42	SA > 0.42 to ≤ 0.53	SA > 0.53 to ≤ 0.64	SA > 0.64 to ≤ 0.73	SA > 0.73 to ≤ 0.85	SA > 0.85
Standard	Yes	0 to < 1.0	4.5	4.5	4.5	4.0	4.0	4.0	4.0	4.0
		≥ 1.0	4.0	4.0	4.0	4.0	4.0	4.0	4.0	4.0
	No	0 to < 1.0	5.0	4.5	4.5	4.0	4.0	3.5	3.5	3.5
		≥ 1.0 to < 1.5	4.5	4.5	4.0	4.0	4.0	4.0	3.5	3.5
		≥ 1.5	4.0	4.0	4.0	4.0	4.0	4.0	4.0	4.0
Vented	Yes	0 to < 1.0	4.5	4.5	4.5	4.5	4.5	4.0	4.0	4.0
		≥ 1.0	4.5	4.5	4.5	4.5	4.0	4.0	4.0	4.0
	No	0 to < 1.0	5.0	4.5	4.5	4.5	4.0	4.0	3.5	3.5
		≥ 1.0 to < 1.5	4.5	4.5	4.5	4.5	4.0	4.0	4.0	4.0
		≥ 1.5	4.5	4.5	4.5	4.5	4.5	4.0	4.0	4.0

Table Notes

(1) SA = solar absorptance.

(2) A roof is considered 'vented' if it—

(a) has one wind-driven roof ventilator per 50 m^2 of ceiling area with gable, eave or ridge vents; or

(b) has one powered roof ventilator per 200 m^2 of ceiling area with gable, eave or ridge vents; or

(c) is ventilated to *outdoor air* through evenly distributed openings in accordance with Table F8D5; or

(d) is a tiled roof without *sarking-type material* at roof level.

(3) If a roof is not 'vented', it is a 'standard' roof.

(4) The *R-Value* of *reflective insulation* is not to be included in the *R-Value* of any under-roof or ceiling insulation.

(5) *R-Values* listed are for the labelled, declared *R-Value* of insulation.

Table J3D7r: Timber-framed flat, skillion or cathedral roof — minimum R-Value for ceiling insulation: climate zones 7 and 8

Reflective insulation under-roof	SA ≤ 0.23	SA > 0.23 to ≤ 0.32	SA > 0.32 to ≤ 0.42	SA > 0.42 to ≤ 0.53	SA > 0.53 to ≤ 0.64	SA > 0.64 to ≤ 0.73	SA > 0.73 to ≤ 0.85	SA > 0.85
Yes	4.5	4.5	4.5	4.0	4.0	4.0	4.0	4.0
No	5.0	4.5	4.5	4.0	4.0	3.5	3.5	3.5

Table Notes

(1) SA = solar absorptance.

(2) The *R-Value* can be achieved by installing insulation under the roof or on top of the ceiling or a combination of both.

(3) The *R-Value* of *reflective insulation* is not to be included in the *R-Value* of any under-roof or ceiling insulation.

(4) *R-Values* listed are for the labelled, declared *R-Value* for insulation.

Table J3D7s: Metal-framed pitched roof with horizontal ceiling — minimum Total R-Value of ceiling to account for thermal bridging

Ceiling insulation *R-Value* from Tables J3D7a to J3D7r and J3D7(1)(f) as applicable	Minimum *Total R-Value* to account for thermal bridging
1.5	1.38
2.0	1.74
2.5	2.09
3.0	2.43
3.5	2.63
4.0	2.95
4.5	3.27
5.0	3.59
5.5	3.91
6.0	4.23

Table Notes

(1) The *Total R-Value* calculation only includes the ceiling frame, insulation and ceiling lining. It is not to include the internal air films, roof space or roof lining.

(2) Minimum ceiling *Total R-Values* are in-situ values. They account for compression of insulation.

Table J3D7t: Metal-framed flat, skillion or cathedral roof — minimum Total R-Value to account for thermal bridging

Ceiling insulation *R-Value* from Tables J3D7a to J3D7r, and J3D7(1)(f) as applicable	Minimum *Total R-Value* to account for thermal bridging: heat flow down	Minimum *Total R-Value* to account for thermal bridging: heat flow up
1.0	1.40	1.32
1.5	1.86	1.78
2.0	2.29	2.21
2.5	2.71	2.63
3.0	3.11	3.02
3.5	3.31	3.22
4.0	3.66	3.57
4.5	3.98	3.90
5.0	4.32	4.22
5.5	4.63	4.53
6.0	4.93	4.82

Table Notes

(1) Minimum *Total R-Values* are in-situ values. They account for compression of insulation.

(2) Direction of heat flow must be determined in accordance with Table J3D7v.

Table J3D7u: Metal-framed flat, skillion or cathedral roof – thermal bridging mitigation

Minimum ceiling *R-Value* from Tables J3D7a to J3D7r, and J3D7(1)(f) as applicable	Option 1– increase insulation between roof frame members to specified minimum *R-Value*	Option 2 – add a layer of continuous insulation with specified minimum *R-Value* above or below the roof frame members
1.0	1.5	0.13
1.5	2.5	0.30
2.0	3.5	0.30
2.5	5.0	0.40
3.0	6.0	0.60
3.5	X	0.60
4.0	X	0.60
4.5	X	0.60
5.0	X	0.60
5.5	X	0.60
6.0	X	0.60

Table Notes

(1) Minimum *R-Values* are in-situ values. They account for compression of insulation.

(2) X= not permitted.

Table J3D7v: Direction of heat flow

Climate zone	Direction of heat flow
1	Down
2 – altitude less than 300 m	Down
2 – altitude 300 m or more	Down and up

Climate zone	Direction of heat flow
3	Down and up
4	Up
5	Up
6	Up
7	Up
8	Up

Table J3D7w: Adjusted minimum R-Value of ceiling insulation required to compensate for loss of ceiling insulation area

Percentage of ceiling area uninsulated	Minimum *R-Value* of ceiling insulation *required* to satisfy J3D7(1) and J3D7(3)									
	1.0	1.5	2.0	2.5	3.0	3.5	4.0	4.5	5.0	5.5
0.5% to less than 1.0%	1.0	1.6	2.2	2.8	3.4	4.0	4.7	5.4	6.2	6.9
1.0% to less than 1.5%	1.1	1.7	2.3	2.9	3.6	4.4	5.2	6.1	7.0	X
1.5% to less than 2.0%	1.1	1.7	2.4	3.1	3.9	4.8	5.8	6.8	X	X
2.0% to less than 2.5%	1.1	1.8	2.5	3.3	4.2	5.3	6.5	X	X	X
2.5% to less than 3.0%	1.2	1.9	2.6	3.6	4.6	5.9	X	X	X	X
3.0% to less than 4.0%	1.2	2.0	3.0	4.2	5.7	X	X	X	X	X
4.0% to less than 5.0%	1.3	2.2	3.4	5.0	X	X	X	X	X	X

Table Notes

(1) Interpolation is allowed for values between those shown.

(2) X = not permitted.

Table J3D7x: Total R-Values for roofs constructed with insulated sandwich panels

Climate zone	SA ≤ 0.23	SA > 0.23 to ≤ 0.32	SA > 0.32 to ≤ 0.42	SA > 0.42 to ≤ 0.53	SA > 0.53 to ≤ 0.64	SA > 0.64 to ≤ 0.73	SA > 0.73 to ≤ 0.85	SA > 0.85
1	1.86	3.31	4.32	X	X	X	X	X
2 – heat flow down	3.11	3.11	3.31	3.66	3.66	X	X	X
2 – heat flow up	3.02	3.02	3.22	3.57	3.57	X	X	X
3 – heat flow down	3.31	3.66	4.32	X	X	X	X	X
3 – heat flow up	3.22	3.57	4.22	X	X	X	X	X
4	3.22	3.22	3.22	3.22	3.22	X	X	X
5	3.02	3.02	3.02	3.02	3.02	X	X	X
6	3.57	3.57	3.57	3.57	3.57	3.57	3.57	3.57
7	4.22	3.90	3.90	3.57	3.57	3.22	3.22	3.22
8	3.90	3.57	3.57	3.22	3.22	3.02	3.02	3.02

Table Notes

(1) SA = solar absorptance.

(2) Direction of heat flow must be determined in accordance with Table J3D7v.

(3) X = not permitted.

NSW J3D8

J3D8 External walls of a sole-occupancy unit of a Class 2 building or a Class 4 part of a building

[New for 2022]

(1) The *Total R-Value* of an *external wall*—

(a) in *climate zones* 1, 2, 3, 5 and 6—

(i) where the ratio of the area of opaque *external walls* to the *floor area* of the *sole-occupancy unit* is less than 20%, must be at least R1.15; and

(ii) where the ratio of the area of opaque *external walls* to the *floor area* of the *sole-occupancy unit* is greater than or equal to 20% but less than 35%, must be at least R2.04; and

(iii) where the ratio of the area of opaque *external walls* to the *floor area* of the *sole-occupancy unit* is greater than or equal to 35%, must be at least R2.24; and

(b) in *climate zones* 4, 7 and 8, must be at least R2.24.

(2) The *Total R-Value* of an *external wall* must be determined in accordance with—

(a) for a spandrel panel in a curtain wall system, in accordance with Specification 38; and

(b) for all other walls, in accordance with AS/NZS 4859.2.

(3) The solar absorptance of an *external wall* must—

(a) in *climate zones* 1 to 6, be in accordance with Table J3D8a; and

(b) in *climate zones* 7 and 8, be in accordance with Table J3D8b.

Table J3D8a: Solar absorptance – climate zones 1 to 6

Climate zone	Opaque *external wall* to net *floor area* ratio	Permitted solar absorptance
1 and 3	< 45%	≤ 0.8
	≥ 45%	≤ 0.35
2	< 35%	Any
	≥ 35%	Any, or ≤ 0.35, if shading device overhang is < 300 mm
4 and 5	< 45%	Any
	≥ 45%	≤ 0.35, if shading device overhang is < 1500 mm
6	Any	Any

Table J3D8b: Solar absorptance – climate zones 7 and 8

Opaque *external wall* to net *floor area* ratio	Shading device overhang (mm)			
	≥ 0 to < 600	≥ 600 to < 900	≥ 900 to < 1200	≥ 1200
< 20%	Any	Any	≥ 0.4	X
≥ 20% to < 35%	Any	Any	X	X
≥ 35% to < 45%	Any	≥ 0.4	X	X
≥ 45%	Any	≥ 0.6	X	X

Table Notes

X = not permitted

NSW J3D9

J3D9 Wall-glazing construction of a sole-occupancy unit of a Class 2 building or a Class 4 part of a building

[New for 2022]

(1) The *Total System U-Value* of *wall-glazing construction* that forms part of the external building *fabric* must not be greater than—

(a) in *climate zones* 1 to 5, U2.2; or

(b) in *climate zone* 6, U2.0; or

(c) in *climate zones* 7 and 8, U1.4.

(2) The *Total System U-Value* of *wall-glazing construction* that forms part of the external building *fabric* must be calculated in accordance with Specification 37.

(3) Wall components of *wall-glazing construction* must achieve a minimum *Total R-Value* of—

(a) where the wall is less than 80% of the area of the *wall-glazing construction*, R1.0; or

(b) where the wall is 80% or more of the area of the *wall-glazing construction*, the value specified in Table J4D6a for a Class 3 building.

(4) In *climate zones* 1 to 6, the *solar admittance* of externally facing *wall-glazing construction* must be not greater than that shown in Table J3D9.

(5) In *climate zones* 7 and 8, *glazing* in a *wall-glazing construction* must have a *Total System SHGC* of at least 0.4.

(6) The *solar admittance* of a *wall-glazing construction* must be calculated in accordance with Specification 37.

(7) The solar absorptance of an *external wall* must be in accordance with J3D8(3).

Table J3D9: Maximum wall-glazing construction solar admittance

Climate zone	Eastern aspect *solar admittance*	Northern aspect *solar admittance*	Southern aspect *solar admittance*	Western aspect *solar admittance*
1	0.10	0.10	0.14	0.10
2	0.10	0.10	0.10	0.10
3	0.11	0.11	0.11	0.11
4	0.11	0.11	0.11	0.11
5	0.13	0.13	0.13	0.13
6	0.14	0.14	0.14	0.14
7	N/A	N/A	N/A	N/A
8	N/A	N/A	N/A	N/A

J3D10 Floors of a sole-occupancy unit of a Class 2 building or a Class 4 part of a building

[New for 2022]

NSW J3D10(1)

(1) Where a *sole-occupancy unit* of a Class 2 building or a Class 4 part of a building has a concrete floor above an unenclosed *carpark*, undercroft, or the like, underfloor insulation must be installed with an *R-Value* at least—

(a) in *climate zone* 2 and *climate zones* 5 to 8, R2.0; and

(b) in *climate zones* 3 and 4, R1.5.

NSW J3D10(2)

(2) Where a *sole-occupancy unit* of a Class 2 building or Class 4 part of a building has a concrete floor above an enclosed *carpark*, undercroft or the like, underfloor insulation must be installed with an *R-Value* at least—

(a) in *climate zone* 2, R0.5; and

(b) in *climate zones* 4 and 5, R1.0; and

(c) in *climate zone* 6, R1.5; and

(d) in *climate zones* 7 and 8, R2.0.

(3) A concrete slab-on-ground with an in-slab or in-screed heating or cooling system must have insulation with an *R-Value* at least 1.0 installed around the vertical edge of tis perimeter.

NSW J3D10(4)

(4) Except for a waffle-pod slab—

(a) in *climate zones* 6 and 7—

(i) insulation with an *R-Value* of at least 0.64 must be installed around the vertical edge of its perimeter; and

(ii) insulation with an *R-Value* of at least 0.64 must be installed underneath the slab; and

(b) in *climate zone* 8—

(i) insulation with an *R-Value* of at least 1.0 must be installed around the vertical edge of its perimeter; and

(ii) insulation with an *R-Value* of at least 2.0 must be installed underneath the slab.

(5) Insulation *required* by (3), (4)(a)(i) and (4)(b)(i) must—

(a) be *water resistant*; and

(b) be continuous from the adjacent finished ground level—

(i) to a depth of not less than 300 mm; or

(ii) for at least the full depth of the vertical edge of the concrete slab-on-ground.

(6) The requirements of (3) do not apply to an in-screed heating or cooling system used solely in a bathroom, amenity area or the like.

NSW J3D11

J3D11 External winter glazing of a sole-occupancy unit of a Class 2 building or a Class 4 part of a building

[New for 2022]

(1) In *climate zones* 2 to 8, the ratio of the conductance (C_U) and solar heat gain (C_{SHGC}) of the *glazing* of each *storey*, including any *mezzanine*, of a *sole-occupancy unit* of a Class 2 building or a Class 4 part of a building must—

(a) not exceed the allowance obtained from Table J3D11a; and

(b) be calculated in accordance with the following formula:

$$\frac{[(A_1 \times U_1 \times BC_1 \times OC_1 \times R_{W1}) + (A_2 \times U_2 \times BC_2 \times OC_2 \times R_{W2}) + \ldots]}{[(A_1 \times SHGC_1 \times E_{W1} \times BS_{W1} \times F_{W1} \times H_{W1} \times R_{W1}) + (A_2 \times SHGC_2 \times E_{W2} \times BS_{W2} \times F_{W2} \times H_{W2} \times R_{W2}) + \ldots]}$$

(2) In the formula at (1)(b)—

(a) $A_{1,2,etc}$ = the area of each *glazing* element; and

(b) $U_{1,2,etc}$ = the *Total System U-Value* of each *glazing* element; and

(c) $SHGC_{1,2,etc}$ = the *Total System SHGC* for each *glazing* element, not exceeding 0.7; and

(d) $E_{W1,2,etc}$ = the winter exposure factor for each *glazing* element obtained from Table J3D11b, J3D11c, J3D11d, J3D11e, J3D11f or J3D11g; and

(e) $BC_{1,2,etc}$ = the bedroom conductance factor obtained from Table J3D11h, J3D11i, J3D11j, J3D11k, J3D11l or J3D11m; and

(f) $OC_{1,2,etc}$ = the orientation sector conductance factor obtained from Table J3D11n; and

(g) $R_{W1,2,etc}$ = the room type factor obtained from Table J3D11h, J3D11i, J3D11j, J3D11k, J3D11l or J3D11m; and

(h) $BS_{W1,2,etc}$ = the bedroom solar heat gain factor obtained from Table J3D11h, J3D11i, J3D11j, J3D11k, J3D11l or J3D11m; and

(i) $F_{W1,2,etc}$ = the frame factor obtained from Table J3D11o, J3D11p, J3D11q, J3D11r, J3D11s or J3D11t for each *glazing* element; and

(j) $H_{W1,2,etc}$ = the floor factor obtained from Table J3D11h, J3D11i, J3D11j, J3D11k, J3D11l or J3D11m for each *glazing* element.

(3) For the purpose of J3D11—

(a) orientation sectors must be determined in accordance with Figure 13.3.2a of the ABCB Housing Provisions; and

(b) P/H must be determined in accordance with Figure S37C7; and

(c) For P/H between those in Tables J3D11b, J3D11c, J3D11d, J3D11e, J3D11f and J3D11g, either use the next highest P/H or interpolate.

Table J3D11a: Maximum conductance to solar heat gain ratio (C_U/C_{SHGC})

Climate zone	Maximum conductance to solar heat gain ratio (C_U/C_{SHGC})
2	16.95
3	19.88
4	13.34
5	11.83
6	6.27
7	12.90

Climate zone	Maximum conductance to solar heat gain ratio (C_U/C_{SHGC})
8	12.90

Table J3D11b: Orientation sector winter exposure factor (E_W): climate zone 2

P/H	North	North east	East	South east	South	South west	West	North west
0.00	1.49	1.61	1.23	0.96	0.68	1.03	1.37	1.71
0.05	1.44	1.53	1.14	0.81	0.57	0.90	1.27	1.64
0.10	1.38	1.48	1.09	0.76	0.53	0.85	1.22	1.55
0.20	1.21	1.32	0.97	0.69	0.50	0.75	1.10	1.39
0.40	1.00	1.06	0.77	0.57	0.42	0.63	0.92	1.14
0.60	0.83	0.87	0.69	0.50	0.37	0.55	0.77	0.96
0.80	0.62	0.69	0.56	0.43	0.35	0.50	0.66	0.79
1.00	0.43	0.59	0.46	0.41	0.33	0.43	0.56	0.65
1.20	0.26	0.47	0.40	0.36	0.31	0.40	0.53	0.53
1.40	0.22	0.40	0.33	0.33	0.29	0.38	0.47	0.44
1.60	0.18	0.32	0.31	0.33	0.28	0.35	0.39	0.39
1.80	0.15	0.28	0.27	0.31	0.26	0.33	0.35	0.32
2.00	0.12	0.21	0.24	0.29	0.26	0.33	0.33	0.31

Table J3D11c: Orientation sector winter exposure factor (E_W): climate zone 3

P/H	North	North east	East	South east	South	South west	West	North west
0.00	0.90	1.10	0.88	0.69	0.50	0.58	0.67	0.91
0.05	0.89	1.06	0.82	0.60	0.44	0.51	0.64	0.89
0.10	0.83	1.01	0.78	0.58	0.42	0.49	0.61	0.84
0.20	0.74	0.90	0.70	0.52	0.40	0.44	0.55	0.76
0.40	0.59	0.74	0.60	0.43	0.36	0.37	0.47	0.63
0.60	0.44	0.57	0.48	0.39	0.34	0.32	0.38	0.51
0.80	0.30	0.45	0.43	0.34	0.30	0.30	0.32	0.41
1.00	0.20	0.38	0.35	0.30	0.28	0.28	0.29	0.33
1.20	0.14	0.29	0.31	0.28	0.28	0.25	0.24	0.28
1.40	0.11	0.26	0.25	0.26	0.26	0.23	0.21	0.24
1.60	0.08	0.23	0.24	0.24	0.24	0.21	0.20	0.20
1.80	0.07	0.16	0.19	0.24	0.24	0.19	0.17	0.18
2.00	0.06	0.16	0.18	0.21	0.24	0.19	0.15	0.16

Table J3D11d: Orientation sector winter exposure factor (E_W): climate zone 4

P/H	North	North east	East	South east	South	South west	West	North west
0.00	1.58	1.66	1.16	0.93	0.70	0.78	0.85	1.38
0.05	1.54	1.60	1.06	0.79	0.58	0.66	0.79	1.32
0.10	1.53	1.54	1.04	0.74	0.56	0.62	0.75	1.28
0.20	1.30	1.41	0.94	0.67	0.50	0.56	0.68	1.15
0.40	1.18	1.20	0.78	0.57	0.44	0.48	0.58	0.99
0.60	0.98	0.99	0.69	0.50	0.38	0.42	0.49	0.81
0.80	0.85	0.81	0.60	0.45	0.36	0.38	0.44	0.68

P/H	North	North east	East	South east	South	South west	West	North west
1.00	0.68	0.73	0.52	0.41	0.32	0.34	0.37	0.58
1.20	0.49	0.56	0.46	0.36	0.32	0.32	0.34	0.50
1.40	0.38	0.52	0.42	0.33	0.30	0.30	0.30	0.42
1.60	0.27	0.45	0.39	0.33	0.28	0.28	0.26	0.37
1.80	0.21	0.39	0.35	0.31	0.28	0.26	0.24	0.32
2.00	0.19	0.35	0.31	0.29	0.26	0.24	0.22	0.26

Table J3D11e: Orientation sector winter exposure factor (E_W): climate zone 5

P/H	North	North east	East	South east	South	South west	West	North west
0.00	1.61	1.34	1.08	0.87	0.67	0.76	0.85	1.23
0.05	1.56	1.29	0.98	0.74	0.56	0.64	0.78	1.17
0.10	1.56	1.23	0.92	0.69	0.54	0.62	0.75	1.14
0.20	1.30	1.10	0.83	0.63	0.49	0.54	0.67	1.03
0.40	1.19	0.91	0.69	0.54	0.41	0.47	0.55	0.86
0.60	0.97	0.75	0.56	0.47	0.38	0.41	0.47	0.70
0.80	0.78	0.62	0.49	0.42	0.34	0.37	0.42	0.57
1.00	0.64	0.47	0.39	0.38	0.32	0.33	0.36	0.49
1.20	0.43	0.42	0.35	0.36	0.31	0.31	0.29	0.39
1.40	0.32	0.31	0.29	0.34	0.29	0.29	0.28	0.33
1.60	0.22	0.27	0.27	0.31	0.25	0.25	0.23	0.28
1.80	0.18	0.23	0.22	0.29	0.25	0.25	0.20	0.25
2.00	0.14	0.17	0.21	0.27	0.25	0.23	0.19	0.19

Table J3D11f: Orientation sector winter exposure factor (E_W): climate zone 6

P/H	North	North east	East	South east	South	South west	West	North west
0.00	3.04	2.50	1.52	1.51	1.51	1.63	1.76	2.75
0.05	2.94	2.36	1.39	1.28	1.26	1.38	1.62	2.61
0.10	2.91	2.28	1.33	1.21	1.19	1.30	1.52	2.55
0.20	2.50	2.05	1.18	1.08	1.05	1.16	1.40	2.34
0.40	2.29	1.77	1.01	0.91	0.91	0.98	1.20	1.98
0.60	1.95	1.51	0.86	0.77	0.81	0.83	1.04	1.71
0.80	1.73	1.28	0.72	0.71	0.74	0.80	0.92	1.42
1.00	1.38	1.02	0.65	0.64	0.67	0.69	0.78	1.24
1.20	1.12	0.95	0.55	0.61	0.60	0.65	0.72	1.04
1.40	0.85	0.72	0.49	0.54	0.60	0.62	0.64	0.93
1.60	0.70	0.65	0.42	0.50	0.56	0.54	0.56	0.79
1.80	0.51	0.53	0.40	0.47	0.53	0.51	0.54	0.72
2.00	0.40	0.47	0.38	0.44	0.49	0.51	0.48	0.58

Table J3D11g: Orientation sector winter exposure factor (E_W): climate zones 7 and 8

P/H	North	North east	East	South east	South	South west	West	North west
0.00	1.66	1.53	0.90	0.82	0.74	0.78	0.83	1.43
0.05	1.61	1.47	0.83	0.69	0.61	0.66	0.76	1.37

P/H	North	North east	East	South east	South	South west	West	North west
0.10	1.61	1.44	0.79	0.64	0.59	0.62	0.73	1.34
0.20	1.51	1.34	0.73	0.58	0.53	0.55	0.66	1.22
0.40	1.30	1.17	0.63	0.49	0.44	0.47	0.55	1.07
0.60	1.19	1.02	0.54	0.43	0.40	0.41	0.48	0.91
0.80	1.02	0.88	0.48	0.39	0.36	0.37	0.43	0.79
1.00	0.93	0.78	0.44	0.34	0.34	0.33	0.37	0.67
1.20	0.73	0.66	0.37	0.32	0.32	0.31	0.33	0.60
1.40	0.66	0.64	0.36	0.30	0.29	0.29	0.30	0.46
1.60	0.51	0.46	0.32	0.28	0.27	0.25	0.28	0.43
1.80	0.42	0.44	0.26	0.26	0.27	0.25	0.25	0.37
2.00	0.31	0.37	0.26	0.24	0.25	0.25	0.22	0.31

Table J3D11h: Conductance and radiation factors: climate zone 2

Type of factor	Factor
Bedroom conduction weighting factor (BC)	0.43
Room type multiplier (for bedroom and unconditioned areas) (R_W)	1.00
Bedroom solar heat gain weighting factor (BS_W)	0.40
Floor factor for tiled or vinyl covered floors (H_W)	1.02
Floor factor for other than tiled or vinyl covered floors (H_W)	0.96

Table J3D11i: Conductance and radiation factors: climate zone 3

Type of factor	Factor
Bedroom conduction weighting factor (BC)	0.42
Room type multiplier (for bedroom and unconditioned areas) (R_W)	1.00
Bedroom solar heat gain weighting factor (BS_W)	1.28
Floor factor for tiled or vinyl covered floors (H_W)	1.02
Floor factor for other than tiled or vinyl covered floors (H_W)	0.97

Table J3D11j: Conductance and radiation factors: climate zone 4

Type of factor	Factor
Bedroom conduction weighting factor (BC)	0.70
Room type multiplier (for bedroom and unconditioned areas) (R_W)	1.00
Bedroom solar heat gain weighting factor (BS_W)	0.60
Floor factor for tiled or vinyl covered floors (H_W)	1.04
Floor factor for other than tiled or vinyl covered floors (H_W)	0.92

Table J3D11k: Conductance and radiation factors: climate zone 5

Type of factor	Factor
Bedroom conduction weighting factor (BC)	0.63
Room type multiplier (for bedroom and unconditioned areas) (R_W)	1.10
Bedroom solar heat gain weighting factor (BS_W)	0.81
Floor factor for tiled or vinyl covered floors (H_W)	1.03
Floor factor for other than tiled or vinyl covered floors (H_W)	0.93

Table J3D11l: Conductance and radiation factors: climate zone 6

Type of factor	Factor
Bedroom conduction weighting factor (BC)	0.81
Room type multiplier (for bedroom and unconditioned areas) (R_W)	1.00
Bedroom solar heat gain weighting factor (BS_W)	0.65
Floor factor for tiled or vinyl covered floors (H_W)	1.02
Floor factor for other than tiled or vinyl covered floors (H_W)	0.98

Table J3D11m: Conductance and radiation factors: climate zones 7 and 8

Type of factor	Factor
Bedroom conduction weighting factor (BC)	0.60
Room type multiplier (for bedroom and unconditioned areas) (R_W)	1.00
Bedroom solar heat gain weighting factor (BS_W)	0.51
Floor factor for tiled or vinyl covered floors (H_W)	1.03
Floor factor for other than tiled or vinyl covered floors (H_W)	0.93

Table J3D11n: Orientation sector conductance factor (OC)

Climate zone	North	North east	East	South east	South	South west	West	North west
2	1.70	1.34	0.98	0.84	0.70	0.90	1.10	1.40
3	1.30	1.10	0.90	0.95	1.00	0.95	0.90	1.10
4	1.30	1.25	1.20	1.03	0.85	0.92	0.99	1.15
5	1.20	1.15	1.10	1.05	1.00	1.05	1.10	1.15
6	1.23	1.13	1.00	1.00	1.02	1.00	1.00	1.16
7 and 8	1.40	1.25	1.10	1.00	0.90	0.95	1.00	1.20

Table J3D11o: Frame factor (F_W) — climate zone 2

Frame solar absorptance	Factor
≤ 0.40	0.97
> 0.40 to < 0.68	1.00
≥ 0.68	1.08

Table Notes

Interpolation is allowed for values between those shown.

Table J3D11p: Frame factor (F_W) — climate zone 3

Frame solar absorptance	Factor
≤ 0.40	0.98
> 0.40 to < 0.68	1.00
≥ 0.68	1.05

Table Notes

Interpolation is allowed for values between those shown.

Table J3D11q: Frame factor (F_W) — climate zone 4

Frame solar absorptance	Factor
≤ 0.40	0.99
> 0.40 to < 0.68	1.00
≥ 0.68	1.01

Table Notes

Interpolation is allowed for values between those shown.

Table J3D11r: Frame factor (F_W) — climate zone 5

Frame solar absorptance	Factor
≤ 0.40	1.00
> 0.40 to < 0.68	1.00
≥ 0.68	1.01

Table Notes

Interpolation is allowed for values between those shown.

Table J3D11s: Frame factor (F_W) — climate zone 6

Frame solar absorptance	Factor
≤ 0.40	0.92
> 0.40 to < 0.68	1.00
≥ 0.68	1.13

Table Notes

Interpolation is allowed for values between those shown.

Table J3D11t: Frame factor (F_W) — climate zones 7 and 8

Frame solar absorptance	Factor
≤ 0.40	0.97
> 0.40 to < 0.68	1.00
≥ 0.68	1.01

Table Notes

Interpolation is allowed for values between those shown.

NSW J3D12

J3D12 External summer glazing of a sole-occupancy unit of a Class 2 building or a Class 4 part of a building

[New for 2022]

(1) In *climate zones* 1 to 7, the aggregate solar heat gain of the *glazing* in each *storey*, including any *mezzanine*, of a *sole-occupancy unit* of a Class 2 building or a Class 4 part of a building must—

(a) not exceed the allowance resulting from multiplying the *floor area* of the *storey*, including any *mezzanine*, measured within the enclosing walls, by the constant C_{SHGC} obtained from Table J3D12a; and

(b) be calculated in accordance with the following formula:

$$(A_1 \times SHGC_1 \times E_{S1} \times R_{S1} \times F_{S1} \times H_{S1}) + (A_2 \times SHGC_2 \times E_{S2} \times R_{S2} \times F_{S2} \times H_{S2}) + \ldots$$

(2) In the formula at (1)(b)—

(a) $A_{1,2,etc}$ = the area of each *glazing* element; and

(b) $SHGC_{1,2,etc}$ = the *Total System SHGC* for each *glazing* element, not exceeding 0.7; and

(c) $E_{S1,2,etc}$ = the summer exposure factor for each *glazing* element obtained from Table J3D12b, J3D12c, J3D12d, J3D12e, J3D12f, J3D12g or J3D12h.

(d) $R_{S1,2,etc}$ = the factor obtained from Table J3D12i or Table J3D12j for each *glazing* element located in a bedroom or room which is not a *conditioned space*; and

(e) $F_{S1,2,etc}$ = the frame factor obtained from Table J3D12i or Table J3D12j for *glazing* element; and

(f) $H_{S1,2,etc}$ = the floor factor obtained from Table J3D12i or Table J3D12j for each *glazing* element.

(3) For the purpose of J3D12—

(a) orientation sectors must be determined in accordance with Figure 13.3.2a of the ABCB Housing Provisions; and

(b) P/H must be determined in accordance with Figure S37C7; and

(c) for P/H between those shown in Tables J3D12b, J3D12c, J3D12d, J3D12e, J3D12f, J3D12g, J3D12h, J3D12i and J3D12j, either use the next highest P/H or interpolate.

Table J3D12a: Constant for Solar Heat Gain (C_{SHGC}) — climate zones 1 to 7

% Ventilation opening area per m²	*Climate zone* 1	*Climate zone* 2	*Climate zone* 3	*Climate zone* 4	*Climate zone* 5	*Climate zone* 6	*Climate zone* 7
5% to <10%	0.0191	0.0245	0.0547	0.0506	0.0674	0.1472	0.0930
10% to <15%	0.0237	0.0532	0.0745	0.0946	0.1111	0.2969	0.2405
15% to <20%	0.0294	0.0700	0.0861	0.1203	0.1367	0.3845	0.3267
20% to 90%	0.0364	0.0819	0.0943	0.1385	0.1548	0.4466	0.3879

Table Notes

(1) The *ventilation opening* area is the total area of each *ventilation opening* divided by the *floor area* of the *storey*, including any *mezzanine*.

(2) No window can have a design *ventilation opening* greater than 90% because the window frame will always obstruct some area of the opening.

(3) Interpolation is allowed for values between those shown.

Table J3D12b: Orientation sector summer exposure factor (E_s) — climate zone 1

P/H	North	North east	East	South east	South	South west	West	North west
0.00	0.62	0.76	0.79	0.75	0.52	0.89	1.06	0.85
0.05	0.52	0.67	0.73	0.68	0.45	0.82	0.98	0.75
0.10	0.49	0.61	0.68	0.65	0.41	0.76	0.92	0.69
0.20	0.44	0.53	0.62	0.57	0.33	0.66	0.80	0.60
0.40	0.36	0.41	0.48	0.42	0.25	0.53	0.66	0.47
0.60	0.30	0.33	0.40	0.36	0.20	0.42	0.53	0.38
0.80	0.26	0.28	0.32	0.28	0.18	0.36	0.46	0.32
1.00	0.23	0.23	0.27	0.25	0.15	0.30	0.38	0.28
1.20	0.21	0.21	0.23	0.20	0.13	0.27	0.34	0.26
1.40	0.20	0.19	0.20	0.18	0.13	0.22	0.30	0.22
1.60	0.18	0.16	0.17	0.16	0.11	0.20	0.27	0.21
1.80	0.15	0.16	0.16	0.13	0.10	0.20	0.24	0.18
2.00	0.14	0.15	0.14	0.13	0.10	0.17	0.22	0.17

Table J3D12c: Orientation sector summer exposure factor (E_s) — climate zone 2

P/H	North	North east	East	South east	South	South west	West	North west
0.00	0.65	1.16	1.59	1.20	0.73	1.30	1.77	1.23
0.05	0.54	1.01	1.43	1.06	0.61	1.18	1.62	1.10
0.10	0.50	0.94	1.35	0.99	0.58	1.10	1.50	1.00
0.20	0.42	0.81	1.20	0.88	0.51	0.98	1.32	0.87
0.40	0.35	0.62	0.95	0.70	0.40	0.78	1.10	0.67
0.60	0.30	0.48	0.78	0.57	0.33	0.64	0.88	0.50
0.80	0.26	0.41	0.65	0.47	0.29	0.54	0.77	0.43
1.00	0.23	0.33	0.56	0.40	0.24	0.47	0.62	0.36
1.20	0.21	0.30	0.46	0.35	0.22	0.40	0.54	0.31
1.40	0.19	0.26	0.42	0.32	0.21	0.35	0.48	0.27
1.60	0.17	0.25	0.36	0.29	0.19	0.31	0.41	0.24
1.80	0.15	0.22	0.31	0.25	0.17	0.30	0.37	0.22
2.00	0.15	0.21	0.29	0.24	0.16	0.26	0.36	0.21

Table J3D12d: Orientation sector summer exposure factor (E_s) — climate zone 3

P/H	North	North east	East	South east	South	South west	West	North west
0.00	0.80	1.26	1.41	1.38	0.89	1.33	1.29	1.20
0.05	0.67	1.14	1.31	1.26	0.77	1.21	1.20	1.07
0.10	0.63	1.03	1.24	1.19	0.73	1.14	1.13	0.99
0.20	0.54	0.88	1.09	1.05	0.62	1.00	1.01	0.87
0.40	0.46	0.68	0.87	0.83	0.51	0.83	0.80	0.67
0.60	0.40	0.52	0.73	0.68	0.42	0.66	0.67	0.52
0.80	0.34	0.42	0.58	0.55	0.36	0.58	0.57	0.42
1.00	0.29	0.35	0.50	0.47	0.32	0.49	0.50	0.35
1.20	0.27	0.31	0.42	0.40	0.28	0.43	0.41	0.31
1.40	0.24	0.27	0.35	0.36	0.27	0.37	0.39	0.27

P/H	North	North east	East	South east	South	South west	West	North west
1.60	0.24	0.24	0.33	0.32	0.22	0.36	0.33	0.25
1.80	0.21	0.23	0.30	0.28	0.22	0.32	0.31	0.23
2.00	0.21	0.22	0.25	0.28	0.20	0.28	0.26	0.20

Table J3D12e: Orientation sector summer exposure factor (E_s) — climate zone 4

P/H	North	North east	East	South east	South	South west	West	North west
0.00	0.79	1.13	1.12	1.05	0.68	1.14	1.44	1.23
0.05	0.67	1.05	1.05	0.97	0.59	1.05	1.34	1.12
0.10	0.62	0.95	0.99	0.91	0.55	0.98	1.29	1.03
0.20	0.47	0.83	0.90	0.82	0.49	0.87	1.16	0.89
0.40	0.33	0.63	0.74	0.67	0.41	0.71	0.94	0.68
0.60	0.30	0.48	0.59	0.56	0.35	0.61	0.79	0.50
0.80	0.26	0.36	0.50	0.49	0.30	0.52	0.65	0.40
1.00	0.22	0.29	0.44	0.42	0.26	0.45	0.56	0.33
1.20	0.21	0.25	0.37	0.37	0.24	0.40	0.50	0.28
1.40	0.18	0.22	0.31	0.34	0.20	0.38	0.42	0.23
1.60	0.18	0.19	0.30	0.30	0.19	0.33	0.36	0.22
1.80	0.15	0.17	0.26	0.27	0.17	0.29	0.35	0.19
2.00	0.14	0.16	0.22	0.23	0.17	0.28	0.29	0.18

Table J3D12f: Orientation sector summer exposure factor (E_s) — climate zone 5

P/H	North	North east	East	South east	South	South west	West	North west
0.00	0.82	1.20	1.31	1.06	0.82	1.04	1.30	1.16
0.05	0.69	1.06	1.18	0.94	0.68	0.92	1.19	1.04
0.10	0.63	0.97	1.11	0.87	0.65	0.86	1.11	0.94
0.20	0.51	0.84	0.98	0.77	0.58	0.76	0.99	0.83
0.40	0.39	0.64	0.78	0.63	0.46	0.62	0.81	0.62
0.60	0.35	0.51	0.64	0.52	0.40	0.51	0.65	0.48
0.80	0.30	0.41	0.55	0.44	0.34	0.43	0.52	0.40
1.00	0.26	0.34	0.46	0.37	0.30	0.37	0.46	0.31
1.20	0.24	0.29	0.40	0.33	0.26	0.33	0.40	0.27
1.40	0.21	0.25	0.35	0.30	0.24	0.29	0.34	0.24
1.60	0.20	0.24	0.32	0.25	0.22	0.27	0.30	0.21
1.80	0.18	0.22	0.28	0.23	0.20	0.23	0.27	0.20
2.00	0.17	0.19	0.26	0.23	0.19	0.21	0.25	0.19

Table J3D12g: Orientation sector summer exposure factor (E_s) — climate zone 6

P/H	North	North east	East	South east	South	South west	West	North west
0.00	2.18	2.75	2.88	2.22	1.59	2.46	2.91	2.90
0.05	1.85	2.47	2.63	1.99	1.35	2.25	2.70	2.64
0.10	1.69	2.30	2.48	1.89	1.27	2.13	2.60	2.43
0.20	1.35	1.96	2.20	1.66	1.14	1.92	2.33	2.13
0.40	0.94	1.48	1.78	1.38	0.94	1.57	1.87	1.61

P/H	North	North east	East	South east	South	South west	West	North west
0.60	0.78	1.10	1.53	1.15	0.81	1.36	1.58	1.19
0.80	0.68	0.89	1.25	0.97	0.68	1.17	1.37	0.94
1.00	0.57	0.74	1.05	0.82	0.60	0.98	1.16	0.84
1.20	0.52	0.61	0.93	0.74	0.60	0.91	1.00	0.68
1.40	0.47	0.56	0.80	0.66	0.49	0.80	0.87	0.61
1.60	0.42	0.48	0.70	0.61	0.47	0.73	0.79	0.49
1.80	0.39	0.46	0.65	0.56	0.44	0.66	0.71	0.47
2.00	0.36	0.43	0.60	0.54	0.44	0.61	0.64	0.40

Table J3D12h: Orientation sector summer exposure factor (E_s) — climate zone 7

P/H	North	North east	East	South east	South	South west	West	North west
0.00	0.89	1.06	1.06	0.93	0.70	0.91	1.06	1.07
0.05	0.77	0.95	0.97	0.82	0.59	0.81	0.97	0.97
0.10	0.71	0.88	0.92	0.79	0.56	0.76	0.92	0.89
0.20	0.58	0.77	0.82	0.69	0.50	0.68	0.81	0.78
0.40	0.37	0.59	0.67	0.57	0.42	0.55	0.66	0.58
0.60	0.30	0.46	0.57	0.50	0.36	0.47	0.56	0.46
0.80	0.26	0.36	0.48	0.44	0.31	0.41	0.47	0.36
1.00	0.23	0.30	0.42	0.37	0.28	0.35	0.39	0.29
1.20	0.20	0.25	0.36	0.34	0.25	0.31	0.34	0.25
1.40	0.18	0.21	0.32	0.30	0.23	0.28	0.29	0.22
1.60	0.17	0.19	0.29	0.27	0.22	0.26	0.28	0.19
1.80	0.16	0.18	0.25	0.24	0.20	0.24	0.24	0.17
2.00	0.15	0.17	0.24	0.23	0.20	0.21	0.22	0.16

Table J3D12i: Conductance factors — climate zone 1

Factor	Value
Room type multiplier (for bedroom and unconditioned areas) (R_S)	0.32
Frame solar absorptance multiplier Frame SA = 0.3 up to 0.4 (F_S)	0.83
Frame solar absorptance multiplier Frame SA = 0.4 up to 0.5 (F_S)	1.00
Frame solar absorptance multiplier Frame SA = 0.5 or more (F_S)	1.20
Floor factor for tiled or vinyl covered floors (H_S)	1.00
Floor factor for other than tiled or vinyl covered floors (H_S)	1.00

Table J3D12j: Conductance factors — climate zones 2 to 7

Type of factor	*Climate zone* 2	*Climate zone* 3	*Climate zone* 4	*Climate zone* 5	*Climate zone* 6	*Climate zone* 7
Room type multiplier (for bedroom and unconditioned areas) (R_S)	0.40	0.56	0.71	0.91	0.87	1.11
Frame solar absorptance multiplier (for metal frame windows) (F_S) SA ≤ 0.40	1.00	0.89	0.87	0.85	0.74	0.86
Frame solar absorptance multiplier (for metal frame windows) (F_S) SA > 0.40 to < 0.68	1.06	1.00	1.00	1.00	1.00	1.00
Frame solar absorptance multiplier (for metal frame windows) (F_S) SA ≥ 0.68	1.22	1.18	1.22	1.24	1.22	1.32
Floor factor for tiled or vinyl covered floors (H_S)	1.06	1.06	1.13	1.13	1.04	1.21
Floor factor for other than tiled or vinyl covered floors (H_S)	0.97	0.97	0.94	0.94	0.94	0.90

Table Notes

Interpolation is allowed for values between those shown.

NSW J3D13

J3D13 Shading of a sole-occupancy unit of a Class 2 building or a Class 4 part of a building

[New for 2022]

Where shading is *required* to comply with J3D11 or J3D12, it must—

(a) be provided by an external permanent projection, such as a verandah, balcony, fixed canopy, eaves, shading hood or carport, which—

(i) extends horizontally on both sides of the *glazing* for a distance greater than or equal to the projection distance P in Figure S37C7; or

(ii) provide the equivalent shading to (i) with a reveal or the like; or

(b) be provided by an external shading device, such as a shutter, blind, vertical or horizontal building screen with blades, battens or slats, which—

(i) is capable of restricting at least 80% of the summer solar radiation; and

(ii) if adjustable, is readily operated either manually, mechanically or electronically by the building occupants.

NSW J3D14

J3D14 Net equivalent energy usage of a sole-occupancy unit of a Class 2 building or a Class 4 part of a building

[New for 2022]

(1) The net equivalent energy usage of a *sole-occupancy unit* of a Class 2 building or Class 4 part of a building, calculated in accordance with (a), must not exceed the allowance calculated in accordance with (b)—

(a) $(A \times E_E) + E_P + E_S - E_R$, where—

(i) A = the floor area factor obtained from multiplying the total floor area by the adjustment factor in Table J3D14a; and

(ii) E_E = the *main space conditioning* and *main water heater* efficiency factor obtained from the ABCB Standard for Whole-of-Home Efficiency Factors; and

(iii) E_P = the swimming pool pump energy usage in (2); and

(iv) E_S = the spa pump energy usage in (3); and

(v) E_R = the installed capacity of on-site photovoltaics apportioned to the *sole-occupancy unit* of a Class 2 building or Class 4 part of a building (kW); and

(b) $A \times E_F$, where—

(i) A = the floor area factor obtained from multiplying the total floor area by the adjustment factor in Table J3D14a; and

(ii) E_F = the energy factor obtained from Table J3D14b.

(2) The swimming pool pump energy usage (E_P) must be determined in accordance with the following formula: $E_P = V \times FP / 1000$, where—

(a) E_P = the swimming pool pump energy usage; and

(b) V = the volume of the swimming pool to the nearest 1000 litres; and

(c) FP = the swimming pool pump factor in Table 13.6.2c of the ABCB Housing Provisions.

(3) The spa pump energy usage (E_S) must be determined in accordance with the following formula: $E_S = V \times FSB / 100$,where—

(a) ES = the spa pump energy usage; and

(b) V = the volume of the spa to the nearest 100 litres; and

(c) FSB = the spa pump factor in Table 13.6.2d of the ABCB Housing Provisions.

Table J3D14a: Floor area adjustment factor for a sole-occupancy unit of a Class 2 building or a Class 4 part of a building

Total floor area m^2	Floor area factor	Total floor area m^2	Floor area factor	Total floor area m^2	Floor area factor	Total floor area m^2	Floor area factor
< 50	0.0123	160–169	0.0097	280–289	0.0087	400–409	0.0080
50–59	0.0119	170–179	0.0096	290–299	0.0086	410–419	0.0079
60–69	0.0116	180–189	0.0095	300–309	0.0085	420–429	0.0079
70–79	0.0113	190–199	0.0094	310–319	0.0085	430–439	0.0078

Total floor area m^2	Floor area factor	Total floor area m^2	Floor area factor	Total floor area m^2	Floor area factor	Total floor area m^2	Floor area factor
80–89	0.0111	200–209	0.0093	320–329	0.0084	440–449	0.0078
90–99	0.0108	210–219	0.0092	330–339	0.0083	450–459	0.0077
100–109	0.0106	220–229	0.0091	340–349	0.0083	460–469	0.0077
110–119	0.0105	230–239	0.0090	350–359	0.0082	470–479	0.0077
120–129	0.0103	240–249	0.0090	360–369	0.0082	480–489	0.0076
130–139	0.0101	250–259	0.0089	370–379	0.0081	490–499	0.0076
140–149	0.0100	260–269	0.0088	380–389	0.0081	500	0.0075
150–159	0.0099	270–279	0.0087	390–399	0.0080	—	—

Table Notes

(1) The total floor area is measured within the inside face of the *external walls* of the *sole-occupancy unit* and includes any conditioned attached Class 10a building.

(2) Where values fall between ranges given, the floor area must be rounded up to the nearest whole square metres of floor area.

Table J3D14b: Energy factor for a sole-occupancy unit of a Class 2 building or a Class 4 part of a building

Climate zone	ACT	NSW	NT	QLD	SA	TAS	Vic	WA
1	—	—	2.73	3.95	—	—	—	4.64
2	—	1.88	—	2.54	—	—	—	—
3	—	—	1.76	3.52	—	—	—	4.10
4	—	2.57	—	—	2.65	—	1.79	3.34
5	—	2.50	—	3.26	2.56	—	—	3.36
6	—	3.43	—	—	3.58	—	2.32	4.58
7	3.66	3.32	—	—	—	4.41	2.32	—
8	—	5.70	—	—	—	5.60	4.02	—

NSW J3D15

J3D15 Net equivalent energy usage for a sole-occupancy unit of a Class 2 building or Class 4 part of building – home energy rating software

[New for 2022]

A *sole-occupancy unit* of a Class 2 building or a Class 4 part of a building must achieve a whole-of-home rating of not less than 50 using *house energy rating software*.

Part J4 Building fabric

NT Part J4

Introduction to this Part

This Part contains *Deemed-to-Satisfy Provisions* for compliance with Part J1. It sets out provisions for the building *envelope* including roofs, ceilings, roof lights, walls, *glazing* and floors.

Notes

From 1 May 2023 to 30 September 2023 Section J of NCC 2019 Volume One Amendment 1 may apply instead of Section J of NCC 2022 Volume One. From 1 October 2023 Section J of NCC 2022 Volume One applies.

Notes: New South Wales Section J Energy Efficiency

(1) For a Class 2 building or a Class 4 part of a building, where a relevant *development consent* or an application for a complying development certificate requires compliance with a BASIX Single Dwelling or Multi Dwelling Certificate issued under Version 3.0 or earlier, NSW Section J of NCC 2019 Volume One Amendment 1 applies.

(2) For a Class 2 building or a Class 4 part of a building, where a relevant *development consent* or an application for a complying development certificate requires compliance with a BASIX Single Dwelling or Multi Dwelling Certificate issued under Version 4.0 or later, Section J of NCC 2022 Volume One applies.

(3) For a Class 2 building or a Class 4 part of a building, where a relevant *development consent* or an application for a complying development certificate requires compliance with a BASIX Alterations and Additions Certificate, NSW Section J of NCC 2019 Volume One Amendment 1 applies.

(4) For a Class 3 building or Class 5 to 9 building:

(i) From 1 May 2023 to 30 September 2023 NSW Section J of NCC 2019 Volume One Amendment 1 may apply instead of Section J of NCC 2022 Volume One.

(ii) From 1 October 2023 Section J of NCC 2022 Volume One applies.

Notes: Tasmania Section J Energy Efficiency

In Tasmania, for a Class 2 building and Class 4 part of a building, Section J is replaced with Section J of BCA 2019 Amendment 1.

Deemed-to-Satisfy Provisions

J4D1 Deemed-to-Satisfy Provisions

[2019: J1.0]

NSW J4D1(1)

(1) Where a *Deemed-to-Satisfy Solution* is proposed, *Performance Requirements* J1P1 to J1P4 are satisfied by complying with—

(a) J2D2; and

(b) J3D2 to J3D15; and

(c) J4D2 to J4D7; and

(d) J5D2 to J5D8; and

(e) J6D2 to J6D13; and

(f) J7D2 to J7D9; and

(g) J8D2 to J8D4; and

(h) J9D2 to J9D5.

(2) Where a *Performance Solution* is proposed, the relevant *Performance Requirements* must be determined in accordance with A2G2(3) and A2G4(3) as applicable.

NSW J4D2

J4D2 Application of Part

[2019: J1.1]

The *Deemed-to-Satisfy Provisions* of this Part apply to building elements forming the *envelope* of a Class 2 to 9 building other than J4D3(5), J4D4, J4D5, J4D6 and J4D7 which do not apply to a Class 2 *sole-occupancy unit* or a Class 4 part of a building.

NSW J4D3

J4D3 Thermal construction — general

[2019: J1.2]

(1) Where *required*, insulation must comply with AS/NZS 4859.1 and be installed so that it—

(a) abuts or overlaps adjoining insulation other than at supporting members such as studs, noggings, joists, furring channels and the like where the insulation must be against the member; and

(b) forms a continuous barrier with ceilings, walls, bulkheads, floors or the like that inherently contribute to the thermal barrier; and

(c) does not affect the safe or effective operation of a *service* or fitting.

(2) Where *required*, *reflective insulation* must be installed with—

(a) the necessary airspace to achieve the *required R-Value* between a reflective side of the *reflective insulation* and a building lining or cladding; and

(b) the *reflective insulation* closely fitted against any penetration, door or *window* opening; and

(c) the *reflective insulation* adequately supported by framing members; and

(d) each adjoining sheet of roll membrane being—

(i) overlapped not less than 50 mm; or

(ii) taped together.

(3) Where *required*, bulk insulation must be installed so that—

(a) it maintains its position and thickness, other than where it is compressed between cladding and supporting members, water pipes, electrical cabling or the like; and

(b) in a ceiling, where there is no bulk insulation or *reflective insulation* in the wall beneath, it overlaps the wall by not less than 50 mm.

(4) Roof, ceiling, wall and floor materials, and associated surfaces are deemed to have the thermal properties listed in Specification 36.

(5) The *required Total R-Value* and *Total System U-Value*, including allowance for thermal bridging, must be—

(a) calculated in accordance with AS/NZS 4859.2 for a roof or floor; or

(b) determined in accordance with Specification 37 for *wall-glazing construction*; or

(c) determined in accordance with Specification 39 or Section 3.5 of CIBSE Guide A for soil or sub-floor spaces.

J4D4 Roof and ceiling construction

[2019: J1.3]

(1) A roof or ceiling must achieve a *Total R-Value* greater than or equal to—

(a) in *climate zones* 1, 2, 3, 4 and 5, R3.7 for a downward direction of heat flow; and

(b) in *climate zone* 6, R3.2 for a downward direction of heat flow; and

(c) in *climate zone* 7, R3.7 for an upward direction of heat flow; and

(d) in *climate zone* 8, R4.8 for an upward direction of heat flow.

(2) In *climate zones* 1, 2, 3, 4, 5, 6 and 7, the solar absorptance of the upper surface of a roof must be not more than 0.45.

J4D5 Roof lights

[2019: J1.4]

Roof lights must have—

(a) a total area of not more than 5% of the *floor area* of the room or space served; and

(b) transparent and translucent elements, including any imperforate ceiling diffuser, with a combined performance of—

(i) for *Total system SHGC*, in accordance with Table J4D5; and

(ii) for *Total system U-Value*, not more than U3.9.

Table J4D5: Roof lights – Total system SHGC

Roof light shaft index Note 1	Total area of *roof lights* up to 3.5% of the *floor area* of the room or space	Total area of *roof lights* more than 3.5% and up to 5% of the *floor area* of the room or space
<1.0	≤ 0.45	≤ 0.29
≥ 1.0 to < 2.5	≤ 0.51	≤ 0.33
≥ 2.5	≤ 0.76	≤ 0.49

Table Notes

(1) The *roof light* shaft index is determined by measuring the distance from the centre of the shaft at the roof to the centre of the shaft at the ceiling level and dividing it by the average internal dimension of the shaft opening at the ceiling level (or the diameter for a circular shaft) in the same units of measurement.

(2) The area of a *roof light* is the area of the roof opening that allows light to enter the building.

(3) The total area of *roof lights* is the combined area for all *roof lights* serving the room or space.

NSW J4D6

J4D6 Walls and glazing

[2019: J1.5]

(1) The *Total System U-Value* of *wall-glazing construction*, including *wall-glazing construction* which wholly or partly forms the *envelope* internally, must not be greater than—

(a) for a Class 2 common area, a Class 5, 6, 7, 8 or 9b building or a Class 9a building other than a *ward area*, U2.0; and

(b) for a Class 3 or 9c building or a Class 9a *ward area*—

(i) in *climate zones* 1, 3, 4, 6 or 7, U1.1; or

(ii) in *climate zones* 2 or 5, U2.0; or

(iii) in *climate zone* 8, U0.9.

(2) The *Total System U-Value* of *display glazing* must not be greater than U5.8.

(3) The *Total System U-Value* of *wall-glazing construction* must be calculated in accordance with Specification 37.

(4) Wall components of a *wall-glazing construction* must achieve a minimum *Total R-Value* of—

(a) where the wall is less than 80% of the area of the *wall-glazing construction*, R1.0; or

(b) where the wall is 80% or more of the area of the *wall-glazing construction*, the value specified in Table J4D6a.

(5) The *solar admittance* of externally facing *wall-glazing construction*, excluding *wall-glazing construction* which is wholly internal, must not be greater than—

(a) for a Class 2 common area, a Class 5, 6, 7, 8 or 9b building or a Class 9a building other than a *ward area*, the values specified in Table J4D6b; and

(b) for a Class 3 or 9c building or a Class 9a *ward area*, the values specified in Table J4D6c.

(6) The *solar admittance* of a *wall-glazing construction* must be calculated in accordance with Specification 37.

(7) The *Total system SHGC* of *display glazing* must not be greater than 0.81 divided by the applicable shading factor specified in S37C7.

Table J4D6a: Minimum wall Total R-Value - Wall area 80% or more of wall-glazing construction area

Climate zone	Class 2 common area, Class 5, 6, 7, 8 or 9b building or a Class 9a building other than a *ward area*	Class 3 or 9c building or Class 9a *ward area*
1	2.4	3.3
2	1.4	1.4
3	1.4	3.3
4	1.4	2.8
5	1.4	1.4
6	1.4	2.8
7	1.4	2.8
8	1.4	3.8

Table J4D6b: Maximum wall-glazing construction solar admittance - Class 2 common area, Class 5, 6, 7, 8 or 9b building or Class 9a building other than a ward area

Climate zone	Eastern aspect *solar admittance*	Northern aspect *solar admittance*	Southern aspect *solar admittance*	Western aspect *solar admittance*
1	0.12	0.12	0.12	0.12
2	0.13	0.13	0.13	0.13
3	0.16	0.16	0.16	0.16
4	0.13	0.13	0.13	0.13
5	0.13	0.13	0.13	0.13
6	0.13	0.13	0.13	0.13
7	0.13	0.13	0.13	0.13
8	0.2	0.2	0.42	0.36

Table J4D6c: Maximum wall-glazing construction solar admittance - Class 3 or 9c building or Class 9a ward area

Climate zone	Eastern aspect *solar admittance*	Northern aspect *solar admittance*	Southern aspect *solar admittance*	Western aspect *solar admittance*
1	0.07	0.07	0.10	0.07
2	0.10	0.10	0.10	0.10
3	0.07	0.07	0.07	0.07
4	0.07	0.07	0.07	0.07
5	0.10	0.10	0.10	0.10
6	0.07	0.07	0.07	0.07

Climate zone	Eastern aspect *solar admittance*	Northern aspect *solar admittance*	Southern aspect *solar admittance*	Western aspect *solar admittance*
7	0.07	0.07	0.08	0.07
8	0.08	0.08	0.08	0.08

J4D7 Floors

[2019: J1.6]

(1) A floor must achieve the *Total R-Value* specified in Table J4D7.

(2) For the purposes of (1), a slab-on-ground that does not have an in-slab heating or cooling system is considered to achieve a *Total R-Value* of R2.0, except—

(a) in *climate zone* 8; or

(b) a Class 3, Class 9a *ward area* or Class 9b building in *climate zone* 7 that has a *floor area* to floor perimeter ratio of less than or equal to 2.

(3) A floor must be insulated around the vertical edge of its perimeter with insulation having an *R-Value* greater than or equal to 1.0 when the floor—

(a) is a concrete slab-on-ground in *climate zone* 8; or

(b) has an in-slab or in-screed heating or cooling system, except where used solely in a bathroom, amenity area or the like.

(4) Insulation *required* by (3) for a concrete slab-on-ground must—

(a) be *water resistant*; and

(b) be continuous from the adjacent finished ground level—

(i) to a depth not less than 300 mm; or

(ii) for the full depth of the vertical edge of the concrete slab-on-ground.

Table J4D7: Floors – Minimum Total R-Value

Location	*Climate zone* 1— upwards heat flow	*Climate zones* 2 and 3 — upwards and downwards heat flow	*Climate zones* 4, 5, 6 and 7 — downwards heat flow	*Climate zone* 8 — downwards heat flow
A floor without an in-slab heating or cooling system	2.0	2.0	2.0	3.5
A floor with an in-slab heating or cooling system	3.25	3.25	3.25	4.75

Table Notes

For the purpose of calculating the *Total R-Value* of a floor, the sub-floor and soil *R-Value* must be calculated in accordance with Specification 39 or Section 3.5 of CIBSE Guide A.

Part J5 Building sealing

NT Part J5

Introduction to this Part

This Part contains *Deemed-to-Satisfy Provisions* for compliance with Part J1. It sets out provisions for the sealing of a building's *glazing*, doors, exhaust fans and the like in order to increase thermal comfort for occupants and reduce the energy consumption of any installed *air-conditioning* systems.

Notes

From 1 May 2023 to 30 September 2023 Section J of NCC 2019 Volume One Amendment 1 may apply instead of Section J of NCC 2022 Volume One. From 1 October 2023 Section J of NCC 2022 Volume One applies.

Notes: New South Wales Section J Energy Efficiency

(1) For a Class 2 building or a Class 4 part of a building, where a relevant *development consent* or an application for a complying development certificate requires compliance with a BASIX Single Dwelling or Multi Dwelling Certificate issued under Version 3.0 or earlier, NSW Section J of NCC 2019 Volume One Amendment 1 applies.

(2) For a Class 2 building or a Class 4 part of a building, where a relevant *development consent* or an application for a complying development certificate requires compliance with a BASIX Single Dwelling or Multi Dwelling Certificate issued under Version 4.0 or later, Section J of NCC 2022 Volume One applies.

(3) For a Class 2 building or a Class 4 part of a building, where a relevant *development consent* or an application for a complying development certificate requires compliance with a BASIX Alterations and Additions Certificate, NSW Section J of NCC 2019 Volume One Amendment 1 applies.

(4) For a Class 3 building or Class 5 to 9 building:

(i) From 1 May 2023 to 30 September 2023 NSW Section J of NCC 2019 Volume One Amendment 1 may apply instead of Section J of NCC 2022 Volume One.

(ii) From 1 October 2023 Section J of NCC 2022 Volume One applies.

Notes: Tasmania Section J Energy Efficiency

In Tasmania, for a Class 2 building and Class 4 part of a building, Section J is replaced with Section J of BCA 2019 Amendment 1.

Deemed-to-Satisfy Provisions

J5D1 Deemed-to-Satisfy Provisions

[2019: J3.0]

NSW J5D1(1)

(1) Where a *Deemed-to-Satisfy Solution* is proposed, *Performance Requirements* J1P1 to J1P4 are satisfied by complying with—

(a) J2D2; and

(b) J3D2 to J3D15; and

(c) J4D2 to J4D7; and

(d) J5D2 to J5D8; and

(e) J6D2 to J6D13; and

(f) J7D2 to J7D9; and

(g) J8D2 to J8D4; and

(h) J9D2 to J9D5.

(2) Where a *Performance Solution* is proposed, the relevant *Performance Requirements* must be determined in accordance with A2G2(3) and A2G4(3) as applicable.

NSW J5D2

J5D2 Application of Part

[2019: J3.1]

The *Deemed-to-Satisfy Provisions* of this Part apply to elements forming the *envelope* of a Class 2 to 9 building, other than—

(a) a building in *climate zones* 1, 2, 3 and 5 where the only means of *air-conditioning* is by using an evaporative cooler; or

(b) a permanent building opening, in a space where a gas appliance is located, that is necessary for the safe operation of a gas appliance; or

(c) a building or space where the mechanical ventilation *required* by Part F6 provides sufficient pressurisation to prevent infiltration.

J5D3 Chimneys and flues

[2019: J3.2]

The chimney or flue of an open solid-fuel burning appliance must be provided with a damper or flap that can be closed to seal the chimney or flue.

J5D4 Roof lights

[2019: J3.3]

(1) A *roof light* must be sealed, or capable of being sealed, when serving—

(a) a *conditioned space*; or

(b) a *habitable room* in *climate zones* 4, 5, 6, 7 or 8.

(2) A *roof light required* by (1) to be sealed, or capable of being sealed, must be constructed with—

(a) an imperforate ceiling diffuser or the like installed at the ceiling or internal lining level; or

(b) a weatherproof seal; or

(c) a shutter system readily operated either manually, mechanically or electronically by the occupant.

NSW J5D5

J5D5 Windows and doors

[2019: J3.4]

(1) A door, openable *window* or the like must be sealed—

(a) when forming part of the *envelope*; or

(b) in *climate zones* 4, 5, 6, 7 or 8.

(2) The requirements of (1) do not apply to—

(a) a *window* complying with AS 2047; or

(b) a fire door or smoke door; or

(c) a roller shutter door, roller shutter grille or other security door or device installed only for out-of-hours security.

(3) A seal to restrict air infiltration—

(a) for the bottom edge of a door, must be a draft protection device; and

(b) for the other edges of a door or the edges of an openable *window* or other such opening, may be a foam or rubber compression strip, fibrous seal or the like.

(4) An entrance to a building, if leading to a *conditioned space* must have an airlock, *self-closing* door, *rapid roller door*, revolving door or the like, other than—

(a) where the *conditioned space* has a *floor area* of not more than 50 m^2; or

(b) where a café, restaurant, open front shop or the like has—

(i) a 3 m deep un-conditioned zone between the main entrance, including an open front, and the *conditioned space*; and

(ii) at all other entrances to the café, restaurant, open front shop or the like, *self-closing* doors.

(5) A loading dock entrance, if leading to a *conditioned space*, must be fitted with a *rapid roller door* or the like.

J5D6 Exhaust fans

[2019: J3.5]

An exhaust fan must be fitted with a sealing device such as a self-closing damper or the like when serving—

(a) a *conditioned space*; or

(b) a *habitable room* in *climate zones* 4, 5, 6, 7 or 8.

J5D7 Construction of ceilings, walls and floors

[2019: J3.6]

(1) Ceilings, walls, floors and any opening such as a *window* frame, door frame, *roof light* frame or the like must be constructed to minimise air leakage in accordance with (2)—

(a) when forming part of the *envelope*; or

(b) in *climate zones* 4, 5, 6, 7 or 8.

(2) Construction *required* by (1) must be—

(a) enclosed by internal lining systems that are close fitting at ceiling, wall and floor junctions; or

(b) sealed at junctions and penetrations with—

(i) close fitting architrave, skirting or cornice; or

(ii) expanding foam, rubber compressible strip, caulking or the like.

(3) The requirements of (1) do not apply to openings, grilles or the like *required* for smoke hazard management.

J5D8 Evaporative coolers

[2019: J3.7]

An evaporative cooler must be fitted with a self-closing damper or the like—

(a) when serving a heated space; or

(b) in *climate zones* 4, 5, 6, 7 or 8.

Part J6 Air-conditioning and ventilation

NT Part J6

Introduction to this Part

This Part contains *Deemed-to-Satisfy Provisions* for compliance with Part J1. It sets out the provisions for the efficiency and control of *air-conditioning*, space heating and ventilation equipment, the efficiency, sealing and insulation requirements for ductwork systems containing fans, and for the efficiency and insulation of pipework and pump systems.

Notes

From 1 May 2023 to 30 September 2023 Section J of NCC 2019 Volume One Amendment 1 may apply instead of Section J of NCC 2022 Volume One. From 1 October 2023 Section J of NCC 2022 Volume One applies.

Notes: New South Wales Section J Energy Efficiency

(1) For a Class 2 building or a Class 4 part of a building, where a relevant *development consent* or an application for a complying development certificate requires compliance with a BASIX Single Dwelling or Multi Dwelling Certificate issued under Version 3.0 or earlier, NSW Section J of NCC 2019 Volume One Amendment 1 applies.

(2) For a Class 2 building or a Class 4 part of a building, where a relevant *development consent* or an application for a complying development certificate requires compliance with a BASIX Single Dwelling or Multi Dwelling Certificate issued under Version 4.0 or later, Section J of NCC 2022 Volume One applies.

(3) For a Class 2 building or a Class 4 part of a building, where a relevant *development consent* or an application for a complying development certificate requires compliance with a BASIX Alterations and Additions Certificate, NSW Section J of NCC 2019 Volume One Amendment 1 applies.

(4) For a Class 3 building or Class 5 to 9 building:

(i) From 1 May 2023 to 30 September 2023 NSW Section J of NCC 2019 Volume One Amendment 1 may apply instead of Section J of NCC 2022 Volume One.

(ii) From 1 October 2023 Section J of NCC 2022 Volume One applies.

Notes: Tasmania Section J Energy Efficiency

In Tasmania, for a Class 2 building and Class 4 part of a building, Section J is replaced with Section J of BCA 2019 Amendment 1.

Deemed-to-Satisfy Provisions

J6D1 Deemed-to-Satisfy Provisions

[2019: J5.0]

NSW J6D1(1)

(1) Where a *Deemed-to-Satisfy Solution* is proposed, *Performance Requirements* J1P1 to J1P4 are satisfied by complying with—

(a) J2D2; and

(b) J3D2 to J3D15; and

(c) J4D2 to J4D7; and

(d) J5D2 to J5D8; and

(e) J6D2 to J6D13; and

(f) J7D2 to J7D9; and

(g) J8D2 to J8D4; and

(h) J9D2 to J9D5.

(2) Where a *Performance Solution* is proposed, the relevant *Performance Requirements* must be determined in accordance with A2G2(3) and A2G4(3) as applicable.

NSW J6D2

J6D2 Application of Part

[2019: J5.1]

The *Deemed-to-Satisfy Provisions* of this Part do not apply to a Class 8 *electricity network substation*.

J6D3 Air-conditioning system control

[2019: J5.2]

(1) An *air-conditioning* system—

(a) must be capable of being deactivated when the building or part of a building served by that system is not occupied; and

(b) when serving more than one *air-conditioning* zone or area with different heating or cooling needs, must—

(i) thermostatically control the temperature of each zone or area; and

(ii) not control the temperature by mixing actively heated air and actively cooled air; and

(iii) limit reheating to not more than—

(A) for a fixed supply air rate, a 7.5 K rise in temperature; and

(B) for a variable supply air rate, a 7.5 K rise in temperature at the nominal supply air rate but increased or decreased at the same rate that the supply air rate is respectively decreased or increased; and

(c) which provides the *required* mechanical ventilation, other than in *climate zone* 1 or where dehumidification control is needed, must have an *outdoor air economy cycle* if the total air flow rate of any airside component of an *air-conditioning* system is greater than or equal to the flow rates in Table J6D3; and

(d) which contains more than one water heater, chiller or coil, must be capable of stopping the flow of water to those not operating; and

(e) with an airflow of more than 1000 L/s, must have a variable speed fan when its supply air quantity is capable of being varied; and

(f) when serving a *sole-occupancy unit* in a Class 3 building, must not operate when any external door of the *sole-occupancy unit* that opens to a balcony or the like, is open for more than one minute; and

(g) must have the ability to use direct signals from the control components responsible for the delivery of comfort conditions in the building to regulate the operation of central plant; and

(h) must have a control dead band of not less than 2°C, except where a smaller range is *required* for specialised applications; and

(i) must be provided with balancing dampers and balancing valves, as *required* to meet the needs of the system at its maximum operating condition, that ensure the maximum design air or fluid flow is achieved but not exceeded by more than 15% above design at each—

(i) component; or

(ii) group of components operating under a common control in a system containing multiple components; and

(j) must ensure that each independently operating space of more than 1 000 m^2 and every separate floor of the building has provision to terminate airflow independently of the remainder of the system sufficient to allow for different operating times; and

(k) must have automatic variable temperature operation of heated water and chilled water circuits; and

(l) when deactivated, must close any motorised outdoor air or return air damper that is not otherwise being actively controlled.

(2) When two or more *air-conditioning* systems serve the same space they must use control sequences that prevent the

systems from operating in opposing heating and cooling modes.

(3) Time switches — the following applies:

(a) A time switch must be provided to control—

(i) an *air-conditioning* system of more than 2 kWr; and

(ii) a heater of more than 1 $kW_{heating}$ used for *air-conditioning*.

(b) The time switch must be capable of switching electric power on and off at variable pre-programmed times and on variable pre-programmed days.

(c) The requirements of (a) and (b) do not apply to—

(i) an *air-conditioning* system that serves—

(A) only one *sole-occupancy unit* in a Class 2, 3 or 9c building; or

(B) a Class 4 part of a building; or

(ii) a *conditioned space* where *air-conditioning* is needed for 24 hour continuous use.

Table J6D3: Requirement for an outdoor air economy cycle

Climate zone	Total air flow rate *requiring* an economy cycle (L/s)
2	9000
3	7500
4	3500
5	3000
6	2000
7	2500
8	4000

J6D4 Mechanical ventilation system control

[2019: J5.3]

(1) General — A mechanical ventilation system, including one that is part of an *air-conditioning* system, except where the mechanical system serves only one *sole-occupancy unit* in a Class 2 building or serves only a Class 4 part of a building, must—

(a) be capable of being deactivated when the building or part of the building served by that system is not occupied; and

(b) when serving a *conditioned space*, except in periods when evaporative cooling is being used—

(i) where specified in Table J6D4, have—

(A) an energy reclaiming system that preconditions *outdoor air* at a minimum sensible heat transfer effectiveness of 60%; or

(B) demand control ventilation in accordance with AS 1668.2 if appropriate to the application; and

(ii) not exceed the minimum *outdoor air* quantity *required* by Part F6 by more than 20%, except where—

(A) additional unconditioned *outdoor air* is supplied for free cooling; or

(B) additional mechanical ventilation is needed to balance the *required* exhaust or process exhaust; or

(C) an energy reclaiming system preconditions all the *outdoor air*; and

(c) for an airflow of more than 1000 L/s, have a variable speed fan unless the downstream airflow is *required* by Part F6 to be constant.

(2) Exhaust systems — An exhaust system with an air flow rate of more than 1000 L/s must be capable of stopping the motor when the system is not needed, except for an exhaust system in a *sole-occupancy unit* in a Class 2, 3 or 9c building.

(3) *Carpark* exhaust systems — *Carpark* exhaust systems must have a control system in accordance with—

(a) clause 4.11.2 of AS 1668.2; or

(b) clause 4.11.3 of AS 1668.2.

(4) Time switches — The following applies:

(a) A time switch must be provided to a mechanical ventilation system with an air flow rate of more than 1000 L/s.

(b) The time switch must be capable of switching electric power on and off at variable pre-programmed times and on variable pre-programmed days.

(c) The requirements of (a) and (b) do not apply to—

(i) a mechanical ventilation system that serves—

(A) only one *sole-occupancy unit* in a Class 2, 3 or 9c building; or

(B) a Class 4 part of a building; or

(ii) a building where mechanical ventilation is needed for 24 hour occupancy.

Table J6D4: Required outdoor air treatment

Climate zone	*Outdoor air* flow (L/s)	*Required* measure
1	>500	Modulating control
2	Not applicable	No *required* measure
3	>1000	Modulating control
4 and 6	>500	Modulating control or energy reclaiming system
5	>1000	Modulating control or energy reclaiming system
7 and 8	>250	Modulating control or energy reclaiming system

J6D5 Fans and duct systems

[2019: J5.4]

(1) Fans, ductwork and duct components that form part of an *air-conditioning* system or mechanical ventilation system must—

(a) separately comply with (2), (3), (4) and (5); or

(b) achieve a fan motor input power per unit of flowrate lower than the fan motor input power per unit of flowrate achieved when applying (2), (3), (4) and (5) together.

(2) Fans:

(a) Fans in systems that have a static pressure of not more than 200 Pa must have an efficiency at the full load operating point not less than the efficiency calculated with the following formula:

$$\eta_{min} = 0.13 \times \ln(p) - 0.3$$

(b) In the formula at (a)—

(i) η_{min} = the minimum *required* system static efficiency for installation type A or C or the minimum *required* system total efficiency installation type B or D; and

(ii) p = the static pressure of the system (Pa); and

(iii) ln = natural logarithm.

(c) Fans in systems that have a static pressure above 200 Pa must have an efficiency at the full load operating point not less than the efficiency calculated with the following formula:

$$\eta_{min} = 0.85 \times (a \times \ln(P) - b + N)/100$$

(d) In the formula at (c)—

(i) η_{min} = the minimum *required* system static efficiency for installation type A or C or the minimum *required* system total efficiency installation type B or D; and

(ii) P = the motor input power of the fan (kW); and

(iii) N = the minimum performance grade obtained from Table J6D5a; and

(iv) a = regression coefficient a, obtained from Table J6D5b; and

(v) b = regression coefficient b, obtained from Table J6D5c; and

(vi) $\ln$ = natural logarithm.

(e) The requirements of (a), (b), (c) and (d) do not apply to fans that need to be explosion proof.

(3) Ductwork:

(a) The pressure drop in the index run across all straight sections of rigid ductwork and all sections of flexible ductwork must not exceed 1 Pa/m when averaged over the entire length of straight rigid duct and flexible duct. The pressure drop of flexible ductwork sections may be calculated as if the flexible ductwork is laid straight.

(b) Flexible ductwork must not account for more than 6 m in length in any duct run.

(c) The upstream connection to ductwork bends, elbows and tees in the index run must have an equivalent diameter to the connected duct.

(d) Turning vanes must be included in all rigid ductwork elbows of 90° or more acute than 90° in the index run except where—

(i) the inclusion of turning vanes presents a fouling risk; or

(ii) a long radius bend in accordance with AS 4254.2 is used.

(4) Ductwork components in the index run:

(a) The pressure drop across a coil must not exceed the value specified in Table J6D5d.

(b) A high efficiency particulate arrestance (HEPA) air filter must not exceed the higher of—

(i) a pressure drop of 200 Pa when clean; or

(ii) the filter design pressure drop when clean at an air velocity of 1.5 m/s.

(c) Any other air filter must not exceed—

(i) the pressure drop specified in Table J6D5e when clean; or

(ii) the filter design pressure drop when clean at an air velocity of 2.5 m/s.

(d) The pressure drop across intake louvres must not exceed the higher of—

(i) for single stage louvres, 30 Pa; and

(ii) for two stage louvres, 60 Pa; and

(iii) for acoustic louvres, 50 Pa; and

(iv) for other non-weatherproof louvres, 30 Pa.

(e) The pressure drop across a variable air volume box, with the damper in the fully open position, must not exceed—

(i) for units with electric reheat, 100 Pa; and

(ii) for other units, 25 Pa not including coil pressure losses.

(f) Rooftop cowls must not exceed a pressure drop of 30 Pa.

(g) Attenuators must not exceed a pressure drop of 40 Pa.

(h) Fire dampers must not exceed a pressure drop of 15 Pa when open.

(i) Balancing and control dampers in the index run must not exceed a pressure drop of 25 Pa when in the fully open position.

(j) Supply air diffusers and grilles must not exceed a pressure drop of 40 Pa.

(k) Exhaust grilles must not exceed a pressure drop of 30 Pa.

(l) Transfer ducts must not exceed a pressure drop of 12 Pa.

(m) Door grilles must not exceed a pressure drop of 12 Pa.

(n) Active chilled beams must not exceed a pressure drop of 150 Pa.

(5) The requirements of (1), (2), (3) and (4) do not apply to—

(a) fans in unducted *air-conditioning* systems with a supply air capacity of less than 1000 L/s; and

(b) smoke spill fans, except where also used for *air-conditioning* or ventilation; and

(c) the power for process-related components; and

(d) kitchen exhaust systems.

Table J6D5a: Minimum fan performance grade

Fan type	Installation type A or C	Installation type B or D
Axial — as a component of an air handling unit or fan coil unit	46.0	51.5
Axial — other	42.0	61.0
Mixed flow — as a component of an air handling unit or fan coil unit	46.0	51.5
Mixed flow — other	52.5	65.0
Centrifugal forward — curved	46.0	51.5
Centrifugal radial bladed	46.0	51.5
Centrifugal backward-curved	64.0	64.0

Table Notes

(1) Installation type A means an arrangement where the fan is installed with free inlet and outlet conditions.

(2) Installation type B means an arrangement where the fan is installed with a free inlet and a duct at its outlet.

(3) Installation type C means an arrangement where the fan is installed with a duct fitted to its inlet and with free outlet conditions.

(4) Installation type D means an arrangement where the fan is installed with a duct fitted to its inlet and outlet.

Table J6D5b: Fan regression coefficient a

Fan type	Fan motor input power < 10 kW	Fan motor input power ≥ 10 kW
Axial	2.74	0.78
Mixed flow	4.56	1.1
Centrifugal forward-curved	2.74	0.78
Centrifugal radial bladed	2.74	0.78
Centrifugal backward-curved	4.56	1.1

Table J6D5c: Fan regression coefficient b

Fan type	Fan motor input power < 10 kW	Fan motor input power ≥ 10 kW
Axial	6.33	1.88
Mixed flow	10.5	2.6
Centrifugal forward-curved	6.33	1.88
Centrifugal radial bladed	6.33	1.88
Centrifugal backward-curved	10.5	2.6

Table J6D5d: Maximum coil pressure drop

Number of rows	Maximum pressure drop (Pa)
1	30

Number of rows	Maximum pressure drop (Pa)
2	50
4	90
6	130
8	175
10	220

Table J6D5e: Maximum clean filter pressure drop

Filter minimum efficiency reporting value	Maximum pressure drop (Pa)
9	55
11	65
13	95
14	110

J6D6 Ductwork insulation

[2019: J5.5]

(1) Ductwork and fittings in an *air-conditioning* system must be provided with insulation—
  (a) complying with AS/NZS 4859.1; and
  (b) having an insulation *R-Value* greater than or equal to—
    (i) for flexible ductwork, 1.0; or
    (ii) for cushion boxes, that of the connecting ductwork; or
    (iii) that specified in Table J6D6.

(2) Insulation must—
  (a) be protected against the effects of weather and sunlight; and
  (b) be installed so that it—
    (i) abuts adjoining insulation to form a continuous barrier; and
    (ii) maintains its position and thickness, other than at flanges and supports; and
  (c) when conveying cooled air—
    (i) be protected by a vapour barrier on the outside of the insulation; and
    (ii) where the vapour barrier is a membrane, be installed so that adjoining sheets of the membrane—
      (A) overlap by at least 50 mm; and
      (B) are bonded or taped together.

(3) The requirements of (1) do not apply to—
  (a) ductwork and fittings located within the only or last room served by the system; or
  (b) fittings that form part of the interface with the *conditioned space*; or
  (c) return air ductwork in, or passing through, a *conditioned space*; or
  (d) ductwork for *outdoor air* and exhaust air associated with an *air-conditioning* system; or
  (e) the floor of an in-situ air-handling unit; or
  (f) packaged air conditioners, split systems, and variable refrigerant flow *air-conditioning* equipment complying with *MEPS*; or
  (g) flexible fan connections.

(4) For the purposes of (1), (2) and (3), fittings—
  (a) include non-active components of a ductwork system such as cushion boxes; and

(b) exclude active components such as air-handling unit components.

Table J6D6: Ductwork and fittings – Minimum insulation R-Value

Location of ductwork and fittings	*Climate zone* 1, 2, 3, 4, 5, 6 or 7	*Climate zone* 8
Within a conditioned space	1.2	2.0
Where exposed to direct sunlight	3.0	3.0
All other locations	2.0	3.0

J6D7 Ductwork sealing

[2019: J5.6]

Ductwork in an *air-conditioning* system with a capacity of 3000 L/s or greater, not located within the only or last room served by the system, must be sealed against air loss in accordance with the duct sealing requirements of AS 4254.1 and AS 4254.2 for the static pressure in the system.

J6D8 Pump systems

[2019: J5.7]

(1) General — Pumps and pipework that form part of an *air-conditioning* system must either—

(a) separately comply with (2), (3) and (4); or

(b) achieve a pump motor power per unit of flowrate lower than the pump motor power per unit of flowrate achieved when applying (2), (3) and (4) together.

(2) Circulator pumps — A glandless impeller pump, with a rated hydraulic power output of less than 2.5 kW and that is used in closed loop systems must have an energy efficiency index (EEI) not more than 0.27 calculated in accordance with European Union Commission Regulation No. 622/2012.

(3) Other pumps — Pumps that are in accordance with Articles 1 and 2 of European Union Commission Regulation No. 547/2012 must have a minimum efficiency index (MEI) of 0.4 or more when calculated in accordance with European Union Commission Regulation No. 547/2012.

(4) Pipework — Straight segments of pipework along the index run, forming part of an *air-conditioning* system—

(a) in pipework systems that do not have branches and have the same flow rate throughout the entire pipe network, must achieve an average pressure drop of not more than—

(i) for constant speed systems, the values nominated in Table J6D8a; or

(ii) for variable speed systems, the values nominated in Table J6D8b; or

(b) in any other pipework system, must achieve an average pressure drop of not more than—

(i) for constant speed systems, the values nominated in Table J6D8c; or

(ii) for variable speed systems, the values nominated in Table J6D8d.

(5) The requirements of (4) do not apply—

(a) to valves and fittings; or

(b) where the smallest pipe size compliant with (4) results in a velocity of 0.7 m/s or less at design flow.

Table J6D8a: Maximum pipework pressure drop – Non-distributive constant speed systems

Nominal pipe diameter (mm)	Maximum pressure drop in systems operating 5000 hours/annum or less (Pa/m)	Maximum pressure drop in systems operating more than 5000 hours/annum (Pa/m)
Not more than 20	400	400
25	400	400
32	400	400

Nominal pipe diameter (mm)	Maximum pressure drop in systems operating 5000 hours/annum or less (Pa/m)	Maximum pressure drop in systems operating more than 5000 hours/annum (Pa/m)
40	400	400
50	400	350
65	400	350
80	400	350
100	400	200
125	400	200
150 or more	400	200

Table J6D8b: Maximum pipework pressure drop – Non-distributive variable speed systems

Nominal pipe diameter (mm)	Maximum pressure drop in systems operating 5000 hours/annum or less (Pa/m)	Maximum pressure drop in systems operating more than 5000 hours/annum (Pa/m)
Not more than 20	400	400
25	400	400
32	400	400
40	400	400
50	400	400
65	400	400
80	400	400
100	400	300
125	400	300
150 or more	400	300

Table J6D8c: Maximum pipework pressure drop – Distributive constant speed systems

Nominal pipe diameter (mm)	Maximum pressure drop in systems operating 2000 hours/annum or less (Pa/m)	Maximum pressure drop in systems operating between 2000 hours/annum and 5000 hrs/yr (Pa/m)	Maximum pressure drop in systems operating more than 5000 hours/annum (Pa/m)
Not more than 20	400	300	150
25	400	220	100
32	400	220	100
40	400	220	100
50	400	220	100
65	400	400	170
80	400	400	170
100	400	400	170
125	400	400	170
150 or more	400	400	170

Table J6D8d: Maximum pipework pressure drop – Distributive variable speed systems

Nominal pipe diameter (mm)	Maximum pressure drop in systems operating 5000 hours/annum or less (Pa/m)	Maximum pressure drop in systems operating more than 5000 hours/annum (Pa/m)
Not more than 20	400	250
25	400	180
32	400	180
40	400	180
50	400	180
65	400	300
80	400	300
100	400	300
125	400	300
150 or more	400	300

J6D9 Pipework insulation

[2019: J5.8]

(1) *Piping*, vessels, heat exchangers and tanks containing heating or cooling fluid, where the fluid is held at a heated or cooled temperature, that are part of an *air-conditioning* system, other than in appliances covered by *MEPS*, must be provided with insulation—

(a) complying with AS/NZS 4859.1; and

(b) for *piping* of heating and cooling fluids, having an insulation *R-Value* in accordance with Table J6D9a; and

(c) for vessels, heat exchangers or tanks, having an insulation *R-Value* in accordance with Table J6D9b; and

(d) for refill or pressure relief *piping*, having an insulation *R-Value* equal to the *required* insulation *R-Value* of the connected pipe, vessel or tank within 500 mm of the connection.

(2) Insulation must—

(a) be protected against the effects of weather and sunlight; and

(b) be able to withstand the temperatures within the *piping*, vessel, heat exchanger or tank.

(3) Insulation provided to *piping*, vessels, heat exchangers or tanks containing cooling fluid must be protected by a vapour barrier on the outside of the insulation.

(4) The requirements of (1) and (2) do not apply to *piping*, vessels or heat exchangers—

(a) located within the only or last room served by the system and downstream of the control device for the regulation of heating or cooling service to that room; or

(b) encased within a concrete slab or panel which is part of a heating or cooling system; or

(c) supplied as an integral part of a chiller, *boiler* or unitary air-conditioner complying with the requirements of J6D10, J6D11 and J6D12; or

(d) inside an air-handling unit, fan-coil unit, or the like.

(5) For the purposes of (1), (2), (3) and (4)—

(a) heating fluids include refrigerant, heated water, steam and condensate; and

(b) cooling fluids include refrigerant, chilled water, brines and glycol mixtures, but do not include condenser cooling water.

Table J6D9a: Piping — Minimum insulation R-Value

Fluid temperature	Minimum insulation *R-Value* nominal pipe diameter ≤ 40 mm	Minimum insulation *R-Value* — nominal pipe diameter > 40 mm and ≤ 80 mm	Minimum insulation *R-Value* — nominal pipe diameter between > 80 mm and ≤ 150 mm	Minimum insulation *R-Value* — nominal pipe diameter > 150 mm
Low temperature chilled — ≤ 2°C	1.3	1.7	2.0	2.7
Chilled — > 2°C but ≤ 20°C	1.0	1.5	2.0	2.0
Heated — > 30°C but ≤ 85°C	1.7	1.7	1.7	1.7
High Temperature heated — > 85°C	2.7	2.7	2.7	2.7

Table Notes

The minimum *required R-Value* may be halved for *piping* penetrating a structural member.

Table J6D9b: Vessels, heat exchangers and tanks — Minimum insulation R-Value

Fluid temperature range	Minimum insulation *R-Value*
Low temperature chilled — ≤ 2°C	2.7
Chilled — > 2°C but ≤ 20°C	1.8
Heated — > 30°C but ≤ 85°C	3.0
High temperature heated — > 85°C	3.0

J6D10 Space heating

[2019: J5.9]

(1) A heater used for *air-conditioning* or as part of an *air-conditioning* system must be—

(a) a solar heater; or

(b) a gas heater; or

(c) a heat pump heater; or

(d) a heater using reclaimed heat from another process such as reject heat from a refrigeration plant; or

(e) an electric heater if—

(i) the heating capacity is not more than—

(A) 10 W/m^2 of the *floor area* of the *conditioned space* in *climate zone* 1; or

(B) 40 W/m^2 of the *floor area* of the *conditioned space* in *climate zone* 2; or

(C) the value specified in Table J6D10 where reticulated gas is not available at the allotment boundary; or

(ii) the annual energy consumption for heating is not more than 15 kWh/m^2 of the *floor area* of the *conditioned space* in *climate zones* 1, 2, 3, 4 and 5; or

(iii) the in-duct heater complies with J6D3(1)(b)(iii); or

(f) any combination of (a) to (e).

NSW J6D10(2)

(2) An electric heater may be used for heating a bathroom in a Class 2, 3, 9a or 9c building if the heating capacity is not more than 1.2 kW and the heater has a timer.

(3) A fixed heating or cooling appliance that moderates the temperature of an outdoor space must be configured to automatically shut down when—

(a) there are no occupants in the space served; or

(b) a period of one hour has elapsed since the last activation of the heater; or

(c) the space served has reached the design temperature.

(4) A gas water heater, that is used as part of an *air-conditioning* system, must—

(a) if rated to consume 500 MJ/hour of gas or less, achieve a minimum gross thermal efficiency of 86%; or

(b) if rated to consume more than 500 MJ/hour of gas, achieve a minimum gross thermal efficiency of 90%.

Table J6D10: Maximum electric heating capacity

Floor area of the *conditioned space*	W/m^2 of *floor area* in *climate zone* 3	W/m^2 of *floor area* in *climate zone* 4	W/m^2 of *floor area* in *climate zone* 5	W/m^2 of *floor area* in *climate zone* 6	W/m^2 of *floor area* in *climate zone* 7
≤ 500 m^2	50	60	55	65	70
> 500 m^2	40	50	45	55	60

J6D11 Refrigerant chillers

[2019: J5.10]

An *air-conditioning* system refrigerant chiller must comply with *MEPS* and the full load operation energy efficiency ratio and integrated part load energy efficiency ratio in Table J6D11a or Table J6D11b when determined in accordance with AHRI 551/591.

Table J6D11a: Minimum energy efficiency ratio for refrigerant chillers – Option 1

Chiller type	Full load operation ($W_r/W_{input\ power}$)	Integrated part load ($W_r/W_{input\ power}$)
Air-cooled chiller with a capacity ≤ 528 kWr	2.985	4.048
Air-cooled chiller with a capacity > 528 kWr	2.985	4.137
Water-cooled positive displacement chiller with a capacity ≤ 264 kWr	4.694	5.867
Water-cooled positive displacement chiller with a capacity > 264 kWr but ≤ 528 kWr	4.889	6.286
Water-cooled positive displacement chiller with a capacity > 528 kWr but ≤ 1055 kWr	5.334	6.519
Water-cooled positive displacement chiller with a capacity > 1055 kWr but ≤ 2110 kWr	5.800	6.770
Water-cooled positive displacement chiller with a capacity > 2110 kWr	6.286	7.041
Water-cooled centrifugal chiller with a capacity ≤ 528 kWr	5.771	6.401
Water-cooled centrifugal chiller with a capacity > 528 kWr but ≤ 1055 kWr	5.771	6.519
Water-cooled centrifugal chiller with a capacity > 1055 kWr but ≤ 1407 kWr	6.286	6.770
Water-cooled centrifugal chiller with a capacity > 1407 kWr	6.286	7.041

Table J6D11b: Minimum energy efficiency ratio for refrigerant chillers – Option 2

Chiller type	Full load operation ($W_r/W_{input\ power}$)	Integrated part load ($W_r/W_{input\ power}$)
Air-cooled chiller with a capacity ≤ 528 kWr	2.866	4.669
Air-cooled chiller with a capacity > 528 kWr	2.866	4.758
Water-cooled positive displacement chiller with a capacity ≤ 264 kWr	4.513	7.041
Water-cooled positive displacement chiller with a capacity > 264 kWr but ≤ 528 kWr	4.694	7.184
Water-cooled positive displacement chiller with a capacity > 528 kWr but ≤ 1055 kWr	5.177	8.001
Water-cooled positive displacement chiller with a capacity > 1055 kWr but ≤ 2110 kWr	5.633	8.586
Water-cooled positive displacement chiller with a capacity > 2110 kWr	6.018	9.264
Water-cooled centrifugal chiller with a capacity ≤ 528 kWr	5.065	8.001
Water-cooled centrifugal chiller with a capacity > 528 kWr but ≤ 1055 kWr	5.544	8.001
Water-cooled centrifugal chiller with a capacity > 1055 kWr but ≤ 1407 kWr	5.917	9.027
Water-cooled centrifugal chiller with a capacity > 1407 kWr	6.018	9.264

J6D12 Unitary air-conditioning equipment

[2019: J5.11]

Unitary *air-conditioning* equipment including packaged air-conditioners, split systems, and variable refrigerant flow systems must comply with *MEPS* and for a capacity greater than or equal to 65 kWr—

(a) where water cooled, have a minimum energy efficiency ratio of 4.0 $W_r/W_{input\ power}$ for cooling when tested in accordance with AS/NZS 3823.1.2 at test condition T1, where input power includes both compressor and fan input power; or

(b) where air cooled, have a minimum energy efficiency ratio of 2.9 $W_r/W_{input\ power}$ for cooling when tested in accordance with AS/NZS 3823.1.2 at test condition T1, where input power includes both compressor and fan input power.

J6D13 Heat rejection equipment

[2019: J5.12]

(1) The motor rated power of a fan in a cooling tower, closed circuit cooler or evaporative condenser must not exceed the allowances in Table J6D13.

(2) The fan in an air-cooled condenser must have a motor rated power of not more than 42 W for each kW of heat rejected from the refrigerant, when determined in accordance with AHRI 460 except for—

(a) a refrigerant chiller in an *air-conditioning* system that complies with the energy efficiency ratios in J6D11; or

(b) packaged air-conditioners, split systems, and variable refrigerant flow *air-conditioning* equipment that complies with the energy efficiency ratios in J6D12.

Table J6D13: Maximum fan motor power – Cooling towers, closed circuit coolers and evaporative condensers

Type	Cooling tower maximum fan motor input power (W/kW_{rej})	Closed circuit cooler maximum fan motor input power (W/kW_{rej})	Evaporative condenser maximum fan motor input power (W/kW_{rej})
Induced draft	10.4	16.9	11.0
Forced draft	19.5	Note	11.0

Table Notes

A closed circuit, forced draft cooling tower must not be used.

Part J7 Artificial lighting and power

NT Part J7

Introduction to this Part

This Part contains Deemed-to-Satisfy Provisions for compliance with Part J1. It sets out provisions for the design and configuration of artificial lighting and power, boiling and chilled water units, lifts and escalators and moving walkways.

Notes

From 1 May 2023 to 30 September 2023 Section J of NCC 2019 Volume One Amendment 1 may apply instead of Section J of NCC 2022 Volume One. From 1 October 2023 Section J of NCC 2022 Volume One applies.

Notes: New South Wales Section J Energy Efficiency

(1) For a Class 2 building or a Class 4 part of a building, where a relevant *development consent* or an application for a complying development certificate requires compliance with a BASIX Single Dwelling or Multi Dwelling Certificate issued under Version 3.0 or earlier, NSW Section J of NCC 2019 Volume One Amendment 1 applies.

(2) For a Class 2 building or a Class 4 part of a building, where a relevant *development consent* or an application for a complying development certificate requires compliance with a BASIX Single Dwelling or Multi Dwelling Certificate issued under Version 4.0 or later, Section J of NCC 2022 Volume One applies.

(3) For a Class 2 building or a Class 4 part of a building, where a relevant *development consent* or an application for a complying development certificate requires compliance with a BASIX Alterations and Additions Certificate, NSW Section J of NCC 2019 Volume One Amendment 1 applies.

(4) For a Class 3 building or Class 5 to 9 building:

(i) From 1 May 2023 to 30 September 2023 NSW Section J of NCC 2019 Volume One Amendment 1 may apply instead of Section J of NCC 2022 Volume One.

(ii) From 1 October 2023 Section J of NCC 2022 Volume One applies.

Notes: Tasmania Section J Energy Efficiency

In Tasmania, for a Class 2 building and Class 4 part of a building, Section J is replaced with Section J of BCA 2019 Amendment 1.

Deemed-to-Satisfy Provisions

J7D1 Deemed-to-Satisfy Provisions

[2019: J6.0]

NSW J7D1(1)

(1) Where a *Deemed-to-Satisfy Solution* is proposed, *Performance Requirements* J1P1 to J1P4 are satisfied by complying with—

(a) J2D2; and

(b) J3D2 to J3D15; and

(c) J4D2 to J4D7; and

(d) J5D2 to J5D8; and

(e) J6D2 to J6D13; and

(f) J7D2 to J7D9; and

(g) J8D2 to J8D4; and

(h) J9D2 to J9D5.

(2) Where a *Performance Solution* is proposed, the relevant *Performance Requirements* must be determined in accordance with A2G2(3) and A2G4(3) as applicable.

NSW J7D2

J7D2 Application of Part

[2019: J6.1]

J7D3, J7D4 and J7D6(1)(b) do not apply to a Class 8 *electricity network substation*.

J7D3 Artificial lighting

[2019: J6.2]

NSW J7D3(1)

(1) In a *sole-occupancy unit* of a Class 2 building or a Class 4 part of a building—

(a) the *lamp power density* or *illumination power density* of artificial lighting must not exceed the allowance of—

(i) 5 W/m^2 within a *sole-occupancy unit*; and

(ii) 4 W/m^2 on a verandah, balcony or the like attached to a *sole-occupancy unit*; and

(b) the *illumination power density* allowance in (a) may be increased by dividing it by the *illumination power density* adjustment factor for a control device in Table J7D3b as applicable; and

(c) when designing the *lamp power density* or *illumination power density*, the power of the proposed installation must be used rather than nominal allowances for exposed batten holders or luminaires; and

(d) halogen lamps must be separately switched from fluorescent lamps.

NSW J7D3(2)

(2) In a building other than a *sole-occupancy unit* of a Class 2 building or a Class 4 part of a building—

(a) for artificial lighting, the aggregate design illumination power load must not exceed the sum of the allowances obtained by multiplying the area of each space by the maximum *illumination power density* in Table J7D3a; and

(b) the aggregate design illumination power load in (a) is the sum of the design illumination power loads in each of the spaces served; and

(c) where there are multiple lighting systems serving the same space, the design illumination power load for (b) is—

(i) the total illumination power load of all systems; or

(ii) where a control system permits only one system to operate at a time based on the highest illumination power load; or determined by the formula—

$$[H \times T/2 + P \times (100 - T/2]/100$$

(d) In the formula at (c)(ii)—

(i) H = the highest illumination power load; and

(ii) T = the time for which the maximum illumination power load will occur, expressed as a percentage; and

(iii) P = the predominant illumination power load.

(3) The requirements of (1) and (2) do not apply to the following:

(a) Emergency lighting provided in accordance with Part E4.

(b) Signage, display lighting within cabinets and display cases that are fixed in place.

(c) Lighting for accommodation within the residential part of a *detention centre*.

(d) A heater where the heater also emits light, such as in bathrooms.

(e) Lighting of a specialist process nature such as in a surgical operating theatre, fume cupboard or clean workstation.

(f) Lighting of performances such as theatrical or sporting.

(g) Lighting for the permanent display and preservation of works of art or objects in a museum or gallery other than for retail sale, purchase or auction.

(h) Lighting installed solely to provide photosynthetically active radiation for indoor plant growth on green walls and the like.

(4) For the purposes of Table J7D3b, the following control devices must comply with Specification 40:

(a) Lighting timers.

(b) Motion detectors.

(c) Daylight sensors and dynamic lighting control devices.

Table J7D3a: Maximum illumination power density

Space	Maximum *illumination power density* (W/m^2)
Auditorium, church and public hall	8
Board room and conference room	5
Carpark - general	2
Carpark - entry zone (first 15 m of travel) during the daytime	11.5
Carpark - entry zone (next 4 m of travel) during the day	2.5
Carpark - entry zone (first 20 m of travel) during night time	2.5
Common rooms, spaces and corridors in a Class 2 building	4.5
Control room, switch room and the like - intermittent monitoring	3
Control room, switch room and the like - constant monitoring	4.5
Corridors	5
Courtroom	4.5
Dormitory of a Class 3 building used for sleeping only	3
Dormitory of a Class 3 building used for sleeping and study	4
Entry lobby from outside the building	9
Health-care - infants' and children's wards and emergency department	4
Health-care - examination room	4.5
Health-care - examination room in intensive care and high dependency ward	6
Health-care - all other *patient care areas* including wards and corridors	2.5
Kitchen and food preparation area	4
Laboratory - artificially lit to an ambient level of 400 lx or more	6
Library - stack and shelving area	2.5
Library - reading room and general areas	4.5
Lounge area for communal use in a Class 3 or 9c building	4.5
Museum and gallery - circulation, cleaning and service lighting	2.5
Office - artificially lit to an ambient level of 200 lx or more	4.5
Office - artificially lit to an ambient level of less than 200 lx	2.5

Space	Maximum *illumination power density* (W/m^2)
Plant room where an average of 160 lx vertical illuminance is required on a vertical panel such as in switch rooms	4
Plant rooms with a horizontal illuminance target of 80 lx	2
Restaurant, café, bar, hotel lounge and a space for the serving and consumption of food or drinks	14
Retail space including a museum and gallery whose purpose is the sale of objects	14
School - general purpose learning areas and tutorial rooms	4.5
Sole-occupancy unit of a Class 3 or 9c building	5
Storage	1.5
Service area, cleaner's room and the like	1.5
Toilet, locker room, staff room, rest room and the like	3
Wholesale storage area with a vertical illuminance target of 160 lx	4
Stairways, including *fire-isolated stairways*	2
Lift cars	3

Table Notes

(1) In areas not listed above, the maximum *illumination power density* is—

(i) for an illuminance not more than 80 lx, 2 W/m^2; and

(ii) for an illuminance more than 80 lx and not more than 160 lx, 2.5 W/m^2; and

(iii) for an illuminance more than 160 lx and not more than 240 lx, 3 W/m^2; and

(iv) for an illuminance more than 240 lx and not more than 320 lx, 4.5 W/m^2; and

(v) for an illuminance more than 320 lx and not more than 400 lx, 6 W/m^2; and

(vi) for an illuminance more than 400 lx and not more than 600 lx, 10 W/m^2; and

(vii) for an illuminance more than 600 lx and not more than 800 lx, 11.5 W/m^2.

(2) For enclosed spaces with a Room Aspect Ratio of less than 1.5, the maximum *illumination power density* may be increased by dividing it by an adjustment factor for room aspect which is 0.5 + (Room Aspect Ratio/3).

(3) The Room Aspect Ratio of the enclosed space is determined by the formula: A/(H x C), where—

(i) A is the area of the enclosed space; and

(ii) H is the height of the space measured from the floor to the highest part of the ceiling; and

(iii) C is the perimeter of the enclosed space at floor level.

(4) In addition to 2, the maximum *illumination power density* may be increased by dividing it by the *illumination power density* adjustment factor in Table J7D3b and Table J7D3c and where the control device is not installed to comply with J6D4.

(5) Circulation spaces are included in the allowances listed in the Table.

Table J7D3b: Illumination power density adjustment factor for a control device

Item Notes 1 and 2	Description	*illumination power density* adjustment factor
Motion detector	In a toilet or change room, other than a public toilet, in a Class 6 building	0.4
Motion detector	Where a group of light fittings serving less than 100 m^2 is controlled by one or more detectors	0.6

Item Notes 1 and 2	Description	*illumination power density* adjustment factor
Motion detector	Where a group of light fittings serving 100 m^2 or more is controlled by one or more detectors	0.7
Programmable dimming system Note 3	Where not less than 75% of the area of a space is controlled by programmable dimmers	0.85
Fixed dimming Notes 3 and 4	All fittings with fixed dimming	Whichever is greater of (a) 0.5; or (b) 0.2+0.8L where L = the illuminance turndown for the fixed dimming.
Lumen depreciation dimming Note 3	All fittings with lumen depreciation dimming	0.85
Two stage sensor - equipped lights with minimum power of 30 % of peak power or less	Fire stairs and other spaces not used for regular transit	0.4
Two stage sensor - equipped lights with minimum power of 30% of peak power or less	Transitory spaces in regular use or in a *carpark*	0.7
Daylight sensor and dynamic lighting control device - dimmed or stepped switching of lights adjacent *windows* Notes 3 and 5	In a Class 5, 6, 7, 8 or 9b building or a Class 9a building, other than a *ward area*, where the lights are adjacent *windows*, other than *roof lights*, for a distance from the *window* equal to the depth of the floor to *window* head height	0.5 Note 3
Daylight sensor and dynamic lighting control device - dimmed or stepped switching of lights adjacent *windows* Notes 3 and 5	Serving a Class 3 or 9c building, or a Class 9a *ward area*, where the lights are adjacent *windows*, other than *roof lights*, for a distance from the *window* equal to the depth of the floor to *window* head height	0.75 Note 3
Daylight sensor and dynamic lighting control device - dimmed or stepped switching of lights adjacent *windows* Notes 3 and 5	In a Class 5, 6, 7, 8 or 9b building or a Class 9a building, other than a *ward area*, where the lights are adjacent *roof lights*	0.6 Note 3
Daylight sensor and dynamic lighting control device - dimmed or stepped switching of lights adjacent *windows* Notes 3 and 5	In a Class 3 or 9c building, or a Class 9a *ward area*, where the lights are adjacent *roof lights*	0.8 Note 3

Table Notes

(1) A maximum of two *illumination power density* adjustment factors for a control device can be applied to an area.

(2) Where more than one *illumination power density* adjustment factor (other than for room aspect) applies to an area, they are to be combined using the following formula: A x (B + [(1 - B)/2]), where—

(i) A is the lowest applicable *illumination power density* adjustment factor; and

(ii) B is the second lowest applicable *illumination power density* adjustment factor.

(3) The adjustment factor does not apply to tungsten, halogen or other incandescent sources.

(4) Includes luminaires with a pre-programmed function which provides dimming from ON to OFF (one-stage dimming).

(5) The *illumination power density* adjustment factor is only applied to lights controlled by daylight sensors between 8:00 am and 7:00 pm.

Table J7D3c: Illumination power density adjustment factor for light colour

Light source	Description	*Illumination power density* adjustment factor
CRI ≥ 90	Where lighting with good colour rendering is used	0.9
CCT ≤ 3500 K [Note]	Where lighting with a warm appearance is used	0.8
CCT ≥ 4500 K	Where lighting with a cool appearance is used	1.1

Table Notes

Includes luminaires that can adjust their CCT to 3500 K or below.

J7D4 Interior artificial lighting and power control

[2019: J6.3]

(1) All artificial lighting of a room or space must be individually operated by–

(a) a switch; or

(b) other control device; or

(c) a combination of (a) and (b).

(2) An occupant activated device, such as a room security device, a motion detector in accordance with Specification 40, or the like, must be provided in the *sole-occupancy unit* of a Class 3 building, other than where providing accommodation for people with a disability or the aged, to cut power to the artificial lighting, air-conditioner, local exhaust fans and bathroom heater when the *sole-occupancy unit* is unoccupied.

(3) An artificial lighting switch or other control device in (1) must—

(a) if an artificial lighting switch, be located in a visible and easily accessed position—

(i) in the room or space being switched; or

(ii) in an adjacent room or space from where 90% of the lighting being switched is visible; and

(b) for other than a single functional space such as an auditorium, theatre, *swimming pool*, sporting stadium or warehouse—

(i) if in a Class 5 building or a Class 8 laboratory, not operate lighting for an area of more than 250 m^2; or

(ii) if in a Class 3, 6, 7, 8 (other than a laboratory) or 9 building, not operate lighting for an area of more than—

(A) 250 m^2 for a space of not more than 2000 m^2; or

(B) 1000 m^2 for a space of more than 2000 m^2.

NSW J7D4(4)

(4) 95% of the light fittings in a building or *storey* of a building, other than a Class 2 or 3 building or a Class 4 part of a building, of more than 250 m^2 must be controlled by—

(a) a time switch in accordance with Specification 40; or

(b) an occupant sensing device such as—

(i) a security key card reader that registers a person entering and leaving the building; or

(ii) a motion detector in accordance with Specification 40.

(5) In a Class 5, 6 or 8 building of more than 250 m^2, artificial lighting in a natural lighting zone adjacent to *windows* must be separately controlled from artificial lighting not in a natural lighting zone in the same *storey* except where—

(a) the room containing the natural lighting zone is less than 20 m^2; or

(b) the room's natural lighting zone contains less than 4 luminaires; or

(c) 70% or more of the luminaires in the room are in the natural lighting zone.

(6) Artificial lighting in a *fire-isolated stairway*, *fire-isolated passageway* or *fire-isolated ramp*, must be controlled by a

motion detector in accordance with Specification 40.

(7) Artificial lighting in a foyer, corridor and other circulation spaces—

(a) of more than 250 W within a single zone; and

(b) adjacent to *windows*,

must be controlled by a daylight sensor and dynamic lighting control device in accordance with Specification 40.

(8) Artificial lighting for daytime travel in the first 19 m of travel in a *carpark* entry zone must be controlled by a daylight sensor in accordance with Specification 40.

(9) The requirements of (1), (2), (3), (4), (5), (6), (7) and (8) do not apply to the following:

(a) Emergency lighting in accordance with Part E4.

(b) Where artificial lighting is needed for 24 hour occupancy such as for a manufacturing process, parts of a hospital, an airport control tower or within a *detention centre*.

(10) The requirements of (4) do not apply to the following:

(a) Artificial lighting in a space where the sudden loss of artificial lighting would cause an unsafe situation such as—

(i) in a *patient care area* in a Class 9a building or in a Class 9c building; or

(ii) a plant room or lift motor room; or

(iii) a workshop where power tools are used.

(b) A heater where the heater also emits light, such as in bathrooms.

J7D5 Interior decorative and display lighting

[2019: J6.4]

(1) Interior decorative and display lighting, such as for a foyer mural or art display, must be controlled—

(a) separately from other artificial lighting; and

(b) by a manual switch for each area other than when the operating times of the displays are the same in a number of areas such as in a museum, art gallery or the like, in which case they may be combined; and

(c) by a time switch in accordance with Specification 40 where the display lighting exceeds 1 kW.

(2) Window display lighting must be controlled separately from other display lighting.

J7D6 Exterior artificial lighting

[2019: J6.5]

(1) Exterior artificial lighting attached to or directed at the facade of a building, must—

(a) be controlled by—

(i) a daylight sensor; or

(ii) a time switch that is capable of switching on and off electric power to the system at variable pre-programmed times and on variable pre-programmed days; and

(b) when the total lighting load exceeds 100 W—

(i) use LED luminaires for 90% of the total lighting load; or

(ii) be controlled by a motion detector in accordance with Specification 40; or

(iii) when used for decorative purposes, such as façade lighting or signage lighting, have a separate time switch in accordance with Specification 40.

(2) The requirements of (1)(b) do not apply to the following:

(a) Emergency lighting in accordance with Part E4.

(b) Lighting around a *detention centre*.

J7D7 Boiling water and chilled water storage units

[2019: J6.6]

Power supply to a boiling water or chilled water storage unit must be controlled by a time switch in accordance with Specification 40.

J7D8 Lifts

[2019: J6.7]

Lifts must—

(a) be configured to ensure artificial lighting and ventilation in the car are turned off when it is unused for 15 minutes; and

(b) achieve the idle and standby energy performance level in Table J7D8a; and

(c) achieve—

(i) the energy efficiency class in Table J7D8b; or

(ii) if a dedicated goods lift, energy efficiency class D in accordance with ISO 25745-2.

Table J7D8a: Lift idle and standby energy performance level

Rated load	Idle and standby energy performance level in accordance with ISO 25745-2 Note
Less than or equal to 800 kg	2
801 kg to less than or equal to 2000 kg	3
2001 kg to less than or equal to 4000 kg	4
Greater than 4000 kg	5

Table Notes

Applies to the standby power used after 30 minutes.

Table J7D8b: Lift energy efficiency class

Usage category in accordance with ISO 25745-2	Energy efficiency class in accordance with ISO 25745-2
1-4	C
> 5	D

J7D9 Escalators and moving walkways

[2019: J6.8]

Escalators and moving walkways must have the ability to slow to between 0.2 m/s and 0.05 m/s when unused for more than 15 minutes.

Part J8 Heated water supply and swimming pool and spa pool plant

NT Part J8

Introduction to this Part

This Part contains *Deemed-to-Satisfy Provisions* for compliance with Part J1. It sets out provisions for ensuring water heaters, *swimming pool* and spa heaters and pump systems use energy efficiently.

Notes

From 1 May 2023 to 30 September 2023 Section J of NCC 2019 Volume One Amendment 1 may apply instead of Section J of NCC 2022 Volume One. From 1 October 2023 Section J of NCC 2022 Volume One applies.

Notes: New South Wales Section J Energy Efficiency

(1) For a Class 2 building or a Class 4 part of a building, where a relevant *development consent* or an application for a complying development certificate requires compliance with a BASIX Single Dwelling or Multi Dwelling Certificate issued under Version 3.0 or earlier, NSW Section J of NCC 2019 Volume One Amendment 1 applies.

(2) For a Class 2 building or a Class 4 part of a building, where a relevant *development consent* or an application for a complying development certificate requires compliance with a BASIX Single Dwelling or Multi Dwelling Certificate issued under Version 4.0 or later, Section J of NCC 2022 Volume One applies.

(3) For a Class 2 building or a Class 4 part of a building, where a relevant *development consent* or an application for a complying development certificate requires compliance with a BASIX Alterations and Additions Certificate, NSW Section J of NCC 2019 Volume One Amendment 1 applies.

(4) For a Class 3 building or Class 5 to 9 building:

(i) From 1 May 2023 to 30 September 2023 NSW Section J of NCC 2019 Volume One Amendment 1 may apply instead of Section J of NCC 2022 Volume One.

(ii) From 1 October 2023 Section J of NCC 2022 Volume One applies.

Notes: Tasmania Section J Energy Efficiency

In Tasmania, for a Class 2 building and Class 4 part of a building, Section J is replaced with Section J of BCA 2019 Amendment 1.

Deemed-to-Satisfy Provisions

J8D1 Deemed-to-Satisfy Provisions

[2019: J7.0]

NSW J8D1(1)

(1) Where a *Deemed-to-Satisfy Solution* is proposed, *Performance Requirements* J1P1 to J1P4 are satisfied by complying with—

(a) J2D2; and

(b) J3D2 to J3D15; and

(c) J4D2 to J4D7; and

(d) J5D2 to J5D8; and

(e) J6D2 to J6D13; and

(f) J7D2 to J7D9; and

(g) J8D2 to J8D4; and

(h) J9D2 to J9D5.

(2) Where a *Performance Solution* is proposed, the relevant *Performance Requirements* must be determined in accordance with A2G2(3) and A2G4(3) as applicable.

J8D2 Heated water supply

[2019: J7.2]

A heated water supply system for food preparation and sanitary purposes must be designed and installed in accordance with Part B2 of NCC Volume Three — Plumbing Code of Australia.

NSW J8D3

J8D3 Swimming pool heating and pumping

[2019: J7.3]

(1) Heating for a *swimming pool* must be by—

(a) a solar heater; or

(b) a heater using reclaimed heat from another process such as reject heat from a refrigeration plant; or

(c) a geothermal heater; or

(d) a gas heater that—

(i) if rated to consume 500 MJ/hour or less, achieves a minimum gross thermal efficiency of 86%; or

(ii) if rated to consume more than 500 MJ/hour, achieves a minimum gross thermal efficiency of 90%; or

(e) a heat pump; or

(f) a combination of (a) to (e).

(2) Where some or all of the heating *required* by (1) is by a gas heater or a heat pump, the *swimming pool* must have—

(a) a cover with a minimum *R-Value* of 0.05; and

(b) a time switch to control the operation of the heater.

(3) A time switch must be provided to control the operation of a circulation pump for a *swimming pool*.

(4) Where *required*, a time switch must be capable of switching electric power on and off at variable pre-programmed times and on variable pre-programmed days.

(5) Pipework carrying heated or chilled water for a *swimming pool* must comply with the insulation requirements of J6D9.

(6) For the purpose of J8D3, a *swimming pool* does not include a spa pool.

NSW J8D4

J8D4 Spa pool heating and pumping

[2019: J7.4]

(1) Heating for a spa pool that shares a water recirculation system with a *swimming pool* must be by—

(a) a solar heater; or

(b) a heater using reclaimed heat from another process such as reject heat from a refrigeration plant; or

(c) a geothermal heater; or

(d) a gas heater that—

(i) if rated to consume 500 MJ/hour or less, achieves a minimum gross thermal efficiency of 86%; or

(ii) if rated to consume more than 500 MJ/hour, achieves a minimum gross thermal efficiency of 90%; or

(e) a heat pump; or

(f) a combination of (a) to (e).

(2) Where some or all of the heating *required* by (1) is by a gas heater or a heat pump, the spa pool must have—

(a) a cover with a minimum *R-Value* of 0.05; and

(b) a push button and a time switch to control the operation of the heater.

(3) A time switch must be provided to control the operation of a circulation pump for a spa pool having a capacity of 680 L or more.

(4) Where *required*, a time switch must be capable of switching electric power on and off at variable pre-programmed times and on variable pre-programmed days.

(5) Pipework carrying heated or chilled water for a spa pool must comply with the insulation requirements of J6D9.

Part J9 Energy monitoring and on-site distributed energy resources

NT Part J9

Introduction to this Part

This Part contains *Deemed-to-Satisfy Provisions* for compliance with Part J1. It sets out provisions that enable the monitoring of energy use (other than for billing purposes) and facilitate easy retrofit of renewable energy and electric vehicle charging equipment.

Notes

From 1 May 2023 to 30 September 2023 Section J of NCC 2019 Volume One Amendment 1 may apply instead of Section J of NCC 2022 Volume One. From 1 October 2023 Section J of NCC 2022 Volume One applies.

Notes: New South Wales Section J Energy Efficiency

(1) For a Class 2 building or a Class 4 part of a building, where a relevant *development consent* or an application for a complying development certificate requires compliance with a BASIX Single Dwelling or Multi Dwelling Certificate issued under Version 3.0 or earlier, NSW Section J of NCC 2019 Volume One Amendment 1 applies.

(2) For a Class 2 building or a Class 4 part of a building, where a relevant *development consent* or an application for a complying development certificate requires compliance with a BASIX Single Dwelling or Multi Dwelling Certificate issued under Version 4.0 or later, Section J of NCC 2022 Volume One applies.

(3) For a Class 2 building or a Class 4 part of a building, where a relevant *development consent* or an application for a complying development certificate requires compliance with a BASIX Alterations and Additions Certificate, NSW Section J of NCC 2019 Volume One Amendment 1 applies.

(4) For a Class 3 building or Class 5 to 9 building:

(i) From 1 May 2023 to 30 September 2023 NSW Section J of NCC 2019 Volume One Amendment 1 may apply instead of Section J of NCC 2022 Volume One.

(ii) From 1 October 2023 Section J of NCC 2022 Volume One applies.

Notes: Tasmania Section J Energy Efficiency

In Tasmania, for a Class 2 building and Class 4 part of a building, Section J is replaced with Section J of BCA 2019 Amendment 1.

Deemed-to-Satisfy Provisions

J9D1 Deemed-to-Satisfy Provisions

[2019: J8.0]

NSW J9D1(1)

(1) Where a *Deemed-to-Satisfy Solution* is proposed, *Performance Requirements* J1P1 to J1P4 are satisfied by complying with—

(a) J2D2; and

(b) J3D2 to J3D15; and

(c) J4D2 to J4D7; and

(d) J5D2 to J5D8; and

(e) J6D2 to J6D13; and

(f) J7D2 to J7D9; and

(g) J8D2 to J8D4; and

(h) J9D2 to J9D5.

(2) Where a *Performance Solution* is proposed, the relevant *Performance Requirements* must be determined in accordance with A2G2(3) and A2G4(3) as applicable.

J9D2 Application of Part

[2019: J8.1]

The *Deemed-to-Satisfy Provisions* of this Part do not apply—

(a) within a *sole-occupancy unit* of a Class 2 building or a Class 4 part of a building; or

(b) to a Class 8 *electricity network substation*.

J9D3 Facilities for energy monitoring

[2019: J8.3]

(1) A building or *sole-occupancy unit* with a *floor area* of more than 500 m^2 must have energy meters configured to record the time-of-use consumption of gas and electricity.

(2) A building with a *floor area* of more than 2 500 m^2 must have energy meters configured to enable individual time-of-use energy data recording, in accordance with (3), of—

(a) *air-conditioning* plant including, where appropriate, heating plant, cooling plant and air handling fans; and

(b) artificial lighting; and

(c) appliance power; and

(d) central hot water supply; and

(e) internal transport devices including lifts, escalators and moving walkways where there is more than one serving the building; and

(f) on-site *renewable energy* equipment; and

(g) on-site electric vehicle charging equipment; and

(h) on-site *battery systems*; and

(i) other ancillary plant.

(3) Energy meters *required* by (2) must be interlinked by a communication system that collates the time-of-use energy data to a single interface monitoring system where it can be stored, analysed and reviewed.

(4) The provisions of (2) do not apply to energy meters serving—

(a) a Class 2 building where the total *floor area* of the common areas is less than 500 m^2; or

(b) individual *sole-occupancy units* with a *floor area* of less than 2 500 m^2.

J9D4 Facilities for electric vehicle charging equipment

[New for 2022]

(1) Subject to (2), a *carpark* associated with a Class 2, 3, 5, 6, 7b, 8 or 9 building must be provided with electrical distribution boards dedicated to electric vehicle charging—

(a) in accordance with Table J9D4 in each *storey* of the *carpark*; and

(b) labelled to indicate use for electric vehicle charging equipment.

(2) Electrical distribution boards dedicated to serving electric vehicle charging in a *carpark* must—

(a) be fitted with a charging control system with the ability to manage and schedule charging of electric vehicles in response to total building demand; and

(b) when associated with a Class 2 building, have capacity for each circuit to support an electric vehicle charger able to deliver a minimum of 12 kWh from 11:00 pm to 7:00 am daily; and

(c) when associated with a Class 5 to 9 building, have capacity for each circuit to support an electric vehicle charger able to deliver a minimum of 12 kWh from 9:00 am to 5:00 pm daily; and

(d) when associated with a Class 3 building, have capacity for each circuit to support an electric vehicle charger able to deliver a minimum of 48 kWh from 11:00 pm to 7:00 am daily; and

(e) be sized to support the future installation of a 7 kW (32 A) type 2 electric vehicle charger in—

(i) 100% of the car parking spaces associated with a Class 2 building; or

(ii) 10% of car parking spaces associated with a Class 5 or 6 building; or

(iii) 20% of car parking spaces associated with a Class 3, 7b, 8 or 9 building; and

(f) contain space of at least 36 mm width of DIN rail per outgoing circuit for individual sub-circuit electricity metering to record electricity use of electric vehicle charging equipment; and

(g) be labelled to indicate the use of the space *required* by (f) is for the future installation of metering equipment.

Limitations

J9D4 does not apply to a stand-alone Class 7a building.

Table J9D4: Electric vehicle distribution board requirement for each storey of a carpark

Carpark spaces per *storey* for electric vehicles	Electrical distribution boards for electric vehicle charging per *storey*
0 - 9	0
10 - 24	1
25 - 48	2
49 - 72	3
73 - 96	4
97 - 120	5
121 - 144	6
145 - 168	7

Table Notes

Where there are more than 168 *carpark* spaces per *storey*, one additional distribution board must be provided for each additional 24 spaces or part thereof.

J9D5 Facilities for solar photovoltaic and battery systems

[New for 2022]

(1) The main electrical switchboard of a building must—

(a) contain at least two empty three-phase circuit breaker slots and four DIN rail spaces labelled to indicate the use of each space for—

(i) a solar photovoltaic system; and

(ii) a *battery system*; and

(b) be sized to accommodate the installation of solar photovoltaic panels producing their maximum electrical output on at least 20% of the building roof area.

(2) At least 20% of the roof area of a building must be left clear for the installation of solar photovoltaic panels, except for buildings—

(a) with installed solar photovoltaic panels on—

(i) at least 20% of the roof area; or

(ii) an equivalent generation capacity elsewhere on-site; or

(b) where 100% of the roof area is shaded for more than 70% of daylight hours; or

(c) with a roof area of not more than 55 m^2; or

(d) where more than 50% of the roof area is used as a terrace, *carpark*, roof garden, *roof light* or the like.

Limitations

(1) The requirements of J9D5(1)(a)(i) and (b) do not apply to a building with solar photovoltaic panels installed on at least 20% of the roof area.

(2) The requirements of J9D5(1)(a)(ii) and (b) do not apply to a building with *battery systems* installed.

Specification 33 Additional requirements

S33C1 Scope

[2019: Spec JVa: 1]

This Specification contains requirements that must be complied with in addition to the modelling requirements of J1V1, J1V2, J1V3 and J1V5.

S33C2 Additional requirements — general

[2019: Spec JVa: 2]

In addition to the modelling requirements for J1V1, J1V2, J1V3 and J1V5, a building must comply with—

(a) for general thermal construction, J4D3; and

(b) for floor edge insulation, J4D7(2) and J4D7(3); and

(c) for building sealing, J1V4 or J5; and

(d) for deactivation, control and insulation of *air-conditioning* and mechanical ventilation systems—

(i) J6D3(1)(a); and

(ii) J6D3(1)(b)(i); and

(iii) J6D3(1)(d); and

(iv) J6D3(1)(f); and

(v) J6D3(2); and

(vi) J6D3(3); and

(vii) J6D4(2); and

(viii) J6D4(4); and

(ix) J6D5; and

(x) J6D6; and

(xi) J6D9; and

(e) for testing package *air-conditioning* equipment not less than 65 kWr, AS/NZS 3823.1.2 at test condition T1; and

(f) for testing a refrigeration chiller, AHRI 551/591; and

(g) for interior artificial lighting and power control, J7D4; and

(h) for interior decorative and display lighting, J7D5; and

(i) for artificial lighting around the exterior of a building, J7D6; and

(j) for boiling water and chilled water storage units, J7D7; and

(k) for deactivation of *swimming pool* heating and pumping, J8D3(2)(b) and J8D3(3); and

(l) for deactivation of spa pool heating and pumping, J8D4(2)(b) and J8D4(3); and

(m) for facilities for energy monitoring, Part J9; and

(n) for deactivation of fixed outdoor space heating appliances, clause J6D10(3).

S33C3 Additional requirements — Green Star

[2019: Spec JVa: 4]

Where not included in the building energy simulation to satisfy J1V2(1), compliance must be achieved with—

(a) for heating, cooling and ventilation equipment outside the scope of the *Green Star* model, Part J6; and

(b) for artificial lighting outside the scope of the *Green Star* model, Part J7.

Specification 34 Modelling parameters for J1V3

S34C1 Scope

[2019: Spec JVb: 1]

This Specification contains the *required* modelling parameters for J1V3.

S34C2 Reference building

[2019: Spec JVb: 2]

The *annual greenhouse gas emissions* must be calculated for the *reference building* in accordance with the following:

(a) The *reference building* must—

(i) comply with *Deemed-to-Satisfy Provisions* in Parts J4 to J8; and

(ii) have the minimum amount of mechanical ventilation *required* by Part F6.

(b) The *external walls* must have a solar absorptance of 0.6.

(c) The *air-conditioning* must—

(i) for 98% of the annual *hours of operation*, achieve temperatures between—

(A) 18°CDB to 25°CDB for *conditioned spaces* with transitory occupancy; and

(B) subject to (ii), 21°CDB to 24°CDB in all other *conditioned spaces*; and

(ii) if the proposed building has no mechanically provided cooling or has mixed mode cooling, have the same method of control and control set points for non-mechanical cooling as the proposed building.

(d) The infiltration rate in each zone must be—

(i) 0.7 air changes per hour throughout all zones when there is no mechanically supplied *outdoor air*; and

(ii) 0.35 air changes per hour throughout all zones at all other times.

(e) The artificial lighting must achieve the *required* maximum *illumination power density* in Part J7 without applying the control device adjustment factors.

(f) *Minimum Energy Performance Standards* must be applied to *services* not covered by Parts J6 to J8.

S34C3 Proposed building and reference building

[2019: Spec JVb: 3]

(1) The *annual greenhouse gas emissions* must be calculated for the proposed building and the *reference building* using the same—

(a) *annual greenhouse gas emissions* calculation method; and

(b) greenhouse gas emissions factors in accordance with (2); and

(c) location in accordance with (3); and

(d) adjacent structures and features; and

(e) orientation; and

(f) building form in accordance with (4); and

(g) testing standards including for insulation, *glazing*, water heater and unitary *air-conditioning* equipment; and

(h) *fabric* and *glazing* in accordance with (5); and

(i) *services* in accordance with (6) and S34C4.

(2) For the purposes of (1)(b), greenhouse gas emissions factors must be based on either—

(a) the factors in Table S34C3; or

(b) the current full fuel cycle emissions factors published by the Australian Government, except, where the greenhouse gas intensity of electricity is less than half the greenhouse gas intensity of natural gas—

(i) electricity is to be weighted as 1; and

(ii) natural gas is to be weighted as 2.

(3) For the purposes of (1)(c), location must be either—

(a) location where the building is to be constructed if appropriate climatic data is available; or

(b) the nearest location with similar climatic conditions, for which climatic data is available.

(4) For the purposes of (1)(f), building form must include—

(a) the roof geometry; and

(b) the floor plan; and

(c) the number of *storeys*; and

(d) the location, extent and configuration of ground floors and basements; and

(e) the size and location of *glazing*; and

(f) external doors.

(5) For the purposes of (1)(h), fabric and *glazing* must include—

(a) quality of insulation installation; and

(b) thermal resistance of air films including any adjustment factors, moisture content of materials and the like; and

(c) dimensions of external, internal and separating walls; and

(d) internal shading devices, their colour and their criteria for operation.

(6) For the purposes of (1)(i), *services* must include—

(a) range and type of *services* and energy sources, other than *renewable energy* generated on *site*; and

(b) assumptions and means of calculating the temperature difference across *air-conditioning* zone boundaries; and

(c) floor coverings and furniture and fittings density; and

(d) internal artificial lighting illumination levels; and

(e) internal heat gains including people, lighting, appliances, meals and other electric power loads; and

(f) *air-conditioning*, including chiller, fan and *boiler* equipment, system configuration and zones; and

(g) profiles for occupancy, *air-conditioning*, lighting and internal heat gains from people, hot meals, appliances, equipment and heated water supply systems based on—

(i) Specification 35; or

(ii) *NABERS Energy* simulation requirements; or

(iii) *Green Star* simulation requirements; or

(iv) the actual building if—

(A) the operating hours per year are not less than 2 500; or

(B) the daily operating profiles are not listed in Specification 35; and

(h) supply heated water temperature and rate of use; and

(i) infiltration values, subject to (7); and

(j) sequencing for water heaters, refrigeration chillers and heat rejection equipment such as cooling towers; and

(k) representation of clothing and metabolic rate of the occupants; and

(l) control of *air-conditioning* except—

(i) the *reference building* must have variable temperature control for chilled and heated water that modulates the chilled water and heated water temperatures as required to maximise the efficiency of the chiller or boiler operation during periods of low load; and

(ii) if the controls for the proposed building are not adequately specified or cannot be simulated, the sample control specifications in Appendix B of AIRAH-DA28 must be used; and

(m) environmental conditions such as ground reflectivity, sky and ground form factors, temperature of external

bounding surfaces, air velocities across external surfaces and the like; and

(n) number, sizes, floors and traffic served by lifts and escalators.

(7) For the purposes of (6)(i), the intended building leakage at 50 Pa may be converted into a whole building infiltration value for the proposed building infiltration using Tables 4.16 to 4.24 of CIBSE Guide A if all of the following have been specified:

(a) Additional sealing provisions to those *required* by Part J5.

(b) An intended building leakage of less than 10 $m^3/hr.m^2$ at 50 Pa.

(c) Pressure testing to verify achievement of the intended building leakage.

Table S34C3: Greenhouse gas emissions factors ($kgCO_2$-e/GJ)

Energy Source	ACT	NSW	NT	QLD	SA	TAS	VIC	WA
Electricity	-	236	162	254	101	44	279	191
Gas	-	51.53	51.53	51.53	51.53	51.53	51.53	51.53

Table Notes

(1) National emissions factors are not applicable to calculations for buildings in the ACT as they do not take into account investments in renewable electricity generation in the national electricity market made by the ACT.

(2) Values for the ACT can be found in the ACT Appendix.

S34C4 Services — proposed and reference building

[2019: Spec JVb: 4]

For the modelling of *services* for the purposes of calculating *annual greenhouse gas emissions*—

(a) system demand and response for all items of plant must be calculated on a not less frequent than hourly basis; and

(b) energy usage of all items of plant must be calculated with allowances for—

(i) part load performance; and

(ii) staging to meet system demand; and

(c) energy usage of cooling plant must be calculated with allowances for—

(i) the impact of chilled water temperature on chiller efficiency; and

(ii) the impact of condenser water temperature on water-cooled plant efficiency; and

(iii) the impact of ambient temperature on air-cooled plant efficiency; and

(iv) the energy use of primary pumps serving individual chillers; and

(v) the energy use of auxiliary equipment, including controls and oil heating for chillers; and

(vi) thermal losses in the chilled water system; and

(vii) the impact of chilled water temperature on thermal losses in the chilled water system; and

(d) energy usage of water heating systems for space heating must be calculated with allowances for—

(i) the impact of water temperature on water heater efficiency; and

(ii) the energy use of primary or feedwater pumps serving individual water heaters; and

(iii) thermal losses in water heating systems; and

(iv) the thermal mass of water heating systems, accounting for thermal losses during periods when the system is not operating; and

(e) energy usage of fan and pump systems must be calculated with allowances for—

(i) the method of capacity regulation; and

(ii) the use of either fixed or variable pressure control; and

(f) energy usage of pump systems must be calculated with allowances for the system fixed static pressure head; and

(g) energy usage of auxiliary equipment associated with co-generation and tri-generation systems, including pumps, cooling towers and jacket heaters, must be calculated; and

(h) where the energy usage of the heated water supply for food preparation and sanitary purposes or the energy usage of lifts and escalators is the same in the proposed building and the *reference building*, they may be omitted from the calculation of both the proposed building and the *reference building*; and

(i) energy use of a lift in a building with more than one classification may be apportioned according to the number of *storeys* of the part for which the *annual greenhouse gas emissions* and *thermal comfort level* are being calculated.

Specification 35 Modelling profiles for J1V3

S35C1 Scope

[2019: Spec JVc: 1]

This Specification contains modelling profiles as referenced in S34C3(6)(g).

S35C2 Modelling profiles

[2019: Spec JVc: 2]

(1) The *air-conditioning*, must be modelled on the basis of—

(a) the daily occupancy and operation profiles in Tables S35C2a, S35C2b, S35C2c, S35C2d, S35C2e, S35C2f, S35C2g, S35C2h, S35C2i, S35C2j and S35C2k; and

(b) the internal heat gains in a building—

(i) from occupants and hot meals, in accordance with one of the options in Table S35C2n; and

(ii) from appliances and equipment, in accordance with Table S35C2l; and

(iii) from artificial lighting, determined in accordance with (2).

(2) The artificial lighting, must be modelled on the basis of the proposed level of artificial lighting in the building with the daily profile in Tables S35C2a, S35C2b, S35C2c, S35C2d, S35C2e, S35C2f, S35C2g, S35C2h, S35C2i, S35C2j and S35C2k.

(3) The heated water supply, must be modelled on the basis of the consumption rates of Table S35C2m.

Table S35C2a: Occupancy and operation profiles of a Class 2 common area

Time period (local standard time)	Occupancy (Daily)	Artificial lighting (Daily)	Appliances and equipment (Daily)	*Air-conditioning* (Daily)
12:00am to 1:00am	0%	30%	0%	On
1:00am to 2:00am	0%	30%	0%	On
2:00am to 3:00am	0%	30%	0%	On
3:00am to 4:00am	0%	30%	0%	On
4:00am to 5:00am	0%	30%	0%	On
5:00am to 6:00am	0%	30%	0%	On
6:00am to 7:00am	0%	50%	0%	On
7:00am to 8:00am	0%	50%	0%	On
8:00am to 9:00am	0%	50%	0%	On
9:00am to 10:00am	0%	50%	0%	On
10:00am to 11:00am	0%	50%	0%	On
11:00am to 12:00pm	0%	50%	0%	On
12:00pm to 1:00pm	0%	50%	0%	On
1:00pm to 2:00pm	0%	50%	0%	On
2:00pm to 3:00pm	0%	50%	0%	On
3:00pm to 4:00pm	0%	50%	0%	On
4:00pm to 5:00pm	0%	50%	0%	On
5:00pm to 6:00pm	0%	50%	0%	On
6:00pm to 7:00pm	0%	50%	0%	On

Time period (local standard time)	Occupancy (Daily)	Artificial lighting (Daily)	Appliances and equipment (Daily)	*Air-conditioning* (Daily)
7:00pm to 8:00pm	0%	50%	0%	On
8:00pm to 9:00pm	0%	50%	0%	On
9:00pm to 10:00pm	0%	50%	0%	On
10:00pm to 11:00pm	0%	50%	0%	On
11:00pm to 12:00am	0%	30%	0%	On

Table Notes

The artificial lighting profile is expressed as a percentage of the maximum *illumination power density* permitted under Part J7.

Table S35C2b: Occupancy and operation profiles of a Class 3 hotel

Time period (local standard time)	Occupancy (Daily)	Artificial lighting (Daily)	Appliances and equipment (Daily)	*Air-conditioning* (Daily)
12:00am to 1:00am	90%	5%	20%	On
1:00am to 2:00am	90%	5%	20%	On
2:00am to 3:00am	90%	5%	15%	On
3:00am to 4:00am	90%	5%	15%	On
4:00am to 5:00am	90%	5%	15%	On
5:00am to 6:00am	80%	25%	15%	On
6:00am to 7:00am	70%	80%	40%	On
7:00am to 8:00am	60%	80%	80%	On
8:00am to 9:00am	60%	50%	50%	On
9:00am to 10:00am	30%	20%	30%	On
10:00am to 11:00am	10%	20%	20%	Off
11:00am to 12:00pm	10%	20%	20%	Off
12:00pm to 1:00pm	10%	20%	20%	Off
1:00pm to 2:00pm	10%	20%	20%	Off
2:00pm to 3:00pm	10%	20%	20%	Off
3:00pm to 4:00pm	10%	20%	20%	Off
4:00pm to 5:00pm	20%	20%	20%	On
5:00pm to 6:00pm	30%	50%	40%	On
6:00pm to 7:00pm	40%	50%	40%	On
7:00pm to 8:00pm	50%	50%	50%	On
8:00pm to 9:00pm	60%	50%	60%	On
9:00pm to 10:00pm	70%	50%	60%	On
10:00pm to 11:00pm	70%	50%	40%	On
11:00pm to 12:00am	90%	50%	20%	On

Table Notes

(1) The occupancy profile is expressed as a percentage of the maximum number of people that can be accommodated in the Class 3 building.

(2) The artificial lighting profile is expressed as a percentage of the maximum *illumination power density* permitted under Part J7.

(3) The *air-conditioning* profile is expressed as the plant status.

Table S35C2c: Weekday occupancy and operation profiles of a Class 5 building, a Class 7 warehouse, a Class 8 Laboratory or a Class 9a clinic, day surgery or procedure unit

Time period (local standard time)	Occupancy (Monday to Friday)	Artificial lighting (Monday to Friday)	Appliances and equipment (Monday to Friday)	*Air-conditioning* (Monday to Friday)
12:00am to 1:00am	0%	15%	25%	Off
1:00am to 2:00am	0%	15%	25%	Off
2:00am to 3:00am	0%	15%	25%	Off
3:00am to 4:00am	0%	15%	25%	Off
4:00am to 5:00am	0%	15%	25%	Off
5:00am to 6:00am	0%	15%	25%	Off
6:00am to 7:00am	0%	15%	25%	Off
7:00am to 8:00am	10%	40%	65%	On
8:00am to 9:00am	20%	90%	80%	On
9:00am to 10:00am	70%	100%	100%	On
10:00am to 11:00am	70%	100%	100%	On
11:00am to 12:00pm	70%	100%	100%	On
12:00pm to 1:00pm	70%	100%	100%	On
1:00pm to 2:00pm	70%	100%	100%	On
2:00pm to 3:00pm	70%	100%	100%	On
3:00pm to 4:00pm	70%	100%	100%	On
4:00pm to 5:00pm	70%	100%	100%	On
5:00pm to 6:00pm	35%	80%	80%	On
6:00pm to 7:00pm	10%	60%	65%	Off
7:00pm to 8:00pm	5%	60%	55%	Off
8:00pm to 9:00pm	5%	50%	25%	Off
9:00pm to 10:00pm	0%	15%	25%	Off
10:00pm to 11:00pm	0%	15%	25%	Off
11:00pm to 12:00am	0%	15%	25%	Off

Table Notes

(1) The occupancy profile is expressed as a percentage of the maximum number of people that can be accommodated in the building.

(2) The artificial lighting profile is expressed as a percentage of the maximum *illumination power density* permitted under Part J7.

(3) The appliances and equipment profile is expressed as a percentage of the maximum internal heat gain in Table S35C2I.

(4) The *air-conditioning* profile is expressed as the plant status.

Table S35C2d: Weekend occupancy and operation profiles of a Class 5 building, a Class 7 warehouse, a Class 8 Laboratory or a Class 9a clinic, day surgery or procedure unit

Time period (local standard time)	Occupancy (Saturday, Sunday and holidays)	Artificial lighting (Saturday, Sunday and holidays)	Appliances and equipment (Saturday, Sunday and holidays)	*Air-conditioning* (Saturday, Sunday and holidays)
12:00am to 1:00am	0%	15%	25%	Off
1:00am to 2:00am	0%	15%	25%	Off
2:00am to 3:00am	0%	15%	25%	Off

Time period (local standard time)	Occupancy (Saturday, Sunday and holidays)	Artificial lighting (Saturday, Sunday and holidays)	Appliances and equipment (Saturday, Sunday and holidays)	*Air-conditioning* (Saturday, Sunday and holidays)
3:00am to 4:00am	0%	15%	25%	Off
4:00am to 5:00am	0%	15%	25%	Off
5:00am to 6:00am	0%	15%	25%	Off
6:00am to 7:00am	0%	15%	25%	Off
7:00am to 8:00am	0%	15%	25%	Off
8:00am to 9:00am	5%	25%	25%	Off
9:00am to 10:00am	5%	25%	25%	Off
10:00am to 11:00am	5%	25%	25%	Off
11:00am to 12:00pm	5%	25%	25%	Off
12:00pm to 1:00pm	5%	25%	25%	Off
1:00pm to 2:00pm	5%	25%	25%	Off
2:00pm to 3:00pm	5%	25%	25%	Off
3:00pm to 4:00pm	5%	25%	25%	Off
4:00pm to 5:00pm	5%	25%	25%	Off
5:00pm to 6:00pm	0%	15%	25%	Off
6:00pm to 7:00pm	0%	15%	25%	Off
7:00pm to 8:00pm	0%	15%	25%	Off
8:00pm to 9:00pm	0%	15%	25%	Off
9:00pm to 10:00pm	0%	15%	25%	Off
10:00pm to 11:00pm	0%	15%	25%	Off
11:00pm to 12:00am	0%	15%	25%	Off

Table Notes

(1) The occupancy profile is expressed as a percentage of the maximum number of people that can be accommodated in the building.

(2) The artificial lighting profile is expressed as a percentage of the maximum *illumination power density* permitted under Part J7.

(3) The appliances and equipment profile is expressed as a percentage of the maximum internal heat gain in Table S35C2l.

(4) The *air-conditioning* profile is expressed as the plant status.

Table S35C2e: Occupancy and operation profiles of a Class 6 shop or shopping centre

Time period (local standard time)	Occupancy (Daily)	Artificial lighting (Daily)	Appliances and equipment (Daily)	*Air-conditioning* (Daily)
12:00am to 1:00am	0%	25%	25%	Off
1:00am to 2:00am	0%	25%	25%	Off
2:00am to 3:00am	0%	25%	25%	Off
3:00am to 4:00am	0%	25%	25%	Off
4:00am to 5:00am	0%	25%	25%	Off
5:00am to 6:00am	0%	25%	25%	Off
6:00am to 7:00am	0%	25%	25%	Off
7:00am to 8:00am	10%	100%	70%	On
8:00am to 9:00am	20%	100%	70%	On
9:00am to 10:00am	20%	100%	70%	On

Time period (local standard time)	Occupancy (Daily)	Artificial lighting (Daily)	Appliances and equipment (Daily)	*Air-conditioning* (Daily)
10:00am to 11:00am	15%	100%	70%	On
11:00am to 12:00pm	25%	100%	70%	On
12:00pm to 1:00pm	25%	100%	70%	On
1:00pm to 2:00pm	15%	100%	70%	On
2:00pm to 3:00pm	15%	100%	70%	On
3:00pm to 4:00pm	15%	100%	70%	On
4:00pm to 5:00pm	15%	100%	70%	On
5:00pm to 6:00pm	5%	100%	70%	On
6:00pm to 7:00pm	5%	100%	70%	Off
7:00pm to 8:00pm	0%	10%	10%	Off
8:00pm to 9:00pm	0%	10%	10%	Off
9:00pm to 10:00pm	0%	10%	10%	Off
10:00pm to 11:00pm	0%	10%	10%	Off
11:00pm to 12:00am	0%	10%	10%	Off

Table Notes

(1) The occupancy profile is expressed as a percentage of the maximum number of people that can be accommodated in the building.

(2) The artificial lighting profile is expressed as a percentage of the maximum *illumination power density* permitted under Part J7.

(3) The appliances and equipment profile is expressed as a percentage of the maximum internal heat gain in S35C2I.

(4) The *air-conditioning* profile is expressed as the plant status.

Table S35C2f: Occupancy and operation profiles of a Class 6 restaurant or cafe

Time period (local standard time)	Occupancy (Monday to Saturday)	Artificial lighting (Monday to Saturday)	Appliances and equipment (Monday to Saturday)	*Air-conditioning* (Monday to Saturday)
12:00am to 1:00am	0%	5%	15%	Off
1:00am to 2:00am	0%	5%	15%	Off
2:00am to 3:00am	0%	5%	15%	Off
3:00am to 4:00am	0%	5%	15%	Off
4:00am to 5:00am	0%	5%	15%	Off
5:00am to 6:00am	0%	5%	15%	Off
6:00am to 7:00am	5%	40%	40%	Off
7:00am to 8:00am	5%	40%	40%	On
8:00am to 9:00am	5%	60%	60%	On
9:00am to 10:00am	5%	60%	60%	On
10:00am to 11:00am	20%	90%	90%	On
11:00am to 12:00pm	50%	90%	90%	On
12:00pm to 1:00pm	80%	90%	90%	On
1:00pm to 2:00pm	70%	90%	90%	On
2:00pm to 3:00pm	40%	90%	90%	On
3:00pm to 4:00pm	20%	90%	90%	On
4:00pm to 5:00pm	25%	90%	90%	On

Time period (local standard time)	Occupancy (Monday to Saturday)	Artificial lighting (Monday to Saturday)	Appliances and equipment (Monday to Saturday)	*Air-conditioning* (Monday to Saturday)
5:00pm to 6:00pm	50%	90%	90%	On
6:00pm to 7:00pm	80%	90%	90%	On
7:00pm to 8:00pm	80%	90%	90%	On
8:00pm to 9:00pm	80%	90%	90%	On
9:00pm to 10:00pm	50%	90%	90%	On
10:00pm to 11:00pm	35%	50%	50%	On
11:00pm to 12:00am	20%	30%	30%	On

Table Notes

(1) The occupancy profile is expressed as a percentage of the maximum number of people that can be accommodated in the building.

(2) The artificial lighting profile is expressed as a percentage of the maximum *illumination power density* permitted under Part J7.

(3) The appliances and equipment profile is expressed as a percentage of the maximum internal heat gain in S35C2I.

(4) The *air-conditioning* profile is expressed as the plant status.

(5) Sunday profile is 5% continuous artificial lighting and 5% continuous appliances and equipment where there is no occupancy and the *air-conditioning* is “off”.

Table S35C2g: Occupancy and operation profiles of a Class 9a ward area

Time period (local standard time)	Occupancy (Daily)	Artificial lighting (Daily)	*Air-conditioning* (Daily)
12:00am to 1:00am	70%	5%	On
1:00am to 2:00am	70%	5%	On
2:00am to 3:00am	70%	5%	On
3:00am to 4:00am	70%	5%	On
4:00am to 5:00am	70%	5%	On
5:00am to 6:00am	70%	25%	On
6:00am to 7:00am	70%	80%	On
7:00am to 8:00am	70%	80%	On
8:00am to 9:00am	70%	50%	On
9:00am to 10:00am	70%	20%	On
10:00am to 11:00am	70%	20%	On
11:00am to 12:00pm	70%	20%	On
12:00pm to 1:00pm	70%	20%	On
1:00pm to 2:00pm	70%	20%	On
2:00pm to 3:00pm	70%	20%	On
3:00pm to 4:00pm	70%	20%	On
4:00pm to 5:00pm	70%	20%	On
5:00pm to 6:00pm	70%	50%	On
6:00pm to 7:00pm	70%	50%	On
7:00pm to 8:00pm	70%	50%	On
8:00pm to 9:00pm	70%	50%	On
9:00pm to 10:00pm	70%	50%	On
10:00pm to 11:00pm	70%	50%	On

Time period (local standard time)	Occupancy (Daily)	Artificial lighting (Daily)	*Air-conditioning* (Daily)
11:00pm to 12:00am	70%	5%	On

Table Notes

(1) The occupancy profile is expressed as a percentage of the maximum number of people that can be accommodated in the building.

(2) The artificial lighting profile is expressed as a percentage of the maximum *illumination power density* permitted under Part J7.

(3) The *air-conditioning* profile is expressed as the plant status.

Table S35C2h: Occupancy and operation profiles of a Class 9b theatre or cinema

Time period (local standard time)	Occupancy (Monday to Friday)	Occupancy (Saturday and Sunday)	Artificial lighting (Monday to Friday)	Artificial lighting (Saturday and Sunday)	*Air-conditioning* (Monday to Friday)	*Air-conditioning* (Saturday and Sunday)
12:00am to 1:00am	0%	0%	5%	5%	Off	Off
1:00am to 2:00am	0%	0%	5%	5%	Off	Off
2:00am to 3:00am	0%	0%	5%	5%	Off	Off
3:00am to 4:00am	0%	0%	5%	5%	Off	Off
4:00am to 5:00am	0%	0%	5%	5%	Off	Off
5:00am to 6:00am	0%	0%	5%	5%	Off	Off
6:00am to 7:00am	0%	0%	5%	5%	Off	Off
7:00am to 8:00am	0%	0%	5%	5%	Off	On
8:00am to 9:00am	0%	20%	100%	100%	Off	On
9:00am to 10:00am	0%	70%	10%	10%	Off	On
10:00am to 11:00am	0%	70%	10%	10%	Off	On
11:00am to 12:00pm	0%	70%	10%	10%	On	On
12:00pm to 1:00pm	20%	20%	100%	100%	On	On
1:00pm to 2:00pm	70%	70%	5%	5%	On	On
2:00pm to 3:00pm	70%	70%	5%	5%	On	On
3:00pm to 4:00pm	70%	70%	5%	5%	On	On
4:00pm to 5:00pm	70%	70%	5%	5%	On	On

Time period (local standard time)	Occupancy (Monday to Friday)	Occupancy (Saturday and Sunday)	Artificial lighting (Monday to Friday)	Artificial lighting (Saturday and Sunday)	*Air-conditioning* (Monday to Friday)	*Air-conditioning* (Saturday and Sunday)
5:00pm to 6:00pm	20%	20%	100%	100%	On	On
6:00pm to 7:00pm	20%	20%	100%	100%	On	On
7:00pm to 8:00pm	70%	70%	100%	100%	On	On
8:00pm to 9:00pm	70%	70%	5%	5%	On	On
9:00pm to 10:00pm	70%	70%	5%	5%	On	On
10:00pm to 11:00pm	70%	70%	5%	5%	On	On
11:00pm to 12:00am	10%	10%	100%	100%	On	On

Table Notes

(1) The occupancy profile is expressed as a percentage of the maximum number of people that can be accommodated in the building.

(2) The artificial lighting profile is expressed as a percentage of the maximum *illumination power density* permitted under Part J7.

(3) The *air-conditioning* profile is expressed as the plant status.

Table S35C2i: Occupancy and operation profiles of a Class 9b conference facility

Hour	Occupancy (Daily)	Artificial lighting and equipment (Daily)	*Air-conditioning* (Monday to Friday)
12:00am to 1:00am	0%	15%	Off
1:00am to 2:00am	0%	15%	Off
2:00am to 3:00am	0%	15%	Off
3:00am to 4:00am	0%	15%	Off
4:00am to 5:00am	0%	15%	Off
5:00am to 6:00am	0%	15%	Off
6:00am to 7:00am	5%	25%	On
7:00am to 8:00am	10%	45%	On
8:00am to 9:00am	20%	45%	On
9:00am to 10:00am	20%	45%	On
10:00am to 11:00am	25%	60%	On
11:00am to 12:00pm	30%	60%	On
12:00pm to 1:00pm	30%	60%	On
1:00pm to 2:00pm	35%	60%	On
2:00pm to 3:00pm	30%	45%	On
3:00pm to 4:00pm	30%	60%	On
4:00pm to 5:00pm	35%	60%	On
5:00pm to 6:00pm	25%	60%	On
6:00pm to 7:00pm	20%	60%	On
7:00pm to 8:00pm	15%	25%	On

Hour	Occupancy (Daily)	Artificial lighting and equipment (Daily)	*Air-conditioning* (Monday to Friday)
8:00pm to 9:00pm	10%	25%	On
9:00pm to 10:00pm	10%	25%	On
10:00pm to 11:00pm	10%	25%	On
11:00pm to 12:00am	5%	25%	Off

Table Notes

(1) The occupancy profile is expressed as a percentage of the maximum number of people that can be accommodated in the building.

(2) The artificial lighting profile is expressed as a percentage of the maximum *illumination power density* permitted under Part J7.

(3) The appliances and equipment profile is expressed as a percentage of the maximum internal heat gain in S35C2l.

(4) The *air-conditioning* profile is expressed as the plant status.

Table S35C2j: Occupancy and operation profiles of a Class 9b school

Time period (local standard time)	Occupancy (Monday to Friday)	Artificial lighting (Monday to Friday)	Appliances and equipment (Monday to Friday)	*Air-conditioning* (Monday to Friday)
12:00am to 1:00am	0%	5%	5%	Off
1:00am to 2:00am	0%	5%	5%	Off
2:00am to 3:00am	0%	5%	5%	Off
3:00am to 4:00am	0%	5%	5%	Off
4:00am to 5:00am	0%	5%	5%	Off
5:00am to 6:00am	0%	5%	5%	Off
6:00am to 7:00am	0%	5%	5%	Off
7:00am to 8:00am	5%	30%	30%	On
8:00am to 9:00am	75%	85%	85%	On
9:00am to 10:00am	90%	95%	95%	On
10:00am to 11:00am	90%	95%	95%	On
11:00am to 12:00pm	90%	95%	95%	On
12:00pm to 1:00pm	50%	80%	70%	On
1:00pm to 2:00pm	50%	80%	70%	On
2:00pm to 3:00pm	90%	95%	95%	On
3:00pm to 4:00pm	70%	90%	80%	On
4:00pm to 5:00pm	50%	70%	60%	On
5:00pm to 6:00pm	20%	20%	20%	Off
6:00pm to 7:00pm	20%	20%	20%	Off
7:00pm to 8:00pm	20%	20%	20%	Off
8:00pm to 9:00pm	10%	10%	10%	Off
9:00pm to 10:00pm	5%	5%	5%	Off
10:00pm to 11:00pm	5%	5%	5%	Off
11:00pm to 12:00am	5%	5%	5%	Off

Table Notes

(1) The occupancy profile is expressed as a percentage of the maximum number of people that can be accommodated in the building.

(2) The artificial lighting profile is expressed as a percentage of the maximum *illumination power density* permitted under Part J7.

(3) The appliances and equipment profile is expressed as a percentage of the maximum internal heat gain in S35C2I.

(4) The *air-conditioning* profile is expressed as the plant status.

(5) Saturday and Sunday profiles are 5% continuous artificial lighting and 5% continuous appliances and equipment, where there is no occupancy and the *air-conditioning* is "off".

Table S35C2k: Occupancy and operation profiles of a Class 9c aged care facility

Time period (local standard time)	Occupancy (Monday to Friday)	Occupancy (Saturday, Sunday and holidays)	Artificial lighting (Daily)	*Air-conditioning* (Monday to Friday)	*Air-conditioning* (Saturday, Sunday and holidays)
12:00am to 1:00am	85%	85%	5%	On	On
1:00am to 2:00am	85%	85%	5%	On	On
2:00am to 3:00am	85%	85%	5%	On	On
3:00am to 4:00am	85%	85%	5%	On	On
4:00am to 5:00am	85%	85%	5%	On	On
5:00am to 6:00am	85%	85%	25%	On	On
6:00am to 7:00am	85%	85%	80%	On	On
7:00am to 8:00am	80%	85%	80%	On	On
8:00am to 9:00am	50%	50%	50%	On	On
9:00am to 10:00am	10%	50%	20%	Off	On
10:00am to 11:00am	10%	20%	20%	Off	Off
11:00am to 12:00pm	10%	20%	20%	Off	Off
12:00pm to 1:00pm	10%	20%	20%	Off	Off
1:00pm to 2:00pm	10%	20%	20%	Off	Off
2:00pm to 3:00pm	10%	20%	20%	Off	Off
3:00pm to 4:00pm	10%	30%	20%	Off	Off
4:00pm to 5:00pm	50%	50%	20%	On	On
5:00pm to 6:00pm	50%	50%	50%	On	On
6:00pm to 7:00pm	70%	50%	50%	On	On
7:00pm to 8:00pm	70%	70%	50%	On	On
8:00pm to 9:00pm	80%	80%	50%	On	On
9:00pm to 10:00pm	85%	80%	50%	On	On
10:00pm to 11:00pm	85%	85%	50%	On	On
11:00pm to 12:00am	85%	85%	5%	On	On

Table Notes

(1) The occupancy profile is expressed as a percentage of the maximum number of people that can be accommodated in the Class 9c building.

(2) The artificial lighting profile is expressed as a percentage of the maximum *illumination power density* permitted

under Part J7.

(3) The *air-conditioning* profile is expressed as the plant status.

Table S35C2l: Internal heat gains for appliances and equipment

Application	Internal sensible heat gain rate
Class 9a building *ward area*	5 W/m^2 averaged for 24 hours per day, 7 days per week, continuous operation
Class 8 laboratory and a Class 9a clinic, day surgery and a procedure unit	15 W/m^2
Class 6 shop and shopping centre, Class 6 cafe and restaurant and Class 9b *school*	5 W/m^2
Other applications	No load
Class 3 (*sole-occupancy unit*)	160 W per room
Class 3 dormitories	No load
Class 5 building	11 W/m^2
Class 9c building	160 W per room
Class 9b (conference facilities only)	150 W per room plus 10 W per person

Table S35C2m: Heated water supply consumption rates

Application	Daily consumption rate at 60°C
Residential part of a hotel or motel	100 L/*sole-occupancy unit*
Dormitory, boarding house, guest house, hostel, lodging house and backpackers accommodation	50 L/person
Residential part of a *school*, accommodation for the aged, children or people with a disability and a *detention centre* or a *health-care building* which accommodates members of staff	
Class 9c building	
Office, laboratory, shop and *assembly building*	4 L/person
Dining room, restaurant and cafe	9 L/meal
Health-care building, *ward area*	70 L/patient
School	7 L/person
Other applications	4 L/person

Table S35C2n: Internal heat gains for occupants and hot meals

Application	Internal heat gains per person
Dining room, restaurant or cafe	80 W *sensible heat gain* and 80 W *latent heat gain*
	The average adjusted metabolic rate for sedentary work from Table 45 of AIRAH-DA09
	The heat emission rate for sedentary work from Table 6.3 of CIBSE Guide A
Other applications	75 W *sensible heat gain* and 55 W *latent heat gain*
	An average adjusted metabolic rate from Table 45 of AIRAH-DA09
	A heat emission rate from Table 6.3 of CIBSE Guide A

Table Notes

(1) The number of people must be calculated in accordance with D2D18.

(2) For a dining room, restaurant or cafe, the internal heat gains per person account for heat gains from both occupants and hot meals.

(3) For other applications, the internal heat gains per person only account for heat gains from occupants.

Specification 36 Material properties

S36C1 Scope

[2019: Spec J1.2: 1]

This Specification lists the thermal properties of some common construction materials.

S36C2 Construction Deemed-to-Satisfy

[2019: Spec J1.2: 2]

(1) Tables S36C2a, S36C2b, S36C2c, S36C2d and S36C2e list the thermal conductivity considered to be achieved by some common construction materials.

(2) For the purposes of Tables S36C2a, S36C2b, S36C2c, S36C2d and S36C2e:

(a) For materials which incorporate cores or hollows in regular patterns (such as cored brickwork, hollow blockwork and cored floor or wall panels), the tabulated material densities and thermal conductivities are based on the gross density (mass divided by external dimensions).

(b) The *R-Value* of a material is determined by dividing the thickness of the material in metres by the thermal conductivity in $Wm^{-1}K^{-1}$.

(3) Tables S36C2f, S36C2g, S36C2h, S36C2i, S36C2j, S36C2k, S36C2l and S36C2m list the *R-Value* considered to be achieved by air films and airspaces.

(4) For an *envelope* that contains a ventilated airspace, the *Total R-Value* of the building *fabric* must be reduced based on the area of ventilation openings in accordance with clause 6.3 of AS/NZS 4859.2.

(5) The requirements of (4) do not apply to a roof with an airspace greater than 300 mm or a pitched roof greater than 5° with a horizontal ceiling.

Table S36C2a: Thermal conductivity of typical framing materials

Description	Density (kg/m^3)	Thermal conductivity ($Wm^{-1}K^{-1}$)
Steel	7850	47.5
Timber – kiln dried hardwood (across the grain)	677	0.16
Timber – Radiata pine (across the grain)	506	0.12

Table S36C2b: Thermal conductivity of typical roof cladding materials

Description	Density (kg/m^3)	Thermal conductivity ($Wm^{-1}K^{-1}$)
Aluminium sheeting	2680	210
Concrete or terra cotta tiles	1922	0.81
Steel sheeting	7850	47.5

Table S36C2c: Thermal conductivity of typical wall cladding materials

Description	Density (kg/m^3)	Thermal conductivity ($Wm^{-1}K^{-1}$)
Aluminium sheeting	2680	210
Autoclaved aerated concrete	350	0.10
	510	0.15
	900	0.27

Description	Density (kg/m^3)	Thermal conductivity (Wm^{-1}K^{-1})
Cement render (1 part cement to 4 parts sand)	1570	0.53
Clay brick: 2.75 kg	1430	0.55
Clay brick: 3.25 kg	1690	0.65
Clay brick: 3.75 kg	1950	0.78
Concrete block: 190 mm dense or 90 mm dense solid	1100/2200	1.1
Concrete block: 140 mm dense or 190 mm lightweight	1250/910	0.85
Concrete block: 90 mm dense hollow or 90 mm lightweight solid	1650 / 1800	0.75
Concrete block: 140 mm lightweight	1050	0.67
Concrete block: 90 mm lightweight	1360	0.55
Fibre-cement	1360	0.25
Gypsum plasterboard	880	0.17
Pine weatherboards	506	0.10
Plywood	530	0.14
Solid concrete	2400	1.44
Steel sheeting	7850	47.5
Prestressed hollow core concrete panel	1680	0.80

Table S36C2d: Thermal conductivity of typical flooring materials

Description	Density (kg/m^3)	Thermal conductivity (Wm^{-1}K^{-1})
Carpet underlay	-	0.04
Carpet	-	0.05
Prestressed hollow core concrete planks	1680	0.80
Particleboard	640	0.12
Plywood	530	0.14
Timber – kiln dried hardwood (across the grain)	677	0.16
Timber – Radiata pine (across the grain)	506	0.10
Solid concrete	2400	1.44
Vinyl floor tiles	2050	0.79

Table S36C2e: Thermal conductivity of other materials not listed in Tables S36C2a to S36C2d

Description	Density (kg/m^3)	Thermal conductivity (Wm^{-1}K^{-1})
Clay soil (10% moisture content)	1300	0.6
PMMA (polymethylmethacrylate)	1180	1.0
Polycarbonates	1200	0.2
Sand (6% moisture content)	1800	1.64
Soda lime glass	2500	1.0

Table S36C2f: Typical R-Values for air films: surfaces other than outdoor surfaces

Position of air film	Direction of heat flow	*R-Value*
On a surface with a pitch of not more than 5°	Up	0.11
	Down	0.16
On a surface with a pitch of more than 5° but not more than 30°	Up	0.11
	Down	0.15
On a surface with a pitch of more than 30° but not more than 45°	Up	0.11
	Down	0.13
On a wall	Horizontal	0.12

Table S36C2g: Typical R-Values for air films: outdoor surfaces

Position of air film	Direction of heat flow	*R-Value*
Any	Any	0.03

Table S36C2h: Typical R-Values for airspaces: non-reflective non-ventilated

Position of airspace	Direction of heat flow	*R-Value*
In a roof with a pitch not more than 5° or cathedral ceiling with a 20 mm to 50 mm thick roof airspace	Up	0.15
	Down	0.15
In a roof with a pitch not more than 5° or cathedral ceiling with a more than 50 mm to 300 mm thick roof airspace	Up	0.15
	Down	0.17
In a roof airspace greater than 300 mm thick or with a horizontal ceiling and a roof pitch more than 5°	Up	0.18
	Down	0.28
In a wall	Horizontal	0.16

Table Notes

(1) Linear interpolation may be used to calculate the *R-Value* of the airspace in a roof with an intermediate pitch.

(2) A non-ventilated airspace in a roof is one with continuous cover, such as metal or sarked tiles, and no specific provision for ventilation.

(3) *R-Values* are calculated using AS/NZS 4859.2 based on the following:

(a) summer temperatures of 24°C internally and 36°C externally for heat transfer down; and

(b) winter temperatures of 18°C internally and 12°C externally for heat transfer up; and

(c) average of summer and winter results for horizontal heat transfer (e.g. in walls).

(4) A non-ventilated airspace in a wall is one where there is no express provision for airflow through it and openings to the external environment do not exceed more than 500 mm^2 per metre of length in the horizontal direction.

(5) A non-ventilated airspace in a wall for the purposes of Note (4) includes a wall with drainage openings or weepholes that are open vertical joints in the outer leaf of a *cavity* masonry wall, which are not regarded as ventilation openings.

Table S36C2i: Typical R-Values for airspaces: reflective non-ventilated

Position of airspace	Direction of heat flow	*R-Value*
In a wall with an inner reflective surface of 0.05 emittance and a 20 mm to 100 mm airspace to the wall lining	Horizontal	0.61

Position of airspace	Direction of heat flow	*R-Value*
In a wall with a central reflective membrane with an inner surface emittance of 0.05 and a 20 mm to 100 mm airspace from the membrane to the wall lining, and an outer anti-glare emittance of 0.08 and a 20 mm to 100 mm airspace to the wall cladding	Horizontal	1.1
In a wall with an outer anti-glare reflective surface of 0.08 emittance and a 20 mm to 100 mm airspace to the wall cladding	Horizontal	0.53

Table Notes

(1) A non-ventilated airspace in a wall is one where there is no express provision for airflow through it and openings to the external environment do not exceed 500 mm^2 per metre of length in the horizontal direction.

(2) A non-ventilated airspace in a wall for the purposes of Note (1) includes a wall with drainage openings or weepholes that are open vertical joints in the outer leaf of a *cavity* masonry wall, which are not regarded as ventilation openings.

(3) *R-Values* are calculated using AS/NZS 4859.2 based on the following:

(a) summer temperatures of 24°C internally and 36°C externally for heat transfer down; and

(b) winter temperatures of 18°C internally and 12°C externally for heat transfer up; and

(c) average of summer and winter results for horizontal heat transfer (e.g. in walls); and

(d) emittances are normal emittances of bounding surfaces in accordance with AS 4200.1.

Table S36C2j: Typical R-Values for airspaces: non-reflective ventilated

Position of airspace	Direction of heat flow	*R-Value*
In a roof airspace greater than 300 mm thick or with a horizontal ceiling and a pitch more than 5°	Up	Nil
	Down	0.46

Table S36C2k: Typical R-Values for roof spaces with a reflective surface: Roof space > 300 mm thick or pitched roof with a horizontal ceiling

Direction of heat flow	*R-Value* of reflective airspace	
	Ventilated roof space	Non-ventilated roof space
Up	0.34	0.56
Down	1.36	1.09

Table Notes

(1) A non-ventilated airspace in a roof is one with continuous cover, such as metal or sarked tiles, and no specific provision for ventilation.

(2) A reflective surface is a surface with normal emittance of 0.05 or less, in accordance with AS 4200.1.

Table S36C2l: Typical R-Values for non-ventilated roof spaces with a reflective surface: Flat, skillion or pitched roof (≤5°) with horizontal ceiling, roof space not more than 300 mm thick

Emittance of airspace bounding surfaces	Thickness of roof space	Direction of heat flow	*R-Value* of reflective airspace
Surface 1 emittance 0.9, Surface 2 emittance 0.05	≤ 300 mm	Up	0.43
Surface 1 emittance 0.9, Surface 2 emittance 0.05	20 mm	Down	0.60

Emittance of airspace bounding surfaces	Thickness of roof space	Direction of heat flow	*R-Value* of reflective airspace
Surface 1 emittance 0.9, Surface 2 emittance 0.05	60 mm	Down	1.16
Surface 1 emittance 0.9, Surface 2 emittance 0.05	100 mm to ≤ 300 mm	Down	1.30

Table Notes

(1) A non-ventilated airspace in a roof is one with continuous cover, such as metal, and no specific provision for ventilation.

(2) Linear interpolation may be used to calculate the *R-Value* of an airspace of intermediate thickness.

(3) *R-Values* are calculated using AS/NZS 4859.2 based on the following:

(a) summer temperatures of 24°C internally and 36°C externally for heat transfer down; and

(b) winter temperatures of 18°C internally and 12°C externally for heat transfer up; and

(c) emittances are normal emittances of bounding surfaces in accordance with AS 4200.1.

Table S36C2m: Typical R-Values for non-ventilated roof spaces with a reflective surface: Pitched roof with cathedral ceiling, roof space not more than 300 mm thick

Emittance of airspace bounding surfaces	Thickness of roof space	Direction of heat flow	*R-Value* of reflective airspace		
			15° to not more than 25° pitch	more than 25° to not more than 35° pitch	more than 35° to not more than 45° pitch
Surface 1 emittance 0.9, Surface 2 emittance 0.05	≤ 300 mm	Up	0.43	0.43	0.43
Surface 1 emittance 0.9, Surface 2 emittance 0.05	20 mm	Down	0.59	0.59	0.59
Surface 1 emittance 0.9, Surface 2 emittance 0.05	60 mm	Down	0.91	0.82	0.75
Surface 1 emittance 0.9, Surface 2 emittance 0.05	100 mm to ≤ 300 mm	Down	0.96	0.85	0.76

Table Notes

(1) A non-ventilated airspace in a roof is one with continuous cover, such as metal or sarked tiles, and no specific provision for ventilation.

(2) Linear interpolation may be used to calculate the *R-Value* of the airspace in a roof with an intermediate pitch.

(3) *R-Values* are calculated using AS/NZS 4859.2 based on the following:

(a) summer temperatures of 24°C internally and 36°C externally for heat transfer down; and

(b) winter temperatures of 18°C internally and 12°C externally for heat transfer up; and

(c) emittances are normal emittances of bounding surfaces in accordance with AS 4200.1.

Explanatory Information

Section F of NCC Volume One may require ventilation of roof space in *climate zones* 6, 7 and 8 to manage risks associated with *condensation*.

Specification 37 Calculation of U-Value and solar admittance

S37C1 Scope

[2019: Spec J1.5a: 1]

This specification describes the methods of calculating the U-Value and *solar admittance* of a *wall-glazing construction*.

S37C2 General

[2019: Spec J1.5a: 2]

For determining the aspect of a *wall-glazing construction*—

(a) the northern aspect is at or within 45° of true north; and

(b) the southern aspect is at or within 45° of true south; and

(c) the eastern aspect is within 45° of true east; and

(d) the western aspect is within 45° of true west.

S37C3 U-Value — Method 1 (Single Aspect)

[2019: Spec J1.5a: 3]

(1) For the purposes of this method, a *wall-glazing construction* only includes the walls and *glazing* facing a single aspect.

(2) The *Total System U-Value* of the wall component of a *wall-glazing construction* must be calculated as the inverse of the *Total R-Value*, including allowance for thermal bridging, in accordance with—

(a) AS/NZS 4859.2; or

(b) Specification 38 for *spandrel panels*.

(3) The *Total System U-Value* of a *wall-glazing construction* must be calculated as the area-weighted average of the *Total System U-Value* of each of the components of the *wall-glazing construction*.

(4) The *Total System U-Value* must not exceed the applicable value in J4D6(1).

S37C4 U-Value — Method 2 (Multiple Aspects)

[2019: Spec J1.5a: 4]

(1) For the purposes of this method, a *wall-glazing construction* only includes the walls and *glazing* facing multiple aspects.

(2) The *Total System U-Value* of the wall component of a *wall-glazing construction* must be calculated as the inverse of the *Total R-Value*, including allowance for thermal bridging, in accordance with—

(a) AS/NZS 4859.2; or

(b) Specification 38 for *spandrel panels*.

(3) The *Total System U-Value* of a *wall-glazing construction* must be calculated as the area-weighted average of the *Total System U-Value* of each of the components of the *wall-glazing construction*.

(4) The *Total System U-Value* must not exceed the applicable value in J4D6(1).

S37C5 Solar admittance — Method 1 (Single Aspect)

[2019: Spec J1.5a: 5]

(1) The *solar admittance* of a *wall-glazing construction* must be calculated in accordance with the following formula:

$$SA = \frac{A_{W1} \times S_{W1} \times SHGC_{W1}}{A_{WALL}} + \frac{A_{W2} \times S_{W2} \times SHGC_{W2}}{A_{WALL}} + ...$$

(2) In the formula at (1)—

(a) SA = the *wall-glazing construction solar admittance*; and

(b) $A_{W1}, A_{W2}, ...$ = the area of each *glazing* element; and

(c) $S_{W1}, S_{W2}, ...$ = the shading multiplier for each *glazing* element in accordance with S37C7; and

(d) $SHGC_{W1,W2,...}$ = the *total system SHGC* of each *glazing* element; and

(e) A_{WALL} = the total *wall-glazing construction* area.

(3) The *solar admittance* of the *wall-glazing construction* must not exceed the applicable value in J4D6(5).

S37C6 Solar admittance — Method 2 (Multiple Aspects)

[2019: Spec J1.5a: 6]

(1) The *solar admittance* of *wall-glazing construction* must achieve a representative *air-conditioning* energy value less than that achieved by the reference *solar admittance*, when using the following formula:

$$E_R = A_N \alpha_N SA_N + A_E \alpha_E SA_E + A_S \alpha_S SA_S + A_W \alpha_W SA_W$$

(2) In the formula at (1)—

(a) E_R = the representative *air-conditioning* energy value; and

(b) $A_{N,E,S,W}$ = the area of the *wall-glazing construction* facing each aspect; and

(c) $\alpha_{N,E,S,W}$ = the *solar admittance* weighting coefficient of each aspect equal to—

(i) where the *glazing* area on an aspect is less than 20% of the *wall-glazing construction* area, 0; and

(ii) the values in Table S37C6a and Table S37C6b; and

(d) $SA_{N,E,S,W}$ = the *wall-glazing construction solar admittance* of each aspect—

(i) equal to the applicable value in J4D6(5) in the reference case; and

(ii) calculated in accordance with S37C5(1) in the proposed case.

Table S37C6a: Solar admittance weighting coefficient — Class 2 common area, Class 5, 6, 7, 8 or 9b building or Class 9a building other than a ward area

Aspect	*Climate zone 1*	*Climate zone 2*	*Climate zone 3*	*Climate zone 4*	*Climate zone 5*	*Climate zone 6*	*Climate zone 7*	*Climate zone 8*
Northern	1.47	1.95	1.95	2.05	2.28	2.12	2.40	1.88
Southern	1.00	1.00	1.00	1.00	1.00	1.00	1.00	1.00
Eastern	1.39	1.58	1.63	1.72	1.72	1.62	1.84	1.92
Western	1.41	1.68	1.65	1.69	1.75	1.67	1.92	1.25

Table S37C6b: Solar admittance weighting coefficient — Class 3 or 9c building or Class 9a ward area

Aspect	*Climate zone 1*	*Climate zone 2*	*Climate zone 3*	*Climate zone 4*	*Climate zone 5*	*Climate zone 6*	*Climate zone 7*	*Climate zone 8*
Northern	1.42	1.77	1.72	1.55	1.88	1.52	1.60	1.24
Southern	1.00	1.00	1.00	1.00	1.00	1.00	1.00	1.00
Eastern	1.30	1.49	1.48	1.37	1.48	1.28	1.35	1.26

Aspect	*Climate zone 1*	*Climate zone 2*	*Climate zone 3*	*Climate zone 4*	*Climate zone 5*	*Climate zone 6*	*Climate zone 7*	*Climate zone 8*
Western	1.37	1.54	1.50	1.36	1.52	1.33	1.40	1.05

S37C7 Shading

[2019: Spec J1.5a: 7]

For the purpose of calculating *solar admittance*, the shading multiplier is—

(a) for shading provided by an external permanent projection that extends horizontally on both sides of the *glazing* for the same projection distance P, as shown in Figure S37C7—

(i) the value in Table S37C7a for shading on the northern, eastern or western aspects; or

(ii) the value in Table S37C7b for shading on the southern aspect; or

(b) 0.35 for shading that is provided by an external shading device such as a shutter, blind, vertical or horizontal building screen with blades, battens or slats, which—

(i) is capable of restricting at least 80% of summer solar radiation; and

(ii) if adjustable, will operate automatically in response to the level of solar radiation.

Table S37C7a: Shading multipliers — Northern, eastern and western aspects

G/H	P/H = 0	P/H = 0.1	P/H = 0.2	P/H = 0.3	P/H = 0.4	P/H = 0.5	P/H = 0.6	P/H = 0.7	P/H = 0.8	P/H = 0.9	P/H = 1
0	1.00	0.90	0.80	0.72	0.64	0.57	0.51	0.46	0.41	0.38	0.35
0.1	1.00	0.95	0.89	0.81	0.74	0.66	0.59	0.52	0.47	0.42	0.40
0.2	1.00	0.98	0.94	0.89	0.82	0.75	0.68	0.62	0.56	0.51	0.47
0.3	1.00	1.00	0.97	0.94	0.89	0.84	0.78	0.72	0.66	0.61	0.57
0.4	1.00	1.00	0.99	0.97	0.94	0.90	0.86	0.82	0.77	0.73	0.68
0.5	1.00	1.00	1.00	0.99	0.97	0.95	0.92	0.90	0.86	0.83	0.79

Table S37C7b: Shading multipliers — Southern aspect

G/H	P/H = 0	P/H = 0.1	P/H = 0.2	P/H = 0.3	P/H = 0.4	P/H = 0.5	P/H = 0.6	P/H = 0.7	P/H = 0.8	P/H = 0.9	P/H = 1
0	1.00	0.93	0.87	0.82	0.77	0.73	0.69	0.65	0.62	0.60	0.58
0.1	1.00	0.97	0.93	0.88	0.84	0.79	0.75	0.71	0.67	0.64	0.62
0.2	1.00	0.98	0.96	0.93	0.89	0.85	0.81	0.77	0.73	0.70	0.68
0.3	1.00	0.99	0.98	0.96	0.93	0.90	0.87	0.83	0.80	0.77	0.74
0.4	1.00	1.00	0.99	0.98	0.96	0.94	0.91	0.89	0.86	0.84	0.81
0.5	1.00	1.00	0.99	0.99	0.98	0.96	0.95	0.93	0.91	0.90	0.88

Figure S37C7: Permanent external shading – measurement of P, G and H

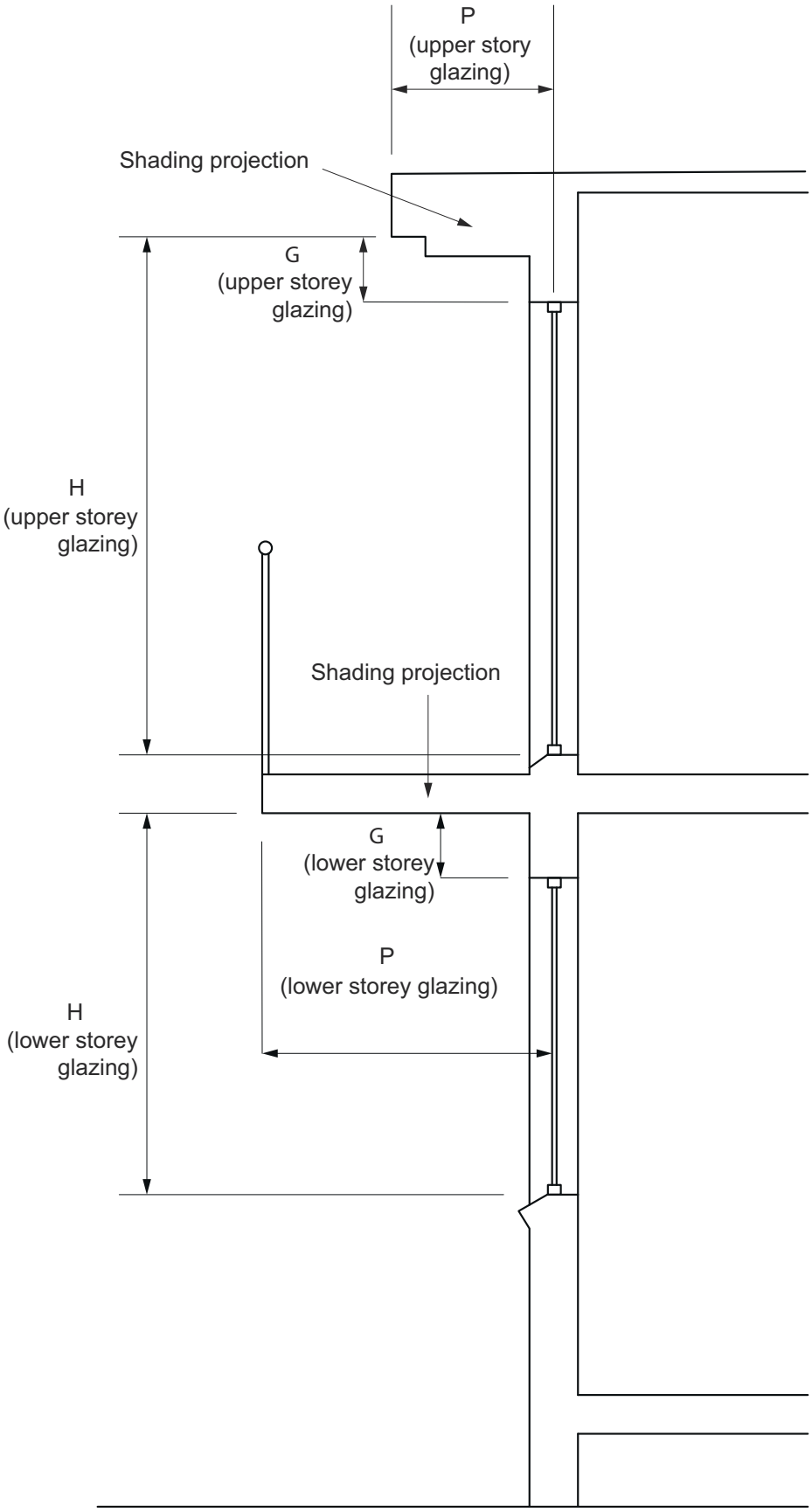

Specification 38 Spandrel panel thermal performance

S38C1 Scope

[2019: Spec J1.5b: 1]

This Specification describes methods of determining the thermal performance of *spandrel panels*.

S38C2 Spandrel panel R-Value: Calculation method 1

[2019: Spec J1.5b: 2]

Spandrel panels are deemed to have the thermal properties nominated in Table S38C2, where—

(a) Configuration 1 consists of—
  (i) a thermally unbroken (bridged) frame; and
  (ii) a centre of *spandrel panel* consisting of—
    (A) a single-glazed opaque or clear face; and
    (B) a 100 mm air gap; and
    (C) a 3 mm aluminium, 0.8 mm galvanised steel or zinc back pan; and

(b) Configuration 2 consists of—
  (i) a thermally unbroken (bridged) frame; and
  (ii) a centre of *spandrel panel* consisting of—
    (A) a double-glazed opaque face; and
    (B) a 50 mm air gap; and
    (C) a 3 mm aluminium, 0.8 mm galvanised steel or zinc back pan; and

(c) Configuration 3 consists of—
  (i) a thermally broken (unbridged) frame; and
  (ii) a centre of *spandrel panel* consisting of—
    (A) a double-glazed clear face; and
    (B) a 50 mm air gap; and
    (C) a 3 mm aluminium, 0.8 mm galvanised steel or zinc back pan; and

(d) Configuration 4 consists of—
  (i) a thermally broken (unbridged) frame; and
  (ii) a centre of *spandrel panel* consisting of—
    (A) a double-glazed low-e clear face; and
    (B) a 50 mm air gap; and
    (C) a 3 mm aluminium, 0.8 mm galvanised steel or zinc back pan.

Table S38C2: Achieved Total R-Value of spandrel panels

Type	No insulation	R0.5 insulation	R1.0 insulation	R1.5 insulation	R2.0 insulation
Configuration 1	0.3	0.39	0.42	0.44	0.45
Configuration 2	0.35	0.41	0.43	0.44	0.45
Configuration 3	0.84	0.96	1.03	1.07	1.09
Configuration 4	0.91	1.00	1.05	1.09	1.11

S38C3 Spandrel panel R-Value: Calculation method 2

[2019: Spec J1.5b: 3]

(1) The *Total system U-Value* of a *spandrel panel* is determined in accordance with the following formula:

$$U_{sp} = \frac{U_{cs}A_{cs} + \Sigma U_{es}A_{es} + \Sigma U_{fs}A_{fs}}{A_{cs} + \Sigma A_{es} + \Sigma A_{fs}}$$

(2) In the formula at (1)—

(a) A_{cs} = the area of the centre region of the *spandrel panel*; and

(b) A_{es} = the area of the edge region of the *spandrel panel*, where the edge has a defined width of 127 mm; and

(c) A_{fs} = the area of the frame region of the *spandrel panel*; and

(d) U_{cs} = the U-value of the centre region of the *spandrel panel*; and

(e) U_{es} = the U-value of the edge region of the *spandrel panel*, where the edge has a defined width of 127 mm; and

(f) U_{fs} = the U-value of the frame region of the *spandrel panel*; and

(g) U_{sp} = the *Total System U-Value* of the *spandrel panel*.

Specification 39 Sub-floor and soil thermal performance

S39C1 Scope

[2019: Spec J1.6: 1]

This Specification describes the thermal performance of sub-floor spaces and soil in direct contact with a floor for the purposes of calculating the *Total R-Value* of a floor.

S39C2 Sub-floor space and soil thermal performance

[2019: Spec J1.6: 2]

(1) Table S39C2a details the *R-Values* considered to be achieved by enclosed sub-floor spaces that are—

(a) mechanically ventilated by not more than 1.5 air changes per hour; or

(b) provided with not more than 150% of the aggregate sub-floor ventilation area *required* by Part F1 and are not mechanically ventilated.

(2) Table S39C2b details the *R-Values* considered to be achieved by the soil for floors that are in direct contact with the ground.

Table S39C2a: R-Value of sub-floor spaces

Ratio of *floor area* (m^2) to floor perimeter (m)	Sub-floor space *R-Value*
1.0	0.10
1.5	0.15
2.0	0.20
2.5	0.25
3.0	0.30
3.5	0.35
4.0	0.40
4.5	0.45
5.0	0.50
5.5	0.55
6.0	0.60
6.5	0.65
7.0	0.70

Table Notes

Where the ratio of *floor area* to floor perimeter is between the values stated, interpolation may be used to determine the sub-floor space *R-Values*.

Table S39C2b: R-Value of soil in contact with a floor

Ratio of *floor area* (m^2) to floor perimeter (m)	Wall thickness of 50 mm	Wall thickness of 100 mm	Wall thickness of 150 mm	Wall thickness of 200 mm	Wall thickness of 250 mm	Wall thickness of 300 mm
1.0	0.4	0.5	0.5	0.6	0.7	0.8
1.5	0.6	0.7	0.7	0.8	0.9	1.0
2.0	0.7	0.8	0.9	1.0	1.1	1.3

Ratio of *floor area* (m^2) to floor perimeter (m)	Wall thickness of 50 mm	Wall thickness of 100 mm	Wall thickness of 150 mm	Wall thickness of 200 mm	Wall thickness of 250 mm	Wall thickness of 300 mm
2.5	0.9	1.0	1.1	1.2	1.3	1.5
3.0	1.0	1.2	1.3	1.4	1.5	1.7
3.5	1.2	1.3	1.5	1.6	1.7	1.9
4.0	1.3	1.5	1.6	1.7	1.9	2.2
4.5	1.5	1.7	1.8	1.9	2.1	2.4
5.0	1.6	1.8	2.0	2.1	2.3	2.6
5.5	1.8	2.0	2.1	2.2	2.4	2.8
6.0	1.9	2.1	2.3	2.4	2.6	2.9
6.5	2.0	2.3	2.4	2.6	2.8	3.1
7.0	2.2	2.4	2.6	2.7	3.0	3.3

Table Notes

(1) Where a wall thickness or ratio of *floor area* to floor perimeter is between the values stated, interpolation may be used to determine the soil *R-Value*.

(2) Wall thickness means the thickness of the *envelope* wall that sits on or around the slab.

Specification 40 Lighting and power control devices

S40C1 Scope

[2019: Spec J6: 1]

This Specification contains the requirements for lighting and power control devices including timers, time switches, motion detectors and daylight control devices.

S40C2 Lighting timers

[2019: Spec J6: 2]

A lighting timer must—

(a) be located within 2 m of every entry door to the space; and

(b) have an indicator light that is illuminated when the artificial lighting is off; and

(c) not control more than—

(i) an area of 100 m^2 with a single push button timer; and

(ii) 95% of the lights in spaces of area more than 25 m^2; and

(d) be capable of maintaining the artificial lighting—

(i) for not less than 5 minutes; and

(ii) for not more than 12 hours if the timer is reset.

S40C3 Time switch

[2019: Spec J6: 3]

(1) A time switch must be—

(a) capable of switching on and off electric power at variable pre-programmed times and on variable pre-programmed days; and

(b) configured so that the lights are switched off at any time the space is designated to be unoccupied.

(2) A time switch for internal lighting must be capable of being overridden by—

(a) a means of turning the lights on, either by—

(i) a manual switch, remote control or an occupant sensing device that on sensing a person's presence, overrides the time switch for a period of up to 2 hours, after which if there is no further presence detected, the time switch must resume control; or

(ii) an occupant sensing device that overrides the time switch upon a person's entry and returns control to the time switch upon the person's exiting, such as a security card reader or remote control; and

(b) a manual "off" switch.

(3) A time switch for external lighting must be—

(a) configured to limit the period the system is switched on to between 30 minutes before sunset and 30 minutes after sunrise is determined or detected including any pre-programmed period between these times; and

(b) capable of being overridden by a manual switch, remote control or a security access system for a period of up to 8 hours, after which the time switch must resume control.

(4) A time switch for boiling water or chilled water storage units must be capable of being overridden by a manual switch or a security access system that senses a person's presence, overrides for a period of up to 2 hours, after which if there is no further presence detected, the time switch must resume control.

S40C4 Motion detectors

[2019: Spec J6: 4]

(1) In a Class 2, 3 or 9c *residential care building* other than within a *sole-occupancy unit*, a motion detector must—

(a) be capable of sensing movement such as by infra-red, ultrasonic or microwave detection or by a combination of these means; and

(b) be capable of detecting a person before they are 1 m into the space; and

(c) other than within a *sole-occupancy unit* of a Class 3 building, not control more than—

(i) an area of 100 m^2; and

(ii) 95% of the lights in spaces of area more than 25 m^2; and

(d) be configured so that the lights are turned off when the space is unoccupied for more than 15 minutes; and

(e) be capable of being overridden by a manual switch only enabling the lights to be turned off.

(2) In a Class 5, 6, 7, 8, 9a or 9b building, a motion detector must—

(a) be capable of sensing movement such as by infra-red, ultrasonic or microwave detection or by a combination of these means; and

(b) be capable of detecting—

(i) a person before they have entered 1 m into the space; and

(ii) movement of 500 mm within the useable part of the space; and

(c) not control more than—

(i) in other than a *carpark*, an area of 500 m^2 with a single sensor or group of parallel sensors; and

(ii) 75% of the lights in spaces using high intensity discharge; and

(d) be configured so that the lights are turned off when the space is unoccupied for more than 15 minutes; and

(e) be capable of being overridden by a manual switch that only enables the lights to be turned off.

(3) When outside a building, a motion detector must—

(a) be capable of sensing movement such as by pressure, infra-red, ultrasonic or microwave detection or by a combination of these means; and

(b) be capable of detecting a person within a distance from the light equal to—

(i) twice the mounting height; or

(ii) 80% of the ground area covered by the light's beam; and

(c) not control more than five lights; and

(d) be operated in series with a photoelectric cell or astronomical time switch so that the light will not operate in daylight hours; and

(e) be configured so that the lights are turned off when the area is unoccupied for more than 15 minutes; and

(f) have a manual override switch which is reset after a maximum period of 4 hours.

(4) When in a *fire-isolated stairway*, *fire-isolated passageway* or *fire-isolated ramp*, a motion detector must—

(a) be capable of sensing movement such as by infra-red, ultrasonic or microwave detection or by a combination of these means; and

(b) be capable of detecting—

(i) movement of 500 mm within the useable part of the space; and

(ii) a person before they have entered 1 m into the space; and

(c) be configured so that the lights dim to a 30% peak power or less when the space is unoccupied for more than 15 minutes.

S40C5 Daylight sensor and dynamic lighting control device

[2019: Spec J6: 5]

(1) A daylight sensor and dynamic control device for artificial lighting must—

(a) for switching on and off—

(i) be capable of having the switching level set point adjusted between 50 and 1000 lux; and

(ii) have—

(A) a delay of more than 2 minutes; and

(B) a differential of more than 100 lux for a sensor controlling high pressure discharge lighting, and 50 lux for a sensor controlling other than high pressure discharge lighting; and

(b) for dimmed or stepped switching, be capable of reducing the power consumed by the controlled lighting in proportion to the incident daylight on the working plane either—

(i) continuously down to a power consumption that is less than 50% of full power; or

(ii) in no less than 4 steps down to a power consumption that is less than 50% of full power.

(2) Where a daylight sensor and dynamic control device has a manual override switch, the manual override switch must not be able to switch the lights permanently on or bypass the lighting controls.

Specification 44 Calculation of heating load limit, cooling load limit and thermal energy load limit

S44C1 Scope

[New for 2022]

This Specification contains the method of calculating the *heating load* limit, *cooling load* limit and *thermal energy load* limit for compliance with J1P2 and H6P1.

S44C2 Heating load limit

[New for 2022]

The *heating load* limit of a space, measured in MJ/m^2.annum, is equal to the greater of—

(a) 4; and

(b) $((0.0044 \times HDH) - 5.9) \times F_H$, where—

(i) HDH = the total annual *heating degree hours* of the building location; and

(ii) F_H = the area adjustment factor for the *heating load* limit, determined in accordance with Table S44C2.

Table S44C2: Area adjustment factors for the heating load limit

Total area of *habitable rooms* (A_H)	Area adjustment factor (F_H)
≤ 50 m^2	1.37
> 50 m^2 to ≤ 350 m^2	$(5.11 \times 10^{-6}) A_H{}^2 - (3.82 \times 10^{-3}) A_H + 1.55$
> 350 m^2	0.84

S44C3 Cooling load limit

[New for 2022]

(1) The *cooling load* limit of a space, measured in MJ/m^2.annum, is calculated in accordance with the following formula:

$$CLL = (5.4 + 0.00617 \times (CDH + 1.85DGH)) \times F_C$$

(2) In the formula at (1)—

(a) CLL = the *cooling load* limit (MJ/m^2.annum); and

(b) CDH = the total annual *cooling degree hours* of the building location; and

(c) DGH = the total annual *dehumidification gram hours* of the building location; and

(d) F_C = the area adjustment factor for the *cooling load* limit, determined in accordance with Table S44C3.

Table S44C3: Area adjustment factors for the cooling load limit

Total area of the *habitable rooms* (A_H)	Area adjustment factor (F_C)
≤ 50 m^2	1.34
> 50 m^2 and ≤ 200 m^2	$(1.29 \times 10^{-5}) A_H{}^2 - (5.55 \times 10^{-3}) A_H + 1.58$

Total area of the *habitable rooms* (A_H)	Area adjustment factor (F_C)
> 200 m^2 and ≤ 1000 m^2	$(3.76\times10^{-7})A_H{}^2-(7.82\times10^{-4})A_H+1.12$
> 1000 m^2	0.71

S44C4 Thermal energy load limit

[New for 2022]

(1) The *thermal energy load* limit of a space, measured in MJ/m^2.annum, is calculated in accordance with the following formula: $TLL=\frac{19.3HLL+22.6CLL-8.4}{T_r+10.74}-15$

(2) In the formula at (1)—

(a) TLL = the *thermal energy load* limit; and

(b) HLL = the *heating load* limit; and

(c) CLL = the *cooling load* limit; and

(d) T_r = the annual average *daily outdoor temperature range*.

Specification 45 Modelling profiles for J1V5

S45C1 Scope

[New for 2022]

This Specification contains the *required* modelling parameters for J1V5.

S45C2 Reference building sole-occupancy unit

[New for 2022]

The *heating loads* and *cooling loads* must be calculated for the *reference building sole-occupancy unit* in accordance with the following:

(a) J3D7, for roofs.

(b) J3D9, for *wall-glazing construction*.

(c) J3D10, for floors.

(d) J4D5, for *roof lights*.

(e) Solar absorptance of 0.6 for *external walls* and roofs.

(f) Open area of 3.8×10^{-4} m^2 per m^2 of zone façade area for façade air infiltration, separate to designed natural *ventilation openings*.

S45C3 Proposed building and reference building

[New for 2022]

(1) The *heating load*, *cooling load* and *energy value* for J1V5(1) and (2) must be calculated for both the proposed building and the *reference building sole-occupancy unit* using the same—

(a) *heating load* or *cooling load* limits, calculated using *heating degree hours*, *cooling degree hours* and *dehumidification gram hours* from Table S45C3a; and

(b) *energy value* factors from Tables S45C3b and S45C3c; and

(c) location, in accordance with S34C3(3); and

(d) climatic data, using the Typical Meteorological Year weather files drawn from the years 1990 to 2015 published by CSIRO; and

(e) adjacent structures and features; and

(f) orientation; and

(g) building form, including—

(i) roof geometry; and

(ii) floor plan; and

(iii) number of *storeys*; and

(iv) location, extent and configuration of ground floors and basements; and

(v) the size and location of *glazing*; and

(vi) external doors; and

(vii) walls between or bounding *sole-occupancy units*; and

(viii) balconies; and

(h) testing standards, including for insulation, *glazing*, water heater and unitary *air-conditioning* equipment; and

(i) *fabric* and *glazing*, including—

(i) thermal resistance of air films including any adjustment factors, moisture content of materials and the like;

and

(ii) internal shading devices, including their colour and criteria for operation; and

(j) system configuration and control of *air-conditioning services* and energy sources other than *renewable energy* generated on-site where present; and

(k) capacity and water usage, for on-site domestic *heated water* systems, assuming—

(i) a consumption rate in accordance with Table A.6.2 of AS/NZS 4234 of 10 L plus 1.25 L per m^2 of *floor area* per *sole-occupancy unit* per day; and

(ii) a seasonal load profile in accordance with Table A.6.3 of AS/NZS 4234; and

(iii) a water inlet temperature of the monthly ground temperature in accordance with Table A.8 of AS/NZS 4234; and

(iv) a water outlet temperature of 60°C; and

(v) the same calculation method for standing losses; and

(l) internal *heating loads*, in accordance with Table S45C3d; and

(m) occupancy profiles, in accordance with Tables S45C3e, S45C3f, S45C3g, S45C3h, S45C3i, S45C3j, S45C3k and S45C3l; and

(n) internal zoning, assuming—

(i) daytime air-conditioned zones include at least one living space and one dining space; and

(ii) kitchen zones are a separate zone using virtual wall partitions at all times, and are only air-conditioned if adjacent to an external façade; and

(iii) each bedroom is a night-time air-conditioned zone; and

(iv) all other zones, including pantries, corridors, en-suites, walk-in robes, bathrooms, toilets, laundries and adjacent roof space or basement are unconditioned; and

(o) the same assumptions and means of calculating the temperature difference across *air-conditioning* zone boundaries; and

(p) the same floor coverings, furniture and fittings density; and

(q) the same internal artificial lighting illumination levels.

(2) Where present, the *air-conditioning services*, including all centralised *domestic services* infrastructure, of each *sole-occupancy unit* of both the proposed building and the *reference building* must be modelled with—

(a) in *climate zone* 2 to 8, a heating thermostat setting of—

(i) 20°C for all conditioned zones from 6:00 am to 12:00 am; and

(ii) 18°C at all other times; and

(b) a cooling thermostat setting of—

(i) in *climate zones* 1, 2 and 3, 27°C for all daytime conditioned zones from 6:00 am to 11:00 pm; and

(ii) in *climate zone* 4, 26°C for all daytime conditioned zones from 6:00 am to 11:00 pm; and

(iii) in *climate zone* 5, 25°C for all daytime conditioned zones from 6:00 am to 11:00 pm; and

(iv) in *climate zones* 6 and 7, 24°C for all daytime conditioned from 6:00 am to 11:00pm; and

(v) in *climate zone* 8, 23°C for all daytime conditioned zones from 6:00 am to 11:00 pm; and

(vi) in all *climate zones*, a constant cooling thermostat setting of 24°C for all night-time conditioned zones.

(3) Natural ventilation of each *sole-occupancy unit* of the proposed building and the *reference building* must be modelled with the same—

(a) frequency of data output, being at least hourly; and

(b) opening flow properties in accordance with Table S45C3m; and

(c) wind pressure coefficients in accordance with Tables S45C3n and S45C3o; and

(d) infiltration values, unless building sealing is verified using J1V4, in which case infiltration values equal to the intended building air change rate at 50 Pa divided by 20 may be used for the proposed building only; and

(e) operation settings as follows:

(i) openings must shut when the external dry bulb temperature is less than or equal to a temperature 1°C higher than the *air-conditioning service* cooling set point; and

(ii) openings must shut when the external dry bulb temperature is greater than or equal to a temperature 1°C lower than the *air-conditioning service* heating set point; and

(iii) openings must remain open for all hours of the year that do not meet the above closing conditions.

Table S45C3a: Annual heating degree hours, cooling degree hours and dehumidification gram hours for various locations

Climate zone	Location	Annual *heating degree hours*	Annual *cooling degree hours*	Annual *dehumidification gram hours*
1	Darwin	0	15770	15364
1	Port Hedland	859	16540	8011
1	Townsville	595	6392	5843
1	Weipa	4	12144	12565
1	Wyndham	126	26975	9184
1	Willis Island	N/A	N/A	N/A
1	Cairns	268	6411	6030
1	Broome	624	14749	14083
2	Rockhampton	3283	6717	1701
2	Amberley	10958	4483	290
2	Brisbane	4744	2228	1415
2	Coffs Harbour	7137	1309	231
2	Mackay	976	3183	5214
2	Gladstone	568	4307	3543
2	Oakey	15392	3979	40
3	Longreach	6002	14634	505
3	Carnarvon	2260	4810	1023
3	Alice Springs	11767	13149	125
3	Charleville	11284	9580	230
3	Halls Creek	611	19571	2109
3	Tennant Creek	1171	18644	1747
3	Mount Isa	3060	15813	1797
3	Newman	6286	15240	645
4	Moree	13986	7291	151
4	Wagga	24833	4678	0
4	Mildura	19003	6300	11
4	Meekatharra	6883	12766	67
4	Oodnadatta	8352	13845	18
4	Kalgoorlie	13048	7763	31
4	Woomera	11754	8434	3
4	Cobar	13663	7616	101
4	Dubbo	20431	5332	36
4	Giles	6259	13082	81
5	Geraldton	6846	6365	10
5	Perth	11024	6084	0

Climate zone	Location	Annual *heating degree hours*	Annual *cooling degree hours*	Annual *dehumidification gram hours*
5	Williamtown	11713	2802	276
5	Adelaide	13066	5132	0
5	Sydney RO (Observatory Hill)	7079	1466	129
5	Bickley	15664	4015	34
5	Swanbourne	6322	3332	63
5	Ceduna	14061	5212	53
5	Mandurah	6081	3131	2
5	Esperance	11009	1884	0
5	Manjimup	20910	2531	0
5	Mascot (Sydney Airport)	6357	1596	110
6	Nowra	14813	2801	56
6	Melbourne RO	14494	2416	0
6	East Sale	27229	1259	0
6	Katanning	21496	3566	14
6	Forrest	15294	8410	14
6	Albany	16131	932	0
6	Mount Lofty	41095	1626	0
6	Tullamarine (Melbourne Airport)	23496	2764	0
6	Mount Gambier	28496	2764	0
6	Moorabbin	20249	2291	0
6	Warnambool	27285	1406	1
6	Cape Otway	19279	960	3
6	Richmond	15607	3917	60
7	Armidale	33374	1039	9
7	Launceston (Ti Tree Bend)	30952	833	0
7	Canberra	35153	2863	0
7	Cabramurra	65831	79	0
7	Hobart	28542	451	0
7	Orange	40325	1192	2
7	Ballarat	37873	2585	2
7	Low Head	26047	80	0
7	Launceston Airport	39444	456	0
7	Learmonth	1646	14048	958
8	Thredbo (Village)	61209	147	0

Table Notes

If location is not listed, use the nearest appropriate.

Table S45C3b: Energy factors based on fuel type

Fuel type	ACT	NSW	NT	Qld	SA	Tas	Vic	WA
Electricity: peak (kWh)	1.55	1.53	1.54	1.53	1.54	1.55	1.53	1.54
Electricity: shoulder (kWh)	1.00	1.00	1.00	1.00	1.00	1.00	1.00	1.00
Electricity: off-peak (kWh)	0.78	0.79	0.79	0.79	0.78	0.78	0.79	0.79
Electricity: cont. load (kWh)	0.68	0.54	1.11	0.76	0.62	0.70	0.82	0.47
Natural gas (MJ)	0.18	0.14	0.16	0.24	0.13	0.21	0.10	0.16
Electricity: PV export (kWh)	0.42	0.39	1.10	0.51	0.35	0.50	0.53	0.29

Table S45C3c: Electricity usage — timing for categories of usage

Hour	Hour span	Weekday
1	24-1	Off-peak
2	1-2	Off-peak
3	2-3	Off-peak
4	3-4	Off-peak
5	4-5	Off-peak
6	5-6	Off-peak
7	6-7	Off-peak
8	7-8	Peak
9	8-9	Peak
10	9-10	Shoulder
11	10-11	Shoulder
12	11-12	Shoulder
13	12-13	Shoulder
14	13-14	Shoulder
15	14-15	Shoulder
16	15-16	Shoulder
17	16-17	Peak
18	17-18	Peak
19	18-19	Peak
20	19-20	Peak
21	20-21	Shoulder
22	21-22	Shoulder
23	22-23	Off-peak
24	23-24	Off-peak

Table S45C3d: Internal heat loads for lighting, cooking and appliances

Sole-occupancy unit area (excluding garage) (m^2)	Occupancy (m^2/person)	Day time lighting power density (6:00 am to 6:00 pm) (W/m^2)	Night-time lighting power density (6:00 pm to 6:00 am) (W/m^2)	Cooking in kitchen zone only (W/m^2 kitchen area)	Appliances (except oven) in whole *sole-occupancy unit* (W/m^2)
≤ 100	41.2	4.0	4.0	36.2	4.38
> 100 to ≤ 125	44.3	4.0	4.0	34.7	3.52
> 125 to ≤ 150	47.8	4.0	4.0	28.9	2.99
> 150 to ≤ 175	51.7	4.0	4.0	24.8	2.60
> 175 to ≤ 200	55.8	4.0	4.0	25.3	2.26
> 200 to ≤ 225	60.0	4.0	4.0	22.5	2.02
> 225 to ≤ 250	64.4	4.0	4.0	20.2	1.84
> 250 to ≤ 275	68.9	4.0	4.0	18.4	1.68
> 275 to ≤ 300	73.3	4.0	4.0	16.9	1.55
> 300 to ≤ 325	77.5	4.0	4.0	15.6	1.44
> 325 to ≤ 350	81.6	4.0	4.0	14.5	1.34
> 350 to ≤ 375	85.4	4.0	4.0	13.5	1.26
> 375	89.0	4.0	4.0	12.7	1.19

Table S45C3e: Lighting schedules for daytime zones

Time period (local standard time)	December to February	June to August	March to May, September to November
12:00 am to 1:00 am	0%	0%	0%
1:00 am to 2:00 am	0%	0%	0%
2:00 am to 3:00 am	0%	0%	0%
3:00 am to 4:00 am	0%	0%	0%
4:00 am to 5:00 am	0%	0%	0%
5:00 am to 6:00 am	0%	0%	0%
6:00 am to 7:00 am	5%	10%	5%
7:00 am to 8:00 am	5%	10%	5%
8:00 am to 9:00 am	0%	0%	0%
9:00 am to 10:00 am	0%	0%	0%
10:00 am to 11:00 am	0%	0%	0%
11:00 am to 12:00 pm	0%	0%	0%
12:00 pm to 1:00 pm	0%	0%	0%
1:00 pm to 2:00 pm	0%	0%	0%
2:00 pm to 3:00 pm	0%	0%	0%
3:00 pm to 4:00 pm	0%	0%	0%
4:00 pm to 5:00 pm	5%	5%	5%
5:00 pm to 6:00 pm	15%	20%	20%
6:00 pm to 7:00 pm	25%	30%	25%
7:00 pm to 8:00 pm	30%	35%	30%
8:00 pm to 9:00 pm	25%	30%	30%
9:00 pm to 10:00 pm	20%	25%	25%

Time period (local standard time)	December to February	June to August	March to May, September to November
10:00 pm to 11:00 pm	10%	15%	15%
11:00 pm to 12:00 am	0%	0%	0%

Table S45C3f: Lighting schedules for night-time zones

Time period (local standard time)	December to February	June to August	March to May, September to November
12:00 am to 1:00 am	0%	0%	0%
1:00 am to 2:00 am	0%	0%	0%
2:00 am to 3:00 am	0%	0%	0%
3:00 am to 4:00 am	0%	0%	0%
4:00 am to 5:00 am	0%	0%	0%
5:00 am to 6:00 am	0%	0%	0%
6:00 am to 7:00 am	5%	10%	5%
7:00 am to 8:00 am	5%	10%	5%
8:00 am to 9:00 am	0%	0%	0%
9:00 am to 10:00 am	0%	0%	0%
10:00 am to 11:00 am	0%	0%	0%
11:00 am to 12:00 pm	0%	0%	0%
12:00 pm to 1:00 pm	0%	0%	0%
1:00 pm to 2:00 pm	0%	0%	0%
2:00 pm to 3:00 pm	0%	0%	0%
3:00 pm to 4:00 pm	0%	0%	0%
4:00 pm to 5:00 pm	0%	0%	0%
5:00 pm to 6:00 pm	15%	20%	20%
6:00 pm to 7:00 pm	25%	30%	25%
7:00 pm to 8:00 pm	30%	35%	30%
8:00 pm to 9:00 pm	25%	30%	30%
9:00 pm to 10:00 pm	20%	25%	25%
10:00 pm to 11:00 pm	10%	15%	10%
11:00 pm to 12:00 am	0%	0%	0%

Table S45C3g: Cooking schedules

Time period (local standard time)	December to February	June to August	March to May, September to November
12:00 am to 1:00 am	0%	0%	0%
1:00 am to 2:00 am	0%	0%	0%
2:00 am to 3:00 am	0%	0%	0%
3:00 am to 4:00 am	0%	0%	0%
4:00 am to 5:00 am	0%	0%	0%
5:00 am to 6:00 am	0%	0%	0%
6:00 am to 7:00 am	0%	0%	0%
7:00 am to 8:00 am	5%	5%	5%
8:00 am to 9:00 am	10%	10%	10%

Time period (local standard time)	December to February	June to August	March to May, September to November
9:00 am to 10:00 am	15%	15%	15%
10:00 am to 11:00 am	10%	15%	10%
11:00 am to 12:00 pm	15%	15%	15%
12:00 pm to 1:00 pm	15%	20%	20%
1:00 pm to 2:00 pm	15%	25%	20%
2:00 pm to 3:00 pm	15%	20%	20%
3:00 pm to 4:00 pm	15%	15%	15%
4:00 pm to 5:00 pm	20%	25%	20%
5:00 pm to 6:00 pm	30%	50%	40%
6:00 pm to 7:00 pm	60%	100%	80%
7:00 pm to 8:00 pm	70%	90%	80%
8:00 pm to 9:00 pm	40%	40%	40%
9:00 pm to 10:00 pm	20%	20%	20%
10:00 pm to 11:00 pm	10%	10%	10%
11:00 pm to 12:00 am	5%	5%	5%

Table S45C3h: Appliance schedule for all zones

Time period (local standard time)	December to February	June to August	March to May, September to November
12:00 am to 1:00 am	45%	45%	45%
1:00 am to 2:00 am	40%	40%	40%
2:00 am to 3:00 am	35%	40%	35%
3:00 am to 4:00 am	35%	40%	35%
4:00 am to 5:00 am	35%	40%	35%
5:00 am to 6:00 am	40%	40%	40%
6:00 am to 7:00 am	50%	55%	50%
7:00 am to 8:00 am	60%	75%	65%
8:00 am to 9:00 am	50%	55%	50%
9:00 am to 10:00 am	45%	50%	50%
10:00am to 11:00 am	45%	55%	50%
11:00 am to 12:00 pm	45%	50%	45%
12:00 pm to 1:00 pm	45%	50%	45%
1:00 pm to 2:00 pm	45%	50%	45%
2:00 pm to 3:00 pm	45%	50%	45%
3:00 pm to 4:00 pm	45%	50%	45%
4:00 pm to 5:00 pm	70%	85%	75%
5:00 pm to 6:00 pm	85%	100%	90%
6:00 pm to 7:00 pm	75%	85%	80%
7:00 pm to 8:00 pm	60%	70%	65%
8:00 pm to 9:00 pm	65%	75%	70%
9:00 pm to 10:00 pm	60%	70%	65%
10:00 pm to 11:00 pm	55%	60%	55%
11:00 pm to 12:00 am	50%	55%	50%

Table S45C3i: Occupancy schedules

Time period (local standard time)	Weekdays	Weekends
12:00 am to 1:00 am	0%	0%
1:00 am to 2:00 am	0%	0%
2:00 am to 3:00 am	0%	0%
3:00 am to 4:00 am	0%	0%
4:00 am to 5:00 am	0%	0%
5:00 am to 6:00 am	0%	0%
6:00 am to 7:00 am	30%	30%
7:00 am to 8:00 am	30%	30%
8:00 am to 9:00 am	100%	30%
9:00 am to 10:00 am	100%	100%
10:00 am to 11:00 am	50%	100%
11:00 am to 12:00 pm	50%	100%
12:00 pm to 1:00 pm	50%	100%
1:00 pm to 2:00 pm	50%	50%
2:00 pm to 3:00 pm	50%	50%
3:00 pm to 4:00 pm	50%	50%
4:00 pm to 5:00 pm	100%	50%
5:00 pm to 6:00 pm	100%	50%
6:00 pm to 7:00 pm	100%	100%
7:00 pm to 8:00 pm	100%	100%
8:00 pm to 9:00 pm	100%	100%
9:00 pm to 10:00 pm	30%	100%
10:00 pm to 11:00 pm	30%	30%
11:00 pm to 12:00 am	0%	0%

Table S45C3j: Heating, ventilation and air-conditioning schedules for daytime zones

Time period (local standard time)	Heating, ventilation and *air-conditioning* on/off
12:00 am to 1:00 am	Off
1:00 am to 2:00 am	Off
2:00 am to 3:00 am	Off
3:00 am to 4:00 am	Off
4:00 am to 5:00 am	Off
5:00 am to 6:00 am	Off
6:00 am to 7:00 am	On
7:00 am to 8:00 am	On
8:00 am to 9:00 am	On
9:00 am to 10:00 am	On
10:00 am to 11:00 am	On
11:00 am to 12:00 pm	On
12:00 pm to 1:00 pm	On
1:00 pm to 2:00 pm	On
2:00 pm to 3:00 pm	On

Time period (local standard time)	Heating, ventilation and *air-conditioning* on/off
3:00 pm to 4:00 pm	On
4:00 pm to 5:00 pm	On
5:00 pm to 6:00 pm	On
6:00 pm to 7:00 pm	On
7:00 pm to 8:00 pm	On
8:00 pm to 9:00 pm	On
9:00 pm to 10:00 pm	On
10:00 pm to 11:00 pm	On
11:00 pm to 12:00 am	Off

Table Notes

If windows are open in accordance with S45C3(3)(e), the heating, ventilation and air-conditioning schedule must be Off.

Table S45C3k: Occupancy schedules for night-time zones

Time period (local standard time)	Weekdays	Weekends
12:00 am to 1:00 am	100%	100%
1:00 am to 2:00 am	100%	100%
2:00 am to 3:00 am	100%	100%
3:00 am to 4:00 am	100%	100%
4:00 am to 5:00 am	100%	100%
5:00 am to 6:00 am	100%	100%
6:00 am to 7:00 am	50%	50%
7:00 am to 8:00 am	50%	50%
8:00 am to 9:00 am	50%	50%
9:00 am to 10:00 am	0%	0%
10:00 am to 11:00 am	0%	0%
11:00 am to 12:00 pm	0%	0%
12:00 pm to 1:00 pm	0%	0%
1:00 pm to 2:00 pm	0%	0%
2:00 pm to 3:00 pm	0%	0%
3:00 pm to 4:00 pm	0%	0%
4:00 pm to 5:00 pm	0%	0%
5:00 pm to 6:00 pm	0%	0%
6:00 pm to 7:00 pm	50%	50%
7:00 pm to 8:00 pm	50%	50%
8:00 pm to 9:00 pm	50%	50%
9:00 pm to 10:00 pm	100%	100%
10:00 pm to 11:00 pm	100%	100%
11:00 pm to 12:00 am	100%	100%

Table S45C3l: Heating, ventilation and air-conditioning schedules for night-time zones

Time period (local standard time)	All days, heating, ventilation and *air-conditioning* on/off
12:00 am to 1:00 am	On

Time period (local standard time)	All days, heating, ventilation and *air-conditioning* on/off
1:00 am to 2:00 am	On
2:00 am to 3:00 am	On
3:00 am to 4:00 am	On
4:00 am to 5:00 am	On
5:00 am to 6:00 am	On
6:00 am to 7:00 am	On
7:00 am to 8:00 am	On
8:00 am to 9:00 am	On
9:00 am to 10:00 am	Off
10:00 am to 11:00 am	Off
11:00 am to 12:00 pm	Off
12:00 pm to 1:00 pm	Off
1:00 pm to 2:00 pm	Off
2:00 pm to 3:00 pm	Off
3:00 pm to 4:00 pm	Off
4:00 pm to 5:00 pm	Off
5:00 pm to 6:00 pm	Off
6:00 pm to 7:00 pm	On
7:00 pm to 8:00 pm	On
8:00 pm to 9:00 pm	On
9:00 pm to 10:00 pm	On
10:00 pm to 11:00 pm	On
11:00 pm to 12:00 am	On

Table Notes

If windows are open in accordance with S45C3(3)(e), the Heating, ventilation and air-conditioning schedule must be Off.

Table S45C3m: Window opening area percentage

Window type	Opening area
Any *window* with restricted opening due to safety requirements	10%
Sliding and double hung	45%
Casement, awning, louvre, bi-fold, pivot, tilt and turn and French	90%

Table S45C3n: Wind pressure coefficients for natural ventilation of low-rise buildings (total height less than 12 m)

Exposure type	Façade component	Wind direction (0° perpendicular to face)				
		0	45	90	135	180
Exposed	Wall	0.70	035	-0.50	-0.40	-0.20
	Roof pitch < 10 degrees	-0.80	-0.70	-0.60	-0.50	-0.40
	Roof pitch 10 to 30 degrees	-0.40	-0.50	-0.60	-0.50	-0.40

Exposure type	Façade component	Wind direction (0° perpendicular to face)				
		0	45	90	135	180
	Roof pitch > 30 degrees	0.30	-0.40	-0.60	-0.40	-0.50
Semi-exposed	Wall	0.40	0.10	-0.30	-0.35	-0.20
	Roof pitch < 10 degrees	-0.60	-0.50	-0.40	-0.50	-0.60
	Roof pitch 10 to 30 degrees	-0.35	-0.45	-0.55	-0.45	-0.35
	Roof pitch > 30 degrees	0.30	-0.50	-0.60	-0.50	-0.50
Sheltered	Wall	0.20	0.05	-0.25	-0.30	-0.25
	Roof pitch < 10 degrees	-0.50	-0.50	-0.40	-0.50	-0.50
	Roof pitch 10 to 30 degrees	-0.30	-0.40	-0.50	-0.40	-0.30
	Roof pitch > 30 degrees	0.25	-0.30	-0.50	-0.30	-0.40

Table Notes

Pressure coefficient exposure categories are defined as follows:

(a) Exposed – no obstructions surrounding the building (e.g. open fields or bodies of water).

(b) Semi-exposed – some obstructions comparable to the height of the building on some but not all sides.

(c) Sheltered – obstructions comparable to the height of the building on all sides.

Table S45C3o: Wind pressure coefficients for natural ventilation of high-rise building (total height more than 12 m)

Exposure type	Façade component	Wind direction (0° perpendicular to face)				
		0	45	90	135	180
Exposed	Wall h/H = 0.0	0.30	0.22	-0.23	-0.43	-0.24
	Wall h/H = 0.2	0.32	0.22	-0.43	-0.44	-0.25
	Wall h/H = 0.4	0.39	0.16	-0.56	-0.43	-0.27
	Wall h/H = 0.6	0.55	0.24	-0.62	-0.41	-0.29
	Wall h/H = 0.8	0.65	0.32	-0.65	-0.39	-0.28
	Wall h/H = 1.0	0.40	0.15	-0.65	-0.38	-0.26
	Flat roof h/H = 0.0	-0.23	-0.23	-0.23	-0.23	-0.23
	Flat roof h/H = 0.2	-0.43	-0.43	-0.43	-0.43	-0.43
	Flat roof h/H = 0.4	-0.56	-0.56	-0.56	-0.56	-0.56
	Flat roof h/H = 0.6	-0.62	-0.62	-0.62	-0.62	-0.62
	Flat roof h/H = 0.8	-0.65	-0.65	-0.65	-0.65	-0.65
	Flat roof h/H = 1.0	-0.65	-0.65	-0.65	-0.65	-0.65

Exposure type	Façade component	Wind direction (0° perpendicular to face)				
		0	45	90	135	180
Semi-exposed	Wall h/H = 0.0	0.19	0.08	-0.15	-0.28	-0.15
	Wall h/H = 0.2	0.20	0.08	-0.28	-0.29	-0.16
	Wall h/H = 0.4	0.25	0.10	-0.36	-0.28	-0.18
	Wall h/H = 0.6	0.36	0.16	-0.40	-0.27	-0.19
	Wall h/H = 0.8	0.42	0.20	-0.42	-0.25	-0.18
	Wall h/H = 1.0	0.26	0.10	-0.42	-0.25	-0.17
	Flat roof h/H = 0.0	-0.15	-0.15	-0.15	-0.15	-0.15
	Flat roof h/H = 0.2	-0.28	-0.28	-0.28	-0.28	-0.28
	Flat roof h/H = 0.4	-0.36	-0.36	-0.36	-0.36	-0.36
	Flat roof h/H = 0.6	-0.40	-0.40	-0.40	-0.40	-0.40
	Flat roof h/H = 0.8	-0.42	-0.42	-0.42	-0.42	-0.42
	Flat roof h/H = 1.0	-0.42	-0.42	-0.42	-0.42	-0.42
Sheltered	Wall h/H = 0.0	0.10	0.04	-0.08	-0.15	-0.08
	Wall h/H = 0.2	0.11	0.04	-0.15	-0.15	-0.08
	Wall h/H = 0.4	0.13	0.05	-0.19	-0.15	-0.09
	Wall h/H = 0.6	0.19	0.08	-0.21	-0.14	-0.10
	Wall h/H = 0.8	0.22	0.11	-0.22	-0.13	-0.09
	Wall h/H = 1.0	0.32	0.05	-0.22	-0.13	-0.09
	Flat roof h/H = 0.0	-0.08	-0.08	-0.08	-0.08	-0.08
	Flat roof h/H = 0.2	-0.15	-0.15	-0.15	-0.15	-0.15
	Flat roof h/H = 0.4	-0.19	-0.19	-0.19	-0.19	-0.19
	Flat roof h/H = 0.6	-0.21	-0.21	-0.21	-0.21	-0.21
	Flat roof h/H = 0.8	-0.22	-0.22	-0.22	-0.22	-0.22
	Flat roof h/H = 1.0	-0.22	-0.22	-0.22	-0.22	-0.22

Table Notes

(1) Pressure coefficient exposure categories are defined as follows:

(a) Exposed – no obstructions surrounding the building (e.g. open fields or bodies of water).

(b) Semi-exposed – some obstructions comparable to the height of the building on some but not all sides.

(c) Sheltered – obstructions comparable to the building height on all sides.

(2) h = height of natural ventilation opening above ground.

(3) H = height of roof of building above ground.

Schedule 1 Definitions

Abbreviations

Symbols

Glossary

Abbreviations

Abbreviation	Definitions
ABCB	Australian Building Codes Board
AC	Alternating Current
ACC	Acrylic conformal coating
ACL	Acrylic latex
ACP	Aluminium Composite Panel
AIRAH	Australian Institute of Refrigeration, Air conditioning and Heating
ANSI	American National Standards Institute
AS	Australian Standard
ASET	Available Safe Egress Time
ASHRAE	American Society of Heating, Refrigerating and Air Conditioning Engineers
ASTM	American Society for Testing and Materials
BAL	Bushfire Attack Level
BCA	Building Code of Australia
BE	Fire blocks evacuation route
CAN	National Standard of Canada
CCT	Correlated Colour Temperature
CF	Challenging fire
CHF	Critical Heat Flux
CIBSE	Chartered Institution of Building Services Engineers
CRF	Critical Radiant Flux
CRI	Colour Rendering Index
CS	Fire starts in a concealed space
C_{SHGC}	Constant for solar heat gain
CSIRO	Commonwealth Scientific and Industrial Research Organisation
C_U	Constant for conductance
DC	Direct Current
FED	Fractional Effective Dose
FI	Fire brigade intervention
FRL	Fire Resistance Level
FZ	Flame Zone
GEMS	Greenhouse and Energy Minimum Standards
GRP	Glass fibre reinforced polyester
HDG	Hot dip galvanising
HRR	Heat Release Rate
HS	Horizontal fire spread
IS	Rapid fire spread involving internal surface linings
ISO	International Organisation for Standardisation
IZS	Inorganic zinc silicate
LED	Light-Emitting Diode
MEPS	Minimum Energy Performance Standards

Abbreviation	Definitions
NABERS	National Australian Built Environment Rating System
NASH	National Association of Steel-Framed Housing
NATA	National Association of Testing Authorities Australia
NatHERS	Nationwide House Energy Rating Scheme
NCC	National Construction Code
NSF	National Sanitation Foundation
PBDB	Performance-based design brief
PCA	Plumbing Code of Australia
PMV	Predicted Mean Vote
ppm	parts per million
PUR	Polyurethane
PVC	Polyvinyl chloride
RC	Robustness check
RSET	Required Safe Egress Time
R_W	Weighted sound reduction index
SF	Smouldering fire
SHGC	Solar Heat Gain Coefficient
SL	Square mesh
SS	Structural stability and other property
STC	Sound Transmission Class
TM	Trench mesh
UF	Unexpected catastrophic failure
UPVC	Unplasticized polyvinyl chloride
UT	Fire in normally unoccupied room threatening occupants of other rooms
U-Value	Thermal transmittance
VS	Vertical fire spread involving external cladding or external openings
WC	Water closet

Symbols

Symbols	Definitions
°	degree(s)
°C	degree(s) Celsius
°CDB	degree(s) Celsius Dry Bulb
°CWB	degree(s) Celsius Wet Bulb
-e/MJ	equivalent per Megajoule(s)
µm	micrometre
µg/N.s	Micrograms per newton-second
dB(A)	decibels “A” scale weighting network
f’c	Characteristic compressive strength of concrete at 28 days
f’y	Yield stress used in design
G	Permanent load
J	Joule(s)
J/kg.K	Joules per kilogram degree Kelvin
J/s.m^2	Joules per second square metre
K	Kelvin(s)
kg	kilogram(s)
kg/m	kilogram(s) per metre
kg/m^2	kilogram(s) per square metre
kg/m^3	kilogram(s) per cubic metre
kJ/m^2.hour	kilojoules per square metre hour
km	kilometre(s)
kPa	kilopascal(s)
kW/m^2	kilowatt(s) per square metre
kW$_{heating}$	kilowatt(s) of heating
kWr	kilowatt(s) of refrigeration
L	litre(s)
L/min	litre(s) per minute
L/s	litre(s) per second
L/s.m^2	litre(s) per second square metre
Lumens/W	Lumens per Watt
lx	lux
m	metre(s)
m/s	metre(s) per second
m^2	square metre(s)
m^2.K/W	square metre Kelvin(s) per Watt
m^3	cubic metre(s)
m^3/hour	cubic metre(s) per hour
m^3/s	cubic metre(s) per second
mcd/m^2	millicandelas per square metre
min	minute(s)

Symbols	Definitions
MJ/hour	Megajoules per hour
MJ/m^2.annum	Megajoules per square metre annum
mm	millimetre(s)
mm^2	square millimetre(s)
MW	megawatt(s)
N	newton(s)
N/m	Newton(s) per metre
Pa	pascal(s)
Pa/m	pascal(s) per metre
Q	Imposed load
s	second(s)
ULS	Ultimate limit state
V	Volt(s)
W	Watt(s)
$W_{input\ power}$	Watts of input power
$Wr/W_{input\ power}$	Watts of thermal refrigeration per watt of input power
W/kW_{rej}	Watts per kilowatt of heat rejected
$Wm^{-1}K^{-1}$	Watts per metre degree Kelvin
W/m^2	Watts per square metre
°south	degree south
%	percent
>	greater than
<	less than
≤	less than or equal to
≥	equal to or more than

Glossary

Above ground rainwater tank: A rainwater tank that is not in any way set into the ground.

Accessible: Having features to enable use by people with a disability.

Accessway: A continuous *accessible* path of travel (as defined in AS 1428.1) to, into or within a building.

Accredited Testing Laboratory: One of the following:

(a) An organisation accredited by the National Association of Testing Authorities Australia (NATA) to undertake the relevant tests.

(b) An organisation outside Australia accredited to undertake the relevant tests by an authority recognised by NATA through a mutual recognition agreement.

(c) An organisation recognised as being an Accredited Testing Laboratory under legislation at the time the test was undertaken.

Activity support level: The degree to which occupants can undertake activities with respect to the likely *activity traits* and *occupant traits*.

Explanatory Information

This term is used to articulate whether the height of a room or space is sufficient and by what degree. This is achieved by having regard to the room or space's intended use by occupants, through consideration of the defined terms '*activity traits*' and '*occupant traits*'.

Activity traits: For the purposes of—

(a) Volume One, the features of the activities that will be undertaken in a *habitable room* or space; or

(b) Volume Two, the features of the activities that will be undertaken in a room or space.

Explanatory Information

This term is used to describe the characteristics of the activities that will be undertaken in a room or space.

For example, the activities likely to be undertaken in a bedroom, and the associated features are—

- sleeping — a person laying horizontally; and
- resting — a person laying horizontally or sitting upright on the bed; and
- leisure activities, such as reading a book — a person sitting upright on the bed, with enough space to stretch their arms vertically; and
- dressing/changing clothes — a person standing with enough space to stretch their arms vertically.

Administering body: The body responsible for administering the *WaterMark Certification Scheme*.

Aged care building: A Class 9c building for residential accommodation of aged persons who, due to varying degrees of incapacity associated with the ageing process, are provided with *personal care services* and 24 hour staff assistance to evacuate the building during an emergency.

NSW Aisle

SA Agriculture

Air-conditioning: For the purposes of Section J of Volume One, a *service* that actively cools or heats the air within a space, but does not include a *service* that directly—

(a) cools or heats cold or hot rooms; or

(b) maintains specialised conditions for equipment or processes, where this is the main purpose of the *service*.

Alarm zone: For the purposes of Specification 23, an area of a building protected by one or more smoke alarms connected to one alarm circuit.

Alpine area: An area given in Figure 1 and in Table 1 for specific locations, and is—

(a) likely to be subject to significant snowfalls; and

(b) in New South Wales, the ACT or Victoria more than 1200 m above the Australian Height Datum; and

(c) in Tasmania more than 900 m above the Australian Height Datum.

Table 1: Alpine areas where snow loads are significant

Location	Map identifier
Kiandra (NSW)	1
Mount Kosciuszko (NSW)	2
Perisher Valley (NSW)	3
Thredbo (NSW)	4
Cabramurra (NSW)	5
Charlotte Pass Village (NSW)	6
Diggers Creek (NSW)	7
Guthega Village (NSW)	8
Mount Blue Cow (NSW)	9
Mount Selwyn (NSW)	10
Perisher Range (NSW)	11
Rules Point (NSW)	12
Sawpit Creek (NSW)	13
Smiggin Holes (NSW)	14
Smiggin Range (NSW)	15
Three Mile Dam (NSW)	16
Wilsons Valley (NSW)	17
Falls Creek (Vic.), including Summit Area, Sun Valley and Village Bowl	18
Mount Baw Baw (Vic.)	19
Mount Buffalo (Vic.), including Chalet, Dingo Dell and Tatra	20
Mount Buller (Vic.), including Baldy and Village	21
Mount Hotham (Vic.), including Davenport and Village Centre	22
Dinner Plain (Vic.)	23
Lake Mountain (Vic.)	24
Mount Stirling (Vic.)	25
Ben Lomond Ski Field (Tas.)	26
Cradle Valley (Tas.)	27
Great Lake Area (Tas.)	28
Mount Field Ski Field (Tas.)	29

Figure 1: Alpine areas

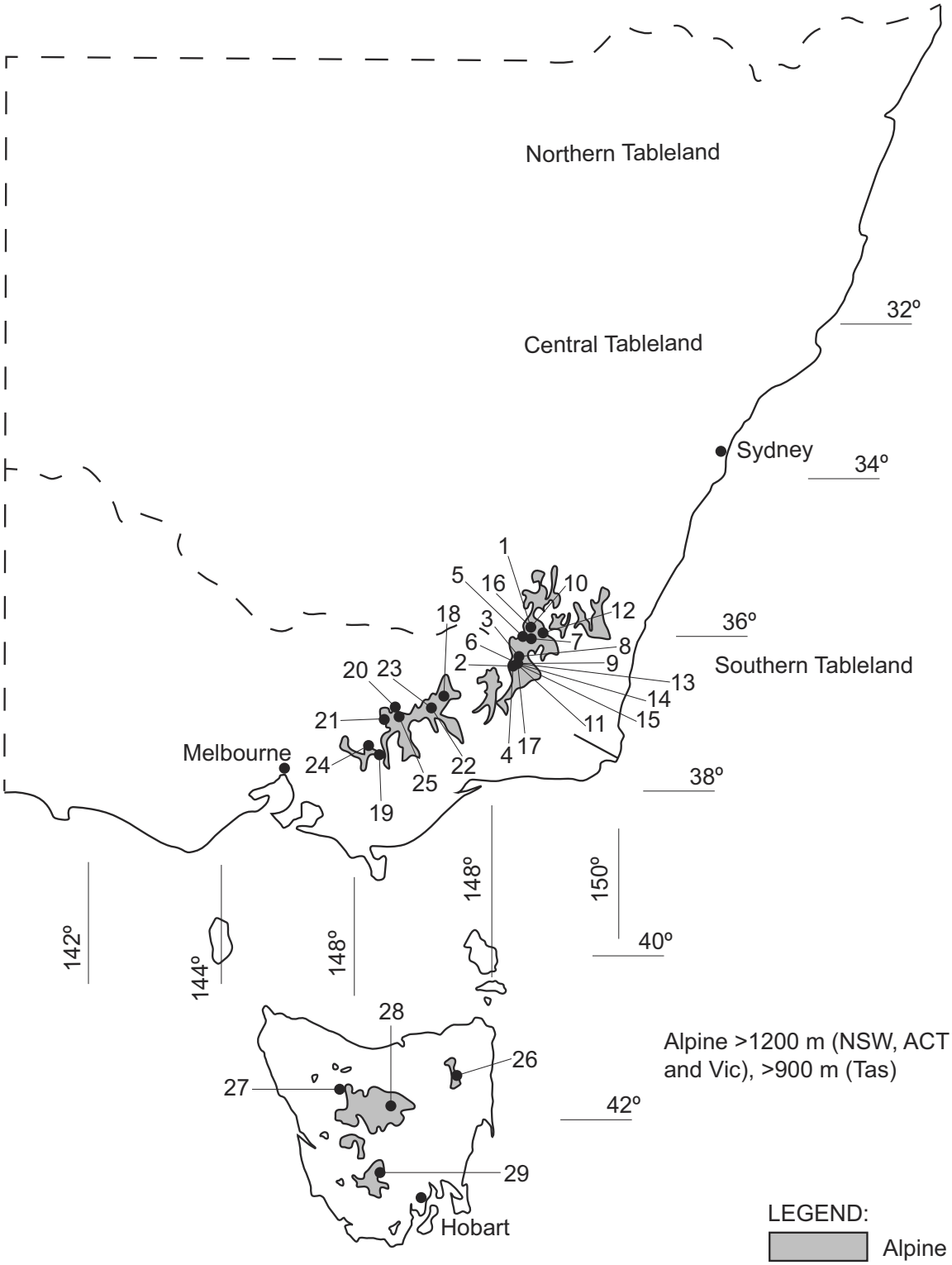

Figure Notes

This map is approximate only and altitude above Australian Height Datum must be used to determine whether the building falls into an *alpine area* region.

Explanatory Information

Alpine areas are located in New South Wales, Victoria and Tasmania.

Alpine areas are areas 1200 m or more above Australian Height Datum (AHD) for New South Wales, Australian Capital Territory and Victoria, and 900 m or more above AHD for Tasmania, as shown in Figure 1.

Alpine areas are considered to receive significant snowfalls (snowfalls that result in an average snow accumulation on

the ground of 175 mm or greater). Regions in New South Wales, the Australian Capital Territory and Victoria between 600 – 1200 m AHD are considered to be sub-alpine areas and may receive significant snowfalls, however unlike alpine areas the snow is unlikely to accumulate.

It is recommended that the *appropriate authority* be consulted to determine whether the building is located in an alpine area. AS/NZS 1170.3 also contains further detail in the identification of alpine areas and the altitude of the alpine regions of Australia.

In the Australian Capital Territory, Canberra is not designated as an alpine area as snow loads are not considered significant.

Alteration: In relation to a building, includes an addition or extension to a building.

Aluminium Composite Panel (ACP): Flat or profiled aluminium sheet material in composite with any type of materials.

Amenity: An attribute which contributes to the health, physical independence, comfort and well-being of people.

Ancillary element: An element that is secondary to and not an integral part of another element to which it is attached.

Annual exceedance probability: The probability that a given rainfall total accumulated over a given duration will be exceeded in any one year.

Annual greenhouse gas emissions: The theoretical amount of greenhouse gas emissions attributable to the energy used annually by a building's *services*, excluding kitchen exhaust and the like.

Appropriate authority: For the purposes of the Fire Safety Verification Method, means the relevant authority with the statutory responsibility to determine the particular matter satisfies the relevant *Performance Requirement*.

Explanatory Information

The *Appropriate Authority* is typically the building surveyor or building certifier charged with the statutory responsibility to determine building compliance and issue the building permit / approval and occupancy certificate / approval.

NSW Appropriate authority

Appropriate authority: The relevant authority with the statutory responsibility to determine the particular matter.

Appropriately qualified person: A person recognised by the *appropriate authority* as having qualifications and/or experience in the relevant discipline in question.

Approved disposal system: A system for the disposal of sewage, sullage or stormwater approved by an authority having jurisdiction.

Articulated masonry: Masonry construction in which special provisions have been made for movement by articulation.

NSW Assembly building

SA Assembly building

Assembly building: A building where people may assemble for—

(a) civic, theatrical, social, political or religious purposes including a library, theatre, public hall or place of worship; or

(b) educational purposes in a *school*, *early childhood centre*, preschool, or the like; or

(c) entertainment, recreational or sporting purposes including—

(i) a discotheque, nightclub or a bar area of a hotel or motel providing live entertainment or containing a dance floor; or

(ii) a cinema; or

(iii) a sports stadium, sporting or other club; or

(d) transit purposes including a bus station, railway station, airport or ferry terminal.

Assessment Method: A method that can be used for determining that a *Performance Solution* or *Deemed-to-Satisfy Solution* complies with the *Performance Requirements*.

Assumed cooling thermostat set point: The cooling thermostat set point used to calculate *cooling degree hours*, and equal to $17.8 + 0.31T_m$, where T_m is the mean January outdoor air temperature measured in degrees Celsius.

Atrium: A space within a building that connects 2 or more *storeys* and—

(a) is enclosed at the top by a floor or roof (including a glazed roof structure); and

(b) includes any adjacent part of the building not separated by an appropriate barrier to fire; but

(c) does not include a stairwell, rampwell or the space within a *shaft*; and

(d) for the purposes of (a) a space is considered enclosed if the area of the enclosing floor or roof is greater than 50% of the area of the space, measured in plan, of any of the *storeys* connected by the space.

Atrium well: A space in an *atrium* bounded by the perimeter of the openings in the floors or by the perimeter of the floors and the *external walls*.

NSW Auditorium

Automatic: Designed to operate when activated by a heat, smoke or fire sensing device.

Available safe egress time (ASET)

(1) The time between ignition of a fire and the onset of untenable conditions in a specific part of a building.

(2) The time referred to in (1) is the calculated interval between the time of ignition of a fire and the time at which conditions become such that the occupant is unable to take effective action to escape to a place of safety.

Average daylight factor: The ratio of the illumination level within a room provided by daylight to the level of daylight outside the building during overcast conditions.

Average specific extinction area: The average specific extinction area for smoke as determined by AS 5637.1.

Backflow prevention device: An air gap, break tank or mechanical device that is designed to prevent the unplanned reversal of flow of water or *contaminants* into the water service or a *Network Utility Operator's* water supply.

Backpressure: A reversal of water flow caused by the downstream pressure becoming greater than the supply pressure.

Backsiphonage: A reversal of flow of water caused by negative pressure in the distributing pipes of a water service or supply.

Backstage: A space associated with, and adjacent to, a *stage* in a Class 9b building for scenery, props, equipment, dressing rooms, or the like.

Battery system: One or more chemical cells connected in series, parallel or a combination of the two for the purpose of electrical energy storage.

Blockage: An obstruction within a water service or sanitary *plumbing* or *drainage* system.

Boiler: A vessel or an arrangement of vessels and interconnecting parts, wherein steam or other vapour is generated, or water or other liquid is heated at a pressure above that of the atmosphere, by the application of fire, the products of combustion, electrical power, or similar high temperature means, and—

(a) includes superheaters, reheaters, economisers, boiler piping, supports, mountings, valves, gauges, fittings, controls, the boiler settings and directly associated equipment; but

(b) excludes a fully flooded or pressurised system where water or other liquid is heated to a temperature lower than the normal atmospheric boiling temperature of the liquid.

Bond breaker: A material used as part of a *waterproofing system* that prevents the *membrane* bonding to the substrate, bedding or lining.

Breaking surf: Any area of salt water in which waves break on an average of at least 4 days per week but does not include white caps or choppy water.

Explanatory Information

Breaking surf normally occurs in areas exposed to the open sea. Breaking surf does not normally occur in sheltered areas, such as that which occurs around Port Phillip Bay, Sydney Harbour, Swan River, Derwent River and similar locations.

Building complexity criteria: Are used to determine the building complexity level of all or part of a building in accordance with Table 2, where building complexity criteria are as follows:

(a) Attributes — the building is designed or constructed with any of the following sub-criteria:

(i) An *effective height* of more than 25 m.

(ii) One or more *Performance Solutions* are used to demonstrate compliance with the *Performance Requirements* relating to material and systems for structural safety.

(iii) One or more *Performance Solutions* are used to demonstrate compliance with the *Performance Requirements* relating to material and systems for fire safety.

(iv) Is located in an area prone to natural disaster or adverse environmental conditions.

(b) Class 2 — all or part of the building is Class 2 of three or more *storeys*.

(c) Occupant numbers — the building is to be occupied by more than 100 people determined in accordance with D2D18.

(d) Occupant characteristics — the building is to be occupied by more than 10 people who will require assistance to evacuate the building in an emergency.

(e) Importance Level — the building is determined to be Importance Level 4 or 5.

Notes

The NCC currently does not include corresponding technical requirements relating to the defined term 'building complexity criteria' and the various building complexity levels. It is intended that these terms will be integrated into future editions of the NCC.

Table 2: Building complexity level

Building complexity level	Criteria
Low	The building meets only one of the following *building complexity criteria*: (a) (Attributes), (b) (Class 2), (c) (Occupant numbers) or (d) (Occupant characteristics)
Medium	The building meets two of the following *building complexity criteria*: (a) (Attributes), (b) (Class 2), (c) (Occupant numbers) or (d) (Occupant characteristics)
High	The building meets three of the following *building complexity criteria*: (a) (Attributes), (b) (Class 2), (c) (Occupant numbers) or (d) (Occupant characteristics)
Very high	The building meets all of the following *building complexity criteria*: (a) (Attributes), (b) (Class 2), (c) (Occupant numbers) and (d) (Occupant characteristics); or (e) (Building Importance Level 4 or 5)

Buried rainwater tank: A rainwater tank that is set into and completely covered by earth.

Burnout: Exposure to fire for a time that includes *fire growth*, full development, and decay in the absence of intervention or automatic suppression, beyond which the fire is no longer a threat to building elements intended to perform *loadbearing* or fire separation functions, or both.

SA Brush fence

SA Bulk grain storage facility

Carpark: A building that is used for the parking of motor vehicles but is neither a *private garage* nor used for the servicing of vehicles, other than washing, cleaning or polishing.

Cavity: A void between 2 leaves of masonry, or in masonry veneer construction, a void between a leaf of masonry and the supporting frame.

Cavity wall: For the purposes of F3V1 and H2V1, a wall that incorporates a drained cavity.

SA Cell type silo

TAS Centre-based care class 4 facility

TAS Centre-based care class 5 facility

Certificate of Accreditation: A certificate issued by a State or Territory accreditation authority stating that the properties and performance of a building material or method of construction or design fulfil specific requirements of the NCC.

Certificate of Conformity: A certificate issued under the ABCB scheme for products and systems certification stating that the properties and performance of a building material or method of construction or design fulfil specific requirements of the NCC.

Certification body: A person or organisation operating in the field of material, product, form of construction or design

certification that has been accredited by the Joint Accreditation System of Australia and New Zealand (JAS-ANZ), and is accredited for a purpose other than as part of the CodeMark Australia Certification Scheme or *WaterMark Certification Scheme*.

Characteristic: The occupant data to be used in the modelling of access solutions which define how an occupant interacts with a building, i.e. occupant movement speeds, turning ability, reach capability, perception of luminance contrast and hearing threshold.

VIC Children's service

Clad frame: Timber or metal frame construction with exterior timber or sheet wall cladding that is not sensitive to minor movement and includes substructure masonry walls up to 1.5 m high.

Climate zone: An area defined in Figure 2 and in Table 3 for specific locations, having energy efficiency provisions based on a range of similar climatic characteristics.

Table 3: Climate zones for thermal design

State	Location	*Climate zone*
ACT	Canberra	7
NSW	Albury	4
NSW	Armidale	7
NSW	Batemans Bay	6
NSW	Bathurst	7
NSW	Bega	6
NSW	Bellingen Shire - Dorrigo Plateau	7
NSW	Bellingen Shire - Valley & seaboard	2
NSW	Bourke	4
NSW	Broken Hill	4
NSW	Byron Bay	2
NSW	Cobar	4
NSW	Coffs Harbour	2
NSW	Dubbo	4
NSW	Goulburn	7
NSW	Grafton	2
NSW	Griffith	4
NSW	Ivanhoe	4
NSW	Lismore	2
NSW	Lord Howe Island	2
NSW	Moree	4
NSW	Newcastle	5
NSW	Nowra	6
NSW	Orange	7
NSW	Perisher - Smiggins	8
NSW	Port Macquarie	5
NSW	Sydney East	5
NSW	Sydney West	6
NSW	Tamworth	4
NSW	Thredbo	8
NSW	Wagga Wagga	4
NSW	Williamtown	5

State	Location	*Climate zone*
NSW	Wollongong	5
NSW	Yass	6
NT	Alice Springs	3
NT	Darwin	1
NT	Elliot	3
NT	Katherine	1
NT	Renner Springs	3
NT	Tennant Creek	3
QLD	Birdsville	3
QLD	Brisbane	2
QLD	Bundaberg	2
QLD	Cairns	1
QLD	Cooktown	1
QLD	Cunnamulla	3
QLD	Gladstone	2
QLD	Hervey Bay	2
QLD	Hughenden	3
QLD	Longreach	3
QLD	Mackay	2
QLD	Mount Isa	3
QLD	Normanton	1
QLD	Rockhampton	2
QLD	Roma	3
QLD	Southport	2
QLD	Toowoomba	5
QLD	Townsville	1
QLD	Warwick	5
QLD	Weipa	1
SA	Adelaide	5
SA	Bordertown	6
SA	Ceduna	5
SA	Cook	4
SA	Elliston	5
SA	Kingscote	6
SA	Leigh Creek	5
SA	Lobethal	6
SA	Loxton	5
SA	Naracoorte	6
SA	Marree	4
SA	Mount Gambier	6
SA	Murray Bridge	6
SA	Oodnadatta	4
SA	Port Augusta	4
SA	Port Lincoln	5

State	Location	*Climate zone*
SA	Renmark	5
SA	Tarcoola	4
SA	Victor Harbour	6
SA	Whyalla	4
TAS	Burnie	7
TAS	Bicheno	7
TAS	Deloraine	7
TAS	Devonport	7
TAS	Flinders Island	7
TAS	Hobart	7
TAS	Huonville	7
TAS	King Island	7
TAS	Launceston	7
TAS	New Norfolk	7
TAS	Oatlands	7
TAS	Orford	7
TAS	Rossarden	7
TAS	Smithton	7
TAS	St Marys	7
TAS	Zeehan	7
VIC	Anglesea	6
VIC	Ararat	7
VIC	Bairnsdale	6
VIC	Ballarat	7
VIC	Benalla	6
VIC	Bendigo	6
VIC	Bright	7
VIC	Colac	6
VIC	Dandenong	6
VIC	Echuca	4
VIC	Geelong	6
VIC	Hamilton	7
VIC	Horsham	6
VIC	Melbourne	6
VIC	Mildura	4
VIC	Portland	6
VIC	Sale	6
VIC	Shepparton	4
VIC	Swan Hill	4
VIC	Traralgon	6
VIC	Wangaratta	7
VIC	Warrnambool	6
VIC	Wodonga	6
WA	Albany	6

State	Location	*Climate zone*
WA	Balladonia	4
WA	Broome	1
WA	Bunbury	5
WA	Carnarvon	3
WA	Christmas Island	1
WA	Cocos Island	1
WA	Derby	1
WA	Esperance	5
WA	Exmouth	1
WA	Geraldton	5
WA	Halls Creek	3
WA	Kalgoorlie-Boulder	4
WA	Karratha	1
WA	Meekatharra	4
WA	Northam	4
WA	Pemberton	6
WA	Perth	5
WA	Port Hedland	1
WA	Wagin	4
WA	Wyndham	1

Figure 2: **Climate zones for thermal design**

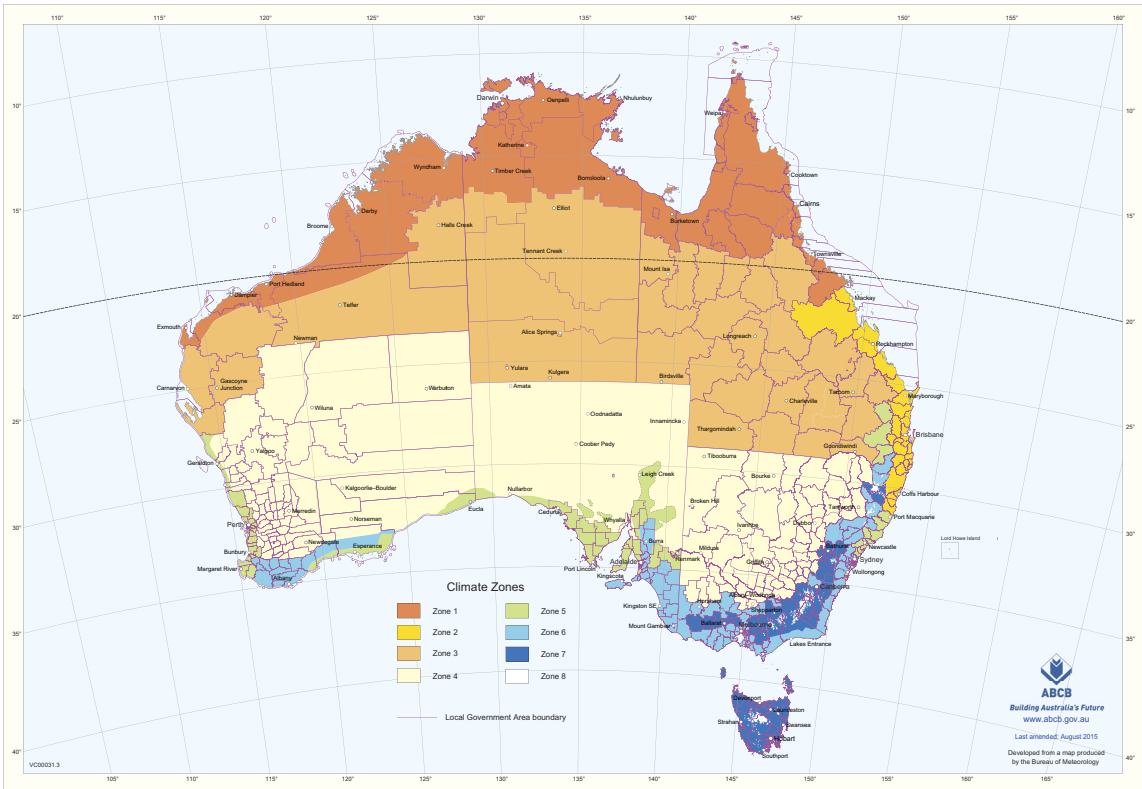

Figure Notes

(1) This map can be viewed in enlargeable form on the ABCB website at abcb.gov.au.

(2) A Zone 4 area in South Australia, other than a council area, at an altitude greater than 300 m above the

Australian Height Datum is to be considered as Zone 5.

(3) The areas referred to in (2) have been defined in an enlarged format on the following maps produced by the Department of Planning, Transport and Infrastructure (these maps can be viewed on the Government of South Australia website at www.sa.gov.au):

(a) Adelaide Hills Climate Zone Map.

(b) Barossa Council Climate Zone Map.

(c) Regional Council of Goyder Climate Zone Map.

(4) Locations in *climate zone* 8 are in *alpine areas*.

Combustible: Applied to—

(a) a material — means combustible as determined by AS 1530.1; and

(b) construction or part of a building — means constructed wholly or in part of combustible materials.

VIC Combustible cladding product

Common wall: For the purposes of—

(a) Volume One, a wall that is common to adjoining buildings.

(b) Volume Two and the ABCB Housing Provisions, a wall that is common to adjoining buildings other than Class 1 buildings.

Condensation: The formation of moisture on the surface of a building element or material as a result of moist air coming into contact with a surface which is at a lower temperature.

Conditioned space: For the purposes of—

(a) Volume One, a space within a building, including a ceiling or under-floor supply air plenum or return air plenum, where the environment is likely, by the intended use of the space, to have its temperature controlled by *air-conditioning*; or

(b) Volume Two, a space within a building that is heated or cooled by the building's *domestic services*, excluding a non-*habitable room* in which a heater with a capacity of not more than 1.2 kW or 4.3 MJ/hour is installed.

Construction activity actions: Actions due to stacking of building materials or the use of equipment, including cranes and trucks, during construction or actions which may be induced by floor to floor propping.

Containment protection: The installation of a *backflow prevention device* at the *point of connection* of a *Network Utility Operator's* water supply to a site.

Contaminant: Any substance (including gases, liquids, solids or micro-organisms), energy (excluding noise) or heat, that either by itself or in combination with the same, similar or other substances, energy or heat, changes or is likely to change the physical, chemical or biological condition of water.

NSW Continental seating

Controlled fill: Material that has been placed and compacted in layers with compaction equipment (such as a vibrating plate) within a defined moisture range to a defined density requirement.

Cooling degree hours: For any one hour when the mean outdoor air temperature is above the *assumed cooling thermostat set point*, the degree Celsius air temperature difference between the mean outdoor air temperature and the *assumed cooling thermostat set point*.

Cooling load: The calculated amount of energy removed from the cooled spaces of the building annually by artificial means to maintain the desired temperatures in those spaces.

Critical radiant flux (CRF): The critical heat flux at extinguishment (CHF in kW/m^2) as determined by AS ISO 9239.1.

Cross-connection: Any actual or potential connection between a water supply and any *contaminant*.

NSW Cross-over

Curtain wall: A non-*loadbearing external wall* that is not a *panel wall*.

Daily outdoor temperature range: The difference between the maximum and minimum temperatures that occur in a day.

Damp-proof course (DPC): A continuous layer of impervious material placed in a masonry wall or pier, or between a wall or pier and a floor, to prevent the upward or downward migration of water.

Deemed-to-Satisfy Provisions: Provisions which are deemed to satisfy the *Performance Requirements*.

Deemed-to-Satisfy Solution: A method of satisfying the *Deemed-to-Satisfy Provisions*.

Defined flood event (DFE): The flood event selected for the management of flood hazard for the location of specific development as determined by the *appropriate authority*.

Defined flood level (DFL): The flood level associated with a *defined flood event* relative to a specified datum (see Figure 3).

Figure 3: Identification of defined flood level, flood hazard level and freeboard

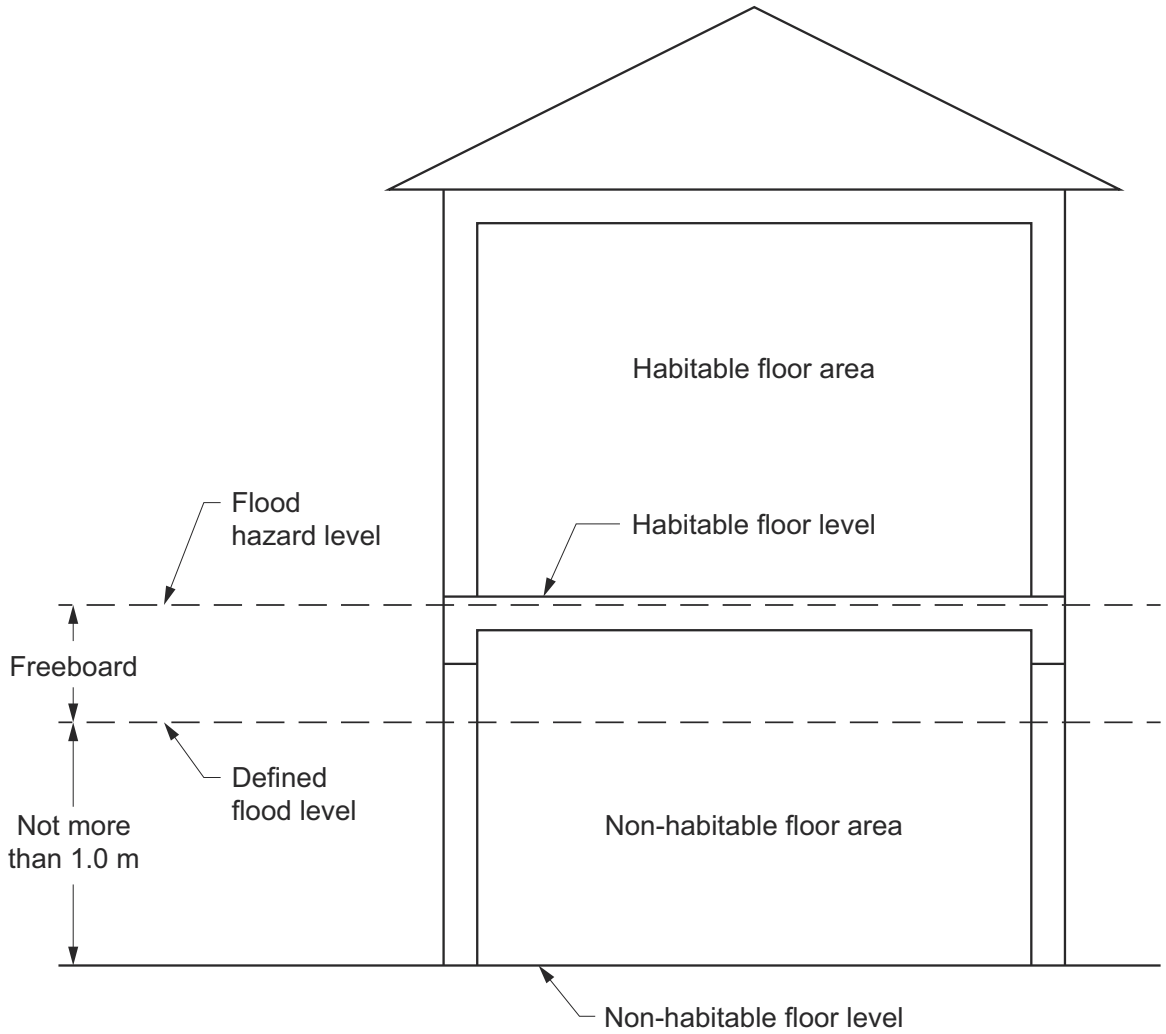

Dehumidification gram hours: For any one hour when the mean humidity is more than 15.7g/kg, the grams per kilogram of absolute humidity difference between the mean outdoor absolute humidity and 15.7g/kg.

NSW Designated bushfire prone area

Designated bushfire prone area: Land which has been designated under a power of legislation as being subject, or likely to be subject, to bushfires.

Design bushfire: The characteristics of a bushfire, its initiation, spread and development, which arises from weather conditions, topography and fuel (vegetation) in a given setting, used to determine *fire actions*.

Design fire: The quantitative description of a representation of a fire within the *design scenario*.

Design scenario: The specific scenario of which the sequence of events is quantified and a *fire safety engineering* analysis is conducted against.

WA Design wind speed

Design wind speed: The design gust wind speed for the area where the building is located, calculated in accordance with AS/NZS 1170.2 or AS 4055 (see Table 4 for wind classes).

Table 4: Wind classes

Non-cyclonic Region A and B	Cyclonic Region C and D
N1, N2, N3	C1
N4, N5, N6 (these wind classes are covered in the ABCB Housing Provisions Part 2.2).	C2, C3, C4 (these wind classes are covered in the ABCB Housing Provisions Part 2.2).

Table Notes

(1) Wind classification map identifying wind regions is contained in ABCB Housing Provisions Part 2.2 (see Figure 2.2.3).

(2) Information on wind classes for particular areas may be available from the *appropriate authority*.

(3) "N" = non-cyclonic winds and "C" = cyclonic winds.

Detention centre: A building in which persons are securely detained by means of the built structure including a prison, remand centre, juvenile detention centre, holding cells or psychiatric detention centre.

NSW Development consent

Direct fix cladding wall: For the purposes of F3V1 and H2V1, means a wall with cladding attached directly to the wall framing without the use of a drained cavity.

Discontinuous construction: Means—

(a) a wall having a minimum 20 mm cavity between 2 separate leaves, and—

(i) for masonry, where wall ties are used to connect leaves, the ties are of the resilient type; and

(ii) for other than masonry, there is no mechanical linkage between the leaves, except at the periphery; and

(b) a staggered stud wall is not deemed to be discontinuous construction.

Display glazing: *Glazing* used to display retail goods in a shop or showroom directly adjacent to a walkway or footpath, but not including that used in a café or restaurant.

Domestic services: The basic engineering systems that use energy or control the use of energy; and—

(a) includes—

(i) heating, *air-conditioning*, mechanical ventilation and artificial lighting; and

(ii) pumps and heaters for *swimming pools* and spa pools; and

(iii) heated water systems; and

(iv) on-site *renewable energy* equipment; but

(b) excludes cooking facilities and portable appliances.

Drainage: Any part of—

(a) a sanitary drainage system, including any liquid trade waste drainage; or

(b) a stormwater drainage system.

Drainage flange: A flange connected to a waste pipe, at the point at which it passes through the floor substrate, to prevent leakage and which enables tile bed drainage into the waste pipe.

Drainage riser: A waste pipe between the floor waste and the drainage system.

Drinking water: Water intended primarily for human consumption but which has other domestic uses.

Explanatory Information

See also the Australian Drinking Water Guidelines produced by the National Health and Medical Research Council.

TAS Early childhood centre

VIC Early childhood centre

Early childhood centre: Any premises or part thereof providing or intending to provide a centre-based education and care service within the meaning of the Education and Care Services National Law Act 2010 (Vic), the Education and Care Services National Regulations and centre-based services that are licensed or approved under State and Territory children's services law, but excludes education and care primarily provided to school aged children in outside school

hours settings.

Effective height: The vertical distance between the floor of the lowest *storey* included in the calculation of *rise in storeys* and the floor of the topmost *storey* (excluding the topmost *storey* if it contains only heating, ventilating, lift or other equipment, water tanks or similar service units).

Efficacy: The degree to which a system achieves a design objective given that it performs to a level consistent with the system specification during the relevant fire scenario.

Electricity network substation: A building in which high voltage supply is converted or transformed and which is controlled by a licensed network service provider designated under a power of legislation.

Electric passenger lift: A power-operated lift for raising or lowering people in a car in which the motion of the car is obtained from an electric motor mechanically coupled to the hoisting mechanism.

Electrohydraulic passenger lift: A power-operated lift for raising or lowering people in a car in which the motion of the car is obtained from the action of liquid under pressure acting on a piston or ram, the pressure being generated by a pump driven by an individual electric motor.

Energy value: The net cost to society including, but not limited to, costs to the building user, the environment and energy networks.

Engaged pier: A pier bonded to a masonry wall by course bonding of masonry units or by masonry ties.

NSW Entertainment venue

Envelope: For the purposes of—

(a) Section J in NCC Volume One, the parts of a building's *fabric* that separate a *conditioned space* or *habitable room* from—

(i) the exterior of the building; or

(ii) a non-*conditioned space* including—

(A) the floor of a rooftop plant room, lift-machine room or the like; and

(B) the floor above a *carpark* or warehouse; and

(C) the *common wall* with a *carpark*, warehouse or the like; or

(b) Part H6 in NCC Volume Two and Section 13 of the ABCB Housing Provisions, the parts of a building's *fabric* that separate artificially heated or cooled spaces from—

(i) the exterior of the building; or

(ii) other spaces that are not artificially heated or cooled.

Equivalent: Equivalent to the level of health, safety and amenity provided by the *Deemed-to-Satisfy Provisions*.

Evacuation route: The continuous path of travel (including *exits*, *public corridors* and the like) from any part of a building, including within a *sole-occupancy unit* in a Class 2 or 3 building or Class 4 part, to a *safe place*.

Evacuation time: The time calculated from when the emergency starts for the occupants of the building to evacuate to a *safe place*.

Exit: Means—

(a) Any, or any combination of the following if they provide egress to a road or *open space*:

(i) An internal or external stairway.

(ii) A ramp.

(iii) A *fire-isolated passageway*.

(iv) A doorway opening to a road or *open space*; or

(b) A *horizontal exit* or a *fire-isolated passageway* leading to a *horizontal exit*.

TAS Expert judgement

Expert judgement: The judgement of an expert who has the qualifications and experience to determine whether a *Performance Solution* or *Deemed-to-Satisfy Solution* complies with the *Performance Requirements*.

Explanatory Information

Contemporary and relevant qualifications and/or experience are necessary to determine whether a *Performance*

Solution complies with the *Performance Requirements*. The level of qualification and/or experience may differ depending on the complexity of the proposal and the requirements of the regulatory authority. Practitioners should seek advice from the authority having jurisdiction or *appropriate authority* for clarification as to what will be accepted.

External wall: For the purposes of—

(a) Volume One, an outer wall of a building which is not a *common wall*; or

(b) Volume Two, an outer wall of a building which is not a *separating wall*.

Extra-low voltage: A *voltage* not exceeding 50 V AC or 120 V ripple-free DC.

Fabric: The basic building structural elements and components of a building including the roof, ceilings, walls, glazing and floors.

SA Farm building

Farm building: A Class 7 or 8 building located on land primarily used for *farming*—

(a) that is—

(i) used in connection with *farming*; or

(ii) used primarily to store one or more *farm vehicles*; or

(iii) a combination of (i) and (ii); and

(b) in which the total number of persons accommodated at any time does not exceed one person per 200 m² of floor area or part thereof, up to a maximum of 8 persons; and

(c) with a total *floor area* of not more than 3500 m².

Farming: Includes—

(a) cultivating, propagating and harvesting plants or fungi or their products or parts, including seeds, spores, bulbs or the like, but does not include forestry; or

(b) maintaining animals in any physical environment for the purposes of—

(i) breeding them; or

(ii) selling them; or

(iii) acquiring and selling their bodily produce such as milk, wool, eggs or the like; or

(c) a combination of (a) and (b),

but does not include forestry or maintaining animals for sport or recreational purposes.

Farm shed: A single *storey* Class 7 or 8 building located on land primarily used for *farming*—

(a) that is—

(i) used in connection with *farming*; or

(ii) used primarily to store one or more *farm vehicles*; or

(iii) a combination of (i) and (ii); and

(b) occupied neither frequently nor for extended periods by people; and

(c) in which the total number of persons accommodated at any time does not exceed 2; and

(d) with a total *floor area* of more than 500 m² but not more than 2000 m².

Farm vehicle: A vehicle used in connection with *farming*.

NSW Film

Finished ground level: The ground level adjacent to footing systems at the completion of construction and landscaping.

Fire actions: Each of the following:

(a) airborne embers; and

(b) burning debris and/or accumulated embers adjacent to building elements; and

(c) heat transfer from combustible materials within the site; and

(d) radiant heat from a bushfire front; and

(e) flame contact from a bushfire front; and

(f) the period of time post fire front subject to collapsing vegetation due to persistent combustion.

Fire brigade: A statutory authority constituted under an Act of Parliament having as one of its functions, the protection of life and property from fire and other emergencies.

Fire brigade station: For the purposes of E1D2(1)(b) and I3D9, means a state or territory government operated premises which is a station for a *fire brigade*.

Fire compartment: Either—

(a) the total space of a building; or

(b) when referred to in—

(i) the *Performance Requirements* — any part of a building separated from the remainder by barriers to fire such as walls and/or floors having an appropriate resistance to the spread of fire with any openings adequately protected; or

(ii) the *Deemed-to-Satisfy Provisions* — any part of a building separated from the remainder by walls and/or floors each having an FRL not less than that *required* for a *fire wall* for that type of construction and where all openings in the separating construction are protected in accordance with the *Deemed-to-Satisfy Provisions* of the relevant Part.

Fire growth: The stage of fire development during which the *heat release rate* and the temperature of the fire are generally increasing.

Fire hazard: The danger in terms of potential harm and degree of exposure arising from the start and spread of fire and the smoke and gases that are thereby generated.

Fire hazard properties: The following properties of a material or assembly that indicate how they behave under specific fire test conditions:

(a) *Average specific extinction area*, *critical radiant flux* and *Flammability Index*, determined as defined in Schedule 1.

(b) *Smoke-Developed Index*, *smoke development rate* and *Spread-of-Flame Index*, determined in accordance with Specification 3.

(c) *Group number* and *smoke growth rate index* ($SMOGRA_{RC}$), determined in accordance with Specification 7.

Fire intensity: The rate of release of calorific energy in watts, determined either theoretically or empirically, as applicable.

Fire-isolated passageway: A corridor, hallway or the like, of *fire-resisting construction*, which provides egress to or from a *fire-isolated stairway* or *fire-isolated ramp* or to a road or *open space*.

Fire-isolated ramp: A ramp within a *fire-resisting* enclosure which provides egress from a *storey*.

Fire-isolated stairway: A stairway within a *fire-resisting shaft* and includes the floor and roof or top enclosing structure.

Fire load: The sum of the net calorific values of the *combustible* contents which can reasonably be expected to burn within a *fire compartment*, including furnishings, built-in and removable materials, and building elements.

Notes

The calorific values must be determined at the ambient moisture content or humidity (the unit of measurement is MJ).

Fire-protected timber: *Fire-resisting* timber building elements that comply with Specification 10.

Fire-protective covering: Any one or more of the following:

(a) 13 mm fire-protective grade plasterboard.

(b) 12 mm cellulose cement flat sheeting complying with AS/NZS 2908.2 or ISO 8336.

(c) 12 mm fibrous plaster reinforced with 13 mm x 13 mm x 0.7 mm galvanised steel wire mesh located not more than 6 mm from the exposed face.

(d) Other material not less fire-protective than 13 mm fire-protective grade plasterboard, fixed in accordance with the normal trade practice for a fire-protective covering.

Fire-resistance level (FRL): The grading periods in minutes determined in accordance with Specifications 1 and 2, for the following criteria—

(a) *structural adequacy*; and

(b) *integrity*; and

(c) *insulation*,

and expressed in that order.

Notes

A dash means there is no requirement for that criterion. For example, 90/–/– means there is no requirement for an FRL for *integrity* and *insulation*, and –/–/– means there is no requirement for an FRL.

Fire-resisting construction: For the purposes of Volume One, means one of the Types of construction referred to in Part C2 of Volume One.

Fire-resisting: For the purposes of—

(a) Volume One, applied to a building element, having an FRL appropriate for that element; or

(b) Volume Two, applied to a *structural member* or other part of a building, having the FRL *required* for that *structural member* or other part.

Fire safety engineering: Application of engineering principles, rules and *expert judgement* based on a scientific appreciation of the fire phenomenon, often using specific *design scenario*, of the effects of fire and of the reaction and behaviour of people in order to—

(a) save life, protect property and preserve the environment and heritage from destructive fire; and

(b) quantify the hazards and risk of fire and its effects; and

(c) mitigate fire damage by proper design, construction, arrangement and use of buildings, materials, structures, industrial processes and transportation systems; and

(d) evaluate analytically the optimum protective and preventive measures, including design, installation and maintenance of active and passive fire and life safety systems, necessary to limit, within prescribed levels, the consequences of fire.

Fire safety system: One or any combination of the methods used in a building to—

(a) warn people of an emergency; or

(b) provide for safe evacuation; or

(c) restrict the spread of fire; or

(d) extinguish a fire,

and includes both active and passive systems.

Fire-source feature: Any one or more of the following:

(a) The far boundary of a road, river, lake or the like adjoining the allotment.

(b) A side or rear boundary of the allotment.

(c) An *external wall* of another building on the allotment which is not a Class 10 building.

Fire wall: A wall with an appropriate resistance to the spread of fire that divides a *storey* or building into *fire compartments*.

Fixed wired: For the purposes of Specification 23, a system of electrical wiring (either AC or DC), in which cables are fixed or supported in position.

Flammability Index: The index number as determined by AS 1530.2.

VIC Flashing

Flashing: A strip or sleeve of impervious material dressed, fitted or built-in to provide a barrier to water movement, or to divert the travel of water, or to cover a joint where water would otherwise penetrate to the interior of a building, and includes the following:

(a) Perimeter flashing: a flashing used at the floor-wall junction.

(b) Vertical flashing: a flashing used at wall junctions within *shower areas*.

Flashover: In relation to *fire hazard properties*, means a *heat release rate* of 1 MW.

Flight: That part of a stair that has a continuous series of *risers*, including *risers* of *winders*, not interrupted by a *landing* or floor.

Explanatory Information

A *flight* is the part of a stair that has a continuous slope created by the nosing line of treads. The length of a *flight* is limited to restrict the distance a person could fall down a stair.

Quarter *landings*, as shown in Explanatory Figure 1, are considered sufficient to halt a person's fall and therefore are considered for the purposes of NCC Volume Two and the ABCB Housing Provisions not to be part of the *flight*.

Figure 1 (explanatory): Identification of stair flights — Plan view

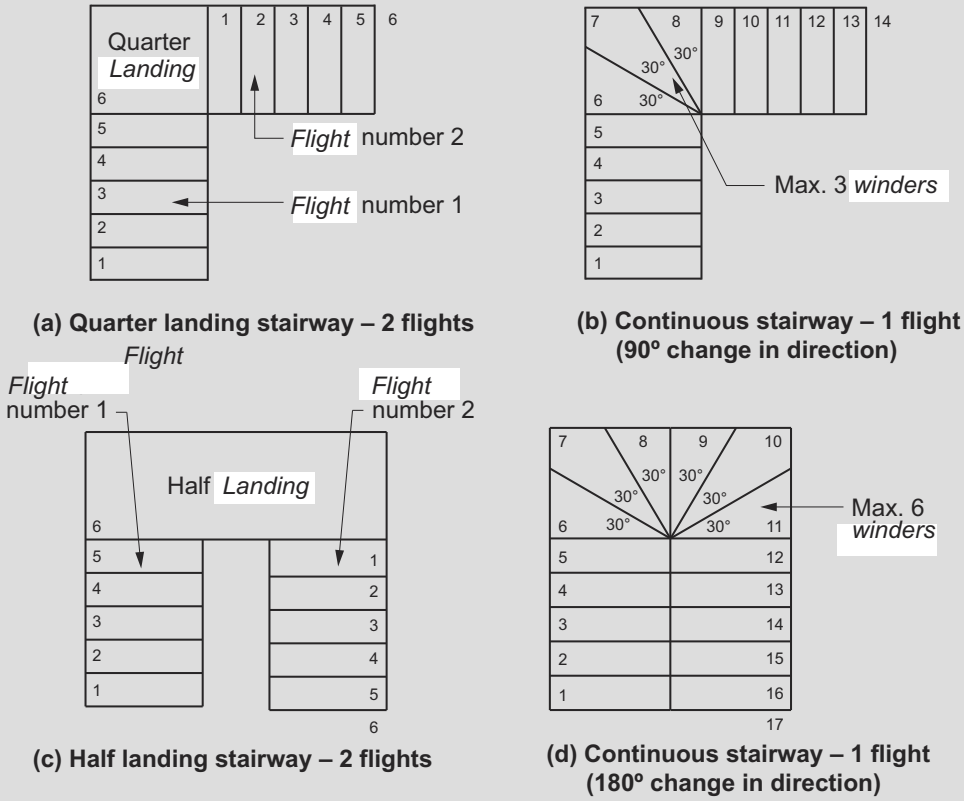

(a) Quarter landing stairway – 2 flights

(b) Continuous stairway – 1 flight (90º change in direction)

(c) Half landing stairway – 2 flights

(d) Continuous stairway – 1 flight (180º change in direction)

VIC Flood hazard area

Flood hazard area: The *site* (whether or not mapped) encompassing land lower than the *flood hazard level* which has been determined by the *appropriate authority*.

Flood hazard level (FHL): The flood level used to determine the height of floors in a building and represents the *defined flood level* plus the *freeboard* (see Figure 3).

Floor area: For the purposes of—

(1) Volume One—

(a) in relation to a building — the total area of all *storeys*; and

(b) in relation to a *storey* — the area of all floors of that *storey* measured over the enclosing walls, and includes—

(i) the area of a *mezzanine* within the *storey*, measured within the finished surfaces of any *external walls*; and

(ii) the area occupied by any *internal wall* or partitions, any cupboard, or other built-in furniture, fixture or fitting; and

(iii) if there is no enclosing wall, an area which has a use that contributes to the *fire load* or impacts on the safety, health or amenity of the occupants in relation to the provisions of the BCA; and

(c) in relation to a room — the area of the room measured within the internal finished surfaces of the walls, and includes the area occupied by any cupboard or other built-in furniture, fixture or fitting; and

(d) in relation to a *fire compartment* — the total area of all floors within the *fire compartment* measured within the finished internal surfaces of the bounding construction, and if there is no bounding construction, includes an area which has a use which contributes to the *fire load*; and

(e) in relation to an *atrium* — the total area of all floors within the *atrium* measured within the finished surfaces

of the bounding construction and if no bounding construction, within the *external walls*.

(2) Volume Two and the ABCB Housing Provisions, in relation to a room, the area of the room measured within the finished surfaces of the walls, and includes the area occupied by any cupboard or other built-in furniture, fixture or fitting (see Figure 4).

Figure 4: Identification of floor area of a room

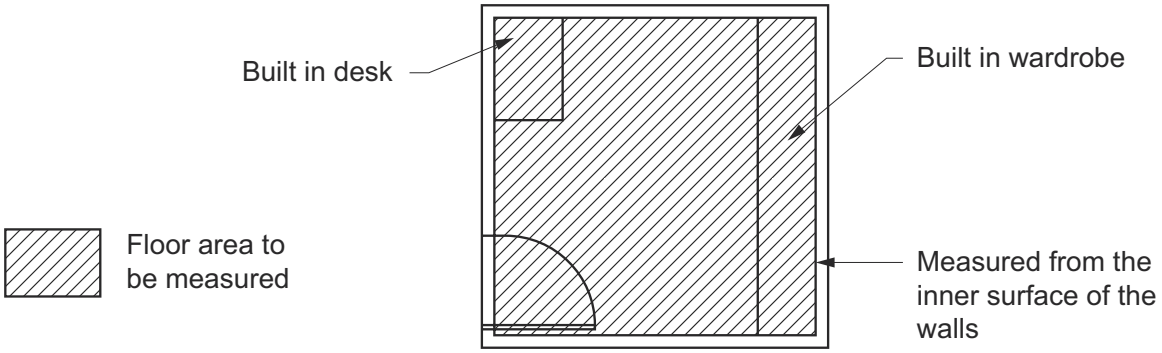

Floor waste: A grated inlet within a graded floor intended to drain the floor surface.

NSW Flying scenery

Foundation: The ground which supports the building (see Figure 5).

Figure 5: Identification of foundation

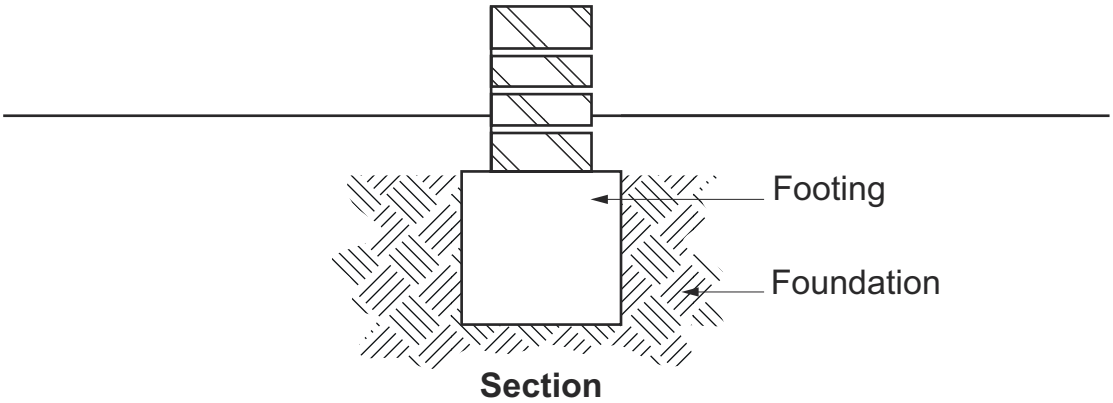

Fractional effective dose (FED): The fraction of the dose (of thermal effects) that would render a person of average susceptibility incapable of escape.

Explanatory Information

The definition for FED has been modified from the ISO definition to be made specific for the Fire Safety *Verification Method*. The use of CO or CO_2 as part of FED is not part of that *Verification Method*. This is because the ability to measure CO in a repeatable test varies by two orders of magnitude for common cellosic fuel.

VIC Freeboard

Freeboard: The height above the *defined flood level* as determined by the *appropriate authority*, used to compensate for effects such as wave action and localised hydraulic behaviour.

Fully developed fire: The state of total involvement of the majority of available combustible materials in a fire.

NSW Garage top dwelling

Glazing: For the purposes of—

(a) Section J of Volume One, except for a *sole-occupancy unit* of a Class 2 building or a Class 4 part of a building—

(i) a transparent or translucent element and its supporting frame located in the *envelope*; and

(ii) includes a *window* other than a *roof light*; or

(b) Section J of NCC Volume One, for a *sole-occupancy unit* of a Class 2 building or a Class 4 part of a building—

(i) a translucent element and its supporting frame located in the external *fabric* of the building; and

(ii) includes a *window* other than a *roof light*; or

(c) Part H6 of NCC Volume Two and Section 13 of the ABCB Housing Provisions—

(i) a transparent or translucent element and its supporting frame located in the external *fabric* of the building; and

(ii) includes a *window* other than a *roof light*.

Going: The horizontal dimension from the front to the back of a tread less any overhang from the next tread or *landing* above (see Figure 11.2.2f in the ABCB Housing Provisions).

Green Star: The building sustainability rating scheme managed by the Green Building Council of Australia.

NSW Grid

Group number: The number of one of 4 groups of materials used in the regulation of *fire hazard properties* and applied to materials used as a finish, surface, lining, or attachment to a wall or ceiling.

Habitable room: A room used for normal domestic activities, and—

(a) includes a bedroom, living room, lounge room, music room, television room, kitchen, dining room, sewing room, study, playroom, family room, home theatre and sunroom; but

(b) excludes a bathroom, laundry, water closet, pantry, walk-in wardrobe, corridor, hallway, lobby, photographic darkroom, clothes-drying room, and other spaces of a specialised nature occupied neither frequently nor for extended periods.

Hazard Rating: A level of potential toxicity that may cause contamination in a *drinking water* system, having a rating of *Low Hazard*, *Medium Hazard* or *High Hazard*, determined in accordance with NCC Volume Three.

Health-care building: A building whose occupants or patients undergoing medical treatment generally need physical assistance to evacuate the building during an emergency and includes—

(a) a public or private hospital; or

(b) a nursing home or similar facility for sick or disabled persons needing full-time care; or

(c) a clinic, day surgery or procedure unit where the effects of the predominant treatment administered involve patients becoming non-ambulatory and requiring supervised medical care on the premises for some time after the treatment.

Heated water: Water that has been intentionally heated; normally referred to as hot water or warm water.

Heating degree hours: For any one hour when the mean outdoor air temperature is less than 15°C, the degrees Celsius temperature difference between the mean outdoor air temperature and 15°C.

Heating load: The calculated amount of energy delivered to the heated spaces of the building annually by artificial means to maintain the desired temperatures in those spaces.

Heat release: The thermal energy produced by combustion (measured in kJ).

Heat release rate (HRR): The rate of thermal energy production generated by combustion, measured in kW (preferred) or MW.

High Hazard: Any condition, device or practice which, in connection with a water supply, has the potential to cause death.

High wind area: A region that is subject to *design wind speed* more than N3 or C1 (see Table 4).

Hob: The upstand at the perimeter of a *shower area*.

Horizontal exit: A *required* doorway between 2 parts of a building separated from each other by a *fire wall*.

VIC Hotel offering shared accommodation

Hours of operation: The number of hours when the occupancy of the building is greater than 20% of the peak occupancy.

House energy rating software: For the purposes of—

(a) Volume One, software accredited under the Nationwide House Energy Rating Scheme (NatHERS); or

(b) Volume Two—

(i) applied to H6V2—software accredited or previously accredited under the Nationwide House Energy Rating Scheme (NatHERS) and the additional functionality provided in non-regulatory mode; and

(ii) applied to Specification 42—software accredited under the Nationwide House Energy Rating Scheme (NatHERS).

Explanatory Information

The Nationwide House Energy Rating Scheme (NatHERS) refers to the Australian Governments' scheme that facilitates consistent energy ratings from software tools which are used to assess the potential thermal efficiency of dwelling envelopes.

Illuminance: The luminous flux falling onto a unit area of surface.

Illumination power density: The total of the power that will be consumed by the lights in a space, including any lamps, ballasts, current regulators and control devices other than those that are plugged into socket outlets for intermittent use such as floor standing lamps, desk lamps or work station lamps, divided by the area of the space, and expressed in W/m^2.

Explanatory Information

Illumination power density relates to the power consumed by the lighting system and includes the light source or luminaire and any control device. The power for the lighting system is the illumination power load. This approach is more complicated than the *lamp power density* approach but provides more flexibility for a dwelling with sophisticated control systems.

The area of the space refers to the area the lights serve. This could be considered a single room, open plan space, verandah, balcony or the like, or the total area of all these spaces.

Inclined lift: A power-operated device for raising or lowering people within a carriage that has one or more rigid guides on an inclined plane.

Individual protection: The installation of a *backflow prevention device* at the point where a water service connects to a single fixture or appliance.

NSW Information and education facility

Insulation: In relation to an FRL, the ability to maintain a temperature on the surface not exposed to the furnace below the limits specified in AS 1530.4.

Integrity: In relation to an FRL, the ability to resist the passage of flames and hot gases specified in AS 1530.4.

Internal wall: For the purposes of—

(a) Volume One, excludes a *common wall* or a party wall; or

(b) Volume Two, excludes a *separating wall*, *common wall* or party wall.

Interstitial condensation: The *condensation* of moisture on surfaces between material layers inside the building component.

Irrigation system: An irrigation system of the following types:

(a) Type A— all permanently open outlets and piping more than 150 mm above finished surface level, not subject to ponding or *backpressure* and not involving injection systems.

(b) Type B— irrigation systems in domestic or residential buildings with piping or outlets installed less than 150 mm above finished surface level and not involving injection systems.

(c) Type C— irrigation systems in other than domestic or residential buildings with piping outlets less than 150 mm above finished surface level and not involving injection systems.

(d) Type D— irrigation systems where fertilizers, herbicides, nematicides or the like are injected or siphoned into the system.

JAS-ANZ: The Joint Accreditation System of Australia and New Zealand.

Lamp power density: The total of the maximum power rating of the lamps in a space, other than those that are plugged into socket outlets for intermittent use such as floor standing lamps, desk lamps or work station lamps, divided by the area of the space, and expressed in W/m^2.

Explanatory Information

Lamp power density is a simple means of setting energy consumption at an efficient level for Class 1 and associated Class 10a buildings.

Lamp refers to the globe or globes that are to be installed in a permanently wired light fitting. The maximum power of

a lamp is usually marked on the fitting as the maximum allowable wattage.

The area of the space refers to the area the lights serve. This could be considered a single room, open plan space, verandah, balcony or the like, or the total area of all these spaces.

Landing: An area at the top or bottom of a *flight* or between two *flights*.

Latent heat gain: The heat gained by the vapourising of liquid without change of temperature.

Lateral support: A support (including a footing, buttress, cross wall, beam, floor or braced roof structure) that effectively restrains a wall or pier at right angles to the face of the wall or pier.

Lead free: Where a plumbing product or material in contact with *drinking water* has a *weighted average* lead content of not more than 0.25%.

NSW Licensed premises

WA Licensed premises

Lightweight construction: Construction which incorporates or comprises—

(a) sheet or board material, plaster, render, sprayed application, or other material similarly susceptible to damage by impact, pressure or abrasion; or

(b) concrete and concrete products containing pumice, perlite, vermiculite, or other soft material similarly susceptible to damage by impact, pressure or abrasion; or

(c) masonry having a width of less than 70 mm.

Loadbearing: Intended to resist vertical forces additional to those due to its own weight.

Loadbearing wall: For the purposes of H1D4 and H2D3 of NCC Volume Two and Section 4 of the ABCB Housing Provisions, means any wall imposing on the footing a load greater than 10 kN/m.

Loss: Physical damage, financial loss or loss of *amenity*.

Low Hazard: Any condition, device or practice which, in connection with a water supply, would constitute a nuisance by colour, odour or taste but does not have the potential to injure or endanger health.

Low rainfall intensity area: An area with a 5 minute rainfall intensity for an *annual exceedance probability* of 5% of not more than 125 mm/hour.

Explanatory Information

Rainfall intensity figures can be obtained from Table 7.4.3d in the ABCB Housing Provisions.

Low-rise, low-speed constant pressure lift: A power-operated low-rise, low-speed device for raising or lowering people with limited mobility on a carriage that is controlled by the application of constant pressure to a control.

Low-rise platform lift: A power-operated device for raising or lowering people with limited mobility on a platform, that is controlled automatically or by the application of constant pressure to a control.

Low voltage: A *voltage* exceeding *extra-low voltage*, but not exceeding 1000 V AC or 1500 V DC.

Luminance contrast: The light reflected from one surface or component, compared to the light reflected from another surface or component.

Main water heater: The domestic hot water unit in a dwelling that is connected to at least one shower and the largest number of hot water outlets.

Main space conditioning: Either—

(a) the heating or cooling equipment that serves at least 70% of the *conditioned space* of a dwelling; or

(b) if no one heating or cooling equipment serves at least 70% of the *conditioned space* of the dwelling, the equipment that results in the highest net equivalent energy usage when calculated in accordance with J3D14(1)(a) of NCC Volume One or 13.6.2(1)(a) of the ABCB Housing Provisions.

Notes

(1) If a multi-split *air-conditioning* unit is installed, it is considered to be a single heating or cooling *service*.

(2) A series of separate heaters or coolers of the one type can be considered a single heater or cooler type with a performance level of that of the unit with the lowest efficiency.

Explanatory Information

The purpose of defining for main space conditioning is to provide criteria upon which the heating or cooling equipment should be selected when showing compliance with J3D14(1)(a) of NCC Volume One and 13.6.2(1)(a) of the ABCB Housing Provisions when more than one type and efficiency of equipment is present. In J3D14(1)(a) the formula that determines E_R allows the selection of only one heating or cooling system. This definition requires that if any one system serves at least 70% of the *floor area* that is heated or cooled it should be used as the basis of determining E_R. If, however, no one system serves at least 70% of the *floor area*, then the appliance that results in the highest net equivalent energy usage, when calculated in accordance with J3D14(1)(a)/13.6.2(1)(a), should be selected.

Massive timber: An element not less than 75 mm thick as measured in each direction formed from solid and laminated timber.

Maximum retained water level: The point where surface water will start to overflow out of the *shower area*.

Medium Hazard: Any condition, device or practice which, in connection with a water supply, has the potential to injure or endanger health.

Membrane: A barrier impervious to moisture.

Explanatory Information

A barrier may be a single or multi-part system.

Mezzanine: An intermediate floor within a room.

Minimum Energy Performance Standards (MEPS): The Minimum Energy Performance Standards for equipment and appliances established through the Greenhouse and Energy Minimum Standards Act 2012.

NSW Minimum lateral clearance

Mixed construction: A building consisting of more than one form of construction, particularly in double-storey buildings.

Mould: A fungal growth that can be produced from conditions such as dampness, darkness, or poor ventilation.

NABERS Energy: The National Australian Built Environment Rating Systems for energy efficiency, which is managed by the New South Wales Government.

Network Utility Operator: A person who—

(a) undertakes the piped distribution of *drinking water* or *non-drinking water* for supply; or

(b) is the operator of a sewerage system or a stormwater *drainage* system.

Explanatory Information

A Network Utility Operator in most States and Territories is the water and sewerage authority licensed to supply water and receive sewage and/or stormwater. The authority operates or proposes to operate a network that undertakes the distribution of water for supply and undertakes to receive sewage and/or stormwater drainage. This authority may be a licensed utility, local government body or council.

Non-combustible: Applied to—

(a) a material — means not deemed *combustible* as determined by AS 1530.1 — Combustibility Tests for Materials; or

(b) construction or part of a building — means constructed wholly of materials that are not deemed *combustible*.

Non-drinking water: Water which is not intended primarily for human consumption.

Occupant traits: For the purposes of—

(a) Volume One, the features, needs and profile of the occupants in a *habitable room* or space; or

(b) Volume Two, the features, needs and profile of the occupants in a room or space.

Explanatory Information

For the purpose of Volume Two, this term is used to describe the characteristics of the occupants and their associated requirements in relation to a room or space.

For example, in relation to a bedroom, the following occupant characteristics and associated requirements should be

considered:

- Characteristics: height, mobility and how often the space will be used.
- Requirements: a sleeping space and a space to undertake leisure activities.

Occupiable outdoor area: A space on a roof, balcony or similar part of a building—

(a) that is open to the sky; and

(b) to which access is provided, other than access only for maintenance; and

(c) that is not *open space* or directly connected with *open space*.

VIC On-site wastewater management system

On-site wastewater management system: A system that receives and/or treats wastewater generated and discharges the resulting effluent to an *approved disposal system* or re-use system.

Open-deck carpark: A carpark in which all parts of the parking *storeys* are cross-ventilated by permanent unobstructed openings in not fewer than 2 opposite or approximately opposite sides, and—

(a) each side that provides ventilation is not less than $^{1}/_{6}$ of the area of any other side; and

(b) the openings are not less than ½ of the wall area of the side concerned.

Open space: A space on the allotment, or a roof or similar part of a building adequately protected from fire, open to the sky and connected directly with a public road.

Open spectator stand: A tiered stand substantially open at the front.

Other property: All or any of the following—

(a) any building on the same or an adjoining allotment; and

(b) any adjoining allotment; and

(c) a road.

Outdoor air: Air outside the building.

Outdoor air economy cycle: A mode of operation of an *air-conditioning* system that, when the *outdoor air* thermodynamic properties are favourable, increases the quantity of *outdoor air* used to condition the space.

Outfall: That part of the disposal system receiving *surface water* from the *drainage* system and may include a natural water course, kerb and channel, or soakage system.

Overflow device: A device that provides relief to a water service, sanitary *plumbing* and *drainage* system, *rainwater service* or stormwater system to avoid the likelihood of *uncontrolled discharge*.

Panel wall: A non-*loadbearing external wall*, in frame or similar construction, that is wholly supported at each *storey*.

Partially buried rainwater tank: A rainwater tank that is not completely covered by earth but is partially set into the ground.

Patient care area: A part of a *health-care building* normally used for the treatment, care, accommodation, recreation, dining and holding of patients including a *ward area* and *treatment area*.

Performance-based design brief (PBDB): The report that defines the scope of work for the performance-based analysis, the technical basis for analysis, and the criteria for acceptance of any relevant *Performance Solution* as agreed by stakeholders.

Performance Requirement: A requirement which states the level of performance which a *Performance Solution* or *Deemed-to-Satisfy Solution* must meet.

Performance Solution: A method of complying with the *Performance Requirements* other than by a *Deemed-to-Satisfy Solution*.

Perimeter of building: For the purposes of Section 8 of the Housing Provisions, means the external envelope of a building.

TAS Permit Authority

Personal care services: Any of the following:

(a) The provision of nursing care.

(b) Assistance or supervision in—

(i) bathing, showering or personal hygiene; or

(ii) toileting or continence management; or

(iii) dressing or undressing; or

(iv) consuming food.

(c) The provision of direct physical assistance to a person with mobility problems.

(d) The management of medication.

(e) The provision of substantial rehabilitative or development assistance.

Piping: For the purposes of Section J in Volume One or Part H6 in Volume Two, and Section 13 of the Housing Provisions, means an assembly of pipes, with or without valves or other fittings, connected together for the conveyance of liquids and gases.

NSW Planning for Bush Fire Protection

Pliable building membrane: A water barrier as classified by AS 4200.1.

VIC Plumbing

Plumbing: Any water service plumbing or sanitary plumbing system.

Plumbing or Drainage Solution: A solution which complies with the *Performance Requirement* and is a—

(a) *Performance Solution*; or

(b) *Deemed-to-Satisfy Solution*; or

(c) combination of (a) and (b).

Point of connection: Any of the following:

(a) For a cold water service, means the point where the cold water service connects to—

(i) the *Network Utility Operator's* water supply system; or

(ii) the point of isolation to an alternative water source where there is no *Network Utility Operator's* water supply available or is not utilised.

(b) For a *heated water* service, means the point where the water heater connects to the cold water service downstream of the isolation valve.

(c) For sanitary *drainage*, means the point where the on-site sanitary *drainage* system connects to—

(i) the *Network Utility Operator's* sewerage system; or

(ii) an *on-site wastewater management system*.

(d) For sanitary *plumbing*, means the point where the sanitary *plumbing* system connects to the sanitary *drainage* system.

(e) For a *rainwater service*, means the point where the *rainwater service*—

(i) connects to the point of isolation for the *rainwater storage*; or

(ii) draws water from the *rainwater storage*.

(f) For stormwater disposal, means the point where the on-site stormwater *drainage* system connects to—

(i) the *Network Utility Operator's* stormwater system; or

(ii) an approved on-site disposal system.

(g) For a fire-fighting water service, means the point where the service connects to—

(i) a cold water service, downstream of a *backflow prevention device*; or

(ii) the *Network Utility Operator's* water supply system; or

(iii) the point of isolation to an alternative water source.

Notes

A domestic fire sprinkler service conforming to FPAA101D is considered part of the cold water service.

Explanatory Information

The *point of connection* is usually determined by the *Network Utility Operator* according to the water and sewerage

Acts, Regulations and codes that apply within the *Network Utility Operator's* licensed area and/or jurisdiction.

WA Potable water

Predicted Mean Vote (PMV): The Predicted Mean Vote of the thermal perception of building occupants determined in accordance with ANSI/ASHRAE Standard 55.

Preformed shower base: A preformed, prefinished *vessel* installed as the finished floor of a shower compartment, and which is provided with a connection point to a sanitary *drainage* system.

Explanatory Information

Preformed shower bases are commonly made of plastics, composite materials, vitreous enamelled pressed steel, or stainless steel.

Pressure vessel: A vessel subject to internal or external pressure, including interconnected parts and components, valves, gauges and other fittings up to the first point of connection to connecting piping, and—

(a) includes fire heaters and gas cylinders; but

(b) excludes—

(i) any vessel that falls within the definition of a *boiler*; and

(ii) storage tanks and equipment tanks intended for storing liquids where the pressure at the top of the tank is not exceeding 1.4 kPa above or 0.06 kPa below atmospheric pressure; and

(iii) domestic-type hot water supply heaters and tanks; and

(iv) pressure vessels installed for the purposes of fire suppression or which serve a fire suppression system.

QLD Primary building element

Primary building element: For the purposes of—

(a) Volume One, a member of a building designed specifically to take part of the loads specified in B1D3 and includes roof, ceiling, floor, stairway or ramp and wall framing members including bracing members designed for the specific purpose of acting as a brace to those members; or

(b) Part 3.4 of the ABCB Housing Provisions, a member of a building designed specifically to take part of the building loads and includes roof, ceiling, floor, stairway or ramp and wall framing members including bracing members designed for the specific purpose of acting as a brace to those members.

Explanatory Information

The loads to which a building may be subjected are dead, live, wind, snow and earthquake loads. Further information on building loads can be found in the AS 1170 series of Standards.

Primary insulation layer: The most interior insulation layer of a wall or roof construction.

Private bushfire shelter: A structure associated with, but not attached to, or part of a Class 1a dwelling that may, as a last resort, provide shelter for occupants from immediate life threatening effects of a bushfire.

Private garage: For the purposes of—

(a) Volume One—

(i) any garage associated with a Class 1 building; or

(ii) any single *storey* of a building of another Class containing not more than 3 vehicle spaces, if there is only one such *storey* in the building; or

(iii) any separate single *storey* garage associated with another building where such garage contains not more than 3 vehicle spaces; or

(b) Volume Two—

(i) any garage associated with a Class 1 building; or

(ii) any separate single *storey* garage associated with another building where such garage contains not more than 3 vehicle spaces.

Product: *Plumbing* and *drainage* items within the scope of Volume Three including but not limited to—

(a) materials, fixtures and components used in a *plumbing* or *drainage* installation; and

(b) appliances and equipment connected to a *plumbing* or *drainage* system.

Product Technical Statement: A form of documentary evidence stating that the properties and performance of a building material, product or form of construction fulfil specific requirements of the NCC, and describes—

(a) the application and intended use of the building material, product or form of construction; and

(b) how the use of the building material, product or form of construction complies with the requirements of the NCC Volume One and Volume Two; and

(c) any limitations and conditions of the use of the building material, product or form of construction relevant to (b).

Professional engineer: A person who is—

(a) if legislation is applicable — a registered professional engineer in the relevant discipline who has appropriate experience and competence in the relevant field; or

(b) if legislation is not applicable—

(i) registered in the relevant discipline on the National Engineering Register (NER) of the Institution of Engineers Australia (which trades as 'Engineers Australia'); or

(ii) eligible to become registered on the Institution of Engineers Australia's NER and has appropriate experience and competence in the relevant field.

NSW Projection suite

TAS Public

WA Public building

Public corridor: An enclosed corridor, hallway or the like which—

(a) serves as a means of egress from 2 or more *sole-occupancy units* to a *required exit* from the *storey* concerned; or

(b) is *required* to be provided as a means of egress from any part of a *storey* to a *required exit*.

Rainwater service: A water service which distributes water from the isolation valve of the rainwater storage to the rainwater points of discharge for purposes such as for clothes washing, urinal and water closet flushing and external hose cocks.

Rainwater storage: Any storage of rainwater collected from a roof catchment area which is used to supply water for the primary purposes of drinking, personal hygiene or other uses.

Explanatory Information

Generally this applies to alternative water sources not supplied by a *Network Utility Operator*. This does not include *rainwater storage* for non-drinking purposes.

SA Rainwater tank

Rapid roller door: A door that opens and closes at a speed of not less than 0.5 m/s.

Recognised expert: A person with qualifications and experience in the area of *plumbing* or *drainage* in question recognised by the authority having jurisdiction.

Explanatory Information

A *recognised expert* is a person recognised by the authority having jurisdiction as qualified to provide evidence under A5G4(5). Generally, this means a hydraulic consultant or engineer, however the specific requirements are determined by the authority having jurisdiction.

Under A5G4(5), a report from a *recognised expert* may be used as evidence of suitability that a *product* listed on the *WaterMark Schedule of Excluded Products*, or a *plumbing* or *drainage* system, complies with a *Performance Requirement* or *Deemed-to-Satisfy Provisions*.

Reference building: For the purposes of—

(a) Volume One, a hypothetical building that is used to calculate the maximum allowable—

(i) *annual greenhouse gas emissions* for the common area of a Class 2 building or a Class 3 to 9 building; or

(ii) *heating load*, *cooling load* and *energy value* for a *sole-occupancy unit* of a Class 2 building or a Class 4 part of a building; or

(b) Volume Two, a hypothetical building that is used to determine the maximum allowable *heating load* and *cooling load* for the proposed building.

Reflective insulation: A building membrane with a reflective surface such as a reflective foil laminate, reflective barrier, foil batt or the like capable of reducing radiant heat flow.

Explanatory Information

For Volume Two:

- Typical *R-Values* achieved by adding *reflective insulation* are given in the explanatory information accompanying Section 13 of the ABCB Housing Provisions. Information on specific products may be obtained from *reflective insulation* manufacturers.
- The surface of *reflective insulation* may be described in terms of its emittance (or infra-red emittance) or in terms of its reflectance (or solar reflectance). Generally, for the surface of a particular *reflective insulation*: emittance + reflectance = 1.
- Some types of *reflective insulation* may also serve the purposes of waterproofing or vapour proofing.

Regulated energy: The energy consumed by a building's *services* minus the amount of *renewable energy* generated and used on *site*.

Reinforced masonry: Masonry reinforced with steel reinforcement that is placed in a bed joint or grouted into a core to strengthen the masonry.

Reliability: The probability that a system performs to a level consistent with the system specification.

Renewable energy: Energy that is derived from sources that are regenerated, replenished, or for all practical purposes cannot be depleted and the energy sources include, but are not limited to, solar, wind, hydroelectric, wave action and geothermal.

Required: Required to satisfy a *Performance Requirement* or a *Deemed-to-Satisfy Provision* of the NCC as appropriate.

Required safe egress time (RSET): The time required for safe evacuation of occupants to a place of safety prior to the onset of untenable conditions.

Residential aged care building: A Class 3 or 9a building whose residents, due to their incapacity associated with the ageing process, are provided with physical assistance in conducting their daily activities and to evacuate the building during an emergency.

Residential care building: A Class 3, 9a or 9c building which is a place of residence where 10% or more of persons who reside there need physical assistance in conducting their daily activities and to evacuate the building during an emergency (including any *aged care building* or *residential aged care building*) but does not include a hospital.

VIC Residential care building (Vic)

Resident use area: Part of a Class 9c building normally used by residents, and—

(a) includes *sole-occupancy units*, lounges, dining areas, activity rooms and the like; but

(b) excludes offices, storage areas, commercial kitchens, commercial laundries and other spaces not for the use of residents.

Resistance to the incipient spread of fire: In relation to a ceiling membrane, means the ability of the membrane to insulate the space between the ceiling and roof, or ceiling and floor above, so as to limit the temperature rise of materials in this space to a level which will not permit the rapid and general spread of fire throughout the space.

Explanatory Information

Resistance to the incipient spread of fire refers to the ability of a ceiling to prevent the spread of fire and thermally insulate the space between the ceiling and the roof or floor above. "Resistance to the incipient spread of fire" is superior to "fire-resistance" because it requires a higher standard of heat insulation.

The definition is used in Volume Two for separating floors/ceilings for a Class 1a dwelling located above a non-appurtenant *private garage*.

Rise in storeys: The greatest number of *storeys* calculated in accordance with C2D3 of Volume One.

Riser: The height between consecutive treads and between each *landing* and continuous tread.

VIC Restricted children's service

Rolled fill: Material placed in layers and compacted by repeated rolling by an excavator.

SA Roof catchment area

Roof light: For the purposes of Section J and Part F6 in NCC Volume One, Part H6 in NCC Volume Two, and Part 10.5 and Section 13 of the ABCB Housing Provisions, a skylight, *window* or the like installed in a roof—

(a) to permit natural light to enter the room below; and

(b) at an angle between 0 and 70 degrees measured from the horizontal plane.

NSW Row

R-Value: The thermal resistance of a component calculated by dividing its thickness by its thermal conductivity, expressed in m^2.K/W.

Safe place: Either—

(a) a place of safety within a building—

(i) which is not under threat from a fire; and

(ii) from which people must be able to safely disperse after escaping the effects of an emergency to a road or *open space*; or

(b) a road or *open space*.

Sanitary compartment: A room or space containing a closet pan or urinal (see Figures 6a and 6b).

Figure 6a: Identification of a sanitary compartment (diagram a)

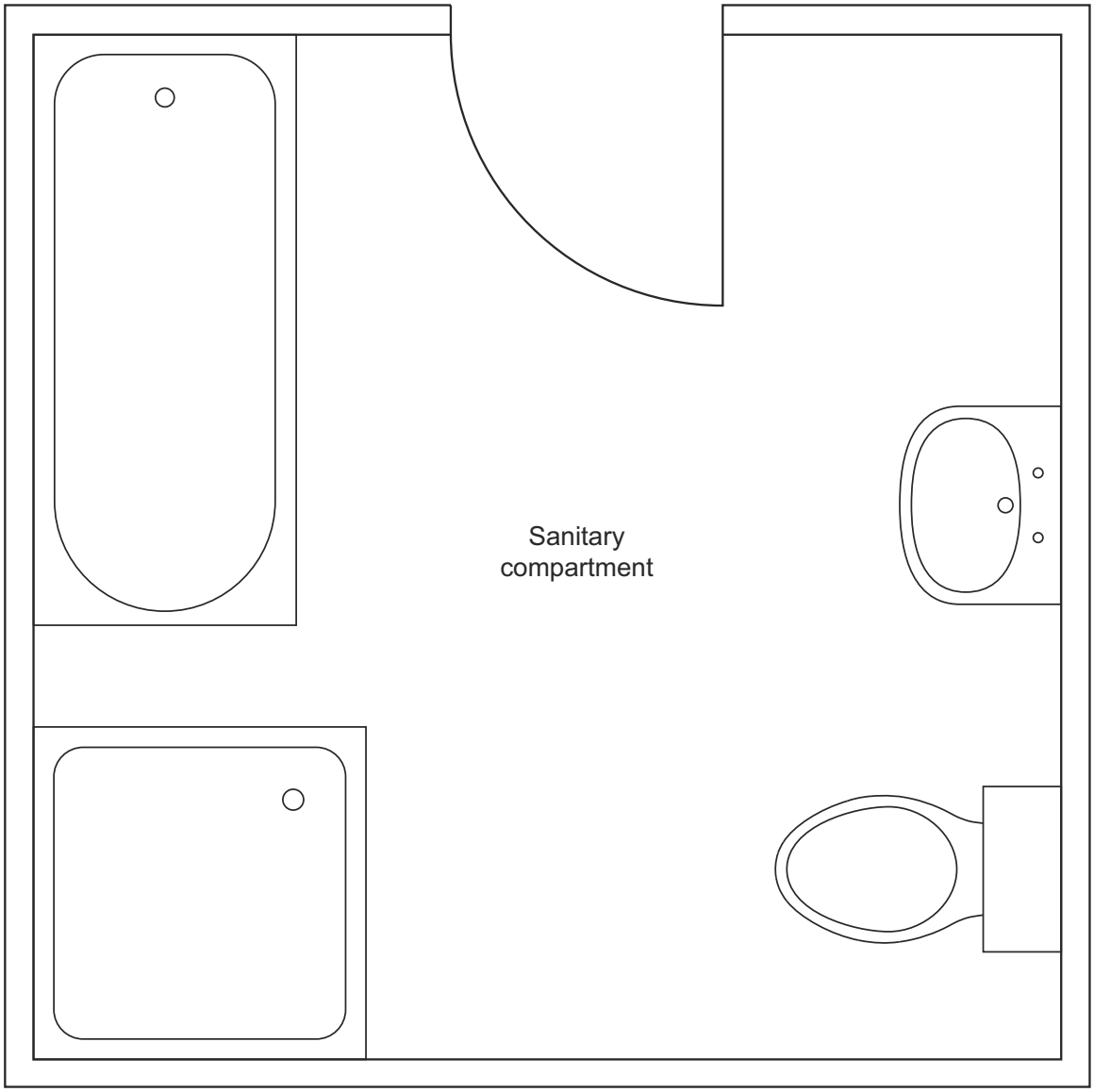

Figure 6b: Identification of a sanitary compartment (diagram b)

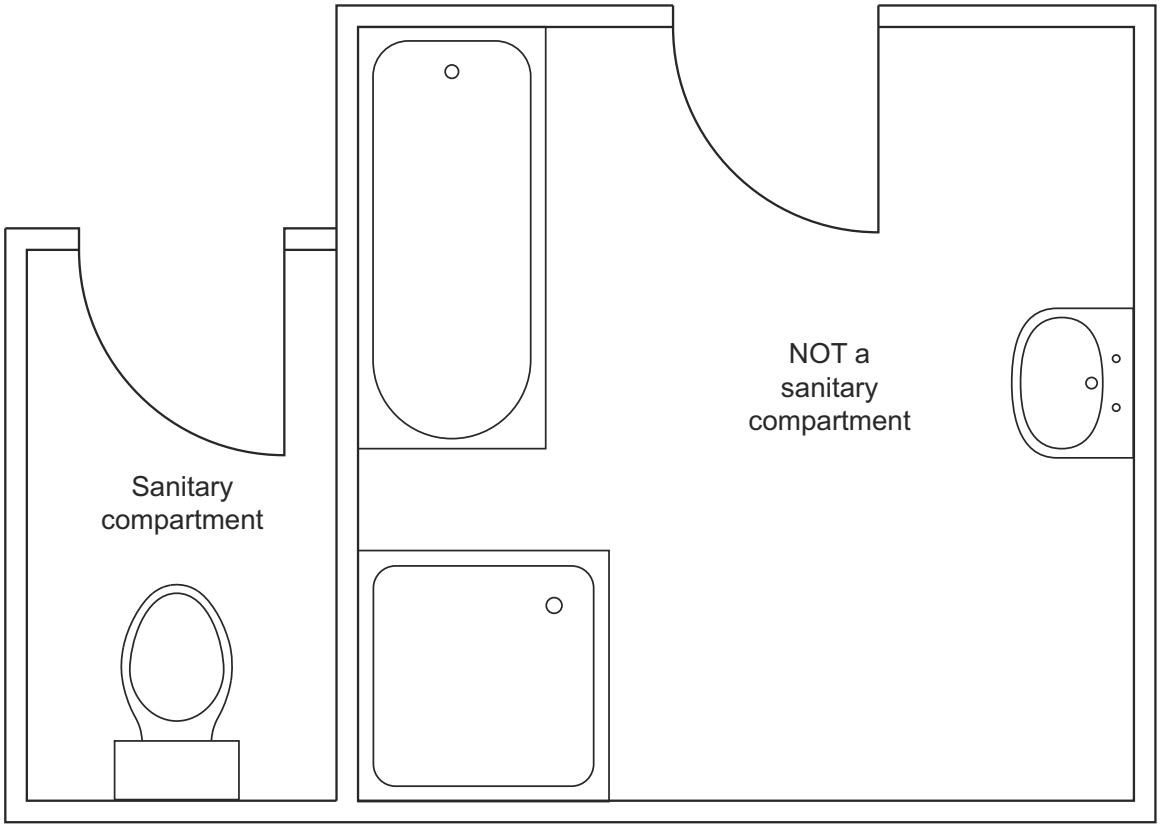

Sarking-type material: A material such as a *reflective insulation* or other flexible membrane of a type normally used for a purpose such as waterproofing, vapour management or thermal reflectance.

School: Includes a primary or secondary school, college, university or similar educational establishment.

TAS School age care facility

Screed: A layer of material (usually cement based) which sets in situ between a structural base and the finished floor material.

Self-closing: For the purposes of—

(a) Volume One, applied to a door, means equipped with a device which returns the door to the fully closed position immediately after each opening; or

(b) Volume Two, applied to a door or *window*, means equipped with a device which returns the door or *window* to the fully closed and latched position immediately after each manual opening.

Sensible heat gain: The heat gained which causes a change in temperature.

Separating element: A barrier that exhibits fire *integrity*, *structural adequacy*, *insulation*, or a combination of these for a period of time under specified conditions (often in accordance with AS 1530.4).

Separating wall: A wall that is common to adjoining Class 1 buildings (see Figure 7).

Figure 7: Separating wall

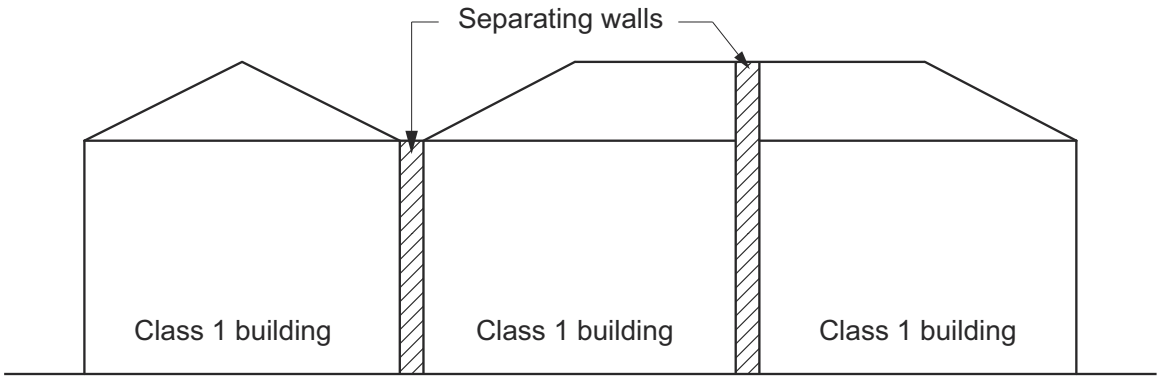

Elevation

Figure Notes

In Volume Two a separating wall may also be known as a party wall and typically is *required* to be *fire-resisting* construction (see ABCB Housing Provisions Parts 9.2 and 9.3).

Service: For the purposes of Section J in Volume One, means a mechanical or electrical system that uses energy to provide *air-conditioning*, mechanical ventilation, heated water supply, artificial lighting, vertical transport and the like within a building, but which does not include—

(a) systems used solely for emergency purposes; and

(b) cooking facilities; and

(c) portable appliances.

Service station: A garage which is not a *private garage* and is for the servicing of vehicles, other than only washing, cleaning or polishing.

Shaft: The walls and other parts of a building bounding—

(a) a well, other than an *atrium well*; or

(b) a vertical chute, duct or similar passage, but not a chimney or flue.

VIC Shared accommodation building

Shower area: The area affected by water from a shower, including a shower over a bath and for a shower area that is—

(a) Enclosed – the area enclosed by walls or screens including hinged or sliding doors that contain the spread of water to within that space; or

(b) Unenclosed – the area where, under normal use, water from the shower rose is not contained within the shower area.

Shower screen: The panels, doors or windows enclosing or partially enclosing a *shower area*.

Single leaf masonry: Outer walls constructed with a single thickness of masonry unit.

Site: The part of the allotment of land on which a building stands or is to be erected.

Sitework: Work on or around a *site*, including earthworks, preparatory to or associated with the construction, *alteration*, demolition or removal of a building.

NSW Small live music or arts venue

SA Small arts venue

Small-scale Technology Certificate: A certificate issued under the Commonwealth Government's Small-scale Renewable Energy Scheme.

Small-sized, low-speed automatic lift: A restricted use power-operated device for the infrequent raising or lowering of people with limited mobility on a platform that is controlled automatically but has the capability of being electrically isolated by a key-lockable control.

Smoke-and-heat vent: A vent, located in or near the roof for smoke and hot gases to escape if there is a fire in the building.

Smoke-Developed Index: The index number for smoke as determined by AS/NZS 1530.3.

Smoke development rate: The development rate for smoke as determined by testing flooring materials in accordance with AS ISO 9239.1.

Smoke growth rate index ($SMOGRA_{RC}$): The index number for smoke used in the regulation of *fire hazard properties* and applied to materials used as a finish, surface, lining or attachment to a wall or ceiling.

Solar admittance: The fraction of incident irradiance on a *wall-glazing construction* that adds heat to a building's space.

Sole-occupancy unit: A room or other part of a building for occupation by one or joint owner, lessee, tenant, or other occupier to the exclusion of any other owner, lessee, tenant, or other occupier and includes—

(a) a dwelling; or

(b) a room or suite of rooms in a Class 3 building which includes sleeping facilities; or

(c) a room or suite of associated rooms in a Class 5, 6, 7, 8 or 9 building; or

(d) a room or suite of associated rooms in a Class 9c building, which includes sleeping facilities and any area for the exclusive use of a resident.

NSW Spa pool

Spandrel panel: For the purposes of Section J, means the opaque part of a façade in curtain wall construction which is commonly adjacent to, and integrated with, *glazing*.

NSW Special fire protection purpose

Spiral stairway: A stairway with a circular plan, winding around a central post with steps that radiate from a common centre or several radii (see Figures 11.2.2d and 11.2.2e in the ABCB Housing Provisions).

Spread-of-Flame Index: The index number for spread of flame as determined by AS/NZS 1530.3.

Sprinkler alarm switch: For the purposes of Specification 23, a device capable of sending an electrical signal to activate an alarm when a residential sprinkler head is activated (e.g. a flow switch).

Stack bonded pier: A pier where the overlap of a masonry unit is not more than 25% of the length of the masonry unit below.

Stage: A floor or platform in a Class 9b building on which performances are presented before an audience.

Stairway platform lift: A power-operated device for raising or lowering people with limited mobility on a platform (with or without a chair) in the direction of a stairway.

Standard Fire Test: The Fire-resistance Tests of Elements of Building Construction as described in AS 1530.4.

SA Storage shed

Storey: A space within a building which is situated between one floor level and the floor level next above, or if there is no floor above, the ceiling or roof above, but not—

(a) a space that contains only—

(i) a lift *shaft*, stairway or meter room; or

(ii) a bathroom, shower room, laundry, water closet, or other *sanitary compartment*; or

(iii) accommodation intended for not more than 3 vehicles; or

(iv) a combination of the above; or

(b) a *mezzanine*.

Structural adequacy: In relation to an FRL, means the ability to maintain stability and adequate *loadbearing* capacity as determined by AS 1530.4.

Structural member: A component or part of an assembly which provides vertical or lateral support to a building or structure.

Surface water: All naturally occurring water, other than sub-surface water, which results from rainfall on or around the *site* or water flowing onto the *site*.

Swimming pool: Any excavation or structure containing water and principally used, or that is designed, manufactured or adapted to be principally used for swimming, wading, paddling, or the like, including a bathing or wading pool, or spa.

Tapered tread: A stair tread with a walking area that grows smaller towards one end.

NSW Temporary structure

TAS Temporary structure

Thermal comfort level: The level of thermal comfort in a building expressed as a *PMV* sensation scale.

Thermal energy load: The sum of the *heating load* and the *cooling load*.

Total R-Value: The sum of the *R-Values* of the individual component layers in a composite element including any building material, insulating material, airspace, thermal bridging and associated surface resistances, expressed in m^2.K/W.

Total System Solar Heat Gain Coefficient (SHGC): For the purposes of—

(a) Volume One, the fraction of incident irradiance on a *wall-glazing construction* or a *roof light* that adds heat to a building's space; or

(b) Volume Two, the fraction of incident irradiance on *glazing* or a *roof light* that adds heat to a building's space.

Total System U-Value: The thermal transmittance of the composite element allowing for the effect of any airspaces, thermal bridging and associated surface resistances, expressed in $Wm^{-2}K^{-1}$.

Treatment area: An area within a *patient care area* such as an operating theatre and rooms used for recovery, minor procedures, resuscitation, intensive care and coronary care from which a patient may not be readily moved.

Uncontrolled discharge: Any unintentional release of fluid from a *plumbing* and *drainage* system and includes leakage and seepage.

Unique wall: For the purposes of F3V1 in Volume One and H2V1 in Volume Two, a wall which is neither a *cavity wall* nor a *direct fix cladding wall*.

Unobstructed opening: For the purposes of Section 8 of the ABCB Housing Provisions, a glazed area that a person could mistake for an open doorway or clearway and walk into the glazed panel.

Unprotected water service: Unprotected water service means that the water service may be contaminated from a surrounding hazard.

Unreinforced masonry: Masonry that is not reinforced.

Vapour permeance: The degree that water vapour is able to diffuse through a material, measured in µg/N.s and tested in accordance with the ASTM-E96 Procedure B – Water Method at 23°C 50% relative humidity.

Vapour pressure: The pressure at which water vapour is in thermodynamic equilibrium with its condensed state.

Ventilation opening: An opening in the *external wall*, floor or roof of a building designed to allow air movement into or out of the building by natural means including a permanent opening, an openable part of a *window*, a door or other device which can be held open.

Verification Method: A test, inspection, calculation or other method that determines whether a *Performance Solution* complies with the relevant *Performance Requirements*.

Vessel: For the purposes of Volume One and Part 10.2 of the ABCB Housing Provisions, an open, pre-formed, pre-finished concave receptacle capable of holding water, usually for the purpose of washing, including a basin, sink, bath, laundry tub and the like.

Visibility: The maximum distance at which an object of defined size, brightness and contrast can be seen and recognised.

Voltage: A difference of potential, measured in Volts (V) and includes *extra-low voltage* and *low voltage*.

Volume: In relation to—

(a) a building — the volume of the total space of the building measured above the lowest floor (including, for a suspended floor, any subfloor space), over the enclosing walls, and to the underside of the roof covering; or

(b) a *fire compartment* — the volume of the total space of the *fire compartment* measured within the inner finished surfaces of the enclosing *fire-resisting* walls and/or floors, and—

(i) if there is no *fire-resisting* floor at the base of the *fire compartment*, measured above the finished surface of the lowest floor in the *fire compartment*; and

(ii) if there is no *fire-resisting* floor at the top of the *fire compartment*, measured to the underside of the roof covering of the *fire compartment*; and

(iii) if there is no *fire-resisting* wall, measured over the enclosing wall and if there is no enclosing wall, includes any space within the *fire compartment* that has a use which contributes to the *fire load*; or

(c) an *atrium* — the volume of the total space of the *atrium* measured within the finished surfaces of the bounding construction and if there is no bounding construction, within the *external walls*.

Waffle raft: A stiffened raft with closely spaced ribs constructed on the ground and with slab panels supported between ribs.

Wall-glazing construction: For the purposes of Section J in Volume One, the combination of wall and *glazing* components comprising the *envelope* of a building, excluding—

(a) *display glazing*; and

(b) opaque non-glazed openings such as doors, vents, penetrations and shutters.

Ward area: That part of a *patient care area* for resident patients and may contain areas for accommodation, sleeping, associated living and nursing facilities.

Water control layer: A *pliable building membrane* or the exterior cladding when no *pliable building membrane* is present.

WaterMark Certification Scheme: The ABCB scheme for certifying and authorising *plumbing* and *drainage products*.

WaterMark Conformity Assessment Body (WMCAB): A conformity assessment body registered with and accredited by the *JAS-ANZ* to conduct evaluations leading to *product* certification and contracted with the *administering body* to issue the *WaterMark Licence*.

WaterMark Licence: A licence issued by a *WaterMark Conformity Assessment Body*.

WaterMark Schedule of Excluded Products: The list maintained by the *administering body* of *products* excluded from the *WaterMark Certification Scheme*.

WaterMark Schedule of Products: The list maintained by the *administering body* of *products* included in the *WaterMark Certification Scheme*, and the specifications to which the *products* can be certified.

Explanatory Information

The *WaterMark Schedule of Products* and the *WaterMark Schedule of Excluded Products* can be viewed on the ABCB website at www.abcb.gov.au.

Waterproof: The property of a material that does not allow water to penetrate through it.

Waterproofing system: A combination of elements that are *required* to achieve a *waterproof* barrier as *required* by H4D2 and H4D3 including substrate, *membrane*, bond breakers, sealants, finishes and the like.

Water resistant: The property of a system or material that restricts water movement and will not degrade under conditions of water.

Water sensitive materials: Materials that have an inherent capacity to absorb water vapour and include timber, plasterboard, plywood, oriented strand board and the like.

Waterstop: A vertical extension of the *waterproofing system* forming a barrier to prevent the passage of water in a floor or other horizontal surfaces.

Watertight: Will not allow water to pass from the inside to the outside of the component or joint and vice versa.

Weighted average: Is calculated across the *wetted surface area* of a pipe, pipe fitting or plumbing fixture.

WA WELS

Wet area: An area within a building supplied with water from a water supply system, which includes bathrooms, showers, laundries and *sanitary compartments* and excludes kitchens, bar areas, kitchenettes or domestic food and beverage preparation areas.

Wetted surface area: Is calculated by the total sum of diameter (D) in contact with *drinking water*.

Winders: Treads within a straight *flight* that are used to change direction of the stair (see Explanatory Figure 1).

Window: Includes a *roof light*, glass panel, glass block or brick, glass louvre, glazed sash, glazed door, or other device which transmits natural light directly from outside a building to the room concerned when in the closed position.

Yield: The mass of a combustion product generated during combustion divided by the mass loss of the test specimen as specified in the *design fire*.

Zone protection: The installation of a *backflow prevention device* at the point where a water service is connected to multiple fixtures or appliances, with no *backflow prevention device* installed as *individual protection* downstream of this point.

Schedule 2 Referenced documents

Referenced documents

Referenced documents

The Standards and other documents listed in this Schedule are referenced in the NCC.

Table 1: Schedule of referenced documents

No.	Date	Title	Volume One	Volume Two	Housing Provisions	Volume Three
AS/NZS ISO 717 Part 1	2004	Acoustics — Rating of sound insulation in buildings and of building elements — Airborne sound insulation. (See Note 1)	F7V1, F7V2, F7V3, F7V4, F7D3	H4V4	10.7.2	N/A
AS ISO 717 Part 2	2004	Acoustics — Rating of sound insulation in buildings and of building elements — Impact sound insulation	F7V1, F7V3, F7D4	N/A	N/A	N/A
AS 1056 Part 1	1991	Storage water heaters — General requirements (incorporating amendments 1, 2, 3, 4 and 5)	N/A	N/A	N/A	B2D2
AS/NZS 1170 Part 0	2002	Structural design actions — General principles (incorporating amendments 1, 3 and 4)	B1V1, B1D2, Spec 4	H1V1, H1D7	2.2.2	N/A
AS/NZS 1170 Part 1	2002	Structural design actions — Permanent, imposed and other actions (incorporating amendments 1 and 2)	B1D3	N/A	2.2.3, 2.2.4, 8.3.1, 11.2.2, 11.2.3, 11.3.4	N/A
AS/NZS 1170 Part 2	2021	Structural design actions — Wind actions	B1D3, B1D4, Spec 4, F3V1, Schedule 1	H1D7, H2V1, Schedule 1	2.2.3, Schedule 1	Schedule 1
AS/NZS 1170 Part 3	2003	Structural design actions — Snow and ice actions (incorporating amendments 1 and 2)	B1D3	N/A	2.2.3	
AS 1170 Part 4	2007	Structural design actions — Earthquake actions in Australia (incorporating amendments 1 and 2)	B1D3	H1D4, H1D5, H1D6, H1D9	2.2.3	N/A
AS 1191	2002	Acoustics — Method for laboratory measurement of airborne sound transmission insulation of building elements	Spec 29	N/A	N/A	N/A
AS 1273	1991	Unplasticized PVC (UPVC) downpipe and fittings for rainwater	N/A	N/A	7.4.2	N/A
AS 1288	2021	Glass in buildings — Selection and installation	B1D4, Spec 11, Spec 12	H1D8	8.3.1	N/A
AS 1289.6.3.3	1997	Methods of testing soils for engineering purposes — Method 6.3.3: Soil strength and consolidation tests — Determination of the penetration resistance of a soil — Perth sand penetrometer test (incorporating amendment 1)	N/A	N/A	4.2.4	N/A

No.	Date	Title	Volume One	Volume Two	Housing Provisions	Volume Three
AS 1397	2021	Continuous hot-dip metallic coated steel sheet and strip — Coatings of zinc and zinc alloyed with aluminium and magnesium (See Note 10)	N/A	N/A	7.2.2	N/A
AS 1428 Part 1	2009	Design for access and mobility — General requirements for access — New building work (incorporating amendments 1 and 2)	D3D11, D3D16, D3D22, D4D2, D4D3, D4D4, D4D7, D4D10, D4D11, D4D13, Spec 16, E3D10, F4D5, G4D5, Schedule 1	Schedule 1	Schedule 1	Schedule 1, E1D2
AS 1428 Part 1	2001	Design for access and mobility — General requirements for access — New building work	I2D7, I2D8, I2D10, I2D15	N/A	N/A	E1D2
AS 1428 Part 1 (Supplement 1)	1993	Design for access and mobility — General requirements for access — Buildings — Commentary	I2D2	N/A	N/A	N/A
AS 1428 Part 2	1992	Design for access and mobility — Enhanced and additional requirements — Buildings and facilities	I2D2, I2D3, I2D4, I2D5, I2D7, I2D10, I2D11, I2D12, I2D13, I2D14	N/A	N/A	E1D2
AS 1428 Part 4	1992	Design for access and mobility — Tactile ground surface indicators for the orientation of people with vision impairment	I2D11	N/A	N/A	N/A
AS/NZS 1428 Part 4.1	2009	Design for access and mobility — Means to assist the orientation of people with vision impairment — Tactile ground surface indicators (incorporating amendments 1 and 2)	D4D9	N/A	N/A	N/A
AS 1530 Part 1	1994	Methods for fire tests on building materials, components and structures — Combustibility test for materials	Schedule 1	Schedule 1	Schedule 1	Schedule 1
AS 1530 Part 2	1993	Methods for fire tests on building materials, components and structures — Test for flammability of materials (incorporating amendment 1)	Schedule 1	Schedule 1	Schedule 1	Schedule 1

No.	Date	Title	Volume One	Volume Two	Housing Provisions	Volume Three
AS/NZS 1530 Part 3	1999	Methods for fire tests on building materials, components and structures — Simultaneous determination of ignitability, flame propagation, heat release and smoke release	Schedule 1, Spec 3	Schedule 1, Spec 3	Schedule 1	Schedule 1, Spec 3
AS 1530 Part 4	2014	Methods for fire tests on building materials, components and structures — Fire resistance tests for elements of construction	C4D15, C4D16, Spec 9, Spec 10, Spec 13, Spec 14, Schedule 1, Spec 3	9.3.2, Schedule 1, Spec 3	Schedule 1	Schedule 1, Spec 3
AS 1530 Part 8.1	2018	Methods for fire tests on building materials, components and structures — Tests on elements of construction for buildings exposed to simulated bushfire attack — Radiant heat and small flaming sources	Spec 43	N/A	N/A	N/A
AS/NZS 1546 Part 1	2008	On-site domestic wastewater treatment units - Septic tanks	N/A	N/A	N/A	C3D2
AS/NZS 1546 Part 2	2008	On-site domestic wastewater treatment units - Waterless composting toilets	N/A	N/A	N/A	C3D3
AS 1546 Part 3	2017	On-site domestic wastewater treatment units - Secondary treatment systems (incorporating amendment 1)	N/A	N/A	N/A	C3D4
AS 1546 Part 4	2016	On-site domestic wastewater treatment units - Domestic greywater treatment systems	N/A	N/A	N/A	C3D5
AS/NZS 1547	2012	On-site domestic wastewater management	N/A	N/A	N/A	C3D6
AS 1562 Part 1	2018	Design and installation of sheet roof and wall cladding — Metal (See Note 2)	B1D4, F3D2, F3D5	H1D7	N/A	N/A
AS1562 Part 3	2006	Design and installation of sheet roof and wall cladding — Plastic	B1D4, F3D2	H1D7	N/A	N/A
AS 1657	2018	Fixed platforms, walkways, stairways and ladders — Design, construction and installation	D2D21, D2D22, D3D23, I1D6, I3D5	N/A	N/A	N/A
AS/NZS 1664 Part 1	1997	Aluminium structures — Limit state design (incorporating amendment 1)	B1D4	N/A	2.2.4	N/A
AS/NZS 1664 Part 2	1997	Aluminium structures — Allowable stress design (incorporating amendment 1)	B1D4	N/A	2.2.4	N/A

No.	Date	Title	Volume One	Volume Two	Housing Provisions	Volume Three
AS 1668 Part 1	2015	The use of ventilation and air conditioning in buildings — Fire and smoke control in buildings (incorporating amendment 1)	C3D13, C4D15, Spec 11, D2D12, Spec 19, E2D3, E2D4, E2D6, E2D7, E2D8, E2D9, E2D11, E2D12, E2D13, E2D16, E2D17, E2D19, F6D12, Spec 21, Spec 31	N/A	N/A	N/A
AS 1668 Part 2	2012	The use of ventilation and air conditioning in buildings — Mechanical ventilation in buildings (incorporating amendments 1 and 2)	E2D12, F6V1, F6D6, F6D11, F6D12, F8D4, J6D4	H4V3, H4D7	10.8.2	N/A
AS 1668 Part 4	2012	The use of ventilation and air conditioning in buildings — Natural ventilation of buildings	F6D11	N/A	N/A	N/A
AS 1670 Part 1	2018	Fire detection, warning, control and intercom systems — System design, installation and commissioning — Fire (incorporating amendment 1) (See Note 3)	C4D6, C4D7, C4D8, C4D9, C4D12, D3D26, E2D3, E2D10, G4D7, Spec 12, Spec 20, Spec 23, Spec 31	N/A	9.5.1	N/A
AS 1670 Part 3	2018	Fire detection, warning, control and intercom systems — System design, installation and commissioning — Fire alarm monitoring (incorporating amendment 1) (See Note 3)	Spec 20, Spec 23	N/A	N/A	N/A
AS 1670 Part 4	2018	Fire detection, warning, control and intercom systems — System design, installation and commissioning — Emergency warning and intercom systems (incorporating amendment 1) (See Note 3)	E3V2, E4D9, Spec 31	N/A	N/A	N/A
AS/NZS 1680 Part 0	2009	Interior lighting — Safe movement	F6D5	N/A	10.5.2	N/A
AS 1684 Part 2	2021	Residential timber-framed construction — Non-cyclonic areas	B1D4, B1D5, F1D8	H1D6	2.2.5, 4.2.13, 5.6.6, 6.2.1, 6.3.6, 7.5.2, 7.5.3, 7.5.4, 10.2.19, 10.2.20	N/A

No.	Date	Title	Volume One	Volume Two	Housing Provisions	Volume Three
AS 1684 Part 3	2021	Residential timber-framed construction — Cyclonic areas	B1D4, B1D5, F1D8	H1D6	2.2.5, 4.2.13, 5.6.6, 6.2.1, 6.3.6, 7.5.2, 7.5.3, 7.5.4, 10.2.19, 10.2.20	N/A
AS 1684 Part 4	2010	Residential timber-framed construction — Simplified — Non-cyclonic areas (incorporating amendment 1)	B1D4, B1D5, F1D8	H1D6	2.2.5, 4.2.13, 5.6.6, 6.2.1, 7.5.2, 7.5.3, 7.5.4, 10.2.19, 10.2.20	N/A
AS 1720 Part 1	2010	Timber structures — Design methods (incorporating amendments 1, 2 and 3)	B1V1, B1D4	H1V1, H1D6	4.2.13, 5.3.3	N/A
AS/NZS 1720 Part 4	2019	Timber structures — Fire resistance of timber elements	Spec 1	Spec 1	N/A	Spec 1
AS 1720 Part 5	2015	Timber structures — Nailplated timber roof trusses (incorporating amendment 1)	B1D4	H1D6	N/A	N/A
AS 1735 Part 11	1986	Lifts, escalators and moving walks — Fire rated landing doors	C4D11	N/A	N/A	N/A
AS 1735 Part 12	1999	Lifts, escalators and moving walks — Facilities for persons with disabilities (incorporating amendment 1)	E3D8, I2D6	N/A	N/A	N/A
AS/NZS 1859 Part 4	2018	Reconstituted wood based panels — Specifications — Wet process fibreboard	N/A	N/A	7.5.3, 7.5.4	N/A
AS 1860 Part 2	2006	Particleboard flooring — Installation (incorporating amendment 1)	B1D4	H1D6	N/A	N/A
AS 1905 Part 1	2015	Components for the protection of openings in fire-resistant walls — Fire-resistant doorsets (incorporating amendment 1)	C4D7, Spec 12	N/A	N/A	N/A
AS 1905 Part 2	2005	Components for the protection of openings in fire-resistant walls — Fire-resistant roller shutters	Spec 12	N/A	N/A	N/A
AS 1926 Part 1	2012	Swimming pool safety — Safety barriers for swimming pools	G1D2, G1D4	H7D2	N/A	N/A
AS 1926 Part 2	2007	Swimming pool safety — Location of safety barriers for swimming pools (incorporating amendments 1 and 2)	G1D2	H7D2	N/A	N/A
AS 1926 Part 3	2010	Swimming pool safety — Water recirculation systems (incorporating amendment 1)	G1D2	H7D2	N/A	N/A

No.	Date	Title	Volume One	Volume Two	Housing Provisions	Volume Three
AS 2047	2014	Windows and external glazed doors in buildings (incorporating amendments 1 and 2) (See Note 4)	B1D4, F3V1, F3D4, J5D5	H1D8, H2V1	13.4.4	N/A
AS 2049	2002	Roof tiles (incorporating amendment 1)	F3D2	H1D7	N/A	N/A
AS 2050	2018	Installation of roof tiles	B1D4, F3D2	H1D7	7.3.2	N/A
AS 2118 Part 1	2017	Automatic fire sprinkler systems — General systems (incorporating amendments 1 and 2)	C1V3, Spec 17, Spec 18	N/A	N/A	N/A
AS 2118 Part 4	2012	Automatic fire sprinkler systems — Sprinkler protection for accommodation buildings not exceeding four storeys in height	Spec 17, Spec 18	N/A	N/A	B4D3
AS 2118 Part 5	2008 (R 2020)	Automatic fire sprinkler systems - Home fire sprinkler systems	N/A	N/A	N/A	B4D3
AS 2118 Part 6	2012	Automatic fire sprinkler systems — Combined sprinkler and hydrant systems in multistorey buildings	Spec 17	N/A	N/A	B4D3
AS 2159	2009	Piling — Design and installation (incorporating amendment 1)	B1D4	H1D12	N/A	N/A
AS/NZS 2179 Part 1	2014	Specifications for rainwater goods, accessories and fasteners — Metal shape or sheet rainwater goods, and metal accessories and fasteners	N/A	N/A	7.4.2	N/A
AS/NZS 2269 Part 0	2012	Plywood — Structural — Specifications (incorporating amendment 1)	N/A	N/A	7.5.4	N/A
AS/NZS 2293 Part 1	2018	Emergency lighting and exit signs for buildings — System design, installation and operation (incorporating amendment 1)	E4D4, E4D8, Spec 25, I3D15	N/A	N/A	N/A
AS 2312 Part 1	2014	Guide to the protection of structural steel against atmospheric corrosion by the use of protective coatings — Paint coatings	N/A	N/A	6.3.9	N/A
AS/NZS 2312 Part 2	2014	Guide to the protection of structural steel against atmospheric corrosion by the use of protective coatings — Hot dip galvanizing	N/A	N/A	6.3.9	N/A
AS/NZS 2327	2017	Composite structures — Composite steel-concrete construction in buildings (incorporating amendment 1)	B1D4, Spec 1	Spec 1	2.2.4	Spec 1

No.	Date	Title	Volume One	Volume Two	Housing Provisions	Volume Three
AS 2419 Part 1	2021	Fire hydrant installations — System design, installation and commissioning	C3D13, E1D2, Spec 18, I3D9	N/A	N/A	B4D4
AS 2441	2005	Installation of fire hose reels (incorporating amendment 1)	E1D3	N/A	N/A	B4D5
AS 2444	2001	Portable fire extinguishers and fire blankets — Selection and location	E1D14, I3D11	N/A	N/A	N/A
AS 2665	2001	Smoke/heat venting systems — Design, installation and commissioning	Spec 22, Spec 31	N/A	N/A	N/A
AS 2699 Part 1	2020	Built-in components for masonry construction — Wall ties (See Note 9)	C2D10	N/A	5.6.5	N/A
AS 2699 Part 3	2020	Built-in components for masonry construction — Lintels and shelf angles (durability requirements) (See Note 9)	C2D10	N/A	5.6.7	N/A
AS 2870	2011	Residential slabs and footings	F1D7	H1D4, H1D5	3.4.2, 4.2.2, 4.2.6, 4.2.8, 4.2.11, 4.2.14, 4.2.15, 10.2.9	N/A
AS/NZS 2890 Part 6	2009	Parking facilities — Offstreet parking for people with disabilities	D4D6	N/A	N/A	N/A
AS/NZS 2904	1995	Damp-proof courses and flashings (incorporating amendments 1 and 2)	F1D6	N/A	5.7.3, 7.5.6, 12.3.3	N/A
AS/NZS 2908 Part 1	2000	Cellulose-cement products — Corrugated sheets	B1D4	N/A	N/A	N/A
AS/NZS 2908 Part 2	2000	Cellulose-cement products — Flat sheets	Schedule 1	Schedule 1	7.5.3, 7.5.4, 7.5.5, 10.2.9,10.2.10, Schedule 1	Schedule 1
AS/NZS 2918	2018	Domestic solid fuel burning appliances — Installation (See Note 8)	G2D2	H7D5	12.4.4, 12.4.5	N/A
AS/NZS 3013	2005	Electrical installations — Classification of the fire and mechanical performance of wiring system elements	C3D14	N/A	N/A	N/A
AS/NZS 3500 Part 0	2021	Plumbing and drainage — Glossary of terms	A1G4	A1G4	N/A	A1G4
AS/NZS 3500 Part 1	2018	Plumbing and drainage — Water services	N/A	N/A	N/A	B5D6

No.	Date	Title	Volume One	Volume Two	Housing Provisions	Volume Three
AS/NZS 3500 Part 1	2021	Plumbing and drainage — Water services	N/A	N/A	N/A	B1D3, B1D5, B1D6, B3D3, B5V1, B5D2, B5D3, B5D4, Spec 41, B6D2, B6D3, B6D5, B7D3,
AS/NZS 3500 Part 2	2021	Plumbing and drainage — Sanitary plumbing and drainage (incorporating amendment 1)	N/A	N/A	N/A	C1D3, C1V1, C1V2, C1V3, C1V4, C1V5, C2V2, C2D3, C2D4, C3D7
AS/NZS 3500 Part 3	2021	Plumbing and drainage — Stormwater drainage (See Note 11)	F1D3	H2D2, H2D6	7.4.3	N/A
AS/NZS 3500 Part 4	2021	Plumbing and drainage — Heated water services (incorporating amendment 1)	N/A	N/A	N/A	B2D2, B2D6, B2D7, B2D8, B2D9, B2D11
AS 3600	2018	Concrete structures (incorporating amendments 1 and 2)	B1V1, B1D4, Spec 1	H1V1, H1D4, Spec 1	3.4.2, 4.2.6, 4.2.10, 4.2.13, 5.3.3, 10.2.9	Spec 1
AS 3660 Part 1	2014	Termite management — New building work (incorporating amendment 1)	B1D4, F1D6	N/A	3.4.1, 3.4.2	N/A
AS 3660 Part 3	2014	Termite management — Assessment criteria for termite management systems	N/A	N/A	3.4.2	N/A
AS/NZS 3666 Part 1	2011	Air-handling and water systems of buildings — Microbial control — Design, installation and commissioning	F4D10, F6D6	N/A	N/A	N/A
AS 3700	2018	Masonry structures	B1D4, F3D5, Spec 1, Spec 2	H1D5, H2D4, Spec 1, Spec 2	5.3.3, 5.4.2, 5.6.3, 6.3.6, 10.2.9, 10.2.19, 10.2.20, 12.4.3	Spec 1, Spec 2
AS 3740	2021	Waterproofing of domestic wet areas	F2D2	H4D2, H4D3	10.2.20	N/A
AS 3786	2014	Smoke alarms using scattered light, transmitted light or ionization (incorporating amendment 1 and 2) (See Note 5)	Spec 20	N/A	9.5.1	N/A
AS/NZS 3823 Part 1.2	2012	Performance of electrical appliances — Air conditioners and heat pumps — Ducted air conditioners and air-to-air heat pumps — Testing and rating for performance	Spec 33, J6D12	N/A	N/A	N/A

No.	Date	Title	Volume One	Volume Two	Housing Provisions	Volume Three
AS 3959	2018	Construction of buildings in bushfire-prone areas (incorporating amendments 1 and 2)	C2D14, F8D5, G5D2, G5D3, Spec 43	H7D4	10.8.3	B1D4, B2D10, B3D4, C1D4, C2D5
AS/NZS 4020	2018	Testing of products for use in contact with drinking water (See Note 6)	A5G4	A5G4	N/A	A5G4
AS 4055	2021	Wind loads for housing	Schedule 1	H1D6, H1D8, Schedule 1	2.2.3, Schedule 1	Schedule 1
AS 4072 Part 1	2005	Components for the protection of openings in fire-resistant separating elements — Service penetrations and control joints (incorporating amendment 1)	C4D15, C4D16	N/A	9.3.2	N/A
AS 4100	2020	Steel structures	B1D4, Spec 1	H1D6, Spec 1	4.2.13, 5.6.7	Spec 1
AS 4200 Part 1	2017	Pliable building membranes and underlays — Materials (incorporating amendment 1)	F3D3, F8D3, Spec 36, Schedule 1	Schedule 1	7.3.4, 7.5.2, 7.5.8, 10.8.1, Schedule 1	Schedule 1
AS 4200 Part 2	2017	Pliable building membranes and underlays — Installation requirements (incorporating amendments 1 and 2)	F3D3, F8D3	N/A	10.8.1	N/A
AS/NZS 4234	2021	Heated water systems — Calculation of energy consumption	Spec 45	N/A	N/A	B2D2
AS 4254 Part 1	2021	Ductwork for air-handling systems in buildings — Flexible duct	Spec 7, J6D7	H3D2	13.7.4	N/A
AS 4254 Part 2	2012	Ductwork for air-handling systems in buildings — Rigid duct	Spec 7, J6D5, J6D7	N/A	13.7.4	N/A
AS/NZS 4284	2008	Testing of building facades	F3V1	H2V1	N/A	N/A
AS/NZS 4505	2012	Garage doors and other large access doors (incorporating amendment 1)	B1D4	N/A	2.2.4	N/A
AS 4552	2005	Gas fired water heaters for hot water supply and/or central heating	N/A	N/A	N/A	B2D2
AS 4586	2013	Slip resistance classification of new pedestrian surface materials (incorporating amendment 1) (See Note 7)	D3D11, D3D14, D3D15. Spec 27	N/A	11.2.4	N/A
AS 4597	1999	Installation of roof slates and shingles (Non-interlocking type)	B1D4, F3D2	H1D7	N/A	N/A
AS/NZS 4600	2018	Cold-formed steel structures	B1D4, Spec 1	H1D6, Spec 1	5.3.3, 6.3.6	Spec 1

No.	Date	Title	Volume One	Volume Two	Housing Provisions	Volume Three
AS 4654 Part 1	2012	Waterproofing membranes for external above-ground use — Materials	F1D5	H2D8	N/A	N/A
AS 4654 Part 2	2012	Waterproofing membranes for external above-ground use — Design and installation	C2D14, F1D4, F1D5	H2D8	N/A	N/A
AS 4678	2002	Earth-retaining structures	N/A	H1D3	N/A	N/A
AS 4773 Part 1	2015	Masonry in small buildings — Design (incorporating amendment 1)	N/A	H1D5, H2D4	5.6.3, 12.4.3	N/A
AS 4773 Part 2	2015	Masonry in small buildings — Construction (incorporating amendment 1)	N/A	H1D5, H2D4	5.6.3, 12.4.3	N/A
AS/NZS 4859 Part 1	2018	Thermal insulation materials for buildings — General criteria and technical provisions	J4D3, J6D6, J6D9	N/A	13.2.2, 13.7.2, 13.7.4	N/A
AS/NZS 4859 Part 2	2018	Thermal insulation materials for buildings — Design	J3D8, J4D3, Spec 36, Spec 37	N/A	13.2.5, 13.2.6	N/A
AS/NZS 4858	2004	Wet area membranes	N/A	N/A	10.2.8	N/A
AS 5113	2016	Classification of external walls of buildings based on reaction-to-fire performance (incorporating amendment 1)	C1V3	N/A	N/A	N/A
AS 5146 Part 1	2015	Reinforced autoclaved aerated concrete — Structures (incorporating amendment 1)	B1D4	H1D7	N/A	N/A
AS 5146 Part 3	2018	Reinforced autoclaved aerated concrete — Construction	B1D4, F3D5	N/A	N/A	N/A
AS 5216	2021	Design of post-installed and cast-in fastenings in concrete	B1D4	N/A	2.2.4	N/A
AS/NZS 5601 Part 1	2013	Gas installations — General installations	J1V4	H6V3	N/A	N/A
AS 5637 Part 1	2015	Determination of fire hazard properties — Wall and ceiling linings	Spec 7, Schedule 1	Schedule 1	Schedule 1	Schedule 1
AS ISO 9239 Part 1	2003	Reaction to fire tests for floorings — Determination of the burning behaviour using a radiant heat source	Schedule 1	Schedule 1	Schedule 1	Schedule 1
AS/NZS ISO 9972	2015	Thermal performance of buildings — Determination of air permeability of buildings — Fan pressurization method	J1V4	H6V3	N/A	N/A
AIRAH-DA07	2021	Criteria for moisture control design analysis in buildings	F8V1	H4V5	N/A	N/A

No.	Date	Title	Volume One	Volume Two	Housing Provisions	Volume Three
AIRAH-DA09	1998	Air conditioning load estimation	Spec 35	N/A	N/A	N/A
AIRAH-DA28	2011	Building management and control systems	Spec 34	N/A	N/A	N/A
ANSI/ASHRAE Standard 55	2013	Thermal environmental conditions for human occupancy	Schedule 1	Schedule 1	Schedule 1	Schedule 1
ANSI/ASHRAE Standard 140	2007	Standard method of test for the evaluation of building energy analysis computer programs	J1V1, J1V2, J1V3, J1V5	H6V2	N/A	N/A
ASTM E2073-10	2010	Standard Test Method for Photopic Luminance of Photoluminescent (Phosphorescent) Markings	Spec 25	N/A	N/A	N/A
ASTM E72-15	2015	Standard Test Methods of Conducting Strength Tests of Panels for Building Construction	Spec 6	N/A	N/A	N/A
ASTM E695-03	2003	Standard Test Method of Measuring Relative Resistance of Wall, Floor and Roof Construction to Impact Loading	Spec 6	N/A	N/A	N/A
ASTM E96	2016	Standard Test Methods for Water Vapor Transmission of Materials	Schedule 1	Schedule 1	Schedule 1	Schedule 1
AHRI 460	2005	Performance rating of remote mechanical-draft air-cooled refrigerant condensers	J6D13	N/A	N/A	N/A
AHRI 551/591	2015	Performance rating of water-chilling and heat pump water-heating packages using the vapor compression cycle.	Spec 33, J6D11	N/A	N/A	N/A
ABCB	2022	Fire Safety Verification Method	C1V4	N/A	N/A	N/A
ABCB	2022	Housing Provisions Standard	N/A	Throughout	Throughout	N/A
ABCB	2022	Livable Housing Design	G7D2	H4D3, H8D2	3.3.3, 11.2.3	N/A
ABCB	2011	Protocol for Structural Software, Version 2011.2	B1D5	H1D6	2.2.5	N/A
ABCB	2012	Standard for Construction of Buildings in Flood Hazard Areas, Version 2012.3	B1D6	H1D10	N/A	N/A
ABCB	2022	Standard for NatHERS Heating and Cooling Load Limits, Version 2022.1	J3D3	Spec 42	N/A	N/A
ABCB	2022	Standard for Whole-of-Home Efficiency Factors	J3D14	N/A	13.6.2	N/A
CIBSE Guide A	2015	Environmental design	Spec 34, Spec 35, J4D3, J4D7	N/A	N/A	N/A

No.	Date	Title	Volume One	Volume Two	Housing Provisions	Volume Three
N/A	2002	Disability Standards for Accessible Public Transport	F4D12, I2D1	N/A	N/A	N/A
N/A	2010	Education and Care Services National Law Act (Vic)	Schedule 1	Schedule 1	Schedule 1	Schedule 1
European Union Commission Regulation 547/2012	2012	Eco-design requirements for water pumps	J6D8	N/A	N/A	N/A
European Union Commission Regulation 622/Annexx II, point 2	2012	Eco-design requirements for glandless standalone circulators and glandless circulators integrated in products	J6D8	N/A	N/A	N/A
FPAA101D	2021	Automatic Fire Sprinkler System Design and Installation — Drinking Water Supply	C1V3, C2D6, C2D13, C3D2, C3D7, C3D8, C4D6, C4D7, C4D8, C4D9, C4D12, Spec 5, Spec 7, D2D4, D2D17, D3D26, D3D30, E2D8, E2D9, E2D13, E2D14, E2D15, E2D16, E2D17, E2D19, E2D20, Spec 17, Spec 18, Spec 20, G3D1, G3D6, Spec 31, I1D2, Schedule 1	Schedule 1	Schedule 1	B4D3, Schedule 1, B1D5

No.	Date	Title	Volume One	Volume Two	Housing Provisions	Volume Three
FPAA101H	2018	Automatic Fire Sprinkler System Design and Installation — Hydrant Water Supply (incorporating amendment 1)	C1V3, C2D6, C2D13, C3D2, C3D7, C3D8, Spec 5, Spec 7, Spec 17, Spec 18, E2D8, E2D9, E2D13, E2D14, E2D15, E2D16, E2D17, E2D19, E2D20, Spec 20, G3D1, G3D6, Spec 31, I1D2	N/A	N/A	B4D3
ISO 140 Part 6	1998E	Acoustics — Measurement of sound insulation in buildings and of building elements — Laboratory measurements of impact sound insulation of floors	Spec 29	N/A	N/A	N/A
ISO 540	2008	Hard coal and coke — Determination of ash fusibility	Spec 13	N/A	N/A	N/A
ISO 8336	1993E	Fibre-cement flat sheets	Schedule 1	Schedule 1	7.5.3, 7.5.4, 7.5.5, Schedule 1	Schedule 1
ISO 25745 Part 2	2015	Energy performance of lifts, escalators and moving walks: Energy calculation and classification for lifts (elevators)	J7D8	N/A	N/A	N/A
NASH Standard	2021	Steel Framed Construction in Bushfire Areas	N/A	H7D4	N/A	N/A
NASH Standard Part 1	2005	Residential and Low Rise Steel Framing — Design Criteria (incorporating amendments A, B and C)	B1D4	H1D6	N/A	N/A
NASH Standard Part 2	2014	Residential and Low Rise Steel Framing — Design Solutions (incorporating amendment A)	B1D4, B1D5, F1D8	H1D6	2.2.5, 6.2.1, 6.3.6, 7.5.2, 7.5.3, 7.5.4, 10.2.19, 10.2.20	N/A
NSF/ ANSI/ CAN 372	2020	Drinking Water System Components - Lead Content	A5G4	A5G4	N/A	A5G4
N/A	N/A	Northern Territory Deemed to Comply Standards Manual	N/A	N/A	2.2.4	N/A
SA TS 5344	2019	Permanent labelling for Aluminium Composite Panel (ACP) products	A5G8	A5G8	N/A	A5G8
TN 61	N/A	Cement Concrete and Aggregates Australia — Technical note — Articulated walling	N/A	H1D4	N/A	N/A

No.	Date	Title	Volume One	Volume Two	Housing Provisions	Volume Three
WMK NOD 2021/4.2	2021	WaterMark Notice of Direction 2021/4.2 Certification transition arrangements for lead free plumbing products	A5G4	A5G4	N/A	A5G4

Table Notes

(1) For AS/NZS ISO 717.1:

(a) Test reports based on AS 1276—1979 and issued prior to AS/NZS 1276.1—1999 being referenced in the NCC remain valid.

(b) The STC values in reports based on AS 1276—1979 must be considered to be equivalent to Rw values.

(c) Test reports based on AS/NZS 1276.1 prepared after the NCC reference date for AS/NZS 1276.1—1999 must be based on that version.

(d) Test reports based on ISO 717-1—1996 and issued prior to AS/NZS ISO 717.1—2004 being referenced in the NCC remain valid.

(e) Reports based on AS/NZS ISO 717.1 relating to tests carried out after the NCC reference date for AS/NZS ISO 717.1—2004 must relate to the amended Standard.

(2) For AS 1562.1, tests carried out based on AS 1562.1—1992 and issued prior to AS 1562.1—2018 being referenced in the NCC remain valid. Reports relating to tests carried out after the NCC reference date for AS 1562.1 must relate to the revised Standard.

(3) For AS 1670.1, AS 1670.3 and AS1670.4, notwithstanding A4G1(5), until the adoption of NCC 2025 the editions of the documents listed in Table 1.8 of AS 1670.1, AS 1670.3 and AS 1670.4 may be used to meet the requirements of AS 1670.1, AS 1670.3 and AS 1670.4 as applicable.

(4) For AS 2047:

(a) Tests carried out under earlier editions of AS 2047 remain valid.

(b) Reports based on AS 2047 relating to tests carried out after the NCC reference date for AS 2047—2014 Amendment 2 must relate to the amended Standard.

(5) For AS 3786:

(a) Tests carried out under AS 3786—2014 Amendment 1 remain valid.

(b) Reports based on AS 3786 relating to tests carried out after the NCC reference date for AS 3786—2014 Amendment 2 must relate to the amended Standard.

(6) Test reports based on the 2005 edition of AS/NZS 4020 will continue to be accepted until 1 May 2024. Test reports prepared after the NCC reference date for the 2018 edition of AS/NZS 4020 must be based on the 2018 edition.

(7) For AS 4586:

(a) Test reports based on the 2004 edition of AS/NZS 4586 and issued prior to the 2013 edition of AS 4586 being referenced in the NCC remain valid.

(b) Test reports prepared after the NCC reference date of the 2013 edition of AS 4586 must be based on that version.

(c) For the purposes of assessing compliance, the slip-resistance classifications of V, W and X in reports based on the 2004 edition of AS/NZS 4586 may be considered to be equivalent to slip-resistance classifications of P5, P4 and P3 respectively in the 2013 edition of AS 4586.

(d) Test reports based on Appendix D of AS 4586—2013 and issued prior to the NCC reference date for AS 4586—2013 (incorporating Amendment 1) remain valid.

(e) Test reports based on Appendix D of AS 4586—2013 and prepared after the NCC reference date for AS 4586—2013 (incorporating Amendment 1) must be based on that version.

(8) Tests carried out based on AS/NZS 2918—2001 and issued prior to AS/NZS 2918—2018 being referenced in the NCC remain valid. Reports relating to tests carried out after the NCC reference date for AS/NZS 2918 must relate to the revised Standard.

(9) For AS 2699 Parts 1 and 3:

(a) For AS 2699.1, the 2000 edition has been retained for a transitional period ending on 30 April 2025.

(b) For AS 2699.3, the 2002 edition has been retained for a transitional period ending on 30 April 2025.

(10) For AS 1397, the 2011 edition has been retained for a transitional period ending on 31 August 2023.

(11) For AS/NZS 3500.3, the 2018 edition has been retained for a transitional period ending on 31 August 2023.

NSW Table 1

NT Table 1

QLD Table 1

SA Table 1

TAS Table 1

VIC Table 1

WA Table 1

Schedule 3 Commonwealth of Australia

Footnote: Other legislation and policies affecting buildings

Footnote: Other legislation and policies affecting buildings

In addition to any applicable provisions of this Code, there are a number of other legislative technical requirements and policies affecting the design, construction and/or performance of buildings that practitioners may need to be aware of, including, but not necessarily limited to, the following list. Additional legislative instruments such as regulations, codes and standards may exist under the legislation listed.

1. Aged Care Buildings

Administering Agency

Department of Health and Aged Care

Relevant Legislation

Aged Care Act 1997

2. Australian Capital Territory

Administering Agency

Department of Finance, section 27 insofar as it relates to the declaration of land in the Australian Capital Territory to be National Land where the land is required for Commonwealth purposes other than for the special purposes of Canberra as the National Capital.

Department of Infrastructure, Transport, Regional Development, Communications and the Arts, except to the extent administered by the Minister for Finance.

Relevant Legislation

Australian Capital Territory (Planning and Land Management) Act 1988

National Capital Plan (established under the Australian Capital Territory (Planning and Land Management) Act 1988)

Administering Agency

Department of Infrastructure, Transport, Regional Development and Communications and the Arts.

Relevant Legislation

Parliament Act 1974

Australian Capital Territory National Land (Leased) Ordinance 2022

Australian Capital Territory National Land (Unleased) Ordinance 2022

3. Indian Ocean Territories

Administering Agency

Department of Infrastructure, Transport, Regional Development, Communications and the Arts

Relevant Legislation

Christmas Island Act 1958

Cocos (Keeling) Islands Act 1955

4. Communications and Information Technology

Administering Agency

Department of Infrastructure, Transport, Regional Development, Communications and the Arts

Relevant Legislation

Australian Postal Corporation Act 1989

National Transmission Network Sale Act 1998

Telecommunications Act 1997

Telstra Corporation Act 1991

Telecommunications (Consumer Protection and Service Standards) Act 1999

Relevant Policy

Telecommunications Infrastructure in New Development (TIND) Policy

5. Defence Buildings

Administering Agency

Department of Defence

Relevant Legislation

Defence Act 1903

Relevant Regulations

Defence Regulation 2016, Part 11A

Relevant Codes, Standards and Publications

Manual of Fire Protection Engineering

Building Works Manual

Manual of Infrastructure Engineering - Electrical

The Defence Estate Quality Management System (DEQMS) https://defence.gov.au/EstateManagement/

6. Disability Discrimination

Administering Agency

Attorney-General's Department

Relevant Legislation

Disability (Access to Premises - Buildings) Standards 2010

Disability Discrimination Act 1992

Disability Standards for Accessible Public Transport 2002

Disability Standards for Education 2005, noting this:

- does not affect the application of premises standards to building work (including construction of a new building) undertaken as an adjustment or part of an adjustment; and
- does not require the building work to meet specifications more onerous than those required by the premises standards.

7. Environment

Administering Agency

Department of Climate Change, Energy, the Environment and Water

Relevant Policy

Energy Efficiency in Government Operations (2007)

Relevant Legislation

Environment Protection and Biodiversity Conservation Act 1999

Environment Protection and Biodiversity Conservation Regulations 2000

8. Federal Airports

Administering Agency

Department of Infrastructure, Transport, Regional Development, Communications and the Arts

Relevant Legislation

Airports Act 1996

Airports Regulations 1997

Airports (Building Control) Regulations 1996

Airports (Control of On-Airport Activities) Regulations 1997

Airports (Environmental Protection) Regulations 1997

Airports (Protection of Airspace) Regulations 1996

9. Jervis Bay Territory

Administering Agency

Department of Infrastructure, Transport, Regional Development, Communications and the Arts

Relevant Legislation

Jervis Bay Territory Acceptance Act 1915

10. Occupational Health and Safety

Administering Agency

Department of Employment and Workplace Relations

Relevant Legislation

Work Health and Safety Act 2011

Work Health and Safety Regulations 2011

11. Australian Antarctic Territory

Administering Agency

Department of Climate Change, Energy, the Environment and Water (Australian Antarctic Division)

Relevant Legislation

Antarctic Treaty (Environment Protection) Act 1980

Antarctic Treaty (Environment Protection) (Environmental Impact Assessment) Regulations 1993

Antarctic Treaty (Environment Protection) (Waste Management) Regulations 1994

Environment Protection and Biodiversity Conservation Act 1999

Environment Protection and Biodiversity Conservation Regulations 2000

12. Territory of Heard Island and McDonald Islands

Administering Agency

Department of Climate Change, Energy, the Environment and Water (Australian Antarctic Division)

Relevant Legislation

Environment Protection and Management Ordinance 1987 (HIMI)

Environment Protection and Biodiversity Conservation Act 1999

Heard Island and McDonald Islands Marine Reserve management plan in operation under the Environment Protection and Biodiversity Conservation Act 1999

Environment Protection and Biodiversity Conservation Regulations 2000

13. National or World Heritage Places

Administering Agency

Department of Climate Change, Energy, the Environment and Water

Relevant Legislation

Environment Protection and Management Ordinance 1987 (HIMI)

Antarctic Treaty (Environment Protection) (Environmental Impact Assessment) Regulations 1993

Environment Protection and Biodiversity Conservation Act 1999

Heard Island and McDonald Islands Marine Reserve management plan in operation under the Environment Protection and Biodiversity Conservation Act 1999

Environment Protection and Biodiversity Conservation Regulations 2000

14. National Parks

Administering Agency

Director of National Parks, Climate Change, Energy, the Environment and Water Portfolio

Relevant Legislation

Commonwealth Reserve management plans in operation under the Environment Protection and Biodiversity Conservation Act 1999

Environment Protection and Biodiversity Conservation Act 1999

Environment Protection and Biodiversity Conservation Regulations 2000

15. Commonwealth funding for building work

Administering Agency

Department of Employment and Workplace Relations

Australian Building and Construction Commission (ABCC)

Office of the Federal Safety Commissioner (OFSC)

Relevant Legislation

Building and Construction Industry (Improving Productivity) Act 2016 (BCIIP Act) (See Notes 1, 2 and 3)

- Code for the Tendering and Performance of Building Work 2016 (Building Code 2016)
- Building and Construction (Improving Productivity) (Accreditation Scheme) Rules 2019 (WHS Accreditation Scheme)
- Building and Construction Industry (Improving Productivity) (Federal Safety Officers) General Directions 2017

16. Commonwealth buildings

Administering Agency

Department of Employment and Workplace Relations

Office of the Federal Safety Commissioner

Relevant Legislation

Building and Construction Industry (Improving Productivity) Act 2016 (BCIIP Act) (See Notes 1, 2 and 3)

Building and Construction (Improving Productivity) (Accreditation Scheme) Rules 2019

Building and Construction Industry (Improving Productivity) (Federal Safety Officers) General Directions 2017

Notes

(1) The BCIIP Act is concerned with the regulation of Workplace Relations in the building industry, it also establishes the Australian Building and Construction Commission (ABCC) (as the workplace relations regulator for the industry) and the Office of the Federal Safety Commissioner (OFSC).

(2) The BCIIP Act legislates additional requirements for those building contractors undertaking Commonwealth funded building work through the Building Code 2016, regulated by the ABCC, and the Work Health and Safety Accreditation Scheme (WHS Accreditation Scheme), administered by the OFSC. Of direct relevance to the NCC: Provisions in BCIIP Act include a requirement that the Federal Safety Commissioner audits building contractors' compliance with the NCC in relation to building materials, which is a condition of accreditation under the WHS Accreditation Scheme.

(3) The Australian Government has committed to abolish the ABCC and the Building Code 2016. To achieve this, the Government has introduced the Fair Work Legislation Amendment (Secure Jobs, Better Pay) Bill 2022 (the Bill) which would repeal provisions of the BCIIP Act that provide for the ABCC and the Building Code 2016. The Bill would also retain provisions of the BCIIP Act that provide for the OFSC and the WHS Accreditation Scheme in a renamed Act, the Federal Safety Commissioner Act 2022. Builders undertaking Commonwealth-funded building work would still be required to comply with the NCC.

Schedule 4 Australian Capital Territory

Introduction

Footnote: Other legislation affecting buildings

ACT Introduction

The Australian Capital Territory Appendix to the Building Code of Australia (BCA) forms part of the ACT Building Code published in accordance with the Building Act 2004. This Appendix contains variations and additions to the BCA that apply to building work undertaken in the ACT and information about the application of the BCA in the ACT. The ACT Appendix is notified on the ACT Legislation Register and can be found at https://www.legislation.act.gov.au/a/2004-11/ under the Regulations and Instruments tab.

While the BCA text includes indicators of potential ACT-specific clauses, including variations and additions, not all current ACT-specific clauses may be indicated. Users of the BCA must check that they are using the version of the ACT Appendix currently in force and are applying all relevant variations and additions. Historical version of the ACT Appendix are also available on the register.

ACT Footnote: Other legislation affecting buildings

In addition to any applicable provisions of the Building Act 2004 and this Code, there are other legislative technical requirements affecting the design, construction and/or performance of buildings that practitioners may need to be aware of. A list of relevant legislation and links to where it can be found on the ACT Legislation Register can be found in the ACT Appendix at https://www.legislation.act.gov.au/a/2004-11/ under the Regulations and Instruments tab.

In addition to this Code, there are a number of other legislative technical requirements affecting the design, construction, installation, replacement, repair, alteration and maintenance of a building that practitioners may need to be aware of including, but not necessarily limited to, the following list.

1. Plumbing and Drainage

Administering Agency

Environment, Planning and Sustainable Development Directorate

Chief Minister, Treasury and Economic Development Directorate (regulator)

Relevant Legislation

Water and Sewerage Act 2000

2. Building

Administering Agency

Environment, Planning and Sustainable Development Directorate

Chief Minister, Treasury and Economic Development Directorate (regulator)

Relevant Legislation

Building Act 2004

3. Health

Administering Agency

ACT Health Directorate

Canberra Health Services

Relevant Legislation

Health Act 1993

4. Environment

Administering Agency

Environment, Planning and Sustainable Development Directorate

Relevant Legislation

Environment Protection Act 1997

5. Gas

Administering Agency

Environment, Planning and Sustainable Development Directorate

Chief Minister, Treasury and Economic Development Directorate (regulator)

Relevant Legislation

Gas Safety Act 2000

6. Electrical

Administering Agency

Environment, Planning and Sustainable Development Directorate

Chief Minister, Treasury and Economic Development Directorate (regulator)

Relevant Legislation

Electricity Safety Act 1971

7. Utilities

Administering Agency

Environment, Planning and Sustainable Development Directorate

Justice and Community Safety Directorate

Transport Canberra and City Services Directorate

Chief Minister, Treasury and Economic Development Directorate (regulator)

Relevant Legislation

Utilities Act 2000

8. Planning

Administering Agency

Environment, Planning and Sustainable Development Directorate

Relevant Legislation

Planning and Development Act 2007

Schedule 5 New South Wales

Introduction

Section A Governing requirements

Part A6	Building classification
NSW A6G7	Class 6 buildings

Section C Fire resistance

Part C2	Fire resistance and stability
NSW C2D11	Fire hazard properties
Part C3	Compartmentation and separation
C3D6	Class 9 buildings
Part C4	Protection of openings
C4D12	Bounding construction: Class 2 and 3 buildings and Class 4 parts
Specification 7	Fire hazard properties
S7C7	Other materials

Section D Access and egress

Part D2	Provision for escape
D2D3	Number of exits required
D2D8	Width of exits and paths of travel to exits
NSW D2D9	Width of doorways in exits or paths of travel to exits
D2D15	Discharge from exits
D2D18	Number of persons accommodated
Part D3	Construction of exits
NSW D3D2	Application of Part
D3D14	Goings and risers
NSW D3D16	Thresholds
D3D18	Height of barriers
D3D24	Doorways and doors
D3D26	Operation of latch
NSW D3D31	Doors in paths of travel to an entertainment venue

Section E Services and equipment

Part E2	Smoke hazard management
NSW E2D10	Buildings not more than 25 m in effective height: large isolated buildings subject to C3D4
NSW E2D16	Class 9b – assembly buildings: all
NSW E2D17	Class 9b – assembly buildings: night clubs, discotheques and the like
NSW E2D18	Class 9b – assembly buildings: exhibition halls, museums and art galleries
NSW E2D19	Class 9b – assembly buildings: other assembly buildings (not listed in NSW E2D16 to E2D18)
NSW E2D20	Class 9b assembly buildings: other assembly buildings (not listed in E2D16 to E2D19)
Part E4	Visibility in an emergency, exit signs and warning systems

	NSW E4D6	Direction signs
	Specification 20	Smoke detection and alarm systems
	NSW S20C8	System monitoring
Section F	**Health and amenity**	
	Part F4	Sanitary and other facilities
	NSW F4P6	Microbial control for water systems
	F4D4	Facilities in Class 3 to 9 buildings
	NSW F4D10	Microbial (legionella) control
	Part F6	Light and ventilation
	NSW F6D6	Ventilation of rooms
Section G	**Ancillary provisions**	
	Part G1	Minor structures and components
	NSW G1P2	Swimming pool access and water recirculation systems
	NSW G1D2	Swimming pools
	NSW G1D5	Provision for cleaning windows
	Part G5	Construction in bushfire prone areas
	NSW G5P1	Bushfire resistance
	NSW G5P2	Additional bushfire requirements for Class 9 buildings that are a special fire protection purpose
	NSW G5D2	Application of Part
	NSW G5D3	Protection
	NSW G5D4	Protection – Class 9 buildings used as a special fire protection purpose
	NSW Part G7	Livable housing design
	Specification 43	Bushfire protection for certain Class 9 buildings
	NSW S43C2	Separation from classified vegetation
	NSW S43C11	Supply of water for fire-fighting purposes
Section I	**Special use buildings**	
	Part I1	Class 9b buildings
	NSW I1D1	Application of Part
NSW Part I4	**Entertainment venues other than temporary structures and drive-in theatres**	
	Deemed-to-Satisfy Provisions	
	NSW I4D1	Application of Part
	NSW I4D2	Fire separation
	NSW I4D3	Foyer space
	NSW I4D4	Sprinkler systems for common foyers
	NSW I4D5	Conventional stages: application
	NSW I4D6	Conventional stages: extent of stage area
	NSW I4D7	Conventional stages: small stages
	NSW I4D8	Conventional stages: large stages
	NSW I4D9	Conventional stages: fire separation of stages
	NSW I4D10	Non-conventional stages: application
	NSW I4D11	Non-conventional stages: small stages
	NSW I4D12	Non-conventional stages: large stages

NSW I4D13	Flying scenery
NSW I4D14	Load notice
NSW I4D15	Safety curtains
NSW I4D16	Safety curtains — additional requirements
NSW I4D17	Seating in rows: application
NSW I4D18	Seating in rows: number of seats
NSW I4D19	Seating in rows: chairs used for seating
NSW I4D20	Seating in rows: chairs in auditoriums — level floors
NSW I4D21	Seating in rows: chairs in auditoriums — sloping floors
NSW I4D22	Seating in rows: radiating aisles in seating areas
NSW I4D23	Seating in rows: aisles and cross-overs
NSW I4D24	Seating in rows: platforms and steps
NSW I4D25	Seating in rows: stepped platforms
NSW I4D26	Continental seating: application
NSW I4D27	Continental seating: seating to be fastened
NSW I4D28	Continental seating: maximum seats per row
NSW I4D29	Continental seating: depth of seating
NSW I4D30	Continental seating: clearance between rows
NSW I4D31	Continental seating: chairs used for seating
NSW I4D32	Continental seating: egress doorways
NSW I4D33	Continental seating: clear areas
NSW I4D34	Continental seating: minimum clear space
NSW I4D35	Continental seating: doors
NSW I4D36	Provision of guardrails: location
NSW I4D37	Provision of guardrails: fixed back seats
NSW I4D38	Provision of guardrails: steps between platforms
NSW I4D39	Guardrails for seating areas: application
NSW I4D40	Guardrails for seating areas: continental seating
NSW I4D41	Guardrails for seating areas: balconies and boxes
NSW I4D42	Guardrails for seating areas: cross-overs
NSW I4D43	Dressing rooms
NSW I4D44	Storerooms
NSW I4D45	Projection suites: Application
NSW I4D46	Projection suites: rooms to be provided
NSW I4D47	Projection suites: fire separation
NSW I4D48	Projection suites: concession for protection of some openings
NSW I4D49	Basement storeys
NSW I4D50	Basement storeys: more than two
NSW I4D51	Electric mains installation: main switchboard
NSW I4D52	Electric mains installation: circuit protection
NSW I4D53	Electric mains installation: separate sub-mains
NSW I4D54	Lighting: lighting switches
NSW I4D55	Lighting: lighting levels
NSW I4D56	Lighting: provision of aisle lighting
NSW I4D57	Lighting: aisle lighting power supply
NSW I4D58	Lighting: aisle lighting alternative lighting supply

	NSW I4D59	Automatic smoke-and-heat vents for stages
	NSW I4D60	Solid fuel burning stoves and open fire places
	NSW I4D61	Fuel gas cylinders: general
	NSW I4D62	Fuel gas cylinders: enclosures
NSW Part I5	**Temporary structures**	
	Deemed-to-Satisfy Provisions	
	NSW I5D1	Application of Part
	NSW I5D2	Exits — exclusions
	NSW I5D3	Location of exits
	NSW I5D4	Exits to be provided
	NSW I5D5	Vertical clearance for exits
	NSW I5D6	Curtains across exits
	NSW I5D7	Curtains and blinds
	NSW I5D8	Fabrics
	NSW I5D9	Guardrails
	NSW I5D10	Seating
	NSW I5D11	Sanitary accommodation
	NSW I5D12	Projection suites
	NSW I5D13	Fireplaces and heating
	NSW I5D14	Electrical services
	NSW I5D15	Artificial lighting: general
	NSW I5D16	Emergency lighting
	NSW I5D17	Emergency lighting power supply
	NSW I5D18	Exit signs
	NSW I5D19	Fire-fighting services
NSW Part I6	**Drive-in theatres**	
	Deemed-to-Satisfy Provisions	
	NSW I6D1	Application of Part
	NSW I6D2	Speaker standards
	NSW I6D3	Lines of speaker standards
	NSW I6D4	Electrical services
	NSW I6D5	Vehicular entrances
	NSW I6D6	Lighting
Section J	**Energy efficiency**	
	Part J2	Energy efficiency
	J2D1	Deemed-to-Satisfy Provisions
	NSW J2D2	Application of Section J
	Part J3	Elemental provisions for a sole-occupancy unit of a Class 2 building or a Class 4 part of a building
	J3D1	Deemed-to-Satisfy Provisions
	NSW J3D2	Application of Part
	NSW J3D3	Reducing heating and cooling loads of a sole-occupancy unit of a Class 2 building or a Class 4 part of a building using house energy rating software
	NSW J3D4	Ceiling fans in a sole-occupancy unit of a Class 2 building or a

	Class 4 part of a building
NSW J3D7	Roofs and ceilings of a sole-occupancy unit of a Class 2 building or a Class 4 part of a building
NSW J3D8	External walls of a sole-occupancy unit of a Class 2 building or a Class 4 part of a building
NSW J3D9	Wall-glazing construction of a sole-occupancy unit of a Class 2 building or a Class 4 part of a building
J3D10	Floors of a sole-occupancy unit of a Class 2 building or a Class 4 part of a building
NSW J3D11	External winter glazing of a sole-occupancy unit of a Class 2 building or a Class 4 part of a building
NSW J3D12	External summer glazing of a sole-occupancy unit of a Class 2 building or a Class 4 part of a building
NSW J3D13	Shading of a sole-occupancy unit of a Class 2 building or a Class 4 part of a building
NSW J3D14	Net equivalent energy usage of a sole-occupancy unit of a Class 2 building or a Class 4 part of a building
NSW J3D15	Net equivalent energy usage for a sole-occupancy unit of a Class 2 building or Class 4 part of building – home energy rating software
Part J4	Building fabric
J4D1	Deemed-to-Satisfy Provisions
NSW J4D2	Application of Part
NSW J4D3	Thermal construction—general
NSW J4D6	Walls and glazing
Part J5	Building sealing
J5D1	Deemed-to-Satisfy Provisions
NSW J5D2	Application of Part
NSW J5D5	Windows and doors
Part J6	Air-conditioning and ventilation
J6D1	Deemed-to-Satisfy Provisions
NSW J6D2	Application of Part
J6D10	Space heating
Part J7	Artificial lighting and power
J7D1	Deemed-to-Satisfy Provisions
NSW J7D2	Application of Part
J7D3	Artificial lighting
J7D4	Interior artificial lighting and power control
Part J8	Heated water supply and swimming pool and spa pool plant
J8D1	Deemed-to-Satisfy Provisions
NSW J8D3	Swimming pool heating and pumping
NSW J8D4	Spa pool heating and pumping
Part J9	Energy monitoring and on-site distributed energy resources
J9D1	Deemed-to-Satisfy Provisions

NSW Part J1 Energy efficiency

Objectives

NSW J1O1 Objective

Functional Statements

NSW J1F1 Energy efficiency

Performance Requirements

NSW J1P1 Energy use

NSW J1P4 Renewable energy and electric vehicle charging

NSW J1P5 Building fabric—Class 2 building and Class 4 parts of a building

NSW J1P6 Building sealing—Class 2 building and Class 4 parts of a building

NSW J1P7 Services—Class 2 building and Class 4 parts of a building

Verification Methods

NSW J1V1 NABERS Energy

NSW J1V2 Green star

NSW J1V3 Verification using a reference building

NSW J1V4 Verification of building envelope sealing

Schedule 1 Definitions

Schedule 2 Referenced documents

Footnote: Other legislation affecting buildings

NSW Introduction

The NSW Building Code technical package consists of—

(a) the Building Code of Australia (BCA) Volume One and Volume Two; and

(b) the New South Wales BCA Appendix which contains variations to the requirements of the BCA and additional provisions applicable in New South Wales.

The technical package is accompanied by administrative provisions contained within the Environmental Planning and Assessment (EP&A) Act 1979, the Environmental Planning and Assessment (EP&A) Regulation 2021 and the Environmental Planning and Assessment (EP&A) (Development Certification and Fire Safety) Regulation 2021.

Note:

Where NSW has inserted or replaced a whole clause or part, the clause or part reference will be preceded by the prefix NSW. i.e. NSW C3D6(3). All table and image references which are replaced or inserted will also have a similar prefix. Where NSW has not replaced a complete clause but modified, inserted or replaced part of a clause, the prefix has been omitted and the parent clause reference remains unchanged.

Section A Governing requirements

Part A6 Building classification

Delete A6G7 and insert NSW A6G7 as follows:

NSW A6G7 Class 6 buildings

[2019: NSW A6.6]

A Class 6 building is a shop or other building for sale of goods by retail or the supply of services direct to the public, including—

(a) an eating room, cafe, restaurant, milk or soft drink bar; or

(b) a dining room, bar, shop or kiosk part of a hotel or motel; or

(c) a hairdresser's or barber's shop, public laundry, or undertaker's establishment; or

(d) market or sale room, showroom, or *service station*; or

(e) *small live music or arts venue*.

Section C Fire resistance

Part C2 Fire resistance and stability

Delete C2D11 and insert NSW C2D11 as follows:

NSW C2D11 Fire hazard properties

[2019: C1.10 and NSW C1.10]

(1) The *fire hazard properties* of the following internal linings, materials and assemblies within a Class 2 to 9 building must comply with Specification 7:

(a) Floor linings and floor coverings.

(b) Wall linings and ceiling linings.

(c) Air-handling ductwork.

(d) Lift cars.

(e) In Class 9b buildings used as—

(i) an *entertainment venue*, a material used to cover closed back upholstered seats; and

(ii) a public hall or the like, a proscenium curtain *required* by Specification 32.

(f) Escalators, moving walkways and non-*required* non *fire-isolated stairways* or pedestrian ramps subject to Specification 14.

(g) *Sarking-type materials*.

(h) Attachments to floors, ceilings, *internal walls*, *common walls*, *fire walls* and to internal linings of *external walls*.

(i) Other materials including insulation materials other than *sarking-type materials*.

(2) Paint or fire-retardant coatings must not be used in order to make a material comply with a *required fire hazard property*, except in respect of a material referred to in NSW Specification 7, NSW Table S7C7 and to which Notes 4 and 5 are applicable.

(3) The requirements of (1) do not apply to a material or assembly if it is—

(a) plaster, cement render, concrete, terrazzo, ceramic tile or the like; or

(b) a *fire-protective covering*; or

(c) a timber-framed *window*; or

(d) a solid timber handrail or skirting; or

(e) a timber-faced door; or

(f) an electrical switch, socket-outlet, cover plate or the like; or

(g) a material used for—

(i) a roof insulating material applied in continuous contact with a substrate; or

(ii) an adhesive; or

(iii) a *damp-proof course*, *flashing*, caulking, sealing, ground moisture barrier, or the like; or

(h) a paint, varnish, lacquer or similar finish, other than nitro-cellulose lacquer; or

(i) a clear or translucent roof light of glass fibre-reinforced polyester if—

(i) the roof in which it is installed forms part of a single *storey* building *required* to be Type C construction; and

(ii) the material is used as part of the roof covering; and

(iii) it is not closer than 1.5 m from another roof light of the same type; and

(iv) each roof light is not more than 14 m^2 in area; and

(v) the area of the roof lights per 70 m^2 of roof surface is not more than 14 m^2; or

(j) a face plate or neck adaptor of supply and return air outlets of an air handling system; or

(k) a face plate or diffuser plate of light fitting and emergency *exit* signs and associated electrical wiring and electrical components; or

(l) a joinery unit, cupboard, shelving, or the like; or

(m) an attached non-building fixture and fitting such as—

(i) a curtain, blind, or similar decor, other than—

(A) a proscenium curtain *required* by Specification 32; or

(B) in a Class 9b building used as an *entertainment venue*, a material regulated under NSW Table S7C7; and

(ii) a whiteboard, *window* treatment or the like; or

(n) timber treads, risers, landings and associated supporting framework installed in accordance with D3D30 where the *Spread-of-Flame Index* and the *Smoke-Developed Index* of the timber does not exceed 9 and 8 respectively; or

(o) any other material that does not significantly increase the hazards of fire.

Part C3 Compartmentation and separation

C3D6 Class 9 buildings

[2019: C2.5]

Delete C3D6(3) and insert NSW C3D6(3) as follows:

(3) A Class 9c building must comply with the following:

(a) A building must be divided into areas not more than 500 m^2 by smoke proof walls complying with Specification 11.

(b) A *fire compartment* must be separated from the remainder of the building by *fire walls* and notwithstanding C3D8 and Specification 5, floors with an FRL of not less than 60/60/60.

(c) Except for walls provided in accordance with (3)(a) and (b), non-loadbearing *internal walls*, and if a building is of Type C construction — all *internal walls*, between and bounding *sole-occupancy units* and bounding a *public corridor* in a *resident use area* must:

(i) be lined on each side with standard grade plasterboard not less than 13 mm thick or a material with at least an equivalent level of fire protection; and

(ii) if provided with cavity insulation, contain only *non-combustible* insulation; and

(iii) extend to the underside of—

(A) the floor next above; or

(B) a ceiling lined with standard grade plasterboard not less than 13 mm thick or an equivalent non-combustible material; or

(C) a *non-combustible* roof covering; and

(iv) not incorporate any penetrations above door head height unless the penetrations are adequately stopped to prevent the free passage of smoke; and

(v) be smoke sealed with intumescent putty or other suitable material at any construction joint, space or the like between the top of the wall and the floor, ceiling or roof.

(d) *Loadbearing internal walls* must comply with the requirements of Specification 5 and (c)(ii), (iii), (iv) and (v) above.

(e) Ancillary use areas containing equipment or materials that are a high potential *fire hazard*, must be separated from the *sole-occupancy units* by smoke proof walls complying with Specification 11.

(f) The ancillary use areas referred to in (e) include, but are not limited to, the following:

(i) A kitchen and related food preparation areas having a combined *floor area* of more than 30 m^2.

(ii) A laundry, where items of equipment are of the type that are potential fire sources (e.g. gas fire dryers).

(iii) Storage rooms greater than 10 m^2 used predominantly for the storage of administrative records.

(g) Openings in *fire walls* must be protected as follows:

(i) Doorways — *self-closing* or *automatic* closing –/60/30 fire doors.

(ii) Windows — *automatic* or permanently fixed closed –/60/– fire windows or –/60/– *automatic* fire shutters.

(iii) Other openings — construction having an FRL not less than –/60/–.

Part C4 Protection of openings

C4D12 Bounding construction: Class 2 and 3 buildings and Class 4 parts

[2019: C3.11]

Delete C4D12(4) and insert NSW C4D12(4) as follows:

(4) Except as provided for in NSW C4D12(5), protection for a doorway *required* under (1), (2) or (3) must be at least—

(a) in a building of Type A construction — a *self-closing* –/60/30 fire door; and

(b) in a building of Type B or C construction — a *self-closing*, tight fitting, solid core door not less than 35 mm thick.

Delete C4D12(5) and insert NSW C4D12(5) as follows:

(5) In a Class 3 building used as a *residential care building* protected with a sprinkler system complying with Specification 17, protection for a doorway must be at least a tight fitting solid core door not less than 35 mm thick that is—

(a) *self-closing*; or

(b) fitted with a free-arm action closing device which closes the door or causes the door to remain closed (without preventing manual re-opening), upon the detection of smoke caused by a smoke detector located within the room.

Insert subclause NSW C4D12(10) in clause C4D12 as follows:

(10) In a Class 9b building used as an *entertainment venue*, openings in construction *required* to separate one space from another must be protected in accordance with C4D5.

Specification 7 Fire hazard properties

S7C7 Other materials

[2019: Spec C1.10: 7]

Delete Table S7C7 and insert NSW Table S7C7 as follows:

NSW Table S7C7: Other materials

Material or assembly location	*Flammability Index*	*Spread-of-Flame Index*	*Smoke-Developed Index*
Fire control rooms subject to Specification 19 and fire-isolated *exits*, other than a *sarking-type material* used in a ceiling or used as an attachment or part of an attachment to a building element. Note 1	N/A	0	2

Material or assembly location	*Flammability Index*	*Spread-of-Flame Index*	*Smoke-Developed Index*
Class 9b buildings used as an *entertainment venue*, a material used to cover closed back upholstered seats in any part available to the public—where smoking is permitted; or flame is exposed in connection with the preparation of meals Note 4	N/A	6	5
Class 9b buildings used as an *entertainment venue*, a material used as a curtain, blind or similar decor in any part available to the public. Notes 4 and 5	6	N/A	N/A
Class 9b buildings used as an *entertainment venue*, a material used to form a cinematograph screen. Notes 4, 5 and 6	12	0	7
Class 9b buildings used as a public hall or the like: A proscenium curtain required by Specification 32.	N/A	0	3
Escalators, moving walkways or non-*required* non *fire-isolated stairways* or pedestrian ramps subject to Specification 14.	N/A	0	5
Sarking-type materials: In a fire control room subject to Specification 19 or a fire-isolated *exit* used in the form of an exposed wall or ceiling.	0	N/A	N/A
Sarking-type materials other than in a fire control room subject to Specification 19 or a fire-isolated *exit* used in the form of an exposed wall or ceiling. Note 2	5	N/A	N/A
Other materials or locations and insulation materials other than *Sarking-type materials*. Notes 2 and 3	N/A	9	8 if the *Spread-of-Flame Index* is more than 5

Table Notes

(1) In a fire control room or *fire-isolated stairway*, a material used as an attachment or part of an attachment to a building element must, if *combustible*, be attached directly to a *non-combustible* substrate and not exceed 1 mm finished thickness.

(2) A material, other than one located within a fire-isolated *exit* or fire control room, may be covered on all faces by concrete or masonry not less than 50 mm thick, as an alternative to meeting the specified indices.

(3) In the case of a composite member or assembly, the member or assembly must be constructed so that when

assembled as proposed in a building—

(a) any material which does not comply with this Table is protected on all sides and edges from exposure to the air; and

(b) the member or assembly, when tested in accordance with Specification 3, has a *Spread-of-Flame Index* and *Smoke-Developed Index* not exceeding those prescribed in this Table; and

(c) the member or assembly retains the protection in position so that it prevents ignition of the material and continues to screen it from access to free air for a period of not less than 10 minutes.

(4) Any fire-retardant coating used in an *entertainment venue* to make a material comply with a *required Flammability Index*, *Spread-of-Flame Index* or *Smoke-Developed Index* must be certified by—

(a) its manufacturer or distributor—

(i) as approved for use with the fabric to achieve the *required* indices; and

(ii) to retain its retardancy effect after a minimum of 5 commercial dry cleaning or laundering operations carried out in accordance with AS 2001.5.4, Procedure 7A, using non-phosphate ECE reference detergent A (without optical brightener); and

(b) the applicator as having been carried out in accordance with the manufacturer's specification.

(5) Materials used in an *entertainment venue* must have a label affixed to a representative sample of each different material indicating, in legible characters—

(a) name of manufacturer; and

(b) trade name and description of material's composition; and

(c) retardant treatment (if any), name of applicator and date of application; and

(d) AS 1530 Part 2 and/or AS/NZS 1530 Part 3 test number and its *Flammability Index*, *Spread-of-Flame Index* and *Smoke-Developed Index*; and

(e) approved methods of cleaning.

(6) A cinematograph screen must have a supporting frame of metal construction.

Section D Access and egress

Part D2 Provision for escape

D2D3 Number of exits required

[2019: D1.2]

Delete D2D3(4) and insert NSW D2D3(4) as follows:

(4) Class 9 buildings—

(a) In addition to any *horizontal exit*, not less than 2 *exits* must be provided from the following:

(i) Each *storey* if the building has a *rise in storeys* of more than 6 or an *effective height* of more than 25 m.

(ii) Any *storey* which includes a *patient care area* in a Class 9a *health-care building*.

(iii) Any *storey* that contains sleeping areas in a Class 9c building.

(iv) Any *storey* used as a Class 9b *early childhood centre*, or any Class 9b *early childhood centre* which forms part of a *storey*.

(v) Each *storey* in a primary or secondary *school* with a *rise in storeys* of 2 or more.

(vi) Any *storey* or *mezzanine* that accommodates more than 50 persons, calculated under D2D18.

(vii) Any *storey* or *mezzanine* within an *auditorium* in an *entertainment venue*.

(b) The requirements of (a) do not apply to a part of a *storey* that—

(i) is a plant room, machinery room, storeroom, lift-machine room or the like; and

(ii) is provided with direct egress to a road, *open space* or a fire-isolated *exit* complying with D2D12(2); and

(iii) satisfies D2D5 by the provision of 1 *exit*.

D2D8 Width of exits and paths of travel to exits

[2019: D1.6(b), (c), (d) and (e)]

Insert subclause NSW D2D8(5) in clause D2D8 as follows:

(5) In a Class 9b building used as an *entertainment venue*—

(a) the aggregate width must be not less than 2 m plus 500 mm for every 50 persons or part in excess of 200; and

(b) D2D8(1), (2) and (3) do not apply; and

(c) where one or more paths of travel merge, the width of the combined path of travel must be not less than the sum of the *required* widths of those paths of travel; and

(d) the *required* widths of those paths of travel connecting the *exits* from the building to a public road or *open space* must comply with (c); or

Delete D2D9 and insert NSW D2D9 as follows:

NSW D2D9 Width of doorways in exits or paths of travel to exits

[2019: D1.6, NSW D1.6(f)(vi)]

In a *required exit* or path of travel to an *exit*, the unobstructed width of a doorway must be not less than—

(a) in *patient care areas* through which patients would normally be transported in beds—

(i) if the doorway provides access to, or from, a corridor of width—

(A) less than 2.2 m — 1200 mm; or

(B) 2.2 m or greater — 1070 mm; and

(ii) where the doorway referred to in (i) is fitted with two leaves and one leaf is secured in the closed position in accordance with D3D26(3)(e), the other leaf must permit an unobstructed opening not less than 800 mm

wide; or

(b) in *patient care areas* in a *horizontal exit* — 1250 mm; or

(c) the unobstructed width of each *exit* provided to comply with D2D8(1), (2), (3) or (4), minus 250 mm; or

(d) in a Class 9c building, 800 mm, except—

(i) in *resident use areas* the minimum unobstructed width must be 870 mm; and

(ii) for doorways leading from a *public corridor* to a *sole-occupancy unit* the minimum unobstructed width must be 1070 mm; and

(iii) where the doorway is fitted with two leaves and one leaf is secured in the closed position in accordance with D3D26(3)(e), the other leaf must permit an unobstructed opening not less than 870 mm wide in *resident use areas* and 800 mm wide in non-*resident use areas*; or

(e) in a Class 9b building used as an *entertainment venue*—

(i) in parts of the building used by the public, the width of the *required exit* or path of travel, and the unobstructed width of each doorway must not be less than 1 m and not more than 3 m; and

(ii) in other parts of the building, doorways must comply with NSW D2D9; or

(f) in any other case except where it opens to a *sanitary compartment* or bathroom — 750 mm wide.

D2D15 Discharge from exits

[2019: D1.10]

Delete D2D15(6) and insert NSW D2D15(6) as follows:

(6) In a Class 9b building used as an *entertainment venue*, at least half of the *required* number of *exits* from each *storey* or *mezzanine*, and at least half of the aggregate width of such *exits* must discharge otherwise than through the main entrance, or the area immediately adjacent to the main entrance to the building.

D2D18 Number of persons accommodated

[2019: D1.13]

Delete Table D2D18 and insert NSW Table D2D18 as follows:

NSW Table D2D18: Area per person according to use

Type of use	Area per person
Art gallery, exhibition area, museum	4 m^2
Auditorium — bench seating	450 mm/person
Auditorium — fixed seating	count seats
Auditorium — removable seating	1 m^2
Auditorium — standing area	0.5 m^2
Bar — standing	0.5m^2
Bar — other	1 m^2
Board room	2 m^2
Boarding house	15 m^2
Cafe, church, dining room	1 m^2
Carpark	30 m^2
Computer room	25 m^2
Court room — judicial area	10 m^2
Court room — public seating	1 m^2
Dance floor	0.5 m^2
Dormitory	5 m^2
Early childhood centre	4 m^2

Type of use	Area per person
Entertainment venue — other than *auditorium*	1.2 m^2
Factory — machine shop, fitting shop or like place for cutting, grading, finishing or fitting of metals or glass, except in the fabrication of structural steelwork or manufacture of vehicles or bulky products	5 m^2
Factory — areas used for fabrication and processing other than a machine shop, fitting shop or the like	50 m^2
Factory — a space in which the layout and natural use of fixed plant or equipment determines the number of persons who will occupy the space during working hours	Area per person determined by the use of the plant or equipment
Gymnasium	3 m^2
Hostel, hotel, motel, guest house	15 m^2
Indoor sports stadium—arena	10 m^2
Kiosk	1 m^2
Kitchen, laboratory, laundry	10 m^2
Library — reading space	2 m^2
Library — storage space	30 m^2
Office, including one for typewriting or document copying	10 m^2
Patient care areas	10 m^2
Plant room —ventilation, electrical or other service units	30 m^2
Plant room — boilers or power plant	50 m^2
Reading room	2 m^2
Restaurant	1 m^2
School — general classroom	2 m^2
School — multi-purpose hall	1 m^2
School — staff room	10 m^2
School — trade and practical area — primary	4 m^2
School — trade and practical area — secondary	As for workshop
Shop — space for sale of goods — at a level entered direct from the open air or any lower level	3 m^2
Shop — space for sale of goods — all other levels	5 m^2
Showroom — display area, covered mall or arcade	5 m^2
Skating rink, based on rink area	1.5 m^2
Small live music or arts venue – dance floor	0.5 m^2
Small live music or arts venue – *Information and education facility*	4 m^2
Small live music or arts venue – other	1 m^2
Spectator stand, audience viewing area — standing viewing area	0.3 m^2
Spectator stand, audience viewing area — removable seating	1 m^2
Spectator stand, audience viewing area — fixed seating	Per number of seats
Spectator stand, audience viewing area — bench seating	450 mm/person
Storage space	30 m^2
Swimming pool, based on pool area	1.5 m^2
Switch room, transformer room	30 m^2

Type of use	Area per person
Telephone exchange — private	30 m^2
Theatre dressing room	4 m^2
Transport terminal	2 m^2
Workshop — for maintenance staff	30 m^2
Workshop — for manufacturing processes	As for factory

Table Notes

Bar standing is an area used by the standing patrons and extends not less than 1.5 m wide from the outside edge of the bar top for the length of the serving area of the bar.

Part D3 Construction of exits

Delete D3D2 and insert NSW D3D2 as follows:

NSW D3D2 Application of Part

[2019: NSW D2.1(c)]

(1) Except for—

(a) D3D14, D3D15(a), D3D17, D3D18, D3D19, D3D20, D3D22(5), D3D22(6), D3D26 and D3D29, the *Deemed-to-Satisfy Provisions* of this Part do not apply to the internal parts of a *sole-occupancy unit* in a Class 3 building; and

(b) D3D14, D3D15(a), D3D17, D3D18, D3D19, D3D20, D3D22(5), D3D22(6), D3D23 and D3D29, the *Deemed-to-Satisfy Provisions* of this Part do not apply to the internal parts of a *sole-occupancy unit* in a Class 2 building or Class 4 part of a building.

(2) In a Class 9b building used as an *entertainment venue*—

(a) Clauses NSW D3D14(1)(i), (j), and (k), NSW D3D16(d), NSW D3D18(1)(d), and NSW D3D24(2)(e) apply to only those parts of the building used by the public; and

(b) the general requirements of Part D3 apply to all other parts of the building.

D3D14 Goings and risers

[2019: D2.13]

Delete D3D14(1) and insert NSW D3D14(1) as follows:

(1) A stairway must have—

(a) not more than 18 and not less than 2 risers in each *flight*; and

(b) going (G), riser (R) and quantity (2R + G) in accordance with Table D3D14, except as permitted by (2) and (3); and

(c) constant goings and risers throughout each *flight*, except as permitted by (2) and (3), and the dimensions of goings (G) and risers (R) in accordance with (1)(b) are considered constant if the variation between—

(i) adjacent risers, or between adjacent goings, is no greater than 5 mm; and

(ii) the largest and smallest riser within a *flight*, or the largest and smallest going within a *flight*, does not exceed 10 mm; and

(d) risers which do not have any openings that would allow a 125 mm sphere to pass through between the treads; and

(e) treads which have—

(i) a surface with a slip-resistance classification not less than that listed in Table D3D15 when tested in accordance with AS 4586; or

(ii) a nosing strip with a slip-resistance classification not less than that listed in Table D3D15 when tested in accordance with AS 4586; and

(f) treads of solid construction (not mesh or other perforated material) if the stairway is more than 10 m high or connects more than 3 *storeys*; and

(g) in a Class 9b building, not more than 36 risers in consecutive *flights* without a change in direction of at least 30°; and

(h) in the case of a *required* stairway, no winders in lieu of a landing; and

(i) conspicuous edges to the treads of steps in a Class 9b building used as an *entertainment venue*; and

(j) in a Class 9b building used as an *entertainment venue*, not more than one helical stairway serving as a *required exit* and that stairway must—

(i) have a width of not less than 1500 mm; and

(ii) be of constant radius; and

(iii) be constructed so that each tread, when measured 500 mm in from its narrow end, has a width of at least 280 mm; and

(k) in a Class 9b building used as an *entertainment venue*, in a curved stairway serving as a *required exit* — an internal radius of not less than twice the width of the stair.

Delete D3D16 and insert NSW D3D16 as follows:

NSW D3D16 Thresholds

[2019: D2.15, NSW D2.15(d), (e)]

The threshold of a doorway must not incorporate a step or ramp at any point closer to the doorway than the width of the door leaf unless—

(a) in *patient care areas* in a Class 9a *health-care building*, the door sill is not more than 25 mm above the finished floor level to which the doorway opens; or

(b) in *resident use areas* in a Class 9c building, a ramp is provided with a maximum gradient of 1:8 for a maximum height of 25 mm over the threshold; or

(c) in a building *required* to be *accessible* by Part D4, the doorway—

(i) opens to a road or *open space*; and

(ii) is provided with a threshold ramp or step ramp in accordance with AS 1428.1; or

(d) in a Class 9b building used as an *entertainment venue*, the door sill of a doorway opening to a road, *open space*, external stair landing or external balcony is not more than 50 mm above the finished floor level to which the doorway opens; or

(e) in other cases—

(i) the doorway opens to a road or *open space*, external stair landing or external balcony; and

(ii) the door sill is not more than 190 mm above the finished surface of the ground, balcony, or the like, to which the doorway opens.

D3D18 Height of barriers

[2019: Table D2.16a]

Delete D3D18(1) and insert NSW D3D18(1) as follows:

(1) The height of a barrier *required* by D3D17 must be not less than the following:

(a) For stairways or ramps with a gradient of 1:20 or steeper — 865 mm.

(b) For *landings* to a stair or ramp where the barrier is provided along the inside edge of the *landing* and does not exceed 500 mm in length — 865 mm.

(c) In front of fixed seating on a *mezzanine* or balcony within an auditorium in a Class 9b building—

(i) 1 m; or

(ii) 700 mm where the horizontal projection extends not less than 1 m outwards from the top of the barrier; or

(iii) in a Class 9b building used as an *entertainment venue*, the height prescribed for guardrails in NSW I4D41 or NSW I5D9.

(d) In a Class 9b building used as an *entertainment venue*, for stairways and ramps and the floor of any access path, balcony, landing or the like—

(i) 1 m when provided inside the building; and

(ii) 1200 mm when provided externally to the building.

(e) For all other locations — 1 m.

D3D24 Doorways and doors

[2019: D2.19]

Delete D3D24(2) and insert NSW D3D24(2) as follows:

(2) A doorway serving as a *required exit* or forming part of a *required exit*, or a doorway in a *patient care area* of a Class 9a *health-care building*—

(a) must not be fitted with a revolving door; and

(b) must not be fitted with a roller shutter or tilt-up door unless—

(i) it serves a Class 6, 7 or 8 building or part with a *floor area* not more than 200 m^2; and

(ii) the doorway is the only *required exit* from the building or part; and

(iii) it is held in the open position while the building or part is lawfully occupied; and

(c) must not be fitted with a sliding door unless—

(i) it leads directly to a road or *open space*; and

(ii) the door is able to be opened manually under a force of not more than 110 N; and

(d) if fitted with a door which is power-operated—

(i) it must be able to be opened manually under a force of not more than 110 N if there is a malfunction or failure of the power source; and

(ii) if it leads directly to a road or *open space* it must open automatically if there is a power failure to the door or on the activation of a fire or smoke alarm anywhere in the *fire compartment* served by the door; and

(e) in a Class 9b building used as an *entertainment venue*—

(i) must not be fitted with a collapsible gate, accordion door, turnstile or rigid barrier; and

(ii) if fitted with a door, must be—

(A) a swing door which opens in the direction of egress; and

(B) doors hung in two folds where the unobstructed width of the doorway is more than 1 m; and

(iii) a doorway or opening within sight of the audience but not intended for egress must have a notice displayed clearly indicating its purpose and such a notice must not be internally illuminated; and

(iv) notwithstanding (2)(c), a sliding door may be fitted where—

(A) it leads directly to a road or *open space* and forms a main entrance; and

(B) it is capable of swinging in the direction of egress when pressure is applied to the inside face of the door; and

(C) the door is provided with signage that clearly indicates to persons seeking egress, the potential for swinging the door open in an emergency.

D3D26 Operation of latch

[2019: D2.21]

Delete D3D26(5) and insert NSW D3D26(5) as follows:

(5) The requirements of (1) and (2) do not apply in a Class 9b building (other than a *school*, an *early childhood centre* or a building used for religious purposes) to a door in a *required exit*, forming part of a *required exit* or in the path of travel to a *required exit* serving a *storey* or room accommodating more than 100 persons, determined in accordance with D2D18, in which case it must be readily openable—

(a) without a key from the side that faces a person seeking egress; and

(b) by a single hand pushing action on a single device such as a panic bar located between 900 mm and 1.2 m from the floor; and

(c) where a two-leaf door is fitted, the provisions of (a) and (b) need only apply to one door leaf if the appropriate requirements of D2D9 are satisfied by the opening of that one leaf; and

(d) where the door is a door in a path of travel providing re-entry to the building from a balcony, terrace or the like, it may be fitted with key-operated fastenings only, the tongues of which must be locked in the retracted position whenever the building is occupied by the public, so the door can yield to pressure.

Insert subclause NSW D3D26(6) in clause D3D26 as follows:

(6) The requirements of (1), (2) and (5) do not apply to a door serving a Class 9b building used as an *entertainment venue* where the following provisions apply to a door or gate used by the public—

(a) on a door, the single device operating the latch or bolts must be a panic bar if those doors are to be secured; or

(b) an *exit* door or gate used by the public as the main entrance may be fitted with key-operated fastenings only, the tongues of which must be locked in the retracted position whenever the building is occupied by the public so the door or gate can yield to pressure from within; or

(c) a door from a balcony, terrace or the like, being a door in a path of travel providing re-entry to the building, may comply with the locking provision of (b) above.

Insert NSW D3D31 as follows:

NSW D3D31 Doors in paths of travel to an entertainment venue

[2019: NSW D2.101]

In a Class 9b building used as an *entertainment venue*, a doorway in a path of travel must comply with NSW D3D24(2)(e).

Section E Services and equipment

Part E2 Smoke hazard management

Delete E2D10 and insert NSW E2D10 as follows:

NSW E2D10 Buildings not more than 25 m in effective height: large isolated buildings subject to C3D4

[2019: NSW Table E2.2a]

(1) In a Class 5, 6, 7, 8 or 9 building of not more than 25 m in *effective height*, and which exceeds 18 000 m^2 in *floor area* or 108 000 m^3 in *volume*, the building must be provided with—

(a) if the ceiling height of the *fire compartment* is not more than 12 m—

(i) an *automatic* smoke exhaust system in accordance with Specification 21; or

(ii) *automatic smoke-and-heat vents* in accordance with Specification 22; or

(b) if the ceiling height of the *fire compartment* is more than 12 m, an *automatic* smoke exhaust system in accordance with Specification 21.

(2) For the purposes of (1), reference to 'the building' being provided with specified measures, means to the nominated classes within the building.

Notes

(1) Refer to E2D14 and E2D15 for specific provisions applicable to a Class 6 building or part of a building (in a *fire compartment* having a *floor area* of more than 2000 m^2).

(2) Refer to NSW E2D16 to NSW E2D19 for specific provisions applicable to a Class 9b building or part of a building.

(3) Refer to E2D5 and E2D8 where a Class 5, 6, 7b, 8 and 9b building contains a Class 2, 3 or 4 part.

Delete E2D16 and insert NSW E2D16 as follows:

NSW E2D16 Class 9b – assembly buildings: all

[2019: NSW Table E2.2b]

The following provisions apply to all Class 9b *assembly buildings*:

(a) A building or part of a building used as an *assembly building* must be provided with *automatic* shutdown of any air-handling system (other than non-ducted individual room units with a capacity not more than 1000 L/s and miscellaneous exhaust air systems installed in accordance with Sections 5 and 6 of AS 1668.1) which does not form part of the smoke hazard management system, on the activation of—

(i) smoke detectors installed complying with S20C6; and

(ii) any other installed fire detection and alarm system, including a sprinkler system (other than a FPAA101D or FPAA101H system) complying with Specification 17.

(b) A basement not counted in the *rise in storeys* in accordance with C2D3, less than 2000 m^2 used as an *assembly building* or part of an *assembly building* containing an *auditorium* or other public area, must be equipped with—

(i) an *automatic* smoke detection system in accordance with Specification 20; or

(ii) an *automatic* zone pressurisation system in accordance with AS 1668.1 if the basement has more than one *fire compartment*; or if the basement forms part of a multi *fire compartmented* building served by the zone pressurisation system; or

(iii) a sprinkler system (other than a FPAA101D or FPAA101H system) complying with Specification 17.

(c) *Stages* and *backstages*:

(i) For the purposes of this clause, where a *stage* is separated from the *auditorium* by a proscenium wall incorporating a proscenium opening, a *backstage* room or area that is not separated from the *stage* by construction having an FRL of not less than 60/60/60, is taken to form part of the *stage*.

(ii) A building or part of a building used as an *assembly building* which has a *stage* with a floor area of more than 50 m^2 and not more than 150 m^2 must, over the *stage*, be provided with—

(A) an *automatic* smoke exhaust system complying with Specification 21 (including Figure S21C2); or

(B) roof mounted *automatic smoke-and-heat vents* complying with NSW I4D59, in a single *storey* building or the top *storey* of a multi *storey* building.

(iii) A building or part of a building used as an *assembly building* which has a stage with a floor area of more than 150 m^2 must, over the stage, be provided with an *automatic* smoke exhaust system complying with Specification 21 (including Figure S21C2).

(iv) A building or part of a building used as an *assembly building* which has a stage equipped with means of *flying scenery* must, over the *stage*, be provided with an *automatic* smoke exhaust system complying with Specification 21 (including Figure S21C2).

Explanatory Information

Smoke hazard management provisions for an *assembly building* used for multiple purposes must comply with all the relevant provisions of NSW E2D16, NSW E2D17, NSW E2D18 and NSW E2D19 according to usage.

Delete E2D17 and insert NSW E2D17 as follows:

NSW E2D17 Class 9b – assembly buildings: night clubs, discotheques and the like

[2019: NSW Table E2.2b]

A building or part of a building being a night club, discotheque or the like, must be provided with—

(a) in an auditorium—

(i) an *automatic* smoke exhaust system complying with Specification 21; or

(ii) roof mounted *automatic smoke-and-heat vents* complying with Specification 22, in a single *storey* building or the top *storey* of a multi *storey* building; or

(iii) a sprinkler system (other than a FPAA101D or FPAA101H system) complying with Specification 17 with fast response sprinkler heads; and

(b) in all other areas—

(i) where a building or part of a building has a *floor area* not more than 2000 m^2—

(A) one of the smoke hazard management measures listed under (a) above; or

(B) an *automatic* smoke detection and alarm system complying with Specification 20; or

(ii) where a building or part of a building has a *floor area* of more than 2000 m^2, smoke hazard management measures as provided for under NSW E2D19.

Notes

(1) Paragraph (a) applies only to an auditorium designed principally to accommodate an audience to an entertainment.

(2) Smoke hazard management provisions for an *assembly building* used for multiple purposes must comply with all the relevant provisions of NSW E2D16, NSW E2D17, NSW E2D18 and NSW E2D19 according to usage.

Delete E2D18 and insert NSW E2D18 as follows:

NSW E2D18 Class 9b – assembly buildings: exhibition halls, museums and art galleries

[2019: NSW Table E2.2b]

A building or part of a building used as an exhibition hall, museum, art gallery or the like, must be provided with—

(a) where the *floor area* is more than 2000 m^2 and not more than 3500 m^2—

(i) an *automatic* smoke exhaust system complying with Specification 21; or

(ii) roof mounted *automatic smoke-and-heat vents* complying with Specification 22 in a single *storey* building or the top *storey* of a multi *storey* building; or

(iii) a sprinkler system (other than a FPAA101D or FPAA101H system) complying with Specification 17; and

(b) where the *floor area* is more than 3500 m^2, a sprinkler system (other than a FPAA101D or FPAA101H system) complying with Specification 17 and—

(i) an *automatic* smoke exhaust system complying with Specification 21; or

(ii) roof mounted *automatic smoke-and-heat vents* complying with Specification 22 , in a single *storey* building or the top *storey* of a multi *storey* building.

Notes

Smoke hazard management provisions for an *assembly building* used for multiple purposes must comply with all the relevant provisions of NSW E2D16, NSW E2D17, NSW E2D18 and NSW E2D19 according to usage.

Delete E2D19 and insert NSW E2D19 as follows:

NSW E2D19 Class 9b – assembly buildings: other assembly buildings (not listed in NSW E2D16 to E2D18)

[2019: NSW Table E2.2b]

(1) Unless otherwise described in (2), in a building or part of a building used as an *assembly building* (not being a night club, discotheque or the like; or an exhibition hall, museum or art gallery) where the *floor area* of a *fire compartment* is more than 2000 m^2, the *fire compartment* must be provided with—

(a) an *automatic* smoke exhaust system complying with Specification 21; or

(b) roof mounted *automatic smoke-and-heat vents* complying with Specification 22, in a single *storey* building or the top *storey* of a multi *storey* building; or

(c) if the *floor area* of the *fire compartment* is not more than 5000 m^2 and the building has a *rise in storeys* of not more than 2—

(i) an *automatic* smoke detection and alarm system complying with Specification 20; or

(ii) a sprinkler system (other than a FPAA101D or FPAA101H system) complying with Specification 17.

(2) The following buildings are exempt from the provisions of (1):

(a) Sporting complexes, (including sports halls, gymnasiums, *swimming pools*, ice and roller rinks, and the like) other than indoor sports stadiums with total spectator seating for more than 1000 persons.

(b) Churches and other places used solely for religious worship.

(c) *School* classrooms.

(3) A building containing a Class 9b *early childhood centre* must be provided with an *automatic* smoke detection and alarm system complying with Specification 20 throughout the whole building, including any part of another Class.

Notes

Smoke hazard management provisions for an *assembly building* used for multiple purposes must comply with all the relevant provisions of NSW E2D16, NSW E2D17, NSW E2D18 and NSW E2D19 according to usage.

Delete E2D20 and insert NSW E2D20 as follows:

NSW E2D20 Class 9b assembly buildings: other assembly buildings (not listed in E2D16 to E2D19)

This clause has deliberately been left blank.

E2D20 does not apply in NSW. This clause is deleted from the BCA in NSW, as requirements for Class 9b – Assembly buildings in NSW are covered under NSW E2D16 to NSW E2D19.

Part E4 Visibility in an emergency, exit signs and warning systems

Delete E4D6 and insert NSW E4D6 as follows:

NSW E4D6 Direction signs

[2019: NSW E4.6]

If an *exit* is not readily apparent to persons occupying or visiting the building, then *exit* signs must be installed—

(a) in appropriate positions in corridors, hallways, lobbies, foyers, auditoria, and the like, indicating the direction to a *required exit*; and

(b) in a Class 9b building used as an *entertainment venue* — in any external egress path to a road where the *exit* does not open directly onto a road.

Specification 20 Smoke detection and alarm systems

Delete S20C8 and insert NSW S20C8 as follows:

NSW S20C8 System monitoring

[2019: NSW Spec E2.2a: 8]

The following installations must be connected to a fire alarm monitoring system connected to a fire station or fire station dispatch centre in accordance with AS 1670.3:

(a) A smoke detection system in a Class 3 building provided in accordance with S20C2(b)(i) or S20C2(b)(ii).

(b) A smoke detection system in a Class 9a *health-care building*, if the building accommodates more than 20 patients.

(c) A smoke detection system in a Class 9c building.

(d) Smoke detection in accordance with S20C6 provided to activate—

(i) a smoke exhaust system in accordance with Specification 21; or

(ii) *smoke-and-heat vents* in accordance with Specification 22.

Section F Health and amenity

Part F4 Sanitary and other facilities

Delete F4P6 and insert NSW F4P6 as follows:

NSW F4P6 Microbial control for water systems

This clause has deliberately been left blank.

F4P6 does not apply in NSW as the installation of hot water, warm water and cooling water systems (and their operation and maintenance) is regulated in the Public Health Regulation 2012, under the Public Health Act 2010.

F4D4 Facilities in Class 3 to 9 buildings

[2019: F2.3]

Delete Table F4D4d and insert NSW Table F4D4d as follows:

NSW Table F4D4d: Sanitary facilities in Class 6 buildings – restaurants, cafes, bars, small live music or arts venues

User group	Facility type	Design occupancy	Number
Male patrons	Closet pans	1 - 100	1
		101 - 300	2
		>300	Add 1 per 200
	Urinals	1 - 50	1
		51 - 100	2
		101 - 150	3
		151 - 200	4
		201 - 250	5
		>250	Add 1 per 100
	Washbasins	1 - 50	1
		51 - 200	2
		>200	Add 1 per 200
Female patrons	Closet pans	1 - 25	1
		26 - 50	2
		51 - 100	3
		101 - 150	4
		151 - 200	5
		201 - 250	6
		>250	Add 1 per 100
	Washbasins	1 - 50	1
		51 - 150	2
		>150	Add 1 per 200

Table Notes

(1) Sanitary facilities need not be provided for patrons if the total number of persons accommodated in the building is not more than 20.

(2) Sanitary facilities need not be provided for patrons in a *small live music or arts venue* that is not a *licensed premises*.

Delete F4D10 and insert NSW F4D10 as follows:

NSW F4D10 Microbial (legionella) control

This clause has deliberately been left blank.

F4D10 does not apply in NSW as the installation of hot water, warm water and cooling water systems (and their operation and maintenance) is regulated in the Public Health Regulation 2012, under the Public Health Act 2010.

Part F6 Light and ventilation

Delete F6D6 and insert NSW F6D6 as follows:

NSW F6D6 Ventilation of rooms

[2019: NSW F4.5(b)]

A *habitable room*, office, shop, factory, workroom, *sanitary compartment*, bathroom, shower room, laundry and any other room occupied by a person for any purpose must have—

(a) natural ventilation complying with F6D7; or

(b) a mechanical ventilation or air-conditioning system complying with AS 1668.2.

Notes

The reference to AS/NZS 3666.1 is deleted from the BCA in NSW, as the need to comply with this standard is regulated in the Public Health Regulation 2012, under the Public Health Act 2010.

Section G Ancillary provisions

Part G1 Minor structures and components

Delete G1P2 and insert NSW G1P2 as follows:

NSW G1P2 Swimming pool access and water recirculation systems

[2019: NSW GP1.2]

(1) A barrier must be provided to a *swimming pool* and must—

(a) be continuous for the full extent of the hazard; and

(b) be of a strength and rigidity to withstand the foreseeable impact of people; and

(c) restrict the access of young children to the pool and the immediate pool surrounds; and

(d) have any gates and doors fitted with latching devices not readily operated by young children, and constructed to automatically close and latch.

(2) A *swimming pool* water recirculation system must incorporate safety measures to avoid entrapment of, or injury to, a person.

Applications

(1) NSW G1P2(1) only applies to a *swimming pool* with a depth of water more than 300 mm, in conjunction with the Swimming Pools Act 1992 and the Swimming Pools Regulation 2018.

(2) NSW G1P2(2) only applies to a *swimming pool* with a depth of water more than 300 mm.

Delete G1D2 and insert NSW G1D2 as follows:

NSW G1D2 Swimming pools

[2019: NSW G1.1]

(1) NSW G1D2(2) applies to the technical construction requirements for barriers to restrict access to *swimming pools*, subject to—

(a) out-of-ground pool walls and the walls of above ground pools, including inflatable pools, not being considered to be effective barriers; and

(b) the reference in clause 2.3.1 of AS 1926.1 to a barrier within a property including a boundary barrier.

(2) A *swimming pool* with a depth of water more than 300 mm and which is associated with a Class 2 or 3 building or Class 4 part of a building, must have suitable barriers to restrict access by young children to the immediate pool surrounds in accordance with—

(a) AS 1926.1 and AS 1926.2; or

(b) if the *swimming pool* is a *spa pool*—

(i) the requirements of (a); or

(ii) clause 9 of the Swimming Pools Regulation 2018.

(3) A water recirculation system in a *swimming pool* with a depth of water more than 300 mm must comply with AS 1926.3.

Notes

The Swimming Pools Act 1992 and the Swimming Pools Regulation 2018, applicable to *swimming pool* with a depth of water of more than 300 mm, regulate the circumstances in which a barrier is required and prevail in the case of any inconsistency.

Insert NSW G1D5 as follows:

NSW G1D5 Provision for cleaning windows

[2019: NSW G1.101]

(1) A building must provide for a safe manner of cleaning any *windows* located 3 or more *storeys* above ground level.

(2) A building satisfies (1) where—

(a) the *windows* can be cleaned wholly from within the building; or

(b) provision is made for the cleaning of the *windows* by a method complying with the Work Health and Safety Act 2011 and regulations made under that Act.

Part G5 Construction in bushfire prone areas

Delete G5P1 and insert NSW G5P1 as follows:

NSW G5P1 Bushfire resistance

[2019: NSW GP5.1]

A building that is constructed in a *designated bushfire prone area* must be designed and constructed to—

(a) reduce the risk of ignition from a *design bushfire* with an annual exceedance probability not more than 1:100 years, or 1:200 years for a Class 9 building; and

(b) take account of the assessed duration and intensity of the *fire actions* of the *design bushfire*; and

(c) prevent internal ignition of the building and its contents; and

(d) maintain the structural integrity of the building for the duration of the *design bushfire*.

Applications

NSW G5P1 only applies in a *designated bushfire prone area* to—

(a) a Class 2 or 3 building; or

(b) a Class 4 part of a building; or

(c) a Class 9 building that is a *special fire protection purpose*; or

(d) a Class 10a building or deck immediately adjacent or connected to a building or part of a type listed in (a), (b) or (c).

Delete G5P2 and insert NSW G5P2 as follows:

NSW G5P2 Additional bushfire requirements for Class 9 buildings that are a special fire protection purpose

[New for 2022]

A building that is constructed in a *designated bushfire prone area* and occupied by people who may be unable to readily evacuate the building prior to a bushfire must, to the degree necessary—

(a) reduce the risk of an untenable indoor environment for occupants during a bushfire event, appropriate to the—

(i) location of the building relative to fire hazards, including—

(A) classified vegetation; and

(B) adjacent buildings, structures and movable objects; and

(C) carparking areas and allotment boundaries; and

(D) other *combustible* materials; and

(ii) number of occupants to be accommodated within the building; and

(iii) intensity of bushfire attack on the building; and

(iv) duration of occupancy; and

(v) intensity of potential consequential fires; and

(vi) occupant tenability within the building before, during and after the bushfire event; and

(vii) combined effects of structural, fire exposure and other effects to which the building may reasonably be subjected; and

(viii) provision of fire fighting equipment and water supply to facilitate protection of the building; and

(b) be provided with vehicular access to the *site* to enable firefighting and emergency personnel to defend or evacuate the building; and

(c) have access to a sufficient supply of water for firefighting purposes on the *site*; and

(d) provide safe access within the *site* to the building (including carparking areas), as well as safe egress after the bushfire event.

Applications

NSW G5P2 applies to a Class 9 building that is a *special fire protection purpose* located in a *designated bushfire prone area*.

Notes

NSW G5P2 does not guarantee the safety of building occupants or the maintenance of tenable conditions within a building during a bushfire event.

Delete G5D2 and insert NSW G5D2 as follows:

NSW G5D2 Application of Part

[2019: NSW G5.1]

The *Deemed-to-Satisfy Provisions* of this Part apply in a *designated bushfire prone area* to—

(a) a Class 2 or 3 building; or

(b) a Class 4 part of a building; or

(c) a Class 9 building that is a *special fire protection purpose* located in an area subject to a Bushfire Attack Level (BAL) not exceeding BAL—12.5, determined in accordance with *Planning for Bush Fire Protection*; or

(d) a Class 10a building or deck immediately adjacent or connected to a building or part of a type in (a), (b) or (c).

Notes

(1) If a building of a type listed in (c) or (d) where associated with a building listed in (c) is subject to a BAL exceeding BAL—12.5, the building would need to comply with *Performance Requirement* NSW G5P2 by means of a *Performance Solution*.

(2) There are no *Deemed-to-Satisfy Provisions* for these buildings.

Delete G5D3 and insert NSW G5D3 as follows:

NSW G5D3 Protection

[2019: NSW G5.2]

In a *designated bushfire prone area*, a Class 2 building, a Class 3 building, a Class 4 part of a building or a Class 10a building or deck immediately adjacent or connected to such a building or part, must comply with the following—

(a) AS 3959 except—

(i) as amended by *Planning for Bush Fire Protection*; and

(ii) for Section 9 Construction for Bushfire Attack Level FZ (BAL-FZ), buildings subject to BAL-FZ must comply with specific conditions of *development consent* for construction at this level; or

(b) the requirements of (a) above as modified by the *development consent* following consultation with the NSW Rural Fire Service under section 4.14 of the Environmental Planning and Assessment Act 1979 if required; or

(c) the requirements of (a) above as modified by *development consent* with a bushfire safety authority issued under section 100B of the Rural Fires Act 1997 for the purposes of integrated development.

Delete G5D4 and insert NSW G5D4 as follows:

NSW G5D4 Protection – Class 9 buildings used as a special fire protection purpose

[New for 2022]

In a *designated bushfire prone area*, a Class 9 building that is a *special fire protection purpose* or a Class 10a building or deck immediately adjacent or connected to a such a building or part, must comply with—

(a) for a Class 9 building that is *special fire protection purpose*, Specification 43 except as amended by *Planning for Bush Fire Protection*; or

(b) for a Class 10a building or deck immediately adjacent or connected to a Class 9 building that is a *special fire protection purpose*—

(i) AS 3959 except as amended by *Planning for Bush Fire Protection*; and

(ii) S43C13; or

(c) the requirements of (a) or (b) above as modified by the *development consent* with a bushfire safety authority issued under section 100B of the Rural Fires Act 1997 for the purposes of integrated development.

NSW Part G7 Livable housing design

This Part has deliberately been left blank. Part G7 does not apply in NSW as livable housing design requirements do not apply to sole-occupancy units in a Class 2 building in NSW.

Specification 43 Bushfire protection for certain Class 9 buildings

Delete S43C2 and insert NSW S43C2 as follows:

NSW S43C2 Separation from classified vegetation

This clause has deliberately been left blank.

S43C2 does not apply in NSW as Asset Protection Zones must be determined in accordance with Planning for Bush Fire Protection.

Delete S43C11 and insert NSW S43C11 as follows:

NSW S43C11 Supply of water for fire-fighting purposes

[New for 2022]

Water for fire-fighting purposes must be available and consist of—

(a) A fire hydrant system complying with E1D2; or

(b) A static water supply consisting of tanks, *swimming pools*, dams or the like, or a combination of these, together with suitable pumps, hoses and fittings, determined in consultation with the relevant *fire brigade* that—

(i) is capable of providing the required flow rate for a period of not less than 4 hours; or

(ii) has a volume of 10 000 litres for each occupied building.

Section I Special use buildings

Part I1 Class 9b buildings

Delete I1D1 and insert NSW I1D1 as follows:

NSW I1D1 Application of Part

[2019: NSW H1.1]

(1) For a Class 9b building or part of a building that is not an *entertainment venue*—

(a) the *Deemed-to-Satisfy Provisions* of Part I1 apply to every enclosed Class 9b building or part of a building which—

(i) is a *school* assembly, church or community hall with a *stage* and any *backstage* area with a total *floor area* of more than 300 m^2; or

(ii) otherwise, has a *stage* and any *backstage* area with a total *floor area* of more than 200 m^2; or

(iii) has a *stage* with an associated rigging loft; and

(b) notwithstanding (1)(a)—

(i) I1D4 applies to every open or enclosed Class 9b building; and

(ii) I1D7 applies to every enclosed Class 9b building.

(2) For a Class 9b building that is an *entertainment venue*, NSW Part I4 applies in replacement of Part I1.

NSW Part I4 Entertainment venues other than temporary structures and drive-in theatres

Introduction to this Part

NSW Part I4 contains *Deemed-to-Satisfy Provisions* additional to those contained in Sections C, D, E, F and G for buildings containing or used as an *entertainment venue* other than temporary structures and drive-in theatres.

Deemed-to-Satisfy Provisions

NSW I4D1 Application of Part

[2019: NSW H101.1]

This Part applies to every *entertainment venue* as described in the Environmental Planning and Assessment Regulation 2021.

NSW I4D2 Fire separation

[2019: NSW H101.2]

If an *entertainment venue* forms part only of a building, then—

(a) the whole of the *entertainment venue*; or

(b) the part containing the *stage*, *backstage* area and *auditorium*,

must be separated from the other parts of the building by construction having an FRL of not less than 60/60/60.

NSW I4D3 Foyer space

[2019: NSW H101.3]

Where an *entertainment venue* is used principally for the purpose of—

(a) exhibiting *films*; or

(b) conducting live *stage* productions,

foyer space (excluding stairways and concession areas) must be provided on the basis of at least 0.25 m^2 for each person that the *auditorium* accommodates.

NSW I4D4 Sprinkler systems for common foyers

[2019: NSW H101.4]

In an *entertainment venue*, where multiple *auditoriums* have a foyer in common, the following applies:

(a) If the foyer serves not more than 2 *auditoriums*, that foyer must be separated from any adjoining foyer by construction having an FRL of not less than 60/60/60.

(b) If the foyer serves more than 2 *auditoriums*, a sprinkler system (other than a FPAA101D or FPAA101H system) complying with Specification 17 must be installed—

(i) throughout the *storey* containing the foyer; and

(ii) throughout each *storey* in the building below that *storey*.

NSW I4D5 Conventional stages: application

[2019: NSW H101.5]

NSW I4D6 to NSW I4D9 apply to a conventional *stage*, that is, a *stage* which is separated from the *auditorium* by a proscenium wall incorporating a proscenium opening.

NSW I4D6 Conventional stages: extent of stage area

[2019: NSW H101.5.1]

If a room or area is not separated from the remainder of a conventional *stage* by construction having an FRL of not less than 60/60/60, the room or area is, for the purposes of this Part, to be taken to form part of the *stage*.

NSW I4D7 Conventional stages: small stages

[2019: NSW H101.5.2]

A *stage* which is more than 50 m^2 but not more than 150 m^2 in area must have 2 or more means of egress from the *stage* and *backstage* area provided otherwise than through the proscenium wall.

NSW I4D8 Conventional stages: large stages

[2019: NSW H101.5.3]

A *stage* which is more than 150 m^2 in area—

(a) must have installed directly above the *stage* a suitable sprinkler system (other than a FPAA101D or FPAA101H system) complying with Specification 17; and

(b) must have the proscenium opening protected by a safety curtain that complies with NSW I4D15 and NSW I4D16; and

(c) must have a line of open drenchers or open sprinklers provided above the proscenium opening on the *stage* side and in such a position as to be able to discharge over the inside face of the safety curtain; and

(d) must have 2 or more means of egress from the *stage* and *backstage* area provided otherwise than through the proscenium wall.

NSW I4D9 Conventional stages: fire separation of stages

[2019: NSW H101.5.4]

A *stage* which is more than 50 m^2 in area, and all areas below such a *stage*, must (with the exception of the proscenium opening) be separated from the *backstage* and the remainder of the building by construction having an FRL of not less than 60/60/60.

NSW I4D10 Non-conventional stages: application

[2019: NSW H101.6]

NSW I4D11 and NSW I4D12 apply to a *stage* that is not a conventional *stage* within the meaning of NSW I4D5.

NSW I4D11 Non-conventional stages: small stages

[2019: NSW H101.6.1]

A *stage* which is more than 50 m^2 but not more than 150 m^2 in area must have at least 2 means of egress from the *backstage* area.

NSW I4D12 Non-conventional stages: large stages

[2019: NSW H101.6.2]

A *stage* which is more than 150 m^2 in area must have at least 2 means of egress from the *backstage* area.

NSW I4D13 Flying scenery

[2019: NSW H101.7]

(1) Where there is a *grid* or other means of *flying scenery* over a conventional *stage* or non-conventional *stage*—

(a) the *stage* must be provided with a sprinkler system (other than a FPAA101D or FPAA101H system) complying with Specification 17; and

(b) a fly gallery, bridge *grid*, rigging loft, tie gallery or electric light perch must—

(i) comply with AS 1657; and

(ii) be of *non-combustible* construction; and

(c) a fly gallery must be provided with at least 2 means of egress, one on each side of the *stage*; and

(d) a *grid* or rigging loft must be provided with at least 2 means of egress; and

(e) if exposed steel is used in the construction of a roof, fly or tie gallery, the roof, fly or tie gallery must be so designed that, in the event of its structural failure due to fire, the wall structure of the building will not be affected; and

(f) structural steel supporting the *stage* tower must be enclosed by masonry or concrete and have an FRL of not less than 120/120/120.

(2) In addition to (1), in the case of a conventional *stage*, the following additional requirements apply:

(a) The proscenium wall must—

(i) have an FRL of not less than 120/120/120; and

(ii) have the proscenium opening protected by a rigid safety curtain in accordance with NSW I4D16.

(b) The walls forming the *stage* area, and the area beneath the *stage*, must be constructed of masonry or concrete and have an FRL of not less than 120/120/120.

NSW I4D14 Load notice

[2019: NSW H101.8]

(1) A notice indicating the actual distributed and concentrated load for which the *stage* floor has been designed must be conspicuously and permanently displayed in a position adjacent to the *stage* floor.

(2) The notice must be in legible letters and figures—

(a) at least 50 mm high; and

(b) on a contrasting background.

NSW I4D15 Safety curtains

[2019: NSW H101.10]

A safety curtain *required* by NSW I4D8 must—

(a) be made of *non-combustible* material; and

(b) be so fitted that, when it is closed, it forms an efficient smoke seal between the *stage* and the *auditorium*; and

(c) be capable of withstanding a pressure differential of 0.5 kPa over its entire surface area; and

(d) be run on steel guides located on each side of the proscenium opening; and

(e) remain engaged in its guides if the guides, together with their fittings and attachments and that part of the curtain engaged in the guides, are subjected to a pressure differential of 1 kPa; and

(f) be of sufficiently robust construction to withstand damage by scenery, *stage* properties and falling debris; and

(g) be capable of closing the proscenium opening within 30 seconds, either by gravity slide or by motor assisted mechanisms; and

(h) have manual controls, located on each side of the *stage*, for the closing of the curtains; and

(i) have a notice displayed adjacent to the operating controls, in clear and legible letters and symbols of adequate size, indicating its use and operation; and

(j) when operated, actuate a distinctive warning alarm audible to persons on the *stage* and must not be reliant for its operation solely on the primary electricity supply; and

(k) have the words “Safety Curtain” exhibited on the curtain in clear and legible letters of adequate size to enable them to be read from all parts of the *auditorium*.

NSW I4D16 Safety curtains — additional requirements

[2019: NSW H101.10.1]

A rigid safety curtain *required* by NSW I4D13 must comply with the requirements of NSW I4D15 and it must—

(a) be vertically hung from steel cables; and

(b) be framed with structural steel that complies with AS 4100; and

(c) be sheeted and finished on both sides with sheet steel or other *non-combustible* material of such gauge, and so fastened to its frame, as to ensure that its frame is capable of withstanding distortion arising from heat; and

(d) when closed, overlap the proscenium opening by not less than 300 mm at each side and by not less than 600 mm at the top.

NSW I4D17 Seating in rows: application

[2019: NSW H101.11]

NSW I4D18 to NSW I4D25 do not apply to *continental seating* or seating at tables.

NSW I4D18 Seating in rows: number of seats

[2019: NSW H101.11.1]

Subject to NSW I4D22, where seating is arranged in *rows*, the maximum number of seats in each *row* must not exceed—

(a) 8 where there is an *aisle* at one end only of the *row*; or

(b) 16 where there are *aisles* on both ends of the *row*.

NSW I4D19 Seating in rows: chairs used for seating

[2019: NSW H101.11.2]

Chairs used for seating must—

(a) where they have arms, be at least 500 mm from centre to centre; and

(b) where they do not have arms, be at least 450 mm from centre to centre; and

(c) have a *minimum lateral clearance* of at least 300 mm between—

(i) the front of each chair and the back of the chair in front; or

(ii) if a guardrail is provided in front of the chairs, between the front of each chair and the guardrail; and

(d) have a distance of at least 950 mm between the back of the chair and the back of the chair in front.

NSW I4D20 Seating in rows: chairs in auditoriums — level floors

[2019: NSW H101.11.3]

Chairs in an *auditorium* that has a level floor must be—

(a) securely fastened to the floor; or

(b) secured together in groups of not less than 4 and not more than 16.

NSW I4D21 Seating in rows: chairs in auditoriums — sloping floors

[2019: NSW H101.11.4]

Chairs in an *auditorium* having a sloping floor, or having stepped or inclined platforms, must be securely fastened to the floor or platform.

NSW I4D22 Seating in rows: radiating aisles in seating areas

[2019: NSW H101.11.5]

Where seating is securely fastened to the floor and arranged in *rows* of concentric circles, semi-circles or segments of circles, with radiating *aisles*—

(a) the number of seats in each *row* between 2 *aisles* must not exceed 24; and

(b) each seat must—

(i) have a *minimum lateral clearance* of at least 325 mm between the front of the seat and the back of the seat in front; and

(ii) have a distance of at least 975 mm between the back of the seat and the back of the seat in front; and

(c) the *rows* may be curved or straight.

NSW I4D23 Seating in rows: aisles and cross-overs

[2019: NSW H101.11.6]

Where *aisles* and *cross-overs* are provided—

(a) each *aisle* must have a width of at least 1000 mm and each *cross-over* must have a width of at least 1500 mm; and

(b) the floor of each *aisle* must not have a grade of more than 1 in 8 at any part; and

(c) if there is a step from a *row* to an *aisle* or from a landing to an *aisle*, the step must not project into the *aisle*.

NSW I4D24 Seating in rows: platforms and steps

[2019: NSW H101.11.7]

Where an *aisle* contains platforms or steps—

(a) the platforms and steps must extend for the full width of the *aisle*; and

(b) if there are no intervening steps between levels of platforms, the height of the platform riser must not be more than 200 mm; and

(c) if there are one or more intervening steps between the levels of platforms—

(i) each riser must be at least 100 mm but not more than 200 mm high; and

(ii) each going must be at least 250 mm deep; and

(iii) risers and goings must be uniform; and

(d) goings which are more than 450 mm deep at platform level must have a grade of not more than 1 in 50; and

(e) at the entrance from the *aisle* to each *row* there must be a clear level floor space, extending the full width of the *aisle*, of at least 300 mm, measured from the back of the *row* in front; and

(f) any going projecting in front of a seat adjacent to an *aisle* must be protected by a guardrail.

NSW I4D25 Seating in rows: stepped platforms

[2019: H101.11.8]

Where stepped platforms without chairs or stepped platforms with bench seats, are used for seating—

(a) each platform must be at least 700 mm deep; and

(b) each seating space must be at least 450 mm wide, measured along the front of the platform or bench seat; and

(c) each seating space must be numbered consecutively; and

(d) at the entrance from the *aisle* to each *row* there must be a clear level floor space, extending the full width of the *aisle*, of at least 300 mm, measured from the back of the *row* in front; and

(e) any going projecting in front of a seat adjacent to an *aisle* must be protected by a guardrail; and

(f) in the case of stepped platforms with bench seats, there must be at least 300 mm between the back of each seat and the front of the platform behind, or the front of the bench seat behind, whichever is the closer.

NSW I4D26 Continental seating: application

[2019: NSW H101.12]

NSW I4D27 to NSW I4D35 apply to *continental seating*.

NSW I4D27 Continental seating: seating to be fastened

[2019: NSW H101.12.1]

Seating must be securely fastened to the floor.

NSW I4D28 Continental seating: maximum seats per row

[2019: NSW H101.12.2]

The number of seats in a *row* must not exceed 120.

NSW I4D29 Continental seating: depth of seating

[2019: NSW H101.12.3]

The depth of each *row* of seating (that is, the distance between the back of the *row* in front or, if there is a guardrail in front, between the back of the *row* and the guardrail) must, in respect of a *row* containing a number of seats specified in Column 1 of NSW Table I4D29, be not less than the distance specified in Column 2 of that Table in respect of that number of seats.

Insert NSW Table I4D29 as follows:

NSW Table I4D29: Spacing of auditorium seating

Column 1: number of seats in *rows*	Column 2: depth of *rows* (mm)	Column 3: clearance between *rows* (mm)
Not exceeding 16	950	300
17 - 30	975	325
31 - 45	1000	350
46 - 60	1025	375
61 - 75	1050	400
76 - 90	1075	425
91 - 105	1100	450
106 - 120	1125	475

NSW I4D30 Continental seating: clearance between rows

[2019: NSW H101.12.4]

The *minimum lateral clearance* between each *row* of seating must, in respect of a *row* containing a number of seats specified in Column 1 of NSW Table I4D29 be not less than the clearance specified in Column 3 of that Table in respect of that number of seats.

NSW I4D31 Continental seating: chairs used for seating

[2019: NSW H101.12.5]

Chairs used for seating must comply with NSW I4D19(a) and (b).

NSW I4D32 Continental seating: egress doorways

[2019: NSW H101.12.6]

Egress doorways through the walls of the *auditorium*—

(a) must have an aggregate width of at least twice the sum of the clearances specified in Column 3 of NSW Table I4D29 for each *row* of the *auditorium* to be served by those doorways; and

(b) must be provided at each end of every fifth *row*, excluding the first 2 *rows* and the last 2 *rows* in the *auditorium* if those *rows* each contain no more than 16 seats; and

(c) must lead—

(i) directly to a road or *open space*; or

(ii) into a foyer or other area giving access to a road or *open space*; and

(d) must be provided with *exit* signs if the egress doorways are not sufficiently conspicuous.

NSW I4D33 Continental seating: clear areas

[2019: NSW H101.12.7]

A clear area—

(a) must be provided from each end of each *row* to an egress doorway in the wall of the *auditorium*; and

(b) must have a width of at least the greater of—

(i) the sum of the clearances specified in Column 3 of NSW Table I4D29 for each *row*; or

(ii) 500 mm; and

(c) if it contains platforms or steps, must comply with NSW I4D24(a), (b), (c), (d) and (f).

NSW I4D34 Continental seating: minimum clear space

[2019: NSW H101.12.8]

At the entrance from a *row* to a clear area, there must be a clear level floor space having a width of at least the clearance specified for the *row* in Column 3 of NSW Table I4D29.

NSW I4D35 Continental seating: doors

[2019: NSW H101.12.9]

A door fitted to the egress doorway in the wall of an *auditorium* must comply with NSW D3D16 and NSW D3D24(2).

NSW I4D36 Provision of guardrails: location

[2019: NSW H101.13.1]

Guardrails must be provided—

(a) along the fascia of each balcony or box; and

(b) if there is a stepped floor, along the front edge of each *cross-over*; and

(c) where NSW I4D37 and NSW I4D38 apply.

NSW I4D37 Provision of guardrails: fixed back seats

[2019: NSW H101.13.2]

If seats with fixed backs are provided, guardrails that extend for the full width of the seating, must be provided at least 500 mm above the platform unless—

(a) fixed back seats of the next lower level project at least 500 mm above the level of the stepped platform; and

(b) there is only one riser between the platform and next lower *cross-over*.

NSW I4D38 Provision of guardrails: steps between platforms

[2019: NSW H101.13.3]

If—

(a) there is more than one intervening step in an *aisle* between levels of platforms, a guardrail must be provided (at a vertical height of at least 660 mm measured above the nosing of each tread and of the upper platform) to the sides of the *aisle* adjacent to those steps; and

(b) there is more than one intervening step in an *aisle* between levels of platforms, and that *aisle* is along a wall, a continuous guardrail must be affixed to that wall at a height of at least 865 mm above the nosing of each tread; and

(c) the end of the platform or the back of the highest platform does not abut a wall that extends at least 660 mm above the floor level of the platform, a guardrail not less than 660 mm high must be provided—

(i) at the ends of the platform, extending from the front of the first riser to the back of the highest platform; and

(ii) at the back of the highest platform, extending the full width of the platform; and

(d) there is an inclined floor, the raised section of which is not bounded by walls at least 660 mm high, a guardrail must be provided that extends around the perimeter of the raised section at a height of at least 660 mm above the inclined floor level; and

(e) seating at tables is provided on a stepped platform, a guardrail at least 500 mm high must be provided along the front edge of the platform.

NSW I4D39 Guardrails for seating areas: application

[2019: NSW H101.14]

NSW I4D40 to NSW I4D42 apply to seating areas.

NSW I4D40 Guardrails for seating areas: continental seating

[2019: NSW H101.14.1]

Where a guardrail is provided in front of a *row* of chairs—

(a) the distance between the back of each chair in that *row*, and the guardrail must be not less than the distance specified in Column 2 of NSW Table I4D29 for the number of chairs in that *row*; and

(b) the *minimum lateral clearance* between the front of each chair in that *row* and the guardrail must be not less than the clearance specified in Column 3 of NSW Table I4D29 for the number of chairs in that *row*.

NSW I4D41 Guardrails for seating areas: balconies and boxes

[2019: NSW H101.14.2]

A guardrail provided along the fascia of a balcony or box—

(a) if it is located at the foot of a stepped *aisle*, must have its top surface at least 900 mm above the floor of the balcony or box; and

(b) if it is not located at the foot of a stepped *aisle*, must have its top surface at least 750 mm above the floor; and

(c) if it has a ledge more than 70 mm wide, must have the top surface of the ledge sloping downwards towards the floor of the balcony or box at an angle of at least 30 degrees from the horizontal; and

(d) must have an unperforated kerb or toe guard extending for at least 300 mm above the floor.

NSW I4D42 Guardrails for seating areas: cross-overs

[2019: NSW H101.14.3]

A guardrail provided along the front edge of a *cross-over* on a stepped floor—

(a) must be at least 750 mm high; and

(b) must extend the full distance between *aisles*, or between a wall and an *aisle*, or for such other distance as considered necessary.

NSW I4D43 Dressing rooms

[2019: NSW H101.15]

A dressing room or two or more adjoining dressing rooms, having a total *floor area* of more than 50 m^2, must—

(a) be separated from other parts of the building by construction having an FRL of not less than 60/60/60; and

(b) have at least 2 means of egress as remote from each other as possible, one of which must discharge—

(i) directly to a road or *open space*; or

(ii) through a fire-isolated *exit* to a road or *open space*.

NSW I4D44 Storerooms

[2019: NSW H101.16]

A storeroom must be separated from other parts of the building by construction having an FRL of not less than 60/60/60.

NSW I4D45 Projection suites: Application

[2019: NSW H101.17]

(1) NSW I4D45 to NSW I4D48 apply to *projection suites*.

(2) A *projection suite* must be provided in an *entertainment venue* intended to be used for the showing of *films*.

NSW I4D46 Projection suites: rooms to be provided

[2019: NSW H101.17.1]

A *projection suite* in accordance with the staffing requirements of Schedule 72 of the Environmental Planning and Assessment Regulation 2021 must contain either—

(a) a projection room and sanitary accommodation comprising at least 1 closet pan and 1 washbasin, where the *projection suite* is continually staffed; or

(b) a projection room fitted with the following equipment—

(i) an *automatic* fire suppression system in accordance with SSL Appraisal Specification FAS 102 or a sprinkler system complying with AS 2118; and

(ii) a smoke detection system which will—

(A) comply with AS 1670.1; and

(B) be connected to a fire station or other approved monitoring service where arrangements are in place to initiate *fire brigade* response; and

(C) close down all shutters fitted to projection or observation ports; and

(D) activate sufficient general lighting to provide a minimum of 40 lux measured at floor level in any *auditorium* affected; and

(E) operate a public address system to automatically announce a suitable message from the management of the premises; and

(F) activate an audible alarm to immediately indicate to management the presence of smoke in the projection room.

NSW I4D47 Projection suites: fire separation

[2019: NSW H101.17.2]

A *projection suite* must be separated from all other internal parts of the building in which it is located by construction having an FRL of not less than 60/60/60.

NSW I4D48 Projection suites: concession for protection of some openings

[2019: NSW H101.17.3]

If a projection or observation port is not more than 0.1 m^2 in area—

(a) a metal shutter not less than 1.5 mm thick may be fitted thereto instead of the protection *required* under NSW C4D12; and

(b) any metal shutter or protection system must be equipped with a device to permit the closing of the shutter or the protection system from easily accessible operating positions adjacent to each egress doorway from the projection room.

NSW I4D49 Basement storeys

[2019: NSW H101.18]

Where an *entertainment venue* includes not more than 2 basement *storeys*—

(a) all *required exits* from the basement must be enclosed in *non-combustible* construction, with the exception of the main entry or *exit*; and

(b) any *auditorium* and other public areas in the basement must be equipped with an air-handling system that complies with AS 1668.2.

NSW I4D50 Basement storeys: more than two

[2019: NSW H101.18.1]

If the *entertainment venue* includes more than 2 basement *storeys*—

(a) the construction must be of at least Type B; and

(b) all *required exits* from the basement must be enclosed in a *fire-resisting shaft* having an FRL as *required* by the relevant Type of construction; and

(c) the building must be equipped with a sprinkler system (other than a FPAA101D or FPAA101H system) complying with Specification 17.

NSW I4D51 Electric mains installation: main switchboard

[2019: NSW H101.19.1]

The switchboard containing the main isolation switch must—

(a) be located in a position that is readily accessible to authorised persons, and to the *fire brigade* in the case of an emergency; and

(b) be enclosed by construction having an FRL of not less than 60/60/60.

NSW I4D52 Electric mains installation: circuit protection

[2019: NSW H101.19.2]

Protection of the final sub-circuit originating at a switchboard or distribution board must be by means of circuit breakers.

NSW I4D53 Electric mains installation: separate sub-mains

[2019: NSW H101.19.3]

Where an *entertainment venue* has its mains supply in common with that of another building or where it is a part of a building—

(a) the *entertainment venue* must be served by a separate and independent sub-main from the main switchboard; and

(b) each sub-main, the consumer's main and the supply authority's conductors within the building must be protected against fire by means of—

(i) mineral-insulated metal-sheathed cables or other cables that provide at least 2 hours' fire protection; or

(ii) heavy-duty PVC conduit or metallic pipe, concrete encased in walls or slabs with a minimum of 50 mm cover; or

(iii) heavy-duty PVC conduit or metallic pipe, buried at least 500 mm below ground level, for underground cabling.

NSW I4D54 Lighting: lighting switches

[2019: NSW H101.20.1]

(1) Any switch controlling the lighting system must not be accessible.

(2) Where, during normal use, general lighting may be dimmed or switched off, an override switch to switch on all of the general lighting instantaneously must be installed in the *auditorium* in a position accessible to management.

NSW I4D55 Lighting: lighting levels

[2019: NSW H101.20.2]

Where the lamps utilised in the general lighting are of a type that will not relight immediately after the restoration of the primary electricity supply to those lamps—

(a) a time delay or other suitable means must be provided to maintain the emergency lighting for a period not less than that necessary to allow the general lighting lamps to restrike; or

(b) lamps of a type that will provide immediate lighting must be installed and—

(i) arranged in such a manner as to ensure visual conditions not inferior to those *required* to be provided by the emergency lighting; and

(ii) capable of being switched in common with the general lighting and of being controlled also by the override switch *required* by NSW I4D54(2).

NSW I4D56 Lighting: provision of aisle lighting

[2019: NSW H101.20.3]

Where general lighting is to be either dimmed or extinguished when the public is in attendance and where the floor is stepped or at an inclination greater than 1 in 12, *aisle* lights must be provided to illuminate the length of each *aisle* and the tread of each step therein.

NSW I4D57 Lighting: aisle lighting power supply

[2019: NSW H101.20.4]

Where an *aisle* light is installed in a seat frame, it must be supplied at a voltage of not more than 32 volts AC or 115 volts DC.

NSW I4D58 Lighting: aisle lighting alternative lighting supply

[2019: NSW H101.20.5]

Aisle lighting must be provided with an alternative electricity supply that—

(a) is capable of being *automatically* energised in the event of failure of the primary lighting electricity supply; and

(b) complies with the provisions applying to emergency lighting.

NSW I4D59 Automatic smoke-and-heat vents for stages

[2019: NSW H101.22]

An *automatic smoke-and-heat vent* system *required* by NSW E2D16(c) for *stages* and *backstages* must—

(a) be capable of *automatic* operation by the inclusion of a heat sensing device designed to activate the system at a temperature of not more than 71°C; and

(b) be capable of being released manually from positions at either side of the *stage* and of being fully activated from either position; and

(c) have a notice, prominently displayed at each position referred to in (b), clearly indicating the method of activation; and

(d) have an openable area of not less than 10 percent of the total area of the *stage*.

NSW I4D60 Solid fuel burning stoves and open fire places

[2019: NSW H101.23]

Solid fuel burning stoves and open fire places must not be installed in premises designed for the purpose of—

(a) exhibiting *films*; or

(b) conducting live theatre productions.

NSW I4D61 Fuel gas cylinders: general

[2019: NSW H101.24.1]

Fuel gas cylinders must—

(a) be housed in an enclosure that is located outside the building; and

(b) comply with the ventilation requirements of AS/NZS 1596.

NSW I4D62 Fuel gas cylinders: enclosures

[2019: NSW H101.24.2]

An enclosure referred to in NSW I4D61—

(a) must be located not less than 3 m from any *window*, door, vent or other opening; and

(b) if located 3 m or more from a building must—

(i) have a concrete base; and

(ii) be constructed from heavy-gauge chain-wire mesh or other suitable material; and

(iii) be at least 1.8 m high; and

(iv) be so designed as to securely contain the gas cylinders in a single line; and

(v) be so designed as to allow cross ventilation; and

(c) if located less than 3 m from a building must—

(i) have a concrete base; and

(ii) have 3 sides constructed from concrete or masonry; and

(iii) have a concrete roof; and

(iv) be so designed as to securely contain the gas cylinders in a single line; and

(v) have a hinged, heavy-gauge chain-wire door capable of being secured against unauthorised entry; and

(vi) have its roof at least 600 mm above the uppermost fitting of any fuel gas cylinder housed therein.

NSW Part I5 Temporary structures

Introduction to this Part

NSW Part I5 contains *Deemed-to-Satisfy Provisions* for *temporary structures* used as an *entertainment venue*.

Deemed-to-Satisfy Provisions

NSW I5D1 Application of Part

[2019: NSW H102.1]

This Part applies to *temporary structures* used as *entertainment venues*.

NSW I5D2 Exits — exclusions

[2019: NSW H102.2]

In this Part, a reference to an entrance or *exit* does not include a reference to an entrance or *exit* provided for persons or animals performing in a *temporary structure*.

NSW I5D3 Location of exits

[2019: NSW H102.3]

Exits must be so provided and arranged as to afford a ready means of egress from all parts of a *temporary structure*.

NSW I5D4 Exits to be provided

[2019: NSW H102.4]

Without limiting the generality of NSW I5D3—

(a) the number of *exits* to be provided for a *temporary structure* designed to accommodate a number of persons specified in Column 1 of NSW Table I5D4 must be not less than the number of *exits* specified in Column 2 of that Table in respect of that number of persons; and

(b) the aggregate width of the *exits* to a *temporary structure* designed to accommodate a number of persons specified in Column 1 of NSW Table I5D4 must be not less than the width specified in Column 3 of that Table in respect of that number of persons.

Insert NSW Table I5D4 as follows:

NSW Table I5D4: Number of exits and widths

Column 1: accommodation provided (persons)	Column 2: number of *exits required*	Column 3: Aggregate width of *exits* (mm)
1 - 25	1 - 2	1000
26 - 50	2	1500
51 - 75	2	2000
76 - 100	2	2500
101 - 200	2	3000
201 - 400	3	4500
401 - 600	4	6000
601 - 800	5	7500
801 - 1000	5	9000

Column 1: accommodation provided (persons)	Column 2: number of *exits required*	Column 3: Aggregate width of *exits* (mm)
Over 1000	5 *exits* plus one additional *exit* for each additional 450 persons, or part thereof.	9000 mm, plus 500 mm for each additional 50 persons or part thereof.

Table Notes

(1) Where only one *exit* is provided that *exit* must be at least 1000 mm wide.

(2) Where 2 *exits* are provided each must be at least 500 mm wide.

NSW I5D5 Vertical clearance for exits

[2019: NSW H102.5]

Every part of an entrance or *exit* must provide a minimum unobstructed height of 2000 mm and, where the entrance or *exit* is beneath a stepped seating platform, infilled risers or other approved overhead protection must be provided above the entrance or *exit*.

NSW I5D6 Curtains across exits

[2019: NSW H102.6]

A flap or curtain used to cover an *exit* must be so designed that, when it is secured, it will not obstruct or impede egress.

NSW I5D7 Curtains and blinds

[2019: NSW H102.7]

Curtains and blinds for use in a *temporary structure* must comply with NSW Table S7C7.

NSW I5D8 Fabrics

[2019: NSW H102.8]

Fabric that is used in the construction of a *temporary structure* must have—

(a) a *Flammability Index* of not more than 6 where used—

(i) within a height of 4 m from the base of the *temporary structure*; or

(ii) in an air-supported *temporary structure* without other supporting framework; and

(b) a *Flammability Index* of not more than 25 in any other case.

NSW I5D9 Guardrails

[2019: NSW H102.9]

(1) A rigid guardrail must be provided at each end of a stepped or inclined platform, at least 750 mm high above the floor of the platform, and must extend—

(a) in the case of a stepped platform, from the front of the first riser; and

(b) in the case of an inclined platform, from the front of the first *row* of seating,

to the back of the highest platform and along the rear of that platform for its full width.

(2) A rigid guardrail must not obstruct any *aisle*, *cross-over* or *exit*.

NSW I5D10 Seating

[2019: NSW H102.10]

Seating must be provided in accordance with NSW I4D18, NSW I4D19, NSW I4D20(b), NSW I4D22(a) and (c), NSW I4D23(a) and NSW I4D25(a), (b), (c) and (d).

NSW I5D11 Sanitary accommodation

[2019: NSW H102.11]

Suitable sanitary accommodation must be provided at a location convenient to the *temporary structure*.

NSW I5D12 Projection suites

[2019: NSW H102.12]

Any *projection suite* must comply with NSW I4D47 and NSW I4D48.

NSW I5D13 Fireplaces and heating

[2019: NSW H102.13]

No fireplace or other form of heating equipment may be installed in a *temporary structure*, without the consent of the approval authority.

NSW I5D14 Electrical services

[2019: NSW H102.14]

Electrical services connected to the local supply authority's mains, to a generating plant or to a battery supply must comply with—

(a) the requirements of the local supply authority; and

(b) AS 3002; and

(c) where applicable, AS/NZS 3000; and

(d) NSW I4D51(a) and NSW I4D53(a).

NSW I5D15 Artificial lighting: general

[2019: NSW H102.15]

Artificial lighting must be provided, and must comply with NSW I4D54 and NSW I4D55.

NSW I5D16 Emergency lighting

[2019: NSW H102.15.1]

Emergency lighting must be provided to the areas provided with artificial lighting under NSW I5D15 and must include a sufficient number of lamps to give a minimum illumination of 0.2 lux at floor level.

NSW I5D17 Emergency lighting power supply

[2019: NSW H102.15.2]

Where emergency lighting is provided, the capacity of the battery and charging system must be sufficient to provide the illumination *required* by NSW I5D16 for—

(a) 30 minutes, in respect of a *temporary structure* designed to accommodate not more than 1000 persons; and

(b) 60 minutes, in respect of a *temporary structure* designed to accommodate more than 1000 persons.

NSW I5D18 Exit signs

[2019: NSW H102.16]

Exit signs must be provided above all *exits* and in such other locations as may be *required* by NSW E4D6 and must comply with E4D5 and E4D8.

NSW I5D19 Fire-fighting services

[2019: NSW H102.17]

(1) Fire-fighting services and appliances must be so provided as to afford adequate protection and must be so located as the approving authority, on the advice of the Commissioner of Fire and Rescue NSW, may require.

(2) Where *required* by the approving authority, the fire-fighting services and appliances must comply with Part E1.

NSW Part I6 Drive-in theatres

Introduction to this Part

NSW Part I6 contains *Deemed-to-Satisfy Provisions* for drive-in theatres.

Deemed-to-Satisfy Provisions

NSW I6D1 Application of Part

[2019: NSW H103.1]

This Part applies to drive-in theatres.

NSW I6D2 Speaker standards

[2019: NSW H103.2]

Speaker standards must—

(a) be placed at a minimum of 5.5 m centres in a line along each parking ramp; and

(b) be capable of being illuminated throughout any performance so as to be easily distinguishable at all times.

NSW I6D3 Lines of speaker standards

[2019: NSW H103.2.1]

Lines of speaker standards along parking ramps must be placed at a distance of not less than 12.2 m apart.

NSW I6D4 Electrical services

[2019: NSW H103.3]

The following electrical services must be installed underground—

(a) the supply authority's conductors within the site and the consumer's mains, unless otherwise approved; and

(b) electrical wiring external to any building on the site; and

(c) all wiring to the speaker standards.

NSW I6D5 Vehicular entrances

[2019: NSW H103.4]

Each public vehicular entrance to or exit from the drive-in theatre must be capable of being fully illuminated by flood lights that are so placed and so focussed as not to interfere with the vision of the driver of any motor vehicle.

NSW I6D6 Lighting

[2019: NSW H103.5]

(1) Driveways — Entrance and exit driveways, and the perimeter of the holding area, must be capable of being continuously illuminated by lamps capable of producing a minimum illumination of 0.5 lux at ground level.

(2) Ramp areas — The whole of the ramp area of a drive-in theatre must be capable of being floodlit by means of area flood lights to an illumination of at least 10 lux.

Section J Energy efficiency

Part J2 Energy efficiency

J2D1 Deemed-to-Satisfy Provisions

[2019: J0.0]

Delete J2D1(1) and insert NSW J2D1(1) as follows:

(1) Where a *Deemed-to-Satisfy Solution* is proposed, *Performance Requirements* NSW J1P1 to NSW J1P7 are satisfied by complying with—

(a) NSW J2D2; and

(a) NSW J3D2 to J3D10; and

(b) NSW J4D2 to J4D7; and

(c) NSW J5D2 to J5D8; and

(d) NSW J6D2 to J6D13; and

(e) NSW J7D2 to J7D9; and

(f) J8D2 to NSW J8D4; and

(g) J9D2 to J9D5.

Delete J2D2 and insert NSW J2D2 as follows:

NSW J2D2 Application of Section J

[2019: J0.1]

(1) For a Class 3 and 5 to 9 building, *Performance Requirement* NSW J1P1 is satisfied by complying with—

(a) Part J4, for the building *fabric*; and

(b) Part J5, for building sealing; and

(c) Part J6, for *air-conditioning* and ventilation; and

(d) Part J7, for artificial lighting and power; and

(e) Part J8, for heated water supply and *swimming pool* and spa pool plant; and

(f) J9D3, for facilities for energy monitoring.

(2) For a *sole-occupancy unit* of a Class 2 building or a Class 4 part of a building, *Performance Requirement* NSW J1P5 is satisfied by complying with—

(a) J3D5 and J3D6, for thermal breaks; and

(b) J4D3, for general thermal construction; and

(c) J3D10(3), J3D10(5) and J3D10(6), for floor edge insulation.

(3) For a Class 2 building or a Class 4 part of a building, *Performance Requirement* NSW J1P6 is satisfied by complying with Part J5 for building sealing.

(4) For a Class 2 building or a Class 4 part of a building, *Performance Requirement* NSW J1P7 is satisfied by complying with—

(a) Part J6, for *air-conditioning* and ventilation; and

(b) J8D2, for heated water supply; and

(c) J9D3, for facilities for energy monitoring.

(5) For a Class 2 to 9 building, *Performance Requirement* NSW J1P4 is satisfied by complying with J9D4 and J9D5.

Part J3 Elemental provisions for a sole-occupancy unit of a Class 2 building or a Class 4 part of a building

J3D1 Deemed-to-Satisfy Provisions

[New for 2022]

Delete J3D1(1) and insert NSW J3D1(1) as follows:

(1) Where a *Deemed-to-Satisfy Solution* is proposed, *Performance Requirements* NSW J1P1 to NSW J1P7 are satisfied by complying with—

(a) NSW J2D2; and

(a) NSW J3D2 to J3D10; and

(b) NSW J4D2 to J4D7; and

(c) NSW J5D2 to J5D8; and

(d) NSW J6D2 to J6D13; and

(e) NSW J7D2 to J7D9; and

(f) J8D2 to NSW J8D4; and

(g) J9D2 to J9D5.

Delete J3D2 and insert NSW J3D2 as follows:

NSW J3D2 Application of Part

[New for 2022]

The *Deemed-to-Satisfy Provisions* of this Part apply to building elements forming the external building *fabric* of a *sole-occupancy unit* of a Class 2 building and a Class 4 part of a building.

Delete J3D3 and insert NSW J3D3 as follows:

NSW J3D3 Reducing heating and cooling loads of a sole-occupancy unit of a Class 2 building or a Class 4 part of a building using house energy rating software

This clause has deliberately been left blank.

J3D3 does not apply in NSW.

Delete J3D4 and insert NSW J3D4 as follows:

NSW J3D4 Ceiling fans in a sole-occupancy unit of a Class 2 building or a Class 4 part of a building

This clause has deliberately been left blank.

J3D4 does not apply in NSW.

Delete J3D7 and insert NSW J3D7 as follows:

NSW J3D7 Roofs and ceilings of a sole-occupancy unit of a Class 2 building or a Class 4 part of a building

This clause has deliberately been left blank.

J3D7 does not apply in NSW.

Delete J3D8 and insert NSW J3D8 as follows:

NSW J3D8 External walls of a sole-occupancy unit of a Class 2 building or a Class 4 part of a building

This clause has deliberately been left blank.

J3D8 does not apply in NSW.

Delete J3D9 and insert NSW J3D9 as follows:

NSW J3D9 Wall-glazing construction of a sole-occupancy unit of a Class 2 building or a Class 4 part of a building

This clause has deliberately been left blank.

J3D9 does not apply in NSW.

J3D10 Floors of a sole-occupancy unit of a Class 2 building or a Class 4 part of a building

[New for 2022]

Delete J3D10(1) and insert NSW J3D10(1) as follows:

(1) This subclause does not apply in NSW.

Delete J3D10(2) and insert NSW J3D10(2) as follows:

(2) This subclause does not apply in NSW.

Delete J3D10(4) and insert NSW J3D10(4) as follows:

(4) This subclause does not apply in NSW.

Delete J3D11 and insert NSW J3D11 as follows:

NSW J3D11 External winter glazing of a sole-occupancy unit of a Class 2 building or a Class 4 part of a building

This clause has deliberately been left blank.

J3D11 does not apply in NSW.

Delete J3D12 and insert NSW J3D12 as follows:

NSW J3D12 External summer glazing of a sole-occupancy unit of a Class 2 building or a Class 4 part of a building

This clause has deliberately been left blank.

J3D12 does not apply in NSW.

Delete J3D13 and insert NSW J3D13 as follows:

NSW J3D13 Shading of a sole-occupancy unit of a Class 2 building or a Class 4 part of a building

This clause has deliberately been left blank.

J3D13 does not apply in NSW.

Delete J3D14 and insert NSW J3D14 as follows:

NSW J3D14 Net equivalent energy usage of a sole-occupancy unit of a Class 2 building or a Class 4 part of a building

This clause has deliberately been left blank.

J3D14 does not apply in NSW.

Delete J3D15 and insert NSW J3D15 as follows:

NSW J3D15 Net equivalent energy usage for a sole-occupancy unit of a Class 2 building or Class 4 part of building – home energy rating software

This clause has deliberately been left blank.

Part J4 Building fabric

J4D1 Deemed-to-Satisfy Provisions

[2019: J1.0]

Delete J4D1(1) and insert NSW J4D1(1) as follows:

(1) Where a *Deemed-to-Satisfy Solution* is proposed, *Performance Requirements* NSW J1P1 to NSW J1P7 are satisfied by complying with—

(a) NSW J2D2; and

(a) NSW J3D2 to J3D10; and

(b) NSW J4D2 to J4D7; and

(c) NSW J5D2 to J5D8; and

(d) NSW J6D2 to J6D13; and

(e) NSW J7D2 to J7D9; and

(f) J8D2 to NSW J8D4; and

(g) J9D2 to J9D5.

Delete J4D2 and insert NSW J4D2 as follows:

NSW J4D2 Application of Part

[2019: J1.1, NSW J(A)1.1]

(1) The *Deemed-to-Satisfy Provisions* of this Part apply to building elements forming the *envelope* of a Class 3 and Class 5 to 9 building.

(2) NSW J4D3, applies to building elements forming the *envelope* of a *sole-occupancy unit* in a Class 2 building and a Class 4 part of a building.

(3) (2) only applies to thermal insulation in a *sole-occupancy unit* in a Class 2 building and a Class 4 part of a building where a *development consent* specifies that the insulation is to be provided as part of the development.

Delete J4D3 and insert NSW J4D3 as follows:

NSW J4D3 Thermal construction—general

[2019: J1.2, NSW J(A)1.2]

(1) Where *required*, insulation must comply with AS/NZS 4859.1 and be installed so that it—

(a) abuts or overlaps adjoining insulation other than at supporting members such as studs, noggings, joists, furring channels and the like where the insulation must be against the member; and

(b) forms a continuous barrier with ceilings, walls, bulkheads, floors or the like that inherently contribute to the thermal barrier; and

(c) does not affect the safe or effective operation of a *service* or fitting.

(2) Where *required*, *reflective insulation* must be installed with—

(a) the necessary airspace to achieve the *required R-Value* between a reflective side of the *reflective insulation* and a building lining or cladding; and

(b) the *reflective insulation* closely fitted against any penetration, door or *window* opening; and

(c) the *reflective insulation* adequately supported by framing members; and

(d) each adjoining sheet of roll membrane being—

(i) overlapped not less than 50 mm; or

(ii) taped together.

(3) Where *required*, bulk insulation must be installed so that—

(a) it maintains its position and thickness, other than where it is compressed between cladding and supporting members, water pipes, electrical cabling or the like; and

(b) in a ceiling, where there is no bulk insulation or *reflective insulation* in the wall beneath, it overlaps the wall by not less than 50 mm.

(4) Roof, ceiling, wall and floor materials, and associated surfaces are deemed to have the thermal properties listed in Specification 36.

(5) The *required Total R-Value* and *Total System U-Value*, including allowance for thermal bridging, must be—

(a) calculated in accordance with AS/NZS 4859.2 for a roof or floor; or

(b) determined in accordance with Specification 37 for *wall-glazing construction*; or

(c) determined in accordance with Specification 39 or Section 3.5 of CIBSE Guide A for soil or sub-floor spaces.

Notes

Where *required* is deemed to refer to "Where a *development consent* specifies that insulation is to be provided as part of the development.".

Delete J4D6 and insert NSW J4D6 as follows:

NSW J4D6 Walls and glazing

[2019: J1.5]

(1) The *Total System U-Value* of *wall-glazing construction*, including *wall-glazing construction* which wholly or partly forms the *envelope* internally, must not be greater than—

(a) for a Class 5, 6, 7, 8 or 9b building or a Class 9a building other than a *ward area*, U2.0; and

(b) for a Class 3 or 9c building or a Class 9a *ward area*—

(i) in *climate zones* 1, 3, 4, 6 or 7, U1.1; or

(ii) in *climate zones* 2 or 5, U2.0; or

(iii) in *climate zone* 8, U0.9.

(2) The *Total System U-Value* of *display glazing* must not be greater than U5.8.

(3) The *Total System U-Value* of *wall-glazing construction* must be calculated in accordance with Specification 37.

(4) Wall components of a *wall-glazing construction* must achieve a minimum *Total R-Value* of—

(a) where the wall is less than 80% of the area of the *wall-glazing construction*, R1.0; or

(b) where the wall is 80% or more of the area of the *wall-glazing construction*, the value specified in NSW Table J4D6a.

(5) The *solar admittance* of externally facing *wall-glazing construction*, excluding *wall-glazing construction* which is wholly internal, must not be greater than—

(a) for a Class 5, 6, 7, 8 or 9b building or a Class 9a building other than a *ward area*, the values specified in NSW Table J4D6b; and

(b) for a Class 3 or 9c building or a Class 9a *ward area*, the values specified in NSW Table J4D6c.

(6) The *solar admittance* of a *wall-glazing construction* must be calculated in accordance with Specification 37.

(7) The *Total system SHGC* of *display glazing* must not be greater than 0.81 divided by the applicable shading factor specified in S37C7.

Insert NSW Table NSW J4D6a as follows:

NSW Table NSW J4D6a: Minimum wall Total R-Value - Wall area 80% or more of wall-glazing construction area

Climate zone	Class 5, 6, 7, 8 or 9b building or a Class 9a building other than a *ward area*	Class 3 or 9c building or Class 9a *ward area*
1	2.4	3.3
2	1.4	1.4
3	1.4	3.3
4	1.4	2.8
5	1.4	1.4
6	1.4	2.8
7	1.4	2.8
8	1.4	3.8

Insert NSW Table J4D6b as follows:

NSW Table J4D6b: Maximum wall-glazing construction solar admittance - Class 5, 6, 7, 8 or 9b building or Class 9a building other than a ward area

Climate zone	Eastern aspect *solar admittance*	Northern aspect *solar admittance*	Southern aspect *solar admittance*	Western aspect *solar admittance*
1	0.12	0.12	0.12	0.12
2	0.13	0.13	0.13	0.13
3	0.16	0.16	0.16	0.16
4	0.13	0.13	0.13	0.13
5	0.13	0.13	0.13	0.13
6	0.13	0.13	0.13	0.13
7	0.13	0.13	0.13	0.13
8	0.2	0.2	0.42	0.36

Insert Table J4D6c as follows:

Table J4D6c: Maximum wall-glazing construction solar admittance - Class 3 or 9c building or Class 9a ward area

Climate zone	Eastern aspect *solar admittance*	Northern aspect *solar admittance*	Southern aspect *solar admittance*	Western aspect *solar admittance*
1	0.07	0.07	0.10	0.07
2	0.10	0.10	0.10	0.10
3	0.07	0.07	0.07	0.07
4	0.07	0.07	0.07	0.07
5	0.10	0.10	0.10	0.10
6	0.07	0.07	0.07	0.07
7	0.07	0.07	0.08	0.07
8	0.08	0.08	0.08	0.08

Part J5 Building sealing

J5D1 Deemed-to-Satisfy Provisions

[2019: J3.0]

Delete J5D1(1) and insert NSW J5D1(1) as follows:

(1) Where a *Deemed-to-Satisfy Solution* is proposed, *Performance Requirements* NSW J1P1 to NSW J1P7 are satisfied by complying with—

(a) NSW J2D2; and

(a) NSW J3D2 to J3D10; and

(b) NSW J4D2 to J4D7; and

(c) NSW J5D2 to J5D8; and

(d) NSW J6D2 to J6D13; and

(e) NSW J7D2 to J7D9; and

(f) J8D2 to NSW J8D4; and

(g) J9D2 to J9D5.

Delete J5D2 and insert NSW J5D2 as follows:

NSW J5D2 Application of Part

[2019: J3.1, NSW J(A)2.1]

The *Deemed-to-Satisfy Provisions* of this Part apply to elements forming the *envelope* of a Class 2 to 9 building, other than—

(a) a building in *climate zones* 1, 2, 3 and 5 where the only means of *air-conditioning* is by using an evaporative cooler; or

(b) a permanent building opening, in a space where a gas appliance is located, that is necessary for the safe operation of a gas appliance; or

(c) in a Class 3 or Class 5 to 9 building, a building or space where the mechanical ventilation *required* by Part F6 provides sufficient pressurisation to prevent infiltration; or

(d) parts of buildings that cannot be fully enclosed.

Delete J5D5 and insert NSW J5D5 as follows:

NSW J5D5 Windows and doors

[2019: J3.4]

(1) A door, openable *window* or the like must be sealed—

(a) when forming part of the *envelope*; or

(b) in *climate zones* 4, 5, 6, 7 or 8.

(2) The requirements of (1) do not apply to—

(a) a *window* complying with AS 2047; or

(b) a fire door or smoke door; or

(c) a roller shutter door, roller shutter grille or other security door or device installed only for out-of-hours security.

(3) A seal to restrict air infiltration—

(a) for the bottom edge of a door, must be a draft protection device; and

(b) for the other edges of a door or the edges of an openable *window* or other such opening, may be a foam or rubber compression strip, fibrous seal or the like.

(4) An entrance to a building, if leading to a *conditioned space* must have an airlock, *self-closing* door, *rapid roller door*,

revolving door or the like, other than—

(a) where the *conditioned space* has a *floor area* of not more than 50 m^2; or

(b) where a café, restaurant, open front shop or the like has—

(i) a 3 m deep un-conditioned zone between the main entrance, including an open front, and the *conditioned space*; and

(ii) at all other entrances to the café, restaurant, open front shop or the like, *self-closing* doors.

(5) A loading dock entrance, if leading to a *conditioned space*, must be fitted with a *rapid roller door* or the like.

Applications

NSW J5D5(5) does not apply to a Class 2 building or a Class 4 part of a building.

Part J6 Air-conditioning and ventilation

J6D1 Deemed-to-Satisfy Provisions

[2019: J5.0]

Delete J6D1(1) and insert NSW J6D1(1) as follows:

(1) Where a *Deemed-to-Satisfy Solution* is proposed, *Performance Requirements* NSW J1P1 to NSW J1P7 are satisfied by complying with—

(a) NSW J2D2; and

(a) NSW J3D2 to J3D10; and

(b) NSW J4D2 to J4D7; and

(c) NSW J5D2 to J5D8; and

(d) NSW J6D2 to J6D13; and

(e) NSW J7D2 to J7D9; and

(f) J8D2 to NSW J8D4; and

(g) J9D2 to J9D5.

Delete J6D2 and insert NSW J6D2 as follows:

NSW J6D2 Application of Part

[2019: J5.1, NSW J(A)3.1]

(1) The *Deemed-to-Satisfy Provisions* of this Part do not apply to a Class 8 *electricity network substation*.

(2) J6D10 does not apply to a Class 2 building or a Class 4 part of a building.

J6D10 Space heating

[2019: J5.9]

Delete J6D10(2) and insert NSW J6D10(2) as follows:

(2) An electric heater may be used for heating a bathroom in a Class 3, 9a or 9c building if the heating capacity is not more than 1.2 kW and the heater has a timer.

Part J7 Artificial lighting and power

J7D1 Deemed-to-Satisfy Provisions

[2019: J6.0]

Delete J7D1(1) and insert NSW J7D1(1) as follows:

(1) Where a *Deemed-to-Satisfy Solution* is proposed, *Performance Requirements* NSW J1P1 to NSW J1P7 are satisfied by complying with—

(a) NSW J2D2; and

(a) NSW J3D2 to J3D10; and

(b) NSW J4D2 to J4D7; and

(c) NSW J5D2 to J5D8; and

(d) NSW J6D2 to J6D13; and

(e) NSW J7D2 to J7D9; and

(f) J8D2 to NSW J8D4; and

(g) J9D2 to J9D5.

Delete J7D2 and insert NSW J7D2 as follows:

NSW J7D2 Application of Part

[2019: J6.1, NSW J(A)4.1]

(1) The *Deemed-to-Satisfy Provisions* of this Part do not apply to a Class 2 building or a Class 4 part of a building.

(2) J7D3, J7D4 and J7D6(1)(b) do not apply to a Class 8 *electricity network substation*.

J7D3 Artificial lighting

[2019: J6.2]

Delete J7D3(1) and insert NSW J7D3(1) as follows:

(1) This subclause does not apply in NSW.

Delete J7D3(2) and insert NSW J7D3(2) as follows:

(2) In a Class 3 or Class 5 to 9 building—

(a) for artificial lighting, the aggregate design illumination power load must not exceed the sum of the allowances obtained by multiplying the area of each space by the maximum *illumination power density* in Table J7D3a; and

(b) the aggregate design illumination power load in (a) is the sum of the design illumination power loads in each of the spaces served; and

(c) where there are multiple lighting systems serving the same space, the design illumination power load for (b) is—

(i) the total illumination power load of all systems; or

(ii) where a control system permits only one system to operate at a time based on the highest illumination power load; or determined by the formula—

$$[H \times T/2 + P \times (100 - T/2]/100$$

(d) In the formula at (c)(ii)—

(i) H = the highest illumination power load; and

(ii) T = the time for which the maximum illumination power load will occur, expressed as a percentage; and

(iii) P = the predominant illumination power load.

J7D4 Interior artificial lighting and power control

[2019: J6.3]

Delete J7D4(4) and insert NSW J7D4(4) as follows:

(4) 95% of the light fittings in a building or *storey* of a building, other than a Class 3 building of more than 250 m^2 must be controlled by—

(a) a time switch in accordance with Specification 40; or

(b) an occupant sensing device such as—

(i) a security key card reader that registers a person entering and leaving the building; or

(ii) a motion detector in accordance with Specification 40.

Part J8 Heated water supply and swimming pool and spa pool plant

J8D1 Deemed-to-Satisfy Provisions

[2019: J7.0]

Delete J8D1(1) and insert NSW J8D1(1) as follows:

(1) Where a *Deemed-to-Satisfy Solution* is proposed, *Performance Requirements* NSW J1P1 to NSW J1P7 are satisfied by complying with—

(a) NSW J2D2; and

(a) NSW J3D2 to J3D10; and

(b) NSW J4D2 to J4D7; and

(c) NSW J5D2 to J5D8; and

(d) NSW J6D2 to J6D13; and

(e) NSW J7D2 to J7D9; and

(f) J8D2 to NSW J8D4; and

(g) J9D2 to J9D5.

Delete J8D3 and insert NSW J8D3 as follows:

NSW J8D3 Swimming pool heating and pumping

[2019: J7.3]

(1) Heating for a *swimming pool* must be by—

(a) a solar heater; or

(b) a heater using reclaimed heat from another process such as reject heat from a refrigeration plant; or

(c) a geothermal heater; or

(d) a gas heater that—

(i) if rated to consume 500 MJ/hour or less, achieves a minimum gross thermal efficiency of 86%; or

(ii) if rated to consume more than 500 MJ/hour, achieves a minimum gross thermal efficiency of 90%; or

(e) a heat pump; or

(f) a combination of (a) to (e).

(2) Where some or all of the heating *required* by (1) is by a gas heater or a heat pump, the *swimming pool* must have—

(a) a cover with a minimum *R-Value* of 0.05; and

(b) a time switch to control the operation of the heater.

(3) A time switch must be provided to control the operation of a circulation pump for a *swimming pool*.

(4) Where *required*, a time switch must be capable of switching electric power on and off at variable pre-programmed times and on variable pre-programmed days.

(5) Pipework carrying heated or chilled water for a *swimming pool* must comply with the insulation requirements of J6D9.

(6) For the purpose of J8D3, a *swimming pool* does not include a spa pool.

Applications

NSW J8D3 does not apply to a Class 2 building and a Class 4 part of a building.

Delete J8D4 and insert NSW J8D4 as follows:

NSW J8D4 Spa pool heating and pumping

[2019: J7.4]

(1) Heating for a spa pool that shares a water recirculation system with a *swimming pool* must be by—

(a) a solar heater; or

(b) a heater using reclaimed heat from another process such as reject heat from a refrigeration plant; or

(c) a geothermal heater; or

(d) a gas heater that—

(i) if rated to consume 500 MJ/hour or less, achieves a minimum gross thermal efficiency of 86%; or

(ii) if rated to consume more than 500 MJ/hour, achieves a minimum gross thermal efficiency of 90%; or

(e) a heat pump; or

(f) a combination of (a) to (e).

(2) Where some or all of the heating *required* by (1) is by a gas heater or a heat pump, the spa pool must have—

(a) a cover with a minimum *R-Value* of 0.05; and

(b) a push button and a time switch to control the operation of the heater.

(3) A time switch must be provided to control the operation of a circulation pump for a spa pool having a capacity of 680 L or more.

(4) Where *required*, a time switch must be capable of switching electric power on and off at variable pre-programmed times and on variable pre-programmed days.

(5) Pipework carrying heated or chilled water for a spa pool must comply with the insulation requirements of J6D9.

Applications

J8D4 does not apply to a Class 2 building and a Class 4 part of a building.

Part J9 Energy monitoring and on-site distributed energy resources

J9D1 Deemed-to-Satisfy Provisions

[2019: J8.0]

Delete J9D1(1) and insert NSW J9D1(1) as follows:

(1) Where a *Deemed-to-Satisfy Solution* is proposed, *Performance Requirements* NSW J1P1 to NSW J1P7 are satisfied by complying with—

(a) NSW J2D2; and

(a) NSW J3D2 to J3D10; and

(b) NSW J4D2 to J4D7; and

(c) NSW J5D2 to J5D8; and

(d) NSW J6D2 to J6D13; and

(e) NSW J7D2 to J7D9; and

(f) J8D2 to NSW J8D4; and

(g) J9D2 to J9D5.

NSW Part J1 Energy efficiency

Introduction to this Part

This NSW Part J1 replaces Part J1.

This Part sets the thermal performance properties of building *fabric*, the energy efficiency of key energy using equipment and the features a building must have to facilitate the future installation of distributed energy resources.

Notes

(1) For a Class 2 building or a Class 4 part of a building, where a relevant *development consent* or an application for a complying development certificate requires compliance with a BASIX Single Dwelling or Multi Dwelling Certificate issued under Version 3.0 or earlier, NSW Section J of NCC 2019 Volume One Amendment 1 applies.

(2) For a Class 2 building or a Class 4 part of a building, where a relevant *development consent* or an application for a complying development certificate requires compliance with a BASIX Single Dwelling or Multi Dwelling Certificate issued under Version 4.0 or later, Section J of NCC 2022 Volume One applies.

(3) For a Class 2 building or a Class 4 part of a building, where a relevant *development consent* or an application for a complying development certificate requires compliance with a BASIX Alterations and Additions Certificate, NSW Section J of NCC 2019 Volume One Amendment 1 applies.

(4) For a Class 3 building or Class 5 to 9 building:

(a) From 1 May 2023 to 30 September 2023 NSW Section J of NCC 2019 Volume One Amendment 1 may apply instead of Section J of NCC 2022 Volume One.

(b) From 1 October 2023 Section J of NCC 2022 Volume One applies.

Notes

In NSW, Class 2 buildings and Class 4 parts of buildings are subject to BASIX (the Building Sustainability Index), however Class 3 buildings are not.

BASIX is the web-based planning tool designed to assess the potential performance of certain residential buildings against a range of sustainability indices including thermal comfort and energy. Commitments made under BASIX become a condition of the relevant *development consent* or complying development certificate.

BASIX applies in NSW to all new Class 2 buildings and Class 4 parts of buildings; and to alterations and additions to buildings of those classes where the work is subject to BASIX and also where an applicant elects to comply with BASIX.

The provisions of Section J are therefore designed to complement requirements that arise under BASIX and which are implemented via the *development consent*.

Where BASIX is not applied to alterations and additions to these buildings, the provisions will also complement council development controls that require energy efficiency measures to be incorporated as part of the alterations and additions.

Objectives

NSW J1O1 Objective

[2019: JO1]

The Objective of this Section is to—

(a) reduce energy consumption and energy peak demand; and

(b) reduce greenhouse gas emissions; and

(c) improve occupant health and *amenity*.

Functional Statements

NSW J1F1 Energy efficiency

[2019: JF1]

A building must—

(a) reduce the energy consumption and energy peak demand of key energy using equipment; and

(b) reduce the greenhouse gas emissions that occur as a result of a building's energy consumption and energy source; and

(c) for a *sole-occupancy unit* of a Class 2 building or a Class 4 part of a building, improve occupant health and *amenity* by mitigating the impact of extreme hot and cold weather events and energy blackouts; and

(d) for other than in a *sole-occupancy unit* of a Class 2 building or a Class 4 part of a building, protect occupant health and *amenity* by ensuring the building *envelope* assists in the maintenance of acceptable internal conditions while the building is occupied; and

(e) be able to accommodate the future installation of distributed energy resources.

Performance Requirements

NSW J1P1 Energy use

[2019: JP1]

A building including its *services*, must have features that facilitate the efficient use of energy appropriate to—

(a) the function and use of the building; and

(b) the level of human comfort required for the building use; and

(c) solar radiation being—

(i) utilised for heating; and

(ii) controlled to minimise energy for cooling; and

(d) the energy source of the *services*; and

(e) the sealing of the building *envelope* against air leakage; and

(f) for a *conditioned space*, achieving an hourly *regulated energy* consumption, averaged over the annual *hours of operation*, of not more than—

(i) for a Class 6 building, 80 kJ/m².hr; and

(ii) for a Class 5, 7b, 8 or 9a building other than a *ward area*, or a Class 9b *school*, 43 kJ/m².hr; and

(iii) for all other building classifications, 15 kJ/m².hr.

Applications

NSW J1P1 does not apply to a Class 2 building or a Class 4 part of a building.

NSW J1P4 Renewable energy and electric vehicle charging

[New for 2022]

A building must have features that facilitate the future installation of on-site renewable energy generation and storage and electric vehicle charging equipment.

NSW J1P5 Building fabric—Class 2 building and Class 4 parts of a building

[2019: NSW J(A)P1]

(1) Thermal insulation in a building must be installed in a manner and have characteristics, which facilitate the efficient use of energy for artificial heating and cooling.

(2) A building must have, to the degree necessary, thermal breaks installed between the framing and external cladding, to facilitate efficient thermal performance of the building envelope.

Explanatory Information

(1) NSW J1P5 only applies to a Class 2 building or a Class 4 part of a building.

(2) NSW J1P5(1) only applies to thermal insulation in a building where a *development consent* specifies that the insulation is to be provided as part of the development.

(3) NSW J1P5(2) only applies to a metal framed roof and metal framed wall.

NSW J1P6 Building sealing—Class 2 building and Class 4 parts of a building

[2019: NSW J(A) P2]

A building must have, to the degree necessary, a level of building sealing against air leakage to facilitate the efficient use of energy for artificial heating and cooling appropriate to—

(a) the function and use of the building; and

(b) the internal environment; and

(c) the geographic location of the building.

Applications

NSW J1P6 only applies to a Class 2 building or Class 4 part of a building, except—

(a) a building in *climate zones* 2 and 5 where the only means of *air-conditioning* is by using an evaporative cooler; and

(b) a permanent building opening in a space where a gas appliance is located, that is necessary for the safe operation of a gas appliance; and

(c) parts that cannot be fully enclosed.

NSW J1P7 Services—Class 2 building and Class 4 parts of a building

[2019: NSW J(A)P3]

A building's *services* must have features that, to the degree necessary, facilitate the efficient use of energy appropriate to—

(a) the function and use of the *service*; and

(b) the internal environment; and

(c) the geographic location of the building; and

(d) the energy source of the *service*.

Applications

NSW J1P7 only applies to a Class 2 building or Class 4 part of a building.

Verification Methods

NSW J1V1 NABERS Energy

[2019: JV1]

(1) For a Class 5 building, compliance with NSW J1P1 is verified when—

(a) a minimum 5.5-star *NABERS Energy* base building Commitment Agreement is obtained; and

(b) the energy model required for (a) demonstrates—

(i) the base building's greenhouse gas emissions are not more than 67% of the 5.5-star level when excluding—

(A) tenant supplementary heating and cooling systems; and

(B) external lighting; and

(C) *carpark services*; and

(ii) a *thermal comfort level* of between a *Predicted Mean Vote* of -1 to +1 is achieved across not less than 95% of the *floor area* of all occupied zones for not less than 98% of the annual *hours of operation* of the building; and

(c) the building complies with the additional requirements in Specification 33.

(2) For a Class 3 building, compliance with NSW J1P1 is verified when—

(a) a minimum 4-star *NABERS Energy* for Hotels Commitment Agreement is obtained; and

(b) the operating hours of the *services* are not less than 12 hours per day in bedrooms, dining rooms and conference facilities, 24 hours per day in corridors and foyers and 18 hours per day in back-of-house areas; and

(c) the energy model *required* for (a) demonstrates that—

(i) the greenhouse gas emissions of the *services* are less than 70% of the 5-star level; and

(ii) a *thermal comfort level* of between a *Predicted Mean Vote* of -1 to +1 is achieved across not less than 95% of the *floor area* of occupied zones, excluding indoor *swimming pool* chambers, for not less than 98% of the annual *hours of operation* of the building; and

(iii) the space temperature in any indoor *swimming pool* chamber is maintained at 2°C above the pool temperature during occupied hours of not less than 12 hours per day; and

(d) the building complies with the additional requirements in Specification 33.

(3) For a Class 6 shopping centre, compliance with NSW J1P1 is verified when—

(a) a minimum 4.5-stars *NABERS Energy* for Shopping Centres Commitment Agreement is obtained; and

(b) the building has:

(i) an *air-conditioned* common area of not less than 20% of the gross lettable area; and

(ii) a gross lettable area greater than 15 000 m^2; and

(c) the energy model *required* for (a) demonstrates—

(i) the greenhouse gas emissions of the *services* covered within the scope of *NABERS Energy* for Shopping Centres ratings are less than 80% of the 4.5-star level; and

(ii) a *thermal comfort level* of between a *Predicted Mean Vote* of -1 to +1 is achieved across not less than 95% of the *floor area* of *air-conditioned* spaces within the scope of the rating for not less than 98% of the annual *hours of operation* the building; and

(d) the building complies with the additional requirements in Specification 33.

(4) The calculation method for (1), (2) and (3) must comply with ANSI/ASHRAE Standard 140.

NSW J1V2 Green star

[2019: JV2]

(1) For a Class 3, 5, 6, 7, 8 or 9 building, compliance with NSW J1P1 is verified when—

(a) the building complies with the simulation requirements, and is registered, for a *Green Star* – Design & As-Built or Green Star Buildings rating; and

(b) the *annual greenhouse gas emissions* of the proposed building are less than 90% of the *annual greenhouse gas emissions* of the *reference building*; and

(c) in the proposed building, a *thermal comfort level* of between a *Predicted Mean Vote* of -1 to +1 is achieved across not less than 95% of the *floor area* of all occupied zones for not less than 98% of the annual *hours of operation* of the building; and

(d) the building complies with the additional requirements in Specification 33.

(2) The calculation method used for (1) must comply with ANSI/ASHRAE Standard 140.

NSW J1V3 Verification using a reference building

[2019: JV3]

(1) For a Class 3, 5, 6, 7, 8 or 9 building, compliance with NSW J1P1 is verified when—

(a) it is determined that the *annual greenhouse gas emissions* of the proposed building are not more than the *annual greenhouse gas emissions* of a *reference building* when—

(i) the proposed building is modelled with the proposed *services*; and

(ii) the proposed building is modelled with the same *services* as the *reference building*; and

(b) in the proposed building, a *thermal comfort level* of between a *Predicted Mean Vote* of -1 to +1 is achieved across not less than 95% of the *floor area* of all occupied zones for not less than 98% of the annual *hours of operation* of the building; and

(c) the building complies with the additional requirements in Specification 33.

(2) The *annual greenhouse gas emissions* of the proposed building may be offset by—

(a) *renewable energy* generated and used on *site*; and

(b) another process such as reclaimed energy, used on *site*.

(3) The calculation method used for (1) and (2) must comply with—

(a) ANSI/ASHRAE Standard 140; and

(b) Specification 34.

NSW J1V4 Verification of building envelope sealing

[2019: JV4]

(1) Compliance with NSW J1P1(e) and NSW J1P6 is verified for building *envelope* sealing when the *envelope* is sealed at an air permeability rate, tested in accordance with Method 1 of AS/NZS ISO 9972, of not more than—

(a) for a Class 2 building or a Class 4 part of a building, 10 m³/hr.m² at 50 Pa reference pressure; or

(b) for a Class 5, 6, 8 or 9a or 9b building, other than a *ward area*, in *climate zones* 1, 7 and 8, 5 m³/hr.m² at 50 Pa reference pressure; or

(c) for a Class 3 or 9c building, or a Class 9a *ward area* in *climate zones* 1, 3, 4, 6, 7 and 8, 5 m³/hr.m² at 50 Pa reference pressure.

(2) In a *sole-occupancy unit* of a Class 2 building or a Class 4 part of a building, where an air permeability rate of not more than 5 $m^3/hr.m^2$ at 50 Pa reference pressure is achieved—

(a) a mechanical ventilation system must be provided that—

(i) can be manually overridden; and

(ii) provides outdoor air, either—

(A) continuously; or

(B) intermittently, where the system has controls that enable operation for not less than 25 per cent of each 4 hour segment; and

(iii) provides a flow rate not less than that achieved with the following formula: $Q = (0.05 \times A + 3.5 \times (N + 1))/p$, where—

(A) Q = the required air flow rate (L/s); and

(B) A = the total area of the *sole-occupancy unit* of a Class 2 or Class 4 part of a building (m^2); and

(C) N = the number of bedrooms in the *sole-occupancy unit* of a Class 2 or Class 4 part of a building; and

(D) p = the fraction of time within each 4 hour segment that the system is operational; and

(b) any space with a solid-fuel burning combustion appliance must be ventilated with permanent openings directly to outside with a free area of not less than half of the cross-sectional area of the appliance's flue; and

(c) any space with a gas-fueled combustion appliance must be ventilated in accordance with—

(i) clause 6.4 of AS/NZS 5601.1; and

(ii) clause 6.4.5 of AS/NZS 5601.1.

(3) For the purposes of (2)(c), the volume of the space is considered to be 1 m^3 for determining ventilation requirements.

Schedule 1 Definitions

Aisle: A walkway at the end of *rows* of seating, not being *continental seating*, leading to a cross-over or to an egress doorway.

Appropriate authority

The relevant authority with the responsibility to determine the particular matter.

Assembly building

A building where people may assemble for—

(a) civic, theatrical, social, political or religious purposes including a library, theatre, public hall or place of worship; or

(b) educational purposes in a *school*, *early childhood centre*, preschool, or the like; or

(c) entertainment, recreational or sporting purposes including—

(i) a cinema; or

(ii) a sports stadium, sporting or other club; or

(d) transit purposes including a bus station, railway station, airport or ferry terminal.

Auditorium: A part of an *entertainment venue* used or intended to be used for the purposes of accommodating an audience to an entertainment.

Continental seating: *Rows* of seating in which the *rows* extend the full width of an *auditorium* without intervening *aisles*.

Cross-over: In relation to an *entertainment venue* or *temporary structure*, means a walkway between *aisles* or between an *aisle* and an egress doorway.

Designated bushfire prone area

Land that:

(a) has been designated under legislation; or

(b) has been identified under an environmental planning instrument, development control plan or in the course of processing and determining a development application,

as land that can support a bushfire or is likely to be subject to bushfire attack.

Development consent: Is as defined in the Environmental Planning and Assessment Act 1979.

Entertainment venue: Is as defined in the Environmental Planning and Assessment Regulation 2021.

Film: A cinematograph film of a size of 35 mm or greater.

Flying scenery: Scenery of a kind that is lifted above the *stage* floor by means of lines run from a *grid*.

Garage top dwelling: A Class 1a dwelling located above a Class 10a *private garage* which is not associated with that Class 1a dwelling and includes any internal entry stair serving the garage top dwelling.

Grid: A framework from which lines are run for the purpose of lifting *flying scenery* above the *stage* floor.

Information and education facility: Is as defined in the Standard Instrument—Principal Local Environment Plan.

Licensed premises: Is as defined in the Liquor Act 2007.

Minimum lateral clearance: A permanently unobstructed space having a height above floor level of not less than 2000 mm and a width of not less than the specified measurement.

Planning for Bush Fire Protection: Is as prescribed by the Environmental Planning and Assessment Regulation 2021.

Projection suite: Such part of an *entertainment venue* as is designed to accommodate apparatus used for projecting *films*.

Row: A row of seating—

(a) between a wall or other barrier and an *aisle*; or

(b) between 2 *aisles*.

Small live music or arts venue: The whole or part of a building—

(a) in which cultural activities including live music, visual arts' displays, dancing, poetry and spoken word performances are provided to the public; and

(b) that has a *floor area* of not more than 300 square metres; and

(c) that has a *rise in storeys* of not more than 2; and

(d) that occupies not more than 2 *storeys* including the ground floor *storey*; and

(e) where pyrotechnics or theatrical smoke (smoke machines, hazers or the like) are not used.

Spa pool: Is as defined in the Swimming Pools Act 1992.

Special fire protection purpose: (As per Section 100B(6) of the Rural Fires Act 1997) means any of the following purposes:

(a) a school,

(b) a child care centre,

(c) a hospital (including a hospital for the mentally ill or mentally disordered),

(d) a hotel, motel or other tourist accommodation,

(e) a building wholly or principally used as a home or other establishment for mentally incapacitated persons,

(f) seniors housing within the meaning of State Environmental Planning Policy (Housing for Seniors or People with a Disability) 2004 (now SEPP (Housing) 2021),

(g) a group home within the meaning of State Environmental Planning Policy No 9 - Group Homes (now SEPP (Housing) 2021),

(h) a retirement village,

(i) any other purpose prescribed by the regulations (Rural Fires Regulation 2022).

Notes

For application of this definition in the BCA, the term "school" does not include a college, university or similar tertiary educational establishment.

Temporary structure: Either—

(a) a booth, tent or other temporary enclosure, whether or not a part of the booth, tent or enclosure is permanent; or

(b) a mobile structure.

Schedule 2 Referenced documents

Insert NSW Table 1 as follows:

NSW Table 1: Schedule of referenced documents

No.	Date	Title	Volume One	Volume Two	Housing Provisions
AS/NZS 1596	2014	The Storage and Handling of LP Gas	NSW I4D61	N/A	N/A
AS 1603	2018	Automatic fire detection and alarm systems — Heat alarms (See Note 1)	N/A	N/A	NSW 9.5.1
AS 2001 Part 5.4	2005	Methods of test for textiles: Dimensional washing and drying procedures for textile texting	NSW S7C7	N/A	N/A
AS/NZS 3000	2018	Electrical installations (known as the Australian/New Zealand Wiring Rules)	NSW I5D14	N/A	N/A
AS/NZS 3002	2008	Electrical installations — Shows and carnivals	NSW I5D14	N/A	N/A
SSL	N/A	Appraisal Specification FAS102	NSW I4D46	N/A	N/A
NSW Legislation	1979	Environmental Planning and Assessment Act	NSW G5D3, NSW Schedule 1	NSW H7D4, NSW Schedule 1	NSW Schedule 1
NSW Legislation	2021	Environmental Planning and Assessment Regulation	NSW I4D1, NSW I4D46, NSW Schedule 1	NSW Schedule 1	NSW Schedule 1
NSW Legislation	2007	Liquor Act	NSW Schedule 1	NSW Schedule 1	NSW Schedule 1
NSW Legislation	1997	Rural Fires Act	NSW G5D3, NSW G5D4, NSW Schedule 1	NSW Schedule 1, NSW H7D4	NSW Schedule 1
NSW Legislation	N/A	Standard Instrument— Principal Local Environmental Plan	NSW Schedule 1	NSW Schedule 1	NSW Schedule 1
NSW Legislation	1992	Swimming Pools Act	NSW G1P2, NSW G1D2, NSW Schedule 1	NSW H7P1, NSW H7D2, NSW Schedule 1	NSW Schedule 1

No.	Date	Title	Volume One	Volume Two	Housing Provisions
NSW Legislation	2018	Swimming Pools Regulation	NSW G1P2, NSW G1D2	NSW H7P1, NSW H7D2	N/A
NSW Legislation	2011	Work Health and Safety Act	NSW G1D5	N/A	N/A

Table Notes

(1) Heat alarms complying with AS 1603.3 must be a class type A1 or A2.

NSW Footnote: Other legislation affecting buildings

In addition to any applicable provisions of the Environmental Planning and Assessment Act 1979, the Environmental Planning and Assessment Regulation 2021 and this Code, there is a variety of other regulatory provisions, including legislation, regulation and departmental policies that impose requirements affecting the design, construction and/or performance of buildings in NSW.

The following is a non-definitive list of such provisions. It does not include Commonwealth provisions that may apply in NSW, nor planning and environmental standards that may impose building requirements in individual circumstances. It is meant as an indicative guide only and is not to be relied upon in any way as a substitute for further research, investigation and legal advice needed to determine building standards in individual circumstances.

1. Abattoirs, Knackeries and Meat Premises

Administering Agency

NSW Food Authority

Relevant Legislation

Food Regulation 2015

2. Boarding Houses

Administering Agency

Department of Customer Service and Department of Communities and Justice

Relevant Legislation

Boarding Houses Regulation 2013

3. Children's Services

Administering Agency

Department of Education

Relevant Legislation

Children (Education and Care Services National Law Application) Act 2010

Children (Education and Care Services) Supplementary Provisions Regulation 2019

4. Crematoria, Vaults, Mortuary Churches etc.

Administering Agency

NSW Ministry of Health

Relevant Legislation

Public Health Regulation 2012

5. Crown Land — Construction Approval

Administering Agency

Department of Planning and Environment

Relevant Legislation

Crown Land Management Act 2016

Crown Land Management Regulation 2018

Administering Agency

NSW Rural Fire Service

Relevant Legislation

Rural Fires Act 1997

6. Dairies

Administering Agency

NSW Food Authority

Relevant Legislation

Food Regulation 2015

7. Dangerous Goods (including Gas Installations)

Administering Agency

Department of Planning and Environment

Relevant Legislation

Gas Supply Act 1996

Gas Supply (Safety and Network Management) Regulation 2013

Administering Agency

Department of Customer Service

Relevant Legislation

Explosives Regulation 2013

Work Health and Safety Regulation 2017

Gas and Electricity (Consumer Safety) Act 2017

Gas and Electricity (Consumer Safety) Regulation 2018

8. Dining Rooms and Bars

Administering Agency

NSW Food Authority

Relevant Legislation

Food Regulation 2015

9. Electrical Installations

Administering Agency

Department of Customer Service

Relevant Legislation

Gas and Electricity (Consumer Safety) Regulation 2018

Gas and Electricity (Consumer Safety) Act 2017

Work Health and Safety Regulation 2017

10. Fire Prevention in Existing Buildings

Administering Agency

Department of Planning and Environment and Department of Customer Service

Relevant Legislation

Environmental Planning and Assessment Act 1979

Environmental Planning and Assessment Regulation 2021

Environmental Planning and Assessment (Development Certification and Fire Safety) Regulation 2021

11. Food Premises

Administering Agency

NSW Food Authority

Relevant Legislation

Food Regulation 2015

12. Foundries

Administering Agency

Department of Planning and Environment

Relevant Legislation

Gas Supply Act 1996

Administering Agency

Department of Customer Service

Relevant Legislation

Work Health and Safety Regulation 2017

13. Historic Buildings

Administering Agency

Department of Planning and Environment

Relevant Legislation

Heritage Regulation 2012

14. Hospitals, Nursing Homes and Health Care Buildings

Administering Agency

NSW Ministry of Health

Relevant Legislation

Private Health Facilities Regulation 2017

Poisons and Therapeutic Goods Regulation 2008

15. Hot or Warm Water Systems and Air Handling Systems

Administering Agency

NSW Ministry of Health

Relevant Legislation

Public Health Regulation 2012

16. Lift Installations

Administering Agency

Department of Customer Service

Relevant Legislation

Work Health and Safety Regulation 2017

17. Moveable Dwellings (in Caravan Parks)

Administering Agency

Department of Planning and Environment

Relevant Legislation

Local Government Act 1993

Local Government (Manufactured Home Estates, Caravan Parks, Camping Grounds and Moveable Dwellings) Regulation 2021

18. Work Health and Safety

Administering Agency

Department of Customer Service

Relevant Legislation

Work Health and Safety Regulation 2017

19. Pharmacies

Administering Agency

Pharmacy Council of New South Wales

Relevant Legislation

Health Practitioner Regulation National Law Regulation 2018

Health Practitioner Regulation (New South Wales) Regulation 2016

20. Planning Controls

Administering Agency

Department of Planning and Environment

Relevant Legislation

Environmental Planning and Assessment Act 1979

Environmental Planning and Assessment Regulation 2021

21. Premises for Activities Involving Skin Penetration

Administering Agency

NSW Ministry of Health

Relevant Legislation

Public Health Regulation 2012

22. Sanitary Plumbing, Water Supply and Sewerage

Administering Agency

Department of Planning and Environment

Relevant Legislation

Local Government Act 1993

Local Government (General) Regulation 2021

Administering Agency

Department of Customer Service

Relevant Legislation

Plumbing and Drainage Act 2011

Plumbing and Drainage Regulation 2017

Approval to Connect to Network Utility Operator's System

Refer to the Network Utility Operator for the current Act & Regulation

Hunter Water Act 1991

Sydney Water Act 1994

Water Industry Competition Act (WICA) 2006

23. Septic Tank Installations

Administering Agency

Department of Planning and Environment

Relevant Legislation

Local Government Act 1993

Local Government (General) Regulation 2021

24. Sleeping Accommodation

Administering Agency

NSW Ministry of Health

Relevant Legislation

Public Health Regulation 2012

25. Smoking Restrictions

Administering Agency

NSW Ministry of Health

Relevant Legislation

Smoke-free Environment Regulation 2016

Smoke-free Environment Act 2000

Public Health (Tobacco) Act 2008

26. Subdivision of Buildings

Administering Agency

Department of Customer Service

Relevant Legislation

Conveyancing Act 1919

Conveyancing (General) Regulation 2013

Strata Scheme Development Act 2015

Strata Scheme Development Regulation 2016

Community Land Development Act 2021

Community Land Development Regulation 2021

27. Swimming Pool Fences

Administering Agency

Department of Customer Service

Relevant Legislation

Swimming Pools Act 1992

Swimming Pools Regulation 2018

28. Temporary Structures

Administering Agency

Department of Planning and Environment

Relevant Legislation

Environmental Planning and Assessment Act 1979

Environmental Planning and Assessment Regulation 2021

Environmental Planning and Assessment (Development Certification and Fire Safety) Regulation 2021

Schedule 6 Northern Territory

Introduction

Section B **Structure**

Part B1	Structural provisions
NT B1D4	Determination of structural resistance of materials and forms of construction
Specification 4	Design of buildings in cyclonic areas
NT S4C3	Strengthened area

Section E **Services and equipment**

Part E1	Fire fighting equipment
NT E1D10	Where sprinklers are required: Class 9a and 9c buildings

Section F **Health and amenity**

Specification 28	Sound insulation for building elements
NT S28C1	Scope
NT S28C2	Construction deemed-to-satisfy
NT S28C3	R_W applicable to construction
Specification 29	Impact sound – test of equivalence
NT S29C1	Scope
NT S29C2	Construction to be tested
NT S29C3	Method

NT Part F7 **Sound transmission and insulation**

Performance Requirements

NT F7P1	Sound transmission through floors
NT F7P2	Sound transmission through walls
NT F7P3	Sound transmission through wall and floor penetrations
NT F7P4	Sound transmission through walls in residential care buildings

Deemed-to-Satisfy Provisions

NT F7D1	Deemed-to-Satisfy Provisions
NT F7D2	Application of Part
NT F7D3	Weighted sound reduction index: interpretation
NT F7D4	Sound insulation of floors between units
NT F7D5	Sound insulation of walls between units
NT F7D6	Walls between a bathroom, sanitary compartment, laundry or kitchen and a habitable room in adjoining unit
NT F7D7	Soil and waste pipes to be separated
NT F7D8	Isolation of pumps
NT F7D9	Walls between a bedroom and kitchen or laundry in a Class 9c building

Section G **Ancillary provisions**

Part G1	Minor structures and components
NT G1P1	Swimming pool drainage
NT G1P2	Swimming pool access and water recirculation systems
NT G1D2	Swimming pools

Section J	**Energy efficiency**	
	NT Part J1	Energy efficiency performance requirements
	NT Part J2	Energy efficiency
	NT Part J3	Elemental provisions for a sole-occupancy unit of a Class 2 building or a Class 4 part of a building
	NT Part J4	Building fabric
	NT Part J5	Building sealing
	NT Part J6	Air-conditioning and ventilation
	NT Part J7	Artificial lighting and power
	NT Part J8	Heated water supply and swimming pool and spa pool plant
	NT Part J9	Energy monitoring and on-site distributed energy resources
Schedule 2	**Referenced documents**	

Footnote: Other legislation affecting buildings

NT Introduction

This Appendix contains variations and additions to the Building Code of Australia (BCA) provisions which are considered necessary for the effective application of the Code in the Northern Territory.

Section B Structure

Part B1 Structural provisions

Delete B1D4 and insert NT B1D4 as follows:

NT B1D4 Determination of structural resistance of materials and forms of construction

[2019: NT B1.4(i)]

The structural resistance of materials and forms of construction must be determined in accordance with the following, as appropriate:

(a) Masonry (including masonry-veneer, unreinforced masonry and reinforced masonry): AS 3700, except—

(i) '(for piers—isolated or engaged)' is removed from Clause 8.5.1(d); and

(ii) where Clause 8.5.1 requires design as for unreinforced masonry in accordance with Section 7, the member must also be designed as unreinforced masonry in accordance with Tables 10.3 and 4.1(a)(i)(C) of AS 3700.

(b) Concrete:

(i) Concrete construction (including reinforced and prestressed concrete): AS 3600.

(ii) Autoclaved aerated concrete: AS 5146.1.

(iii) Post-installed and cast-in fastenings: AS 5216.

(c) Steel construction:

(i) Steel structures: AS 4100.

(ii) Cold-formed steel structures: AS/NZS 4600.

(iii) Residential and low-rise steel framing: NASH Standard – Residential and Low-Rise Steel Framing Part 1 or Part 2.

(d) Composite steel and concrete: AS/NZS 2327.

(e) Aluminium construction: AS/NZS 1664.1 or AS/NZS 1664.2.

(f) Timber construction:

(i) Design of timber structures: AS 1720.1.

(ii) Timber structures: AS 1684.2, AS 1684.3 or AS 1684.4.

(iii) Nailplated timber roof trusses: AS 1720.5.

(g) Piling: AS 2159.

(h) Glazed assemblies:

(i) The following glazed assemblies in an *external wall* must comply with AS 2047:

(A) Windows excluding those listed in (ii).

(B) Sliding and swinging glazed doors with a frame, including french and bi-fold doors with a frame.

(C) Adjustable louvres.

(D) Shopfronts.

(E) Window walls with one piece framing.

(ii) All glazed assemblies not covered by (i) and the following glazed assemblies must comply with AS 1288:

(A) All glazed assemblies not in an *external wall*.

(B) Revolving doors.

(C) Fixed louvres.

(D) Skylights, roof lights and windows in other than the vertical plane.

(E) Sliding and swinging doors without a frame.

(F) Windows constructed on site and architectural one-off windows, which are not design tested in accordance with AS 2047.

(G) Second-hand windows, re-used windows and recycled windows.

(H) Heritage windows.

(I) Glazing used in balustrades and sloping overhead glazing.

(i) Termite Risk Management: Where a *primary building element* is subject to attack by subterranean termites—

(i) AS 3660.1 with additional protection measures to be used in areas where Mastrotermes Darwiniensis are prevalent; and

(ii) for the purposes of this provision, a *primary building element* consisting entirely of, or a combination of, any of the following materials is considered not to be subject to termite attack:

(A) Steel, aluminium or other metals.

(B) Concrete.

(C) Masonry.

(D) Fibre-reinforced cement.

(E) Timber in areas where Mastrotermes Darwiniensis are not prevalent — naturally termite resistant in accordance with Appendix C of AS 3660.1.

(F) Timber — preservative treated in accordance with Appendix D of AS 3660.1; and

(iii) where a termite risk management system in accordance with AS 3660.1 is used, a durable notice must be permanently fixed to the building in a prominent location, such as a meter box or the like, indicating—

(A) the method of termite risk management; and

(B) the date of installation of the system; and

(C) where a chemical is used, its life expectancy as listed on the *appropriate authority's* pesticides register label; and

(D) the installer's or manufacturer's recommendations for the scope and frequency of future inspections for termite activity.

(j) Roof construction (except in cyclonic areas):

(i) Roof tiling: AS 2050.

(ii) Cellulose cement corrugated sheets: AS/NZS 2908.1 with safety mesh installed in accordance with AS/NZS 1562.3 clause 2.4.3.2 except for sub-clause (g) for plastic sheeting.

(iii) Metal roofing: AS 1562.1.

(k) Garage doors and other large access doors in openings not more than 3 m in height in *external walls* of buildings determined as being located in wind region C or D in accordance with AS/NZS 1170.2: AS/NZS 4505.

(l) Lift *shafts* which are not *required* to have an FRL, must—

(i) except as required by (ii), be completely enclosed with non-perforated material between the bottom of the pit and the ceiling of the lift *shaft*, other than—

(A) at landing doors, emergency doors and pit access doors; and

(B) *low-rise, low-speed constant pressure lifts*; and

(C) *small-sized, low-speed automatic lifts*; and

(ii) in *atrium* and observation areas, be protected with non-perforated material not less than 2.5 m in height—

(A) above any places on which a person can stand, which are within 800 mm horizontal reach of any vertical moving lift component including ropes and counterweights; and

(B) at the lowest level of the *atrium* area that the lift serves, on all sides except the door opening, for not less than 2.5 m in height, by enclosure with non-perforated material; and

(iii) be of non-brittle material; and

(iv) where glazing is used—

(A) comply with Table B1D4; or

(B) not fail the deflection criteria *required* by S6C11(c)(iii).

Insert NT Table B1D4 as follows:

NT Table B1D4: Material and minimum thickness of glazing and polycarbonate sheet

Application	Lift *shaft* vision panels more than 65,000 mm^2, door panels, and lift *shafts*	Lift *shaft* vision panels less than or equal to 65,000 mm^2
Laminated glass	10 mm (0.76 mm interlayer)	6 mm (0.76 mm interlayer)
Toughened/laminated glass	10 mm (0.76 mm interlayer)	6 mm (0.76 mm interlayer)
Annealed glass with security polyester film coating	10 mm	6 mm
Safety wire glass	Not applicable	Subject to fire test
Polycarbonate sheet	13 mm	6 mm

Specification 4 Design of buildings in cyclonic areas

Insert NT S4C3 as follows:

NT S4C3 Strengthened area

[2019: Spec B1.2: NT3]

(1) Where a residential building of Class 2, 3, 9a or 9c, in Region C as defined by AS/NZS 1170.2, is designed to be used by the Aged or Infirm it shall incorporate a “strengthened area” for use as shelter during cyclonic conditions and must comply with the following criteria:

(a) The *floor area* of the “strengthened area” is to be calculated at the rate of 1.2 m^2 per person normally accommodated within the building.

(b) The design wind pressure for the overall “strengthened area” is for an Importance Level 3 building.

(c) The minimum standard of debris protection to walls, floors and ceilings (or roof) bounding the “strengthened area” shall be that which resists (without complete penetration) the impact loading specified in AS/NZS 1170.2, using a regional wind speed associated with an Importance Level 3 building.

(d) All doors, windows, vents and the like in walls bounding the “strengthened area” are to be protected against windborne debris with permanently installed screens in accordance with (c).

(e) Consideration must be given to the selection of materials and fittings to ensure doors, windows and vents can withstand the required design wind pressures.

(f) All doors serving as required entries/exits to a “strengthened area” are to be inward opening with locking devices suitably noted for use in a cyclone emergency.

(2) The term “strengthened area” is defined as the strengthening of an area to increase its potential to facilitate debris protection.

Section E Services and equipment

Part E1 Fire fighting equipment

Delete E1D10 and insert NT E1D10 as follows:

NT E1D10 Where sprinklers are required: Class 9a and 9c buildings

[2019: NT Table E1.5]

(1) In a Class 9a *health-care building* used as a *residential care building*, sprinklers are *required* throughout the building and in any *fire compartment* containing a Class 9a part used for residential care.

(2) In a Class 9a building, other than as described in (1), sprinklers are *required* if the building has more than one *storey*.

(3) In a Class 9c building, sprinklers are *required* throughout the building and in any *fire compartment* containing a Class 9c part.

Section F Health and amenity

Specification 28 Sound insulation for building elements

Delete S28C1 and insert NT S28C1 as follows:

NT S28C1 Scope

[New for 2022]

This Specification lists the weighted sound reduction index R_W for some common forms of construction.

Delete S28C2 and insert NT S28C2 as follows:

NT S28C2 Construction deemed-to-satisfy

[2019: NT Spec F5.2: 2]

The forms of construction listed in NT S28C3 are considered to have the R_W stated in that clause if installed as follows:

(a) Masonry: units must be laid with all joints filled solid, including those between the masonry and any adjoining construction.

(b) Concrete slabs: joints between concrete slabs and any adjoining construction must be filled solid.

(c) Plasterboard—

(i) if one layer is *required* under this Specification, it must be screw-fixed to the studs with joints staggered on opposite faces; and

(ii) if 2 layers are *required*, the first layer must be fixed according to (i) and the second layer must be fixed to the first layer with nails, screws or adhesive so that the joints do not coincide with those of the first layer; and

(iii) joints between sheets or between sheets and any adjoining construction must be taped and filled solid; and

(iv) fire-protective grade plasterboard must be the special grade manufactured for use in *fire-resisting* construction.

(d) Steel studs and perimeter members—

(i) the section of steel must be not less than 0.6 mm thick; and

(ii) studs must be not less than 63 mm in depth unless another depth is listed in NT S28C3; and

(iii) studs must be fixed to steel top and bottom plates of sufficient depth to permit secure fixing of the plasterboard; and

(iv) all steel members at the perimeter of the wall must be securely fixed to the adjoining structure and be bedded in resilient compound or the joints must be caulked so that there are no voids between the steel members and the wall.

Delete S28C3 and insert NT S28C3 as follows:

NT S28C3 R_W applicable to construction

[2019: NT Spec F5.2: Table 2]

(1) Construction in accordance with the following has an R_W of not less than 45:

(a) Walls — clay brickwork:

(i) 230 mm thick in one or more leaves and with a mass per unit area of not less than 290 kg/m^2.

(ii) 110 mm thick rendered 13 mm thick on both sides with a mass per unit area of the unrendered wall being not less than 190 kg/m^2.

(iii) 110 mm thick, of semi-dry-pressed bricks and rendering 13 mm on one side, the mass per unit area being not less than 215 kg/m^2.

(iv) 110 mm thick, of extruded brick and rendered 13 mm on one side, the mass per unit area being not less

than 180 kg/m^2.

(b) Walls — concrete brickwork: 110 mm thick with a mass per unit area of not less than 195 kg/m^2.

(c) Walls — concrete blockwork:

(i) 190 mm thick with a mass per unit area of not less than 215 kg/m^2.

(ii) 140 mm thick, the wall thickness of the blocks being not less than 44 mm and with—

(A) 50 mm x 50 mm timber battens spaced at not more than 610 mm centres screw-fixed on one face of the blocks into resilient plugs with rubber inserts between the battens and the wall; and

(B) the face of the battens clad with 13 mm thick standard plasterboard; and

(C) a mass per unit area of the whole system of not less than 220 kg/m^2.

(d) Walls — concrete:

(i) In-situ concrete — 125 mm thick and with a density of not less than 2200 kg/m^3.

(ii) In-situ concrete — 100 mm thick and with a density of not less than 2500 kg/m^3.

(iii) Precast concrete — 100 mm thick and without joints.

(e) Walls — steel stud walling:

(i) With 2 layers of 16 mm thick fire-protective grade plasterboard fixed to each face.

(ii) With—

(A) 1 layer of 13 mm thick fire-protective grade plasterboard fixed to one face, and before fixing, 50 mm thick mineral or glass wool blanket or batts stapled to the back of each sheet so that the sheet is completely covered; and

(B) 2 layers of 13 mm thick fire-protective grade plasterboard fixed to the other face.

(iii) With—

(A) 1 layer of 16 mm thick fire-protective grade plasterboard fixed to one face; and

(B) 50 mm thick mineral or glass wool blanket or batts wedged firmly between the studs; and

(C) 2 layers of fire-protective grade plasterboard fixed to the other face, the inner layer being 16 mm thick and the outer layer being 13 mm.

(iv) With 2 layers of 13 mm plasterboard on both sides of 75 mm studs.

(f) Floors — concrete:

(i) In-situ concrete slab — 125 mm thick and with a density of not less than 2200 kg/m^3.

(ii) In-situ concrete slab — 100 mm thick and with a density of not less than 2500 kg/m^3.

(iii) Pre-cast concrete slab — 100 mm thick and without joints.

(g) Floors — timber, comprising—

(i) timber joists not less than 175 mm x 50 mm; and

(ii) 75 mm thick mineral or glass wool blanket or batts cut to fit tightly between joists and laid on 10 mm thick plasterboard fixed to underside of joists; and

(iii) 25 mm thick mineral or glass wool blanket or batts laid over entire floor, including tops of joists before flooring is laid; and

(iv) tongued and grooved boards not less than 19 mm thick, secured to 75 mm x 50 mm battens; and

(v) the assembled flooring laid over the joists, but not fixed to them, with the battens lying between the joists.

(2) Ducts or other construction separating soil and waste pipes from units, constructed in accordance with the following, have an R_W of not less than 30:

(a) Masonry — not less than 90 mm thick.

(b) Plasterboard — 2 layers of plasterboard:

(i) Each 10 mm thick, fixed to timber studs not less than 75 mm x 50 mm and spaced at not more than 400 mm centres.

(ii) Each 13 mm thick, one on each side of steel studs not less than 50 mm deep and spaced at not more than 400 mm centres.

Specification 29 Impact sound – test of equivalence

Delete S29C1 and insert NT S29C1 as follows:

NT S29C1 Scope

[New for 2022]

This Specification describes a method of test to determine the comparative resistance of walls to the transmission of impact sound.

Delete S29C2 and insert NT S29C2 as follows:

NT S29C2 Construction to be tested

[2019: NT Spec F5.5: 2]

(1) The test is conducted on a specimen of prototype wall construction and on a specimen of one or other of the constructions specified in NT S28C3.

(2) The testing of construction specified in NT S28C3 need not be repeated for subsequent comparisons provided complete records of the results, the test equipment and the technique of testing are kept so that identical equipment can be employed and an identical technique can be adopted in the testing of specimens of prototype wall construction.

Delete S29C3 and insert NT S29C3 as follows:

NT S29C3 Method

[2019: Spec F5.5: 3]

(1) The wall constructions to be compared must be tested in accordance with AS 1191.

(2) A horizontal steel platform 510 mm x 460 mm x 10 mm thick must be placed with one long edge in continuous and direct contact with the wall to be tested on the side of the wall on which the impact sound is to be generated.

(3) A tapping machine complying with ISO 140/6 — 1998 (E) must be mounted centrally on the steel platform.

(4) The sound transmission through the wall must be determined in accordance with AS 1191 except that the tapping machine as mounted on the steel platform must be used as the source of sound.

(5) The impact sound pressure levels measured in the receiving room must be converted into normalised levels using a reference equivalent absorption area of $10m^2$.

NT Part F7 Sound transmission and insulation

Introduction to this Part

This Part is intended to reduce the likelihood of illness or loss of amenity as result of undue noise transmission between different parts of a building or adjoining buildings. This part contains minimum requirements for sound insulation for walls, floors and penetrations through walls and floors for services such as pipework.

Performance Requirements

NT F7P1 Sound transmission through floors

[2019: NT FP5.1]

Floors separating *sole-occupancy units* must provide insulation against the transmission of airborne and impact generated sound sufficient to prevent illness or loss of amenity to the occupants.

Applications

NT F7P1 only applies to a Class 2 or 3 building or a Class 9c building.

NT F7P2 Sound transmission through walls

[2019: NT FP5.2]

Walls separating—

(a) *sole-occupancy units*; or

(b) a *sole-occupancy unit* from a plant room, lift *shaft*, stairway, *public corridor*, public lobby or the like,

must provide sufficient insulation against the transmission or airborne or impact generated sound sufficient to prevent illness or loss of amenity to the occupants.

Applications

NT F7P2 only applies to a Class 2 or 3 building.

NT F7P3 Sound transmission through wall and floor penetrations

[2019: NT FP5.3]

The *required* sound insulation of floors and walls must not be compromised by the incorporation or penetration of a pipe or other service element.

Applications

NT F7P3 only applies to a Class 2 or 3 building or a Class 9c building.

NT F7P4 Sound transmission through walls in residential care buildings

[2019: NT FP5.4]

(1) Walls separating—

(a) *sole-occupancy units*; or

(b) a *sole-occupancy unit* from a kitchen, bathroom, *sanitary compartment* (not being an associated ensuite), laundry, plant room or utilities room,

must provide insulation against the transmission of airborne sound sufficient to prevent illness or loss of amenity to the occupants.

(2) Wall separating a *sole-occupancy unit* from a kitchen or laundry, must provide insulation against the transmission of impact generated sound sufficient to prevent illness or loss of amenity to the occupants.

Applications

NT F7P4 only applies to a Class 9c building.

Deemed-to-Satisfy Provisions

NT F7D1 Deemed-to-Satisfy Provisions

[2019: NT F5.0]

(1) Where a *Deemed-to-Satisfy Solution* is proposed, *Performance Requirements* F7P1 to F7P4 are satisfied by complying with NT F7D2 to NT F7D9.

(2) Where a *Performance Solution* is proposed, the relevant *Performance Requirements* must be determined in accordance with A2G2(3) and A2G4(3) as applicable.

NT F7D2 Application of Part

[2019: NT F5.1]

The *Deemed-to-Satisfy Provisions* of this Part apply to Class 2 and 3 buildings and Class 9c *aged care buildings*.

NT F7D3 Weighted sound reduction index: interpretation

[2019: NT F5.2]

A form of construction *required* to have a certain weighted sound reduction index (R_W) must—

(a) have the *required* value determined under AS/NZS ISO 717.1; or

(b) comply with NT Specification 28.

NT F7D4 Sound insulation of floors between units

[2019: NT F5.3]

A floor separating *sole-occupancy units* must have an R_W not less than 45.

NT F7D5 Sound insulation of walls between units

[2019: NT F5.4]

A wall must have an R_W not less than 45 if it separates—

(a) *sole-occupancy units*; or

(b) a *sole-occupancy unit* not within a Class 9c building from a plant room, lift *shaft*, stairway, *public corridor*, hallway or the like; or

(c) a *sole-occupancy unit* in a Class 9c building from a kitchen, bathroom, *sanitary compartment* (not being an associated ensuite), laundry, plant room or utilities room.

NT F7D6 Walls between a bathroom, sanitary compartment, laundry or kitchen and a habitable room in adjoining unit

[2019: NT F5.5 and NT Table F5.5]

(1) Except for a Class 9c building, a wall separating a bathroom, *sanitary compartment*, laundry or kitchen in one *sole-occupancy unit* from a *habitable room* (other than a kitchen) in an adjoining unit must—

(a) have an R_W of not less than 50; and

(b) provide satisfactory insulation against impact sound; and

(c) not incorporate a duct which reduces the R_W of the wall to less than 50.

(2) A wall satisfies (1)(a) and (b) if it is—

(a) in accordance with (3); or

(b) for other than masonry, in 2 or more separate leaves without rigid mechanical connection except at their periphery; or

(c) identical to a prototype that is no less resistant to the transmission of impact sound when tested in accordance with NT Specification 29 than a wall listed in (3).

(3) For the purposes of (2)(a) and (c), the construction of walls to reduce the transmission of impact sound must be as follows:

(a) Cavity brickwork: two leaves of 90 mm brick masonry with—

(i) all joints filled solid with mortar; and

(ii) an air space not less than 40 mm between the leaves; and

(iii) the leaves connected only by ties in accordance with AS 3700.

(b) Single leaf brickwork: 110 mm thick brick masonry with—

(i) each face rendered 13 mm thick; and

(ii) 50 mm x 12 mm thick timber battens at not more than 610 mm centres fixed to each face but not recessed into the render; and

(iii) one layer of 12 mm thick softboard nailed to the battens; and

(iv) 6 mm thick medium density hardboard adhesive-fixed to the softboard.

(c) Concrete blockwork: 190 mm thick concrete block masonry with—

(i) each face of the blocks fitted with 50 mm x 50 mm timber battens, spaced at not more than 610 mm centres, screw-fixed into resilient plugs with rubber inserts; and

(ii) the space between the battens completely filled with mineral or glass wool blanket or batts not less than 50 mm thick; and

(iii) the outer face of the battens finished with plasterboard not less than 10 mm thick or other material with a mass per unit area not less than 7.3 kg/m^2.

NT F7D7 Soil and waste pipes to be separated

[2019: NT F5.6]

If a soil or waste pipe, including a pipe that is embedded in or passes through a floor, serves or passes through more than one *sole-occupancy unit*—

(a) the pipe must be separated from the rooms of any *sole-occupancy unit* by construction with an R_W not less than—

(i) 45 if the adjacent room is a *habitable room* (other than a kitchen); or

(ii) 30 if the adjacent room is a kitchen or any other room; and

(b) a door or panel provided access to the pipe must not open into any *habitable room* (other than a kitchen); and

(c) an access door or panel in any other part must be firmly fixed so as to overlap the frame or rebate of the frame by not less than 10 mm, be fitted with a sealing gasket along all edges and be constructed of—

(i) wood, particleboard or blockboard not less than 38 mm thick; or

(ii) compressed fibre reinforced cement sheeting not less than 9 mm thick; or

(iii) other suitable material with a mass per unit area not less than 24.4 kg/m^2.

NT F7D8 Isolation of pumps

[2019: NT F5.7]

A flexible coupling must be used at the point of connection between the service pipes in a building and any circulating or other pump.

NT F7D9 Walls between a bedroom and kitchen or laundry in a Class 9c building

[2019: NT F5.8]

In addition to NT F7D5, a wall separating a *sole-occupancy unit* in a Class 9c building from a kitchen or laundry must—

(a) for other than masonry, be two or more separate leaves without rigid mechanical connection except at their periphery; or

(b) be identical with a prototype that is no less resistant to the transmission of impact sound when tested in accordance with NT Specification 29 than a wall listed in NT S28C3.

Section G Ancillary provisions

Part G1 Minor structures and components

Delete G1P1 and insert NT G1P1 as follows:

NT G1P1 Swimming pool drainage

This clause has deliberately been left blank.

Delete G1P2 and insert NT G1P2 as follows:

NT G1P2 Swimming pool access and water recirculation systems

[2019: NT GP1.2]

A *swimming pool* water recirculation system must incorporate safety measures to avoid entrapment of, or injury to, a person.

Applications

NT G1P2 only applies to a *swimming pool* with a depth of water more than 300 mm.

Delete G1D2 and insert NT G1D2 as follows:

NT G1D2 Swimming pools

This clause has deliberately been left blank.

Barriers and fences for swimming pools are regulated by the Northern Territory of Australia Swimming Pool Safety Act 2004.

Section J Energy efficiency

NT Part J1 Energy efficiency performance requirements

For a Class 2 building and Class 4 part of a building, Section J is replaced with Section J of BCA 2009. For Class 3 and Class 5-9 buildings, Section J of NCC 2022 does not apply and from 1 October 2023 Section J of NCC 2019 applies.

NT Part J2 Energy efficiency

For a Class 2 building and Class 4 part of a building, Section J is replaced with Section J of BCA 2009. For Class 3 and Class 5-9 buildings, Section J of NCC 2022 does not apply and from 1 October 2023 Section J of NCC 2019 applies.

NT Part J3 Elemental provisions for a sole-occupancy unit of a Class 2 building or a Class 4 part of a building

For a Class 2 building and Class 4 part of a building, Section J is replaced with Section J of BCA 2009. For Class 3 and Class 5-9 buildings, Section J of NCC 2022 does not apply and from 1 October 2023 Section J of NCC 2019 applies.

NT Part J4 Building fabric

For a Class 2 building and Class 4 part of a building, Section J is replaced with Section J of BCA 2009. For Class 3 and Class 5-9 buildings, Section J of NCC 2022 does not apply and from 1 October 2023 Section J of NCC 2019 applies.

NT Part J5 Building sealing

For a Class 2 building and Class 4 part of a building, Section J is replaced with Section J of BCA 2009. For Class 3 and Class 5-9 buildings, Section J of NCC 2022 does not apply and from 1 October 2023 Section J of NCC 2019 applies.

NT Part J6 Air-conditioning and ventilation

For a Class 2 building and Class 4 part of a building, Section J is replaced with Section J of BCA 2009. For Class 3 and Class 5-9 buildings, Section J of NCC 2022 does not apply and from 1 October 2023 Section J of NCC 2019 applies.

NT Part J7 Artificial lighting and power

For a Class 2 building and Class 4 part of a building, Section J is replaced with Section J of BCA 2009. For Class 3 and Class 5-9 buildings, Section J of NCC 2022 does not apply and from 1 October 2023 Section J of NCC 2019 applies.

NT Part J8 Heated water supply and swimming pool and spa pool plant

For a Class 2 building and Class 4 part of a building, Section J is replaced with Section J of BCA 2009. For Class 3 and Class 5-9 buildings, Section J of NCC 2022 does not apply and from 1 October 2023 Section J of NCC 2019 applies.

NT Part J9 Energy monitoring and on-site distributed energy resources

For a Class 2 building and Class 4 part of a building, Section J is replaced with Section J of BCA 2009. For Class 3 and Class 5-9 buildings, Section J of NCC 2022 does not apply and from 1 October 2023 Section J of NCC 2019 applies.

Schedule 2 Referenced documents

Insert NT Table 1 as follows:

NT Table 1: Schedule of referenced documents

No.	Date	Title	Volume One	Volume Two	Housing Provisions
AS/NZS 1170 Part 2	2011	Structural design actions: Wind actions Amdt 1, 2, 3, 4 and 5	NT S4C3	N/A	N/A
AS 2047	2014	Windows and external glazed doors in buildings (incorporating amendments 1 and 2) See Note	B1D4, F3V1, F3D4	H1D8, H2V1	NT 13.4.4
AS 3660 Part 1	2014	Termite management: New building work	NT B1D4	N/A	NT 3.4.1(2), NT 3.4.2
AS 4254 Part 1	2012	Ductwork for air handling systems in buildings — Flexible duct	N/A	N/A	NT 13.7.4
AS 4254 Part 2	2012	Ductwork for air handling systems in buildings — Rigid duct	Spec 7	N/A	NT 13.7.4
AS/NZS 4859.1	2018	Thermal insulation materials for buildings — General criteria and technical provisions	N/A	N/A	NT 13.2.2, NT 13.7.4
BCA 2009	May 2009	Building Code of Australia	NT Section J	N/A	N/A
BCA 2019	May 2009	Building Code of Australia	NT Section J	N/A	N/A

Table Notes

For AS 2047:

(a) Tests carried out under earlier editions of AS 2047 remain valid.

(b) Reports based on AS 2047 relating to tests carried out after the NCC reference date for AS 2047—2014 Amendment 2 must relate to the amended Standard.

NT Footnote: Other legislation affecting buildings

In addition to any applicable provisions of the Building Act, Building Regulations and this Code, there are a number of other legislative technical requirements affecting the design, construction and/or performance of buildings that practitioners may need to be aware of, including, but not necessarily limited to, the following list. Additional legislative instruments such as regulations, codes and standards may exist under the legislation listed.

1. Accommodation/Food Premises/Skin Penetration Activities/Mortuaries

Administering Agency

Department of Health

Relevant Legislation

Public and Environmental Health Act

Public and Environmental Health Regulations

Food Act

2. Child Care

Administering Agency

Department of Education

Relevant Legislation

Education and Care Services National Law

Education and Care Services National Regulations

3. Crown Land

Administering Agency

Department of Infrastructure, Planning and Logistics

Relevant Legislation

Crown Lands Act

4. Dangerous Goods and Gas Installations

Administering Agency

Department of Attorney-General and Justice (NT Worksafe)

Relevant Legislation

Dangerous Goods Act

5. Electrical Installations

Administering Agency

Department of Attorney-General and Justice (NT Worksafe)

Relevant Legislation

Electrical Workers and Contractors Act

Electricity Reform Act

Electricity Reform (Safety and Technical) Regulations

6. Fences — dividing

Administering Agency

Department of Attorney-General and Justice (NT Worksafe)

Relevant Legislation

Fences Act

7. Fire Prevention

Administering Agency

Northern Territory Fire and Rescue Service

Relevant Legislation

Fire and Emergency Act

8. Historic Buildings

Administering Agency

Department of Tourism and Culture

Relevant Legislation

Heritage Act

9. Liquor — licensing

Administering Agency

Department of Attorney-General and Justice

Relevant Legislation

Liquor Act

10. Occupational Health and Safety

Administering Agency

Department of Attorney-General and Justice (NT Worksafe)

Relevant Legislation

Work health and Safety (National Uniform Legislation) Act

11. Planning Controls

Administering Agency

Department of Infrastructure, Planning and Logistics

Relevant Legislation

Planning Act

12. Plumbing Installations

Administering Agency

Department of Infrastructure, Planning and Logistics

Department of Attorney-General and Justice

Relevant Legislation

Building Act

Building Regulations

Plumbers and Drainers Licensing Act

13. Stormwater Drainage (Municipal Roads)

Administering Agency

Council or Municipality in which building is located

Relevant Legislation

Local Government Act

14. Stormwater Drainage (Territory Roads)

Administering Agency

Department of Infrastructure, Planning and Logistics

Relevant Legislation

Control of Roads Act

15. Swimming Pools

Administering Agency

Department of Infrastructure, Planning and Logistics

Relevant Legislation

Swimming Pool Safety Act

16. Water Supply and Sewage Services

Administering Agency

Power and Water Corporation

Relevant Legislation

Water Supply and Sewerage Services Act

Water Supply and Sewerage Services Regulations

Schedule 7 Queensland

Introduction

Section B **Structure**

Part B1	Structural provisions
QLD B1P4	Buildings in flood areas
QLD B1D4	Determination of structural resistance of materials and forms of construction
QLD B1D6	Construction of buildings in flood hazard areas

Section G **Ancillary provisions**

Part G1	Minor structures and components
QLD G1P2	Swimming pool access and water recirculation systems
QLD G1D2	Swimming pools
Part G5	Construction in bushfire prone areas
QLD G5P1	Bushfire resistance
QLD G5D2	Application of Part

Schedule 1 **Definitions**

Schedule 2 **Referenced documents**

Footnote: Other legislation affecting buildings

QLD Introduction

This Appendix contains variations and additions to the Building Code of Australia (BCA) provisions which are considered necessary for the effective application of the Code in Queensland and shall be treated as amendments to the Code.

Section B Structure

Part B1 Structural provisions

Delete B1P4 and insert QLD B1P4 as follows:

QLD B1P4 Buildings in flood areas

This clause has deliberately been left blank.

Building work in designated flood areas is regulated by the Building Act 1975 and the Queensland Development Code 3.5 - Construction of buildings in flood hazard areas

Delete B1D4 and insert QLD B1D4 as follows:

QLD B1D4 Determination of structural resistance of materials and forms of construction

[2019: QLD B1.4(f)(v)]

The structural resistance of materials and forms of construction must be determined in accordance with the following, as appropriate:

(a) Masonry (including masonry-veneer, unreinforced masonry and reinforced masonry): AS 3700, except—

(i) '(for piers—isolated or engaged)' is removed from Clause 8.5.1(d); and

(ii) where Clause 8.5.1 requires design as for unreinforced masonry in accordance with Section 7, the member must also be designed as unreinforced masonry in accordance with Tables 10.3 and 4.1(a)(i)(C) of AS 3700.

(b) Concrete:

(i) Concrete construction (including reinforced and prestressed concrete): AS 3600.

(ii) Autoclaved aerated concrete: AS 5146.1.

(iii) Post-installed and cast-in fastenings: AS 5216.

(c) Steel construction:

(i) Steel structures: AS 4100.

(ii) Cold-formed steel structures: AS/NZS 4600.

(iii) Residential and low-rise steel framing: NASH Standard – Residential and Low-Rise Steel Framing Part 1 or Part 2.

(d) Composite steel and concrete: AS/NZS 2327.

(e) Aluminium construction: AS/NZS 1664.1 or AS/NZS 1664.2.

(f) Timber construction:

(i) Design of timber structures: AS 1720.1.

(ii) Timber structures: AS 1684.2, AS 1684.3 or AS 1684.4.

(iii) Nailplated timber roof trusses: AS 1720.5.

(iv) Timber used for structural purposes: a species scheduled for the appropriate use in Schedules A, B or C of Book 2 of the 'Queensland Government, Department of Agriculture, Fisheries and Forestry - Construction timbers in Queensland, Book 1 and Book 2 - Properties and specifications for satisfactory performance of construction timbers in Queensland - Class 1 and 10 buildings (Houses, carports, garages, greenhouses and sheds)'.

(g) Piling: AS 2159.

(h) Glazed assemblies:

(i) The following glazed assemblies in an *external wall* must comply with AS 2047:

(A) Windows excluding those listed in (ii).

(B) Sliding and swinging glazed doors with a frame, including french and bi-fold doors with a frame.

(C) Adjustable louvres.

(D) Shopfronts.

(E) Window walls with one piece framing.

(ii) All glazed assemblies not covered by (i) and the following glazed assemblies must comply with AS 1288:

(A) All glazed assemblies not in an *external wall*.

(B) Revolving doors.

(C) Fixed louvres.

(D) Skylights, roof lights and windows in other than the vertical plane.

(E) Sliding and swinging doors without a frame.

(F) Windows constructed on site and architectural one-off windows, which are not design tested in accordance with AS 2047.

(G) Second-hand windows, re-used windows and recycled windows.

(H) Heritage windows.

(I) Glazing used in balustrades and sloping overhead glazing.

(i) Termite Risk Management: Where a *primary building element* is subject to attack by subterranean termites: AS 3660.1, and—

(i) for the purposes of this provision, a *primary building element* consisting entirely of, or a combination of, any of the following materials is considered not subject to termite attack:

(A) Steel, aluminium or other metals.

(B) Concrete.

(C) Masonry.

(D) Fibre-reinforced cement.

(E) Timber — naturally termite resistant in accordance with Appendix C of AS 3660.1.

(F) Timber — preservative treated in accordance with Appendix D of AS 3660.1; and

(ii) a durable notice must be permanently fixed to the building in a prominent location, such as a meter box or the like, indicating—

(A) the termite management system used; and

(B) the date of installation of the system; and

(C) where a chemical is used, its life expectancy as listed on the *appropriate authority's* pesticides register label; and

(D) the installer's or manufacturer's recommendations for the scope and frequency of future inspections for termite activity.

(j) Roof construction (except in cyclonic areas):

(i) Roof tiling: AS 2050.

(ii) Cellulose cement corrugated sheets: AS/NZS 2908.1 with safety mesh installed in accordance with AS/NZS 1562.3 clause 2.4.3.2 except for sub-clause (g) for plastic sheeting.

(iii) Metal roofing: AS 1562.1.

(k) Particleboard structural flooring: AS 1860.2.

(l) Garage doors and other large access doors in openings not more than 3 m in height in *external walls* of buildings determined as being located in wind region C or D in accordance with AS/NZS 1170.2: AS/NZS 4505.

(m) Lift *shafts* which are not *required* to have an FRL, must—

(i) except as required by (ii), be completely enclosed with non-perforated material between the bottom of the pit and the ceiling of the lift *shaft*, other than—

(A) at landing doors, emergency doors and pit access doors; and

(B) *low-rise, low-speed constant pressure lifts*; and

(C) *small-sized, low-speed automatic lifts*; and

(ii) in *atrium* and observation areas, be protected with non-perforated material not less than 2.5 m in height—

(A) above any places on which a person can stand, which are within 800 mm horizontal reach of any vertical moving lift component including ropes and counterweights; and

(B) at the lowest level of the *atrium* area that the lift serves, on all sides except the door opening, for not less than 2.5 m in height, by enclosure with non-perforated material; and

(iii) be of non-brittle material; and

(iv) where glazing is used—

(A) comply with Table B1D4; or

(B) not fail the deflection criteria *required* by S6C11(c)(iii).

Insert QLD Table B1D4 as follows:

QLD Table B1D4: Material and minimum thickness of glazing and polycarbonate sheet

Application	Lift *shaft* vision panels more than 65,000 mm^2, door panels, and lift *shafts*	Lift *shaft* vision panels less than or equal to 65,000 mm^2
Laminated glass	10 mm (0.76 mm interlayer)	6 mm (0.76 mm interlayer)
Toughened/laminated glass	10 mm (0.76 mm interlayer)	6 mm (0.76 mm interlayer)
Annealed glass with security polyester film coating	10 mm	6 mm
Safety wire glass	Not applicable	Subject to fire test
Polycarbonate sheet	13 mm	6 mm

Delete B1D6 and insert QLD B1D6 as follows:

QLD B1D6 Construction of buildings in flood hazard areas

This clause has deliberately been left blank.

Building work in designated flood hazard areas is regulated by the Building Act 1975, and the Queensland Development Code 3.5 - Construction of buildings in flood hazard areas.

Section G Ancillary provisions

Part G1 Minor structures and components

Delete G1P2 and insert QLD G1P2 as follows:

QLD G1P2 Swimming pool access and water recirculation systems

[2019: QLD GP1.2]

A *swimming pool* water recirculation system must incorporate safety measures to avoid entrapment of, or injury to, a person.

Applications

QLD G1P2 only applies to a *swimming pool* with a depth of water more than 300 mm.

Delete G1D2 and insert QLD G1D2 as follows:

QLD G1D2 Swimming pools

This clause has deliberately been left blank.

Barriers and fences for swimming pools are regulated by the Building Act 1975 and the Building Regulation 2006.

Part G5 Construction in bushfire prone areas

Delete G5P1 and insert QLD G5P1 as follows:

QLD G5P1 Bushfire resistance

[2019: QLD GP5.1]

A building that is constructed in a *designated bushfire prone area* must be designed and constructed to—

(a) reduce the risk of ignition from a *design bushfire* with an annual exceedance probability not more than 1:100 years, or 1:200 years for a Class 9 building; and

(b) take account of the assessed duration and intensity of the *fire actions* of the *design bushfire*; and

(c) be designed to prevent internal ignition of the building and its contents; and

(d) maintain the structural integrity of the building for the duration of the *design bushfire*.

Applications

G5P1 applies in a *designated bushfire prone area* to—

(a) a Class 2 or 3 building; and

(b) a Class 9a *health-care building*; and

(c) a Class 9b—

(i) *early childhood centre*; and

(ii) primary or secondary *school*; and

(d) a Class 9c *residential care building*; and

(e) a Class 10a building or deck immediately adjacent or connected to a building of a type listed in (a) to (d)

but does not apply when the classified vegetation is Group F rainforest (excluding wet sclerophyll forest types), mangrove communities and grasslands under 300 mm high.

Delete G5D2 and insert QLD G5D2 as follows:

QLD G5D2 Application of Part

[2019: QLD G5.1]

(1) The *Deemed-to-Satisfy Provisions* of this Part apply in a *designated bushfire prone area* to—

(a) a Class 2 or 3 building; or

(b) a Class 9a *health-care building*; or

(c) a Class 9b—

(i) an *early childhood centre*; or

(ii) a primary or secondary *school*; or

(d) a Class 9c *residential care building*; or

(e) a Class 10a building or deck associated with a building of a type listed in (a) to (d).

(2) The *Deemed-to-Satisfy Provisions* of this Part do not apply when the classified vegetation is Group F rainforest (excluding wet sclerophyll forest types), mangrove communities and grasslands under 300 mm high.

Schedule 1 Definitions

Primary building element

For the purposes of—

(1) Volume One, a member of a building designed specifically to take part of the loads specified in B1D3 and includes roof, ceiling, floor, stairway or ramp and wall framing members including bracing members designed for the specific purpose of acting as a brace to those members; or

(2) Volume Two—

(a) A member of a building specifically designed to take part of the building loads and includes roof, ceiling, floor, stairway or ramp and wall framing members including bracing members designed for the specific purpose of acting as a brace to those members; and

(b) door jambs, window frames and reveals, architraves and skirtings.

Explanatory Information

The loads to which a building may be subjected are dead, live, wind, snow and earthquake loads. Further information on building loads can be found in the AS 1170 series of Standards.

Schedule 2 Referenced documents

Insert QLD Table 1 as follows:

QLD Table 1: Schedule of referenced documents

No.	Date	Title	Volume One	Volume Two	Housing Provisions
BCA 2009	May 2009	Building Code of Australia	QLD Section J	N/A	N/A
N/A	December 2017	Queensland Government, Department of Agriculture, Fisheries and Forestry – Construction timbers in Queensland: Book 1 and Book 2: Properties and specifications for satisfactory performance of construction timbers in Queensland – Class 1 and 10 buildings (Houses, carports, garages, greenhouses and sheds)	QLD B1D4	QLD H1D6	N/A
N/A	N/A	Building Act 1975	N/A	QLD H7P1, QLD H7D2	N/A
		Queensland Development Code MP 4.1 – Sustainable buildings	Section J	Part H6	Section 13

QLD Footnote: Other legislation affecting buildings

All legislative technical requirements affecting the design, construction and/or performance of buildings are consolidated into the Building Act 1975 and other legislative instruments under that Act, such as regulations, codes (including this Code) and standards. Building work for the energy efficiency of Class 2 buildings is also regulated by the Queensland Development Code MP 4.1-Sustainable buildings.

Schedule 8 South Australia

Introduction

Section A Governing requirements

Part A6	Building classification
SA A6G7	Class 6 buildings

Section B Structure

Part B1	Structural provisions
SA B1P4	Buildings in flood areas
SA B1D6	Construction of buildings in flood hazard areas

Section C Fire resistance

Part C2	Fire resistance and stability
C2D2	Type of construction required
SA C2D16	Class 7b bulk grain storage facilities
Part C3	Compartmentation and separation
SA C3D16	Class 2 external walls exposed to brush fences
SA C3D17	Bulk grain storage facilities
Part C4	Protection of openings
SA C4D18	Protection of openings – bulk grain storage facilities

Section D Access and egress

Part D2	Provision for escape
D2D3	Number of exits required
D2D4	When fire-isolated stairways and ramps are required
D2D5	Exit travel distances
SA D2D6	Distance between alternative exits
D2D14	Travel by non-fire-isolated stairways or ramps
D2D21	Plant rooms, lift machine rooms and electricity network substa-tions: Concession
Part D3	Construction of exits
SA D3D16	Thresholds
SA D3D23	Fixed platforms, walkways, stairways and ladders
D3D25	Swinging doors
Part D4	Access for people with a disability
D4D2	General building access requirements
SA D4D5	Exemptions

Section E Services and equipment

Part E1	Fire fighting equipment
E1D2	Fire hydrants
E1D3	Fire hose reels
E1D14	Portable fire extinguishers
Part E2	Smoke hazard management
E2D1	Deemed-to-Satisfy Provisions
SA E2D22	Smoke venting in bulk grain storage facilities
Part E4	Visibility in an emergency, exit signs and warning systems

	SA E4D2	Emergency lighting requirements
	SA E4D5	Exit signs
	SA E4D8	Design and operation of exit signs
Section F	**Health and amenity**	
	Part F1	Surface water management, rising damp and external water-proofing
	SA F1P4	Rising damp
	F1D1	Deemed-to-Satisfy Provisions
	F1D6	Damp-proofing
	SA F1D7	Damp-proofing of floors on the ground
	Part F2	Wet areas and overflow protection
	SA F2P1	Wet area overflows
	SA F2P3	Prevention of surface water accumulation
	F2D2	Wet area construction
	SA F2D4	Provision of floor wastes
	Part F4	Sanitary and other facilities
	F4D6	Accessible unisex sanitary compartments
	F4D7	Accessible unisex showers
	Part F6	Light and ventilation
	SA F6D6	Ventilation of rooms
Section G	**Ancillary provisions**	
	Part G1	Minor structures and components
	SA G1P2	Swimming pool access and water recirculation systems
	SA G1D2	Swimming pools
	Part G5	Construction in bushfire prone areas
	G5D1	Deemed-to-Satisfy Provisions
	SA G5D5	Bushfire attack levels
SA Part G8	**Access for maintenance**	
	Objectives	
	SA G8O1	Objective
	Functional Statements	
	SA G8F1	Window cleaning
	SA G8F2	Hazardous conditions
	Performance Requirements	
	SA G8P1	Window cleaning
	SA G8P2	Hazardous conditions
	Deemed-to-Satisfy Provisions	
	SA G8D1	Deemed-to-Satisfy Provisions
	SA G8D2	Application of Part
	SA G8D3	Access for window cleaning
	SA G8D4	Access for inspection and maintenance between buildings
SA Part G9	**Miscellaneous provisions**	
	Performance Requirements	
	SA G9P1	Attachments to buildings
	Deemed-to-Satisfy Provisions	

	SA G9D1	Deemed-to-Satisfy Provisions
	SA G9D2	Application of Part
	SA G9D3	Attachments to buildings
Section I	**Special use buildings**	
SA Part I3	**Farm buildings**	
	Deemed-to-Satisfy Provisions	
	SA I3D1	Application of Part
Schedule 1	**Definitions**	
Schedule 2	**Referenced documents**	
Footnote: Other legislation affecting buildings		

SA Introduction

This Appendix contains variations and additions to the BCA provisions which are considered necessary for the effective application of the Code in South Australia.

These variations and additions are to be treated as amendments to the BCA and apply to the construction or alteration of all buildings requiring approval under the Planning, Development and Infrastructure Act 2016 and the Planning, Development and Infrastructure (General) Regulations 2017.

Section A Governing requirements

Part A6 Building classification

Delete A6G7 and insert SA A6G7 as follows:

SA A6G7 Class 6 buildings

[2019: SA A6.6]

A Class 6 building is a shop or other building for the sale of goods by retail or the supply of services direct to the public, including—

(a) an eating room, cafe, restaurant, milk or soft drink bar; or

(b) a dining room, bar, shop or kiosk part of a hotel or motel; or

(c) a hairdresser's or barber's shop, public laundry, or undertaker's establishment; or

(d) market or sale room, showroom, or *service station*; or

(e) a *small arts venue*.

Section B Structure

Part B1 Structural provisions

Delete B1P4 and insert SA B1P4 as follows:

SA B1P4 Buildings in flood areas

This clause has deliberately been left blank.

Delete B1D6 and insert SA B1D6 as follows:

SA B1D6 Construction of buildings in flood hazard areas

This clause has deliberately been left blank.

Section C Fire resistance

Part C2 Fire resistance and stability

C2D2 Type of construction required

[2019: C1.1]

Delete C2D2(1) and insert SA C2D2(1) as follows:

(1) The minimum Type of *fire-resisting construction* of a building must be determined in accordance with Table C2D2, except as allowed for—

(a) certain Class 2, 3 or 9c buildings, in C2D6; and

(b) a Class 4 part of a building located on the top storey, in C2D4(2); and

(c) *open spectator stands* and indoor sports stadiums, in C2D8; and

(d) Class 2 buildings located within 3 m of a *brush fence* and Class 10b *brush fences* located within 3 m of a Class 2 building, in SA C2D2(3) and (4); and

(e) a Class 7b *bulk grain storage facility* in SA C2D16.

Insert subclause SA C2D2(3) in clause C2D2 as follows:

(3) In addition to the minimum *fire-resisting construction* requirements of Table C2D2 and Specification 5 a Class 2 building must not be constructed within 3 m of a Class 10b *brush fence* unless any part of the building within 3 m of the *brush fence* complies with the *fire-resisting* requirements of SA C2D16.

Insert subclause SA C2D2(4) in clause C2D2 as follows:

(4) A Class 10b *brush fence* must not be constructed within 3 m of a Class 2 building unless any part of the building within 3 m of the *brush fence* complies with the *fire-resisting construction* requirements of SA C3D16.

Insert SA C2D16 as follows:

SA C2D16 Class 7b bulk grain storage facilities

[2019: SA C1.15]

The *external walls* of a *bulk grain storage facility* need not be of *fire-resisting construction* if—

(a) The *external walls* are 3 m or more from an allotment boundary and more than 6 m from any other building on the same allotment, other than a Class 10 building; and

(b) a fire separation space of not less than 2 m is provided between *cell type silos*; and

(c) the *external walls* are—

(i) of *non-combustible* construction; or

(ii) of Type C construction.

Part C3 Compartmentation and separation

Insert SA C3D16 as follows:

SA C3D16 Class 2 external walls exposed to brush fences

[2019: SA C2.15]

Where the distance between the *external wall* of a Class 2 building and a *brush fence* is less than 3 m, the Class 2 building must comply with the following:

(a) An *external wall* or part of an *external wall* exposed to the *brush fence* must be *fire-resisting* and extend to the underside of a *non-combustible* roof covering or a *non-combustible* eaves lining or to a point at which exposure to the *brush fence* no longer exists and must—

(i) have a FRL of at least 60/60/60 when tested from the outside; or

(ii) be of masonry veneer construction in which the external masonry veneer is not less than 90 mm thick; or

(iii) be of masonry construction not less than 90 mm thick; and

(iv) have any exposed openings protected in accordance with C4D5.

(b) Where an *external wall* is *required* by (a) to be *fire-resisting*, only that part of the wall, including openings within the specified distance, need to be constructed in that manner.

(c) The requirements of (a) do not apply to subfloor vents, roof vents, weepholes, control joints, construction joints and penetrations for pipes, conduits and the like.

(d) The following are permitted to encroach within 3 m of a *brush fence*—

(i) *non-combustible* fascias, gutters, downpipes; and

(ii) eaves with *non-combustible* roof cladding and *non-combustible* lining; and

(iii) flues, chimneys, pipes, domestic fuel tanks, cooling or heating appliances or other services; and

(iv) light fittings, electricity or gas meters, aerials or antennas; and

(v) pergolas, sun blinds or water tanks; and

(vi) unroofed terraces, landings, steps and ramps, not more than 1 m in height.

(e) The distance from any point on an *external wall* of a building to a *brush fence* is measured in any direction from the *external wall*.

Insert SA C3D17 as follows:

SA C3D17 Bulk grain storage facilities

[2019: SA C2.16]

Underground passageways in a *bulk grain storage facility* must be separated from other parts of the building by smoke-proof walls and smoke-proof doors complying with Specification 11.

Part C4 Protection of openings

Insert SA C4D18 as follows:

SA C4D18 Protection of openings – bulk grain storage facilities

[2019: SA C3.18]

Where external stairs, ramps or ladders are used as an *exit* in a *bulk grain storage facility*, any window or door opening within 6 m of the stairway or ladder—

(a) must be protected in accordance with C4D5; or

(b) the stairway, ramp or ladder must be enclosed for its full height above the lowest level of the window or door opening with *non-combustible* construction having an FRL of not less than 60/60/60.

Section D Access and egress

Part D2 Provision for escape

D2D3 Number of exits required

[2019: D1.2]

Delete D2D3(2) and insert SA D2D3(2) as follows:

(2) Class 2 to 8 buildings — In addition to any *horizontal exit*, not less than 2 *exits* must be provided from the following:

(a) Each *storey* if the building has an *effective height* of more than 25 m.

(b) A Class 2 or 3 building subject to C2D6.

(c) A *storage shed* in a *bulk grain storage facility* if the distance of travel to an exit is more than 150 m.

(d) The gallery level in a *cell type silo* in a *bulk grain storage facility*.

D2D4 When fire-isolated stairways and ramps are required

[2019: D1.3]

Delete D2D4(2) and insert SA D2D4(2) as follows:

(2) Class 5, 6, 7, 8 or 9 buildings — Every stairway or ramp serving as a *required exit* must be fire-isolated unless—

(a) in a Class 9a *health-care building* — it connects, or passes through or passes by not more than 2 consecutive *storeys* in areas other than *patient care areas*; or

(b) it is part of an *open spectator stand*; or

(c) in any other case except in a Class 9b *early childhood centre* or a Class 9c building, it connects, passes through or passes by not more than 2 consecutive *storeys* and one extra *storey* of any classification may be included if—

(i) the building has a sprinkler system (other than a FPAA101D system) complying with Specification 17 installed throughout; or

(ii) the *required exit* does not provide access to or egress for, and is separated from, the extra *storey* by construction having—

(A) an FRL of –/60/60, if non-*loadbearing*; and

(B) an FRL of 90/90/90 for Type A construction or 60/60/60 for Type B or C construction, if *loadbearing*; and

(C) no opening that could permit the passage of fire or smoke; or

(d) it is a *required exit* from a *bulk grain storage facility* and there are no window or door openings within 3 m of the stairway, ramp or ladder.

D2D5 Exit travel distances

[2019: D1.4]

Insert subclause SA D2D5(7) in clause D2D5 as follows:

(7) *Farm buildings* — Notwithstanding (3), in a *farm building*—

(a) no point on the floor must be more than 20 m from an *exit*, or a point from which travel in different directions to 2 *exits* is available, in which case the maximum distance to one of those *exits* must not exceed 60 m; and

(b) in a machinery room, plant-room or the like, the distance to a single *exit* serving a *storey* at the level of access to a road or open space may be increased to 30 m.

Insert subclause SA D2D5(8) in clause D2D5 as follows:

(8) *Bulk grain storage facilities* — Notwithstanding (3), in a *bulk grain storage facility* — where *required exits* are spaced not more than 100 m apart, the travel distance to an *exit* in a *cell type silo* or a *storage shed* is not limited.

Delete D2D6 and insert SA D2D6 as follows:

SA D2D6 Distance between alternative exits

[2019: SA D1.5(e)]

Exits that are *required* as alternative means of egress must be—

(a) distributed as uniformly as practicable within or around the *storey* served and in positions where unobstructed access to at least 2 *exits* is readily available from all points on the floor including lift lobby areas; and

(b) not less than 9 m apart; and

(c) not more than—

(i) in a Class 2 or 3 building — 45 m apart; or

(ii) in a Class 9a *health-care building*, if such *required exit* serves a *patient care area* — 45 m apart; or

(iii) in all other cases — 60 m apart; and

(d) located so that alternative paths of travel do not converge such that they become less than 6 m apart; and

(e) notwithstanding (c), *exits* that are *required* as alternative means of egress in a *farm building* must not be more than 80 m apart.

D2D14 Travel by non-fire-isolated stairways or ramps

[2019: D1.9]

Insert subclause SA D2D14(7) in clause D2D14 as follows:

(7) In a *bulk grain storage facility*, the distance from any point on the floor to a point of egress to a road or *open space* by way of a non-*fire-isolated stairway*, non-*fire-isolated ramp* or ladder is not limited.

D2D21 Plant rooms, lift machine rooms and electricity network substations: Concession

[2019: D1.16]

Insert subclause SA D2D21(3) in clause D2D21 as follows:

(3) In a *bulk grain storage facility*, a stair or ladder complying with AS 1657 may be used as an alternative means of egress from a *cell type silo*.

Part D3 Construction of exits

Delete D3D16 and insert SA D3D16 as follows:

SA D3D16 Thresholds

[2019: SA D2.15(e)]

(1) The threshold of a doorway must not incorporate a step or ramp at any point closer to the doorway than the width of the door leaf unless—

(a) in *patient care areas* in a Class 9a *health-care building*, the door sill is not more than 25 mm above the finished floor level to which the doorway opens; or

(b) in *resident use areas* a Class 9c building, a ramp is provided with a maximum gradient of 1:8 for a maximum height of 25 mm over the threshold; or

(c) in a building *required* to be *accessible* by Part D4, the doorway—

(i) opens to a road or *open space*; and

(ii) is provided with a threshold ramp or step ramp in accordance with AS 1428.1; or

(d) in other cases—

(i) the doorway opens to a road or *open space*, external stair landing or external balcony; and

(ii) the door sill is not more than 190 mm above the finished surface of the ground, balcony, or the like, to which the doorway opens.

(2) Notwithstanding the requirements of (1), where necessary due to the operational requirements of the building, a doorway serving a *farm building* may incorporate a step that is no more than 700 mm above the finished floor level.

Delete D3D23 and insert SA D3D23 as follows:

SA D3D23 Fixed platforms, walkways, stairways and ladders

[2019: SA D2.18(c)]

A fixed platform, walkway, stairway, ladder and any going and riser, landing, handrail or barrier attached thereto may comply with AS 1657 in lieu of D3D14, D3D15, D3D17, D3D18, D3D19, D3D20, D3D21 and D3D22 if it only serves—

(a) machinery rooms, boiler houses, lift-machine rooms, plant-rooms, and the like; or

(b) non-*habitable rooms*, such as attics, storerooms and the like that are not used on a frequent or daily basis in the internal parts of a *sole-occupancy unit* in a Class 2 building or Class 4 part of a building; or

(c) areas within a *farm building*.

D3D25 Swinging doors

[2019: D2.20]

Delete D3D25(1) and insert SA D3D25(1) as follows:

(1) A swinging door in a *required exit* or forming part of a *required exit*—

(a) must not encroach—

(i) at any part of its swing by more than 500 mm on the *required* width (including any landings) of a *required* stairway, ramp or passageway if it is likely to impede the path of travel of the people already using the *exit*; and

(ii) when fully open, by more than 100 mm on the *required* width of the *required exit*; and

(b) must swing in the direction of egress unless—

(i) it serves a building or part with a *floor area* not more than 200 m^2, it is the only *required exit* from the building or part and it is fitted with a device for holding it in the open position; or

(ii) it serves a *sanitary compartment* or airlock (in which case it may swing in either direction); or

(iii) it serves a *farm building*; and

(c) must not otherwise impede the path or direction of egress.

Part D4 Access for people with a disability

D4D2 General building access requirements

[2019: D3.1, Table D3.1]

Delete D4D2(4) and insert SA D4D2(4) as follows:

(4) For a Class 2 building, access requirements are as follows:

(a) Common areas:

(i) From a pedestrian entrance *required* to be *accessible* to at least 1 floor containing *sole-occupancy units* and to the entrance doorway of each *sole-occupancy unit* located on that level.

(ii) To and within not less than 1 of each type of room or space for use in common by the residents, including a cooking facility, sauna, gymnasium, *swimming pool*, common laundry, games room, individual shop, eating area, or the like.

(iii) Where a ramp complying with AS 1428.1 or a passenger lift is installed—

(A) to the entrance doorway of each *sole-occupancy unit*; and

(B) to and within rooms or spaces for use in common by the residents.

(iv) The requirements of (iii) only apply where the space referred to in (iii)(A) or (iii)(B) is located on the levels served by the lift or ramp.

(b) In developments consisting of 20 or more residential *sole-occupancy units* — to and within one residential *sole-occupancy unit* or 5% of the total number of residential *sole-occupancy units* provided, whichever is the greater, must be *accessible*.

Delete D4D5 and insert SA D4D5 as follows:

SA D4D5 Exemptions

[2019: SA D3.4(d)]

The following areas are not *required* to be *accessible*:

(a) An area where access would be inappropriate because of the particular purpose for which the area is used.

(b) An area that would pose a health or safety risk for people with a disability.

(c) Any path of travel providing access only to an area exempted by (a) or (b).

(d) In a *farm building* and a *bulk grain storage facility* it is not necessary to provide access for people with disabilities to any area if access would be inappropriate because of the particular purpose for which the area is used.

Section E Services and equipment

Part E1 Fire fighting equipment

E1D2 Fire hydrants

[2019: E1.3]

Insert subclause SA E1D2(5) in clause E1D2 as follows:

(5) In a *farm building*, in lieu of providing a fire hydrant system in accordance with (2), the building may be provided with—

(a) a fire hydrant system installed in accordance with AS 2419.1 with the following variations—

(i) in lieu of 4 hour water supply the minimum on-site water supply quantity must be as set out in Table SA E1D2 for the particular building group; and

(ii) for Group A and B buildings over 1000 m^2 in *floor area* each tank used must have a capacity of not less than 72,000 litres; and

(iii) for single tank systems compliance with clause 4.3.3 is not *required*; and

(iv) compliance with clause 4.3.1 of AS 2419.1 is not *required*; and

(v) for buildings incorporating non-*fire-resistant* polystyrene sandwich panel construction, the minimum water supply quantities in Table SA E1D2 must be increased by 50%; and

(vi) an on-site pumpset is not *required* if the design performance of section 2.3 of AS 2419.1 is achieved based on use of a fire truck pump with a capacity of 1,900 litres per minute at 1,000 kPa; and

(vii) in lieu of the coverage specified in AS 2419.1, external fire hydrants are located so that every part of the perimeter of a building is within 100 m from a hydrant outlet measured along the shortest distance of travel between or around buildings; or

(b) a water supply system comprising single or multiple on-site water storage tanks with connections for use by the *fire brigade* and complying with the requirements of AS 2419.1 for water supplies and water storage, except that—

(i) in lieu of 4 hour water supply the minimum on-site water supply quantity must be as set out in Table SA E1D2 for the particular building group;

(ii) for Group A and B buildings over 1000 m^2 in *floor area* each tank used must have a capacity of not less than 72,000 litres;

(iii) for single tank systems compliance with clause 4.3.3 of AS 2419.1 is not *required*;

(iv) for buildings incorporating non-*fire-resistant* polystyrene sandwich panel construction, the minimum water supply quantities in Table SA E1D2 must be increased by 50%;

(v) an on-site pumpset need not be provided;

(vi) for Group A or B buildings water storage tanks must be distributed so every part of the perimeter of a building is not more than 100 m from a tank suction point, measured along the shortest distance of travel between or around buildings;

(vii) for Group C buildings water storage tanks must be distributed so that every part of the perimeter of a building is within a 200 m radius of a tank suction point;

(viii) all pipes, valves and fittings for water storage tanks and connections must comply with section 5 and sections 8.2, 8.3, 8.6 and 8.7 of AS 2419.1 as relevant;

(ix) a hardstand area and vehicular approach from the site entrance, suitable for use by the *fire brigade* must be provided adjacent to each water storage tank.

Insert subclause SA E1D2(6) in clause E1D2 as follows:

(6) A dam may be regarded as a water storage tank if it complies with the requirements of section 5 of AS 2419.1 and the water level is maintained above the top of the highest *fire brigade* suction point at all times.

Insert subclause SA E1D2(7) in clause E1D2 as follows:

(7) The requirements of (1), (2), (3), (4) and SA E1D2(5) and (6) do not apply to a *farm shed*.

Insert subclause SA E1D2(8) in clause E1D2 as follows:

(8) In a *bulk grain storage facility*, on-site hydrants are not *required* where—

(a) street hydrants are available adjacent to the site which can supply water at not less than 5 litres per second; or

(b) a water supply system comprising single or multiple on-site water storage tanks with connections for use by the *fire brigade* and complying with the requirements of AS 2419.1 for water supplies and water storage, except that—

(i) in lieu of a 4 hour water supply, an on-site water storage tank containing not less than 25,000 litres is provided within 90 m of a dry booster connection Figure SA E1D2; and

(ii) one dry riser is provided for each *cell type silo* in a *bulk grain storage facility*, located in the middle of the longest side of the facility and within 4 m of a *required exit*; and

(iii) all areas to be protected are within 60 m of a riser outlet, measured around obstacles; and

(iv) metal or high pressure plastic pipe can used for the dry riser; and

(v) all pipes, valves and fittings for water storage tanks and connections must comply with section 5 and sections 8.2, 8.3, 8.6 and 8.7 of AS 2419.1 as relevant; and

(vi) a hardstand area and vehicular approach from the site entrance, suitable for use by the *fire brigade* must be provided adjacent each water storage tank.

Insert SA Table E1D2 as follows:

SA Table E1D2: Minimum quantities for on-site water supplies for farm buildings

Building Group	*Floor area* (m^2)	Minimum water supply quantity (L)
Group A	500 to 1,000	36,000
	1,001 to 2,000	72,000
	2,001 to 5,000	144,000
Group B	500 to 1,000	72,000
	1,001 to 2,000	144,000
Group C	5 L/m^2 or 36,000 L at each location, whichever is greater	

Table Notes

A single water supply with the minimum water quantity outlined in Table SA E1D2 can serve more than one building.

Insert SA Figure E1D2 as follows:

SA Figure E1D2: Location of hydrants, tanks, booster connections and dry risers

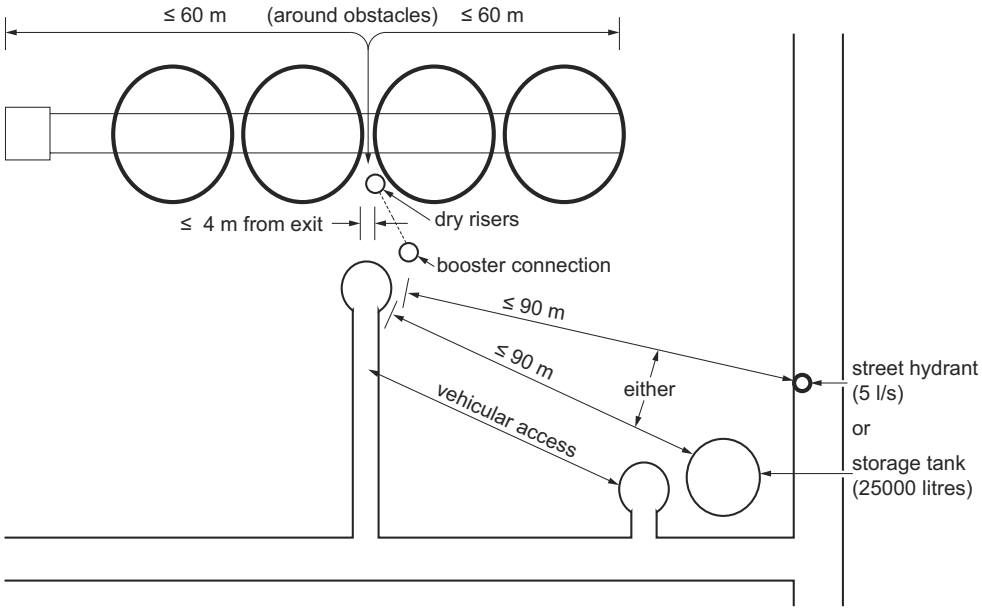

E1D3 Fire hose reels

[2019: E1.4]

Delete E1D3(1) and insert SA E1D3(1) as follows:

(1) E1D3 does not apply to—

(a) a Class 2, 3 or 5 building or Class 4 part of a building; or

(b) a Class 8 *electricity network substation*; or

(c) a Class 9c building; or

(d) classrooms and associated corridors in a primary or secondary *school*; or

(e) a *farm building* not used for hay storage exceeding 500 m^2 or 1,000 m^3; or

(f) a *bulk grain storage facility*.

E1D14 Portable fire extinguishers

[2019: E1.6 and Table E1.6]

Insert subclause SA E1D14(7) in clause E1D14 as follows:

(7) For Class A fire risks in a *farm building* the requirements of (1) need not be provided if—

(a) portable fire extinguishers for Class A fire risks are provided in accordance with SA E1D14(8); or

(b) notwithstanding the exemption provided by SA E1D3(1)(e), a fire hose reel system is provided in accordance with E1D3, or wash-down hoses or similar hoses that are—

(i) not more than 36 m long; and

(ii) equipped with a spray nozzle suitable for fighting a fire at the incipient stage; and

(iii) permanently connected to a water supply which is sufficient to supply two hoses discharging at the rate of 20 litres per minute for 60 minutes; and

(iv) arranged to provide coverage to all points on the floor within.

Insert subclause SA E1D14(8) in clause E1D14 as follows:

(8) Portable fire extinguishers provided to comply with SA E1D14(7)(a) must be—

(a) located at or adjacent to every *required exit*; or

(b) in open walled *farm buildings*, one extinguisher is provided for every 500 m^2 of *floor area*, or part thereof.

Part E2 Smoke hazard management

E2D1 Deemed-to-Satisfy Provisions

[2019: E2.0]

Delete E2D1(1) and insert SA E2D1(1) as follows:

(1) Where a *Deemed-to-Satisfy Solution* is proposed, *Performance Requirements* E2P1 and E2P2 are satisfied by complying with—

(a) E2D2 to SA E2D22; and

(b) in a building containing an *atrium*, Part G3; and

(c) in a building in an *alpine area*, Part G4; and

(d) for additional requirements for Class 9b buildings, Part I1.

Insert SA E2D22 as follows:

SA E2D22 Smoke venting in bulk grain storage facilities

[2019: SA E2.4]

In *bulk grain storage facility*—

(a) suitable natural smoke venting by fixed vents must be provided at the top of elevator towers and overhead galleries in a *cell type silo*; and

(b) smoke venting is not *required* in a *storage shed*.

Part E4 Visibility in an emergency, exit signs and warning systems

Delete E4D2 and insert SA E4D2 as follows:

SA E4D2 Emergency lighting requirements

[2019: SA E4.2(b)(iii), (j)]

An emergency lighting system must be installed—

(a) in every *fire-isolated stairway*, *fire-isolated passageway* or *fire-isolated ramp*; and

(b) in every *storey* of a Class 5, 6, 7, 8 or 9 building where the *storey* has a *floor area* more than 300 m^2—

(i) in every passageway, corridor, hallway, or the like, that is part of the path of travel to an *exit*; and

(ii) in any room having a *floor area* more than 100 m^2 that does not open to a corridor or space that has emergency lighting or to a road or *open space*; and

(iii) in any room having a *floor area* more than 300 m^2, except that—

(A) in a *farm building* any area primarily used for the storage of hay can be excluded when calculating the *floor area* of the *storey* or room of the building for the purpose of determining emergency lighting requirements; and

(B) emergency lighting is not *required* in a *farm building* where *automatic* back-up power is provided by a fuel driven back-up generator or where no artificial lighting is provided in the building; and

(C) an emergency lighting system is not *required* in a *farm shed*, Group C *farm building* or at ground floor level in *cell type silos* or *storage sheds*; and

(D) in a *bulk grain storage facility* the spacing of emergency lights can be increased to twice the distance required for Class 7 buildings; and

(c) in every passageway, corridor, hallway, or the like, having a length of more than 6 m from the entrance doorway of any *sole-occupancy unit* in a Class 2 or 3 building or Class 4 part of a building to the nearest doorway opening directly to—

(i) a *fire-isolated stairway*, *fire-isolated passageway* or *fire-isolated ramp*; or

(ii) an external stairway serving instead of a *fire-isolated stairway* under D2D13; or

(iii) an external balcony leading to a *fire-isolated stairway*, *fire-isolated passageway* or *fire-isolated ramp*; or

(iv) a road or *open space*; and

(d) in every *required* non-*fire-isolated stairway*; and

(e) in a *sole-occupancy unit* in a Class 5, 6 or 9 building if—

(i) the *floor area* of the unit is more than 300 m^2; and

(ii) an *exit* from the unit does not open to a road or *open space* or to an external stairway, passageway, balcony or ramp, leading directly to a road or *open space*; and

(f) in every room or space to which there is public access in every *storey* in a Class 6 or 9b building if—

(i) the *floor area* in that *storey* is more than 300 m^2; or

(ii) any point on the floor of that *storey* is more than 20 m from the nearest doorway leading directly to a stairway, ramp, passageway, road or *open space*; or

(iii) egress from that *storey* involves a vertical rise within the building of more than 1.5 m, or any vertical rise if the *storey* concerned does not admit sufficient light; or

(iv) the *storey* provides a path of travel from any other *storey required* by (i), (ii) or (iii) to have emergency lighting; and

(g) in a Class 9a *health-care building*—

(i) in every passageway, corridor, hallway, or the like, serving a *treatment area* or a *ward area*; and

(ii) in every room having a *floor area* of more than 120 m^2 in a *patient care area*; and

(h) in every Class 9c building excluding within *sole-occupancy units*; and

(i) in every *required* fire control centre; and

(j) in an underground passage in a *bulk grain storage facility*.

Delete E4D5 and insert SA E4D5 as follows:

SA E4D5 Exit signs

[2019: SA E4.5(e)]

An *exit* sign must be clearly visible to persons approaching the *exit*, and must be installed on, above or adjacent to each—

(a) door providing direct egress from a *storey* to—

(i) an enclosed stairway, passageway or ramp serving as a *required exit*; and

(ii) an external stairway, passageway or ramp serving as a *required exit*; and

(iii) an external access balcony leading to a *required exit*; and

(b) door from an enclosed stairway, passageway or ramp at every level of discharge to a road or *open space*; and

(c) *horizontal exit*; and

(d) door serving as, or forming part of, a *required exit* in a *storey required* to be provided with emergency lighting in accordance with E4D2; and

(e) *required exit* in a *farm building*.

Delete E4D8 and insert SA E4D8 as follows:

SA E4D8 Design and operation of exit signs

[2019: SA E4.8(c)]

(1) Every *required exit* sign must—

(a) comply with—

(i) AS/NZS 2293.1; or

(ii) for a photoluminescent *exit* sign, Specification 25; and

(b) be clearly visible at all times when the building is occupied by any person having the right of legal entry to the building.

(2) The requirements of (1) do not apply to—

(a) a *farm building* where—

(i) the use of illuminated *exit* signs could adversely affect the behaviour or welfare of animals being kept in the building; and

(ii) non-illuminated *exit* signs are provided that comply with clauses 5.5, 5.6 and 5.8 of AS/NZS 2293.1; or

(b) a *farm shed*.

Section F Health and amenity

Part F1 Surface water management, rising damp and external waterproofing

Delete F1P4 and insert SA F1P4 as follows:

SA F1P4 Rising damp

[2019: SA FP1.5]

(1) Moisture from the ground must be prevented from causing—

(a) undue dampness or deterioration of building elements; and

(b) unhealthy or dangerous conditions, or loss of amenity for occupants.

(2) Barriers installed to prevent transfer of moisture from the ground must have—

(a) high resistance to moisture penetration; and

(b) high resistance to damage during construction; and

(c) high resistance to degradation by dissolved salts.

F1D1 Deemed-to-Satisfy Provisions

[2019: F1.0]

Delete F1D1(1) and insert SA F1D1(1) as follows:

(1) Where a *Deemed-to-Satisfy Solution* is proposed, *Performance Requirements* F1P1 to F1P3 and SA F1P4 are satisfied by complying with F1D2 to F1D5, F1D6 (1) and (3), SA F1D6(2), SA F1D7 and F1D8.

F1D6 Damp-proofing

[2019: F1.9]

Delete F1D6(2) and insert SA F1D6(2) as follows:

(2) *Damp-proof courses* must exhibit long term resistance to degradation by dissolved salts in groundwater and consist of—

(a) embossed black polyethylene film meeting the requirements of clause 7.6 of AS/NZS 2904; or

(b) polyethylene coated aluminium meeting the requirements of clause 7.4 of AS/NZS 2904; or

(c) bitumen impregnated materials of not less than 2.5 mm thickness, meeting the requirements of clause 7.5 of AS/NZS 2904, when used in walls not higher than 7.8 m above the level of the *damp-proof course*.

Delete F1D7 and insert SA F1D7 as follows:

SA F1D7 Damp-proofing of floors on the ground

[2019: SA F1.10]

(1) If a floor of a room is laid on the ground or on fill, a damp-proofing membrane complying with Section 5.3.3 of AS 2870 must be installed.

(2) A damp-proofing membrane need not be provided if—

(a) weatherproofing is not *required*; or

(b) the floor is the base of a stair, lift or similar *shaft* which is adequately drained by gravitation or mechanical means.

Part F2 Wet areas and overflow protection

Delete F2P1 and insert SA F2P1 as follows:

SA F2P1 Wet area overflows

[2019: SA FP1.6]

Overflow from a bathroom, laundry facility or the like must be prevented from penetrating to adjoining rooms or spaces.

Insert SA F2P3 as follows:

SA F2P3 Prevention of surface water accumulation

[2019: SA FP1.8]

In laundries, bathrooms or rooms containing shower facilities the floors must be installed in a manner that will prevent accumulation of surface water which could create unhealthy or hazardous conditions.

F2D2 Wet area construction

[2019: F1.7(a) and (b)]

Delete F2D2(1) and insert SA F2D2(1) as follows:

(1) In a Class 2 and 3 building and a Class 4 part of a building, building elements in *wet areas* must—

(a) be *water resistant* or *waterproof* in accordance with Specification 26, except that—

(i) in any room containing a washing machine, the wall area from finished floor to a minimum of 75 mm above and 75 mm each side of the washing machine tap outlets must be *water resistant*; and

(ii) where a *vessel* is inset into a bench top in a kitchen, bar area, kitchenette or domestic food and beverage preparation area, the perimeter edges of the *vessel* must be *water resistant* for the extent of the *vessel*; and

(iii) penetrations in horizontal surfaces for tap and spout outlets in kitchens, bar areas, kitchenettes or domestic food and beverage preparation areas must be *waterproof*; and

(b) comply with AS 3740.

Delete F2D4 and insert SA F2D4 as follows:

SA F2D4 Provision of floor wastes

[2019: SA F1.11]

(1) A *wet area* provided with a *vessel* in accordance with F4D2, F4D4 and F4D5 must have the floor graded to a floor waste to permit drainage of water.

(2) With the exception of a bathroom or laundry located at any level above a *sole-occupancy unit* or public space in a Class 2 or 3 building or Class 4 part of a building, a floor need not be graded to a floor waste in accordance with (1) if—

(a) all *vessels* in the *wet area* are provided with in-built overflow protection or have permanent open trapped connection to the plumbing and drainage system (such as a WC pan); or

(b) the *vessel* is a clinical hand washing basin in a Class 9c building; or

(c) the floor waste is provided solely for the connection of plumbing fixtures and all *vessel* in the *wet area* are provided with in-built overflow protection or have permanent open trapped connection to the plumbing and drainage system (such as a WC pan).

(3) The fall of the floor surface to a floor waste *required* by (1) or (2) must be in accordance with F2D4(2).

Part F4 Sanitary and other facilities

F4D6 Accessible unisex sanitary compartments

[2019: Table F2.4a]

Delete F4D6(1) and insert SA F4D6(1) as follows:

(1) Where *required* by F4D5(a), the minimum number of *accessible* unisex *sanitary compartments* for each Class of building is as follows:

(a) For a Class 1b building—

(i) not less than 1; and

(ii) where private *accessible* unisex *sanitary compartments* are provided for every *accessible* bedroom, common *accessible* unisex *sanitary compartments* need not be provided.

(b) For a Class 2 building—

(i) where *sanitary compartments* are provided in common areas, not less than 1; and

(ii) in every *sole-occupancy unit required* by SA D4D2(4) to be *accessible*, not less than 1.

(c) For Class 3 and Class 9c buildings—

(i) in every *accessible sole-occupancy unit* provided with *sanitary compartments* within the *accessible sole-occupancy unit*, not less than 1; and

(ii) at each bank of *sanitary compartments* containing male and female *sanitary compartments* provided in common areas, not less than 1.

(d) For Class 5, 6, 7, 8 or 9 buildings except for within a *ward area* of a Class 9a *health-care building*, where F4D4 requires closet pans—

(i) 1 on every *storey* containing *sanitary compartments*; and

(ii) where a *storey* has more than 1 bank of *sanitary compartments* containing male and female *sanitary compartments*, at not less than 50% of those banks.

(e) For a Class 10a building appurtenant to another Class of building, at each bank of *sanitary compartments* containing male and female *sanitary compartments*, not less than 1.

F4D7 Accessible unisex showers

[2019: Table F2.4b]

Delete F4D7(1) and insert SA F4D7(1) as follows:

(1) Where *required* by F4D5(b), the minimum number of *accessible* unisex showers for each Class of building is as follows:

(a) For a Class 1b building—

(i) not less than 1; and

(ii) where private *accessible* unisex showers are provided for every *accessible* bedroom, common *accessible* unisex showers need not be provided.

(b) For a Class 2 building—

(i) where showers are provided in common areas, not less than 1; and

(ii) in every *sole-occupancy unit required* by SA D4D2(4) to be *accessible*, not less than 1.

(c) For Class 3 and 9c buildings—

(i) in every *accessible sole-occupancy unit* provided with showers within the *accessible sole-occupancy unit*, not less than 1; and

(ii) 1 for every 10 showers or part thereof provided in common areas.

(d) For Class 5, 6, 7, 8 or 9 buildings, where F4D4 requires 1 or more showers, not less than 1 for every 10 showers or part thereof.

(e) For a Class 10a building, where showers are provided, 1 for every 10 showers or part thereof.

Part F6 Light and ventilation

Delete F6D6 and insert SA F6D6 as follows:

SA F6D6 Ventilation of rooms

[2019: SA F4.5(b) and (c)]

A *habitable room*, office, shop, factory, workroom, *sanitary compartment*, bathroom, shower room, laundry and any other room occupied by a person for any purpose must have—

(a) natural ventilation complying with F6D7; or

(b) a mechanical ventilation or air-conditioning system complying with AS 1668.2 and AS/NZS 3666.1; or

(c) in a *storage shed* or *bulk grain storage facility*, a ventilation system that provides one air change every six hours using openings that have a total area of the lesser of—

(i) 35 m^2; or

(ii) one percent of the total *floor area*.

Section G Ancillary provisions

Part G1 Minor structures and components

Delete G1P2 and insert SA G1P2 as follows:

SA G1P2 Swimming pool access and water recirculation systems

[2019: SA GP1.2]

(1) A barrier must be provided to a *swimming pool* and must—

(a) be continuous for the full extent of the hazard; and

(b) be of a strength and rigidity to withstand the foreseeable impact of people; and

(c) restrict the access of young children to the pool and the immediate pool surrounds; and

(d) have any gates and doors fitted with latching devices not readily operated by young children, and constructed to automatically close and latch.

(2) A *swimming pool* water recirculation system must incorporate safety measures to avoid entrapment of, or injury to, a person.

(3) A *swimming pool* must have prominent and visible signage that assists persons to provide first aid and to perform cardiopulmonary resuscitation on young children.

Applications

SA G1P2 only applies to a *swimming pool* associated with a Class 2 or 3 building or Class 4 part of a building, with a depth of water more than 300 mm.

Delete G1D2 and insert SA G1D2 as follows:

SA G1D2 Swimming pools

[2019: SA G1.1]

(1) A *swimming pool* with a depth of water more than 300 mm and which is associated with a Class 2 or 3 building or Class 4 part of a building, must have suitable barriers to restrict access by young children to the immediate pool surrounds in accordance with AS 1926.1 and AS 1926.2.

(2) A water recirculation system in a *swimming pool* with a depth of water more than 300 mm must comply with AS 1926.3.

(3) For the purpose of clause 6.1.1 of AS 1926.3, a skimmer box is an outlet, and must have a means of releasing the vacuum pressure should the suction become blocked.

(4) A first aid and cardiopulmonary resuscitation sign must—

(a) be attached to the safety barrier of the *swimming pool*, or displayed near the *swimming pool*; and

(b) be at least 300 mm by 300 mm in size; and

(c) be made of durable and weatherproof material; and

(d) show information about the procedures for providing first aid, including performing cardiopulmonary resuscitation.

Part G5 Construction in bushfire prone areas

G5D1 Deemed-to-Satisfy Provisions

[2019: G5.0]

Delete G5D1(1) and insert SA G5D1(1) as follows:

(1) Where a *Deemed-to-Satisfy Solution* is proposed, *Performance Requirements* G5P1 and subject to G5D2, G5P2,

are satisfied by complying with G5D3 to SA G5D5.

Insert SA G5D5 as follows:

SA G5D5 Bushfire attack levels

[New for 2022]

Where a site is located in a *designated bushfire prone area*, the bushfire attack level that applies to the site is—

(a) for areas identified as general bushfire risk areas in the Planning and Design Code, the BAL-Low bushfire attack level; and

(b) for areas identified as medium bushfire risk areas in the Planning and Design Code, the BAL-12.5 bushfire attack level; and

(c) for areas identified as high bushfire risk areas in the Planning and Design Code, the bushfire attack level assessed for the site in accordance with the requirements of AS 3959; and

(d) for areas identified as urban interface in the Planning and Design Code that are within 500 m of a high bushfire risk area, the BAL-Low bushfire attack level; and

(e) for areas identified as urban interface in the Planning and Design Code that are within 100 m of a high bushfire risk area, the bushfire attack level assessed for the site in accordance with AS 3959.

SA Part G8 Access for maintenance

Introduction to this Part

This Part sets out additional requirements for access for maintenance.

Objectives

SA G8O1 Objective

[2019: SA GO7]

The Objectives of this Part are—

(a) to safeguard people from injury while cleaning *windows*; and

(b) to safeguard people from injury or illness resulting from the creation of hazardous spaces between buildings.

Functional Statements

SA G8F1 Window cleaning

[2019: SA GF7.1]

A building is to provide people with safe conditions for carrying out *window* cleaning operations.

SA G8F2 Hazardous conditions

[2019: SA GF7.2]

The space between buildings must not allow hazardous conditions to arise due to accumulation of rubbish that cannot readily be removed.

Performance Requirements

SA G8P1 Window cleaning

[2019: SA GP7.1]

Where any part of a *window* in a building is more than 5.5 m above ground level, provision must be made for safe access to the external surface of the *window* for minor maintenance and cleaning.

SA G8P2 Hazardous conditions

[2019: SA GP7.2]

The space between buildings must be sufficient to allow access for inspection and maintenance, to avoid hazardous conditions arising due to accumulation of rubbish that could—

(a) bridge termite barriers; or

(b) harbour vermin; or

(c) create a *fire hazard*.

Deemed-to-Satisfy Provisions

SA G8D1 Deemed-to-Satisfy Provisions

[2019: SA G7.0]

Performance Requirements SA G8P1 and SA G8P2 are satisfied by complying with SA G8D2 to SA G8D4.

SA G8D2 Application of Part

[2019: SA G7.1]

SA G8D3 and SA G8D4 apply to Class 2 to 9 buildings.

SA G8D3 Access for window cleaning

[2019: SA G7.2]

(1) Where any part of a *window* in a building is more than 5.5 m above ground level, access to the external surface of the *window* for minor maintenance and cleaning must be provided.

(2) Any of the following methods are acceptable—

(a) by means of a movable gantry; or

(b) by means of reversible pivoting sashes, each of which has catches that secure the mesh in either the normal or reversed position and give visual indication that the *window* is secure, provided that where a *window* sill is less than 900 mm above floor level, safety anchorages are provided; or

(c) by means of safety harness, having all anchorages—

(i) designed and installed in accordance with AS/NZS 1891.4; and

(ii) constructed of approved corrosion resistant material; or

(d) by means of opening sashes, in which the maximum reach to the farthest part of the *window* must not exceed 500 mm upwards or 1 m sideways or downwards and provided that where the *window* sill is less than 900 mm above floor level, safety anchorages are provided.

SA G8D4 Access for inspection and maintenance between buildings

[2019: SA G7.3]

Every part of an *external wall* of a building must be not less than 600 mm from—

(a) the *external wall* of any other building on the same allotment, unless the two buildings are abutting; or

(b) any boundary of the allotment, unless that wall is on or abutting the boundary,

unless the space between external columns is not infilled.

SA Part G9 Miscellaneous provisions

Introduction to this Part

This Part sets out miscellaneous addition requirements.

Performance Requirements

SA G9P1 Attachments to buildings

[2019: SA GP8.1]

An attachment to a building must incorporate features that will—

(a) protect it against corrosion; and

(b) collect and discharge water run-off safely; and

(c) prevent its projection affecting adjacent road safety conditions or pedestrian traffic; and

(d) provide resistance to the spread of fire if it overhangs a street boundary,

to the degree necessary to avoid creating hazardous conditions that may cause injury to people passing below or driving past.

Deemed-to-Satisfy Provisions

SA G9D1 Deemed-to-Satisfy Provisions

[2019: SA G8.0]

Performance Requirement SA G9P1 is satisfied by complying with SA G9D2 and SA G9D3.

SA G9D2 Application of Part

[2019: SA G8.1]

SA G9D3 applies to Class 2 to 9 buildings.

SA G9D3 Attachments to buildings

[2019: SA G8.2]

(1) An attachment to a building that is in the nature of a balcony or awning, bridge, gangway, hoarding or trade sign, sky sign, mast, flagpole, tower, aerial or antenna, lantern, cathead, crane, chimney, flue or duct, or an installation for cleaning and maintenance must—

(a) have all metal parts of corrosion resistant metal, or other metal suitably protected; and

(b) not overhang any street boundary at a height less than 2.5 m above the footpath, or 4 m above the roadway; and

(c) be provided with drainage to prevent rainwater or condensate falling onto or running across the footpath, unless either it is a retractable awning in the nature of a sun blind, or unless the total catchment area for run-off is less than 1.5 m^2.

(2) A balcony or awning that overhangs a street boundary—

(a) must not extend closer than 450 mm to the kerb of the roadway; and

(b) must be constructed of *non-combustible* or fire-retardant materials throughout, except that timber battens may be used to support the soffit lining.

Section I Special use buildings

SA Part I3 Farm buildings

Introduction to this Part

This Part references SA requirements for farm buildings.

Deemed-to-Satisfy Provisions

SA I3D1 Application of Part

[2019: SA H3.1]

The provisions of Part I3 do not apply in South Australia.

Notes

Additional requirements for *farm buildings* are contained in individual SA variation clauses that are applicable to *farm buildings*.

Schedule 1 Definitions

Agriculture: Cropping, grazing, animal husbandry, intensive animal keeping, horticulture, aquaculture, wool shearing or dairy, but not viticulture or forestry.

Assembly building

A building where people may assemble for—

(a) civic, theatrical, social, political or religious purposes including a library, theatre, public hall or place of worship; or

(b) educational purposes in a *school*, *early childhood centre*, preschool, or the like; or

(c) entertainment, recreational or sporting purposes including—

(i) a discotheque or nightclub; or

(ii) a cinema; or

(iii) a sports stadium, sporting or other club; or

(d) transit purposes including a bus station, railway station, airport or ferry terminal.

Brush fence: A fence or gate that is primarily constructed of Broombrush (Melalueca Uncinata).

Bulk grain storage facility: A building or structure used for the commercial bulk handling or storage of granular materials such as grain, ore, or the like, where only a small number of occupants are present at one time and includes *cell type silos* and *storage sheds*.

Cell type silo: A type of *bulk grain storage facility* similar to that illustrated in diagram (a) of Figure SA 1.

Insert SA Figure 1 as follows:

SA Figure 1: Two types of bulk grain storage facilities

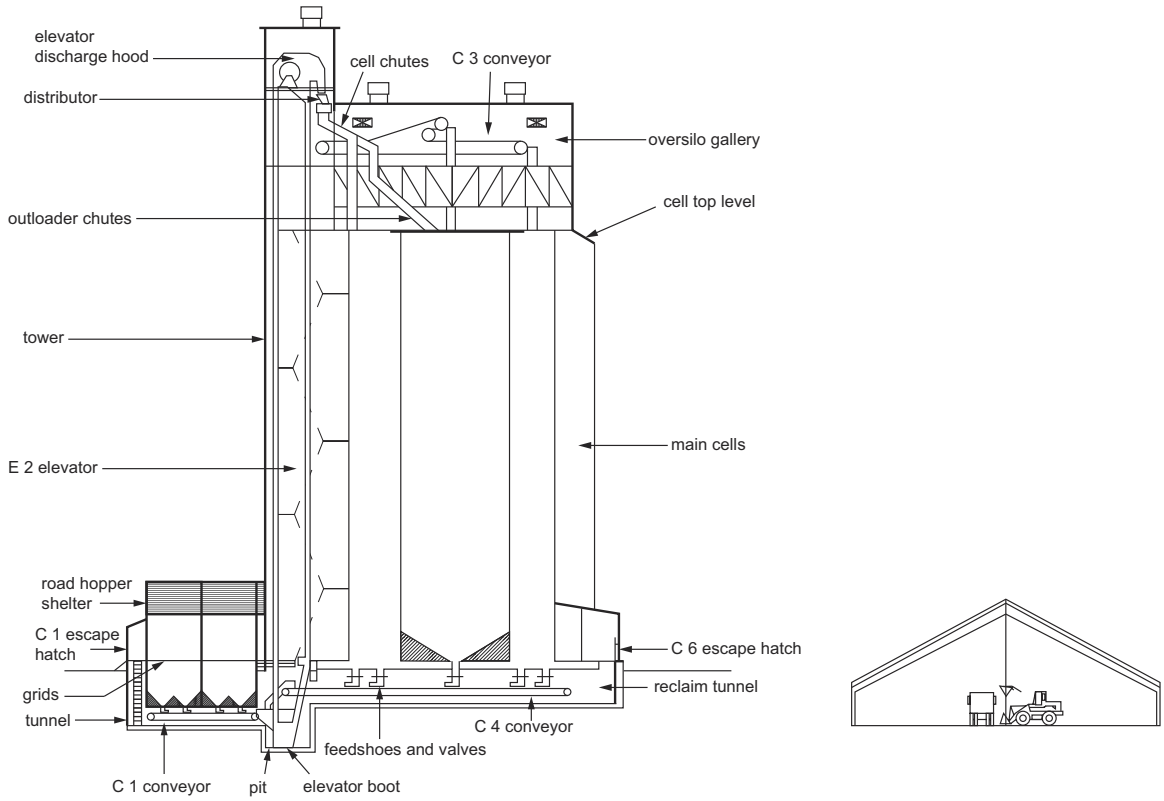

(a) *Cell type silo* (b) *Storage shed*

Farm building

A single *storey* Class 7 or 8 building that is—

(a) primarily associated with *agriculture* and located on land used primarily for *agriculture*; and

(b) the total number of people accommodated in the building does not exceed one person per 200 m^2 of total *floor area*, or six people, whichever is greater; and

(c) the *floor area* of each building does not exceed the maximum *floor area* and volume specified in Table SA 1 for the type of *farm building*; and

(d) the building does not contain occupancies of excessive fire hazard as listed in E1D5 to E1D13; and

(e) if the building is used for the storage of hay, an open space complying with C3D5(1) is provided around the perimeter of each building.

Insert SA Table SA 1 as follows:

SA Table SA 1: Farm building categories and maximum floor area

Building group	Type of farm building	Maximum floor area	Maximum volume
Group A	Buildings used for keeping, growing and/or harvesting of animals and/or plants, and includes greenhouses with rigid covering material and large implement/vehicle storage sheds.	5,000 m^2	30,000 m^3
Group B	Buildings used for packing, sorting and/or storage of produce and may include workshops.	2,000 m^2	12,000 m^3
Group C	Greenhouses with non-rigid, plastic or fabric covering material.	5,000 m^2	30,000 m^3

Rainwater tank: A vessel for the storage of *surface water* collected from the *roof catchment area* of the building.

Roof catchment area: The area of the roof (expressed in square metres), measured on the horizontal (no allowance for slope or vertical surfaces) and includes the plan area of the gutters.

Small arts venue: The whole or the only part of a building that has a rise in storeys of not more than 2—

(a) in which cultural activities including live music, visual arts displays, dancing, poetry and spoken word performances are provided to the public; and

(b) the floor area used as a *small arts venue* does not exceed 300 m^2; and

(c) no pyrotechnics or theatrical smoke (smoke machines, hazers or the like) are used.

Storage shed: A type of *bulk grain storage facility* similar to that illustrated in diagram (b) of Figure SA 1.

Schedule 2 Referenced documents

Insert SA Table 1 as follows:

SA Table 1: Schedule of referenced documents

No.	Date	Title	Volume One	Volume Two	Housing Provisions	Volume Three
AS/NZS 1260	2017	PVC-U pipes and fittings for drain, waste and vent applications Amdt 1	N/A	N/A	N/A	C1D3
AS 1428 Part 1	2001	Design for access and mobility – General requirements for access – New building work	N/A	SA H10D4	N/A	N/A
AS/NZS 1891 Part 4	2000	Industrial fall-arrest systems and devices: Selection, use and maintenance	SA G8D3	N/A	N/A	N/A
enHealth Council, Department of Health and Ageing	2004	Guidance on the use of rainwater tanks	N/A	SA H9D5	N/A	N/A
—	See Note 1	Planning and Design Code	SA G5D5	SA H7D4(3)	N/A	N/A

Table Notes

(1) The Planning and Design Code is the version current at the time of project documentation approval, unless noted otherwise.

SA Footnote: Other legislation affecting buildings

In addition to any applicable provisions of the Planning, Development and Infrastructure Act 2016 and, the Planning, Development and Infrastructure (General) Regulations 2017, the Planning, Development and Infrastructure (Swimming Pool Safety) Regulations 2019 and this Code, there are a number of other legislative technical requirements affecting the design, construction and/or performance of buildings that practitioners may need to be aware of, including, but not necessarily limited to, the following list. Additional legislative instruments such as regulations, codes and standards may exist under the legislation listed.

1. Abattoirs

Administering agency

Department for Health and Wellbeing

Relevant legislation

Food Act 2001

Food Regulations 2017

2. Accommodation

Administering agency

Department for Human Services

Relevant legislation

Supported Residential Facilities Act 1992

Supported Residential Facilities Regulations 2009

3. Asbestos Removal

Administering agency

SafeWork SA

Relevant legislation

Work, Health and Safety Act 2012

Work, Health and Safety Regulations 2012

4. Children's Services

Administering agency

Department for Education

Relevant legislation

Education and Children's Services Act 2019

Education and Children's Services Regulations 2020

5. Crown Land

Administering agency

Department for Environment and Water

Relevant legislation

Crown Land Management Act 2009

Crown Land Management Regulations 2010

6. Dangerous Goods

Administering agency

Department for Health and Wellbeing

Relevant legislation

Controlled Substances Act 1984

Controlled Substances (Pesticides) Regulations 2017

Controlled Substances (Poisons) Regulations 2011

Administering agency

SafeWork SA

Relevant legislation

Dangerous Substances Act 1979

Dangerous Substances (General) Regulations 2017

Explosives Act 1936

Explosives Regulations 2011

Explosives (Fireworks) Regulations 2016

Explosives (Security Sensitive Substances) Regulations 2021

7. Electrical Installations

Administering agency

Office of the Technical Regulator, Department for Energy and Mining

Relevant legislation

Electricity Act 1996

Electricity (General) Regulations 2012

Energy Products (Safety and Efficiency) Act 2000

Energy Products (Safety and Efficiency) Regulations 2012

8. Encroachments

Administering agency

Attorney-General's Department

Relevant legislation

Encroachments Act 1944

9. Fences

Administering agency

Attorney-General's Department

Relevant legislation

Fences Act 1975

Fences Regulations 2018

10. Fire Prevention in Existing Buildings

Administering agency

Department for Trade and Investment

Relevant legislation

Development Act 1993

Development Regulations 2008

Planning, Development and Infrastructure Act 2016

Planning, Development and Infrastructure (General) Regulations 2017

Administering agency

SA Fire and Emergency Services Commission

Relevant legislation

Fire and Emergency Services Act 2005

Fire and Emergency Services Regulations 2021

11. Food Premises

Administering agency

Department for Health and Wellbeing

Relevant legislation

Food Act 2001

Food Regulations 2017

12. Gas Installations

Administering agency

Office of the Technical Regulator, Department for Energy and Mining

Relevant legislation

Gas Act 1997

Gas Regulations 2012

Energy Products (Safety and Efficiency) Act 2000

Energy Products (Safety and Efficiency) Regulations 2012

13. Historic Buildings

Administering agency

Department of Environment and Water

Relevant legislation

Heritage Places Act 1993

Heritage Places Regulations 2020

14. Hospitals, Nursing Homes and Health Care Buildings

Administering agency

Department for Health and Wellbeing

Relevant legislation

Health Care Act 2008

Health Care Regulations 2008

15. Housing

Administering agency

Department of Human Services

Relevant legislation

Housing Improvement Act 2016

Housing Improvement Regulations 2017

16. Licensed Premises

Administering agency

Office of Liquor and Gambling Commissioner, Attorney-General's Department

Relevant legislation

Liquor Licensing Act 1997

Liquor Licensing (General) Regulations 2012

17. Lift Installations

Administering agency

SafeWork SA

Relevant legislation

Work, Health and Safety Act 2012

Work, Health and Safety Regulations 2012

18. Occupational Health and Safety

Administering agency

SafeWork SA

Relevant legislation

Work, Health and Safety Act 2012

Work, Health and Safety Regulations 2012

19. Pharmacies

Administering agency

Department for Health and Wellbeing

Relevant legislation

Health Practitioner Regulation National Law (South Australia) Act 2010

Health Practitioner Regulation National Law (South Australia) Regulations 2010

20. Radiation Safety

Administering agency

Environment Protection Authority

Relevant legislation

Radiation Protection and Control Act 1982

Radiation Protection and Control (Ionising Radiation) Regulations 2015

21. Sanitary Plumbing, Water Supply and Sewerage

Administering agency

Office of the Technical Regulator, Department for Energy and Mining

Relevant legislation

Water Industry Act 2012

Water Industry Regulations 2012

22. School (non-government)

Administering agency

Department for Education

Relevant legislation

Education and Children's Services Act 2019

Education and Children's Services Regulations 2020

23. Septic Tank and Grey Water Installations

Administering agency

Department for Health and Wellbeing

Relevant legislation

South Australian Public Health Act 2011

South Australian Public Health (Wastewater) Regulations 2013

South Australian Public Health (Legionella) Regulations 2013

24. Smoking Restrictions

Administering agency

Department for Health and Wellbeing

Relevant legislation

Tobacco and E-Cigarette Act 1997

Tobacco and E-Cigarette Regulations 2019

25. Subdivision of Property

Administering agency

Land Services SA, Attorney-General's Department and Department for Trade and Investment

Relevant legislation

Community Titles Act 1996

Community Titles Regulations 2011

Real Property Act 1886

Real Property Regulations 2009

Strata Titles Act 1988

Strata Titles Regulations 2018

26. Waste Management and Environment Protection

Administering agency

Environment Protection Authority

Relevant legislation

Environment Protection Act 1993

Environment Protection Regulations 2009

Schedule 9 Tasmania

Introduction

Section A **Governing requirements**

Part A1	Interpreting the NCC
A1G4	Interpretation
Part A4	Referenced documents
A4G1	Referenced documents
Part A5	Documentation of design and construction
A5G4	Evidence of suitability — Volume Three (PCA)

Section D **Access and egress**

Part D1	Access and egress
TAS D1P10	Standards made under the Disability Discrimination Act
Part D4	Access for people with a disability
D4D1	Deemed-to-Satisfy Provisions
TAS D4D5	Exemptions
TAS D4D14	Compliance with Premises Standards

Section E **Services and equipment**

Part E1	Fire fighting equipment
TAS E1P7	Automatic fire detection system
TAS E1D1	Deemed-to-Satisfy Provisions
TAS E1D17	Fire detection and alarm system

Section F **Health and amenity**

Part F4	Sanitary and other facilities
TAS F4D13	Non-flushed urinals
TAS F4D14	Installation of closet fixtures
Part F8	Condensation management
TAS F8P1	Condensation and water vapour management

Section G **Ancillary provisions**

Part G1	Minor structures and components
TAS G1P2	Swimming pool access and water recirculation systems
TAS G1P6	Swimming pools
G1D1	Deemed-to-Satisfy Provisions
TAS G1D2	Swimming pools
Part G5	Construction in bushfire prone areas
TAS G5P1	Bushfire resistance
TAS G5P2	Additional bushfire requirements for certain Class 9 buildings

Section I **Special use buildings**

TAS Part I4 **Food premises**

Objectives

TAS I4O1	Objective

Functional Statements

TAS I4F1	Food premises

Performance Requirements

TAS I4P1	Application of Part
TAS I4P2	Design and construction
TAS I4P3	Water supply
TAS I4P4	Sewage and waste water disposal
TAS I4P5	Storage of garbage and recyclables
TAS I4P6	Ventilation
TAS I4P7	Lighting
TAS I4P8	Floors
TAS I4P9	Walls and ceilings
TAS I4P10	Hand washing facilities
TAS I4P11	Fixtures, fittings and equipment
TAS I4P12	Storage facilities
TAS I4P13	Refrigerated and cooling chambers

Deemed-to-Satisfy Provisions

TAS I4D1	Application of Part
TAS I4D2	Deemed-to-Satisfy Provisions
TAS I4D3	General requirements
TAS I4D4	Pests and contaminants
TAS I4D5	Drains and pipes
TAS I4D6	Offensive material and trade waste
TAS I4D7	Ventilation
TAS I4D8	Lighting
TAS I4D9	Floors, walls and ceilings
TAS I4D10	Separation of work place
TAS I4D11	Washbasins
TAS I4D12	Sinks
TAS I4D13	Design, construction and installation of fixtures, fittings and equipment
TAS I4D14	Storage of materials and equipment
TAS I4D15	Food store
TAS I4D16	Meat premises
TAS I4D17	Dairy produce
TAS I4D18	Refrigerated and cooling chambers

TAS Part I5 Dining rooms and bar rooms

Deemed-to-Satisfy Provisions

TAS I5D1	Application of Part
TAS I5D2	Sanitary facilities
TAS I5D3	Separation from other areas

TAS Part I6 Meat premises

Deemed-to-Satisfy Provisions

TAS I6D1	Application of Part
TAS I6D2	Premises processing animals and meat

TAS Part I7 Farm dairy premises

Deemed-to-Satisfy Provisions

	TAS I7D1	Application of Part
	TAS I7D2	Milking sheds and holding yards
	TAS I7D3	Milk receiving area and milk storage room
	TAS I7D4	Water supply
TAS Part I8	**Pharmacies**	
	Deemed-to-Satisfy Provisions	
	TAS I8D1	Application of Part
	TAS I8D2	Definition
	TAS I8D3	Pharmacy premises
	TAS I8D4	Dispensary
	TAS I8D5	Security of dispensary
TAS Part I9	**Health service establishments**	
	Deemed-to-Satisfy Provisions	
	TAS I9D1	Application of Part
	TAS I9D2	Design and construction of health service establishments
TAS Part I10	**Mortuaries**	
	Deemed-to-Satisfy Provisions	
	TAS I10D1	Application of Part
	TAS I10D2	Layout of mortuary
	TAS I10D3	Construction of body preparation room
	TAS I10D4	Water supply and sewerage
TAS Part I11	**Foundries**	
	Deemed-to-Satisfy Provisions	
	TAS I11D1	Application of Part
	TAS I11D2	General
	TAS I11D3	Cupola charging platform
	TAS I11D4	Deep moulds and pits
	TAS I11D5	Pot furnaces
TAS Part I12	**Premises for manufacture or processing of glass reinforced plastics**	
	Deemed-to-Satisfy Provisions	
	TAS I12D1	Application of Part
	TAS I12D2	Separation from other buildings
	TAS I12D3	Rise in storeys
	TAS I12D4	Maximum floor areas
	TAS I12D5	Required exits
	TAS I11D6	Hand laminating and spray depositing
	TAS I12D7	Ventilation
	TAS I12D8	Smoke and heat roof vents
TAS Part I13	**Premises for production of processing of isocyanates**	
	Deemed-to-Satisfy Provisions	
	TAS I13D1	Application of Part
	TAS I13D2	Areas of work places
	TAS I13D3	Separation from other areas and buildings
	TAS I13D4	Rise in storeys
	TAS I13D5	Maximum floor areas

	TAS I13D6	Required exits
	TAS I13D7	Bulk stores for polyols and isocyanates
	TAS I13D8	Curing room
TAS Part I14	**Premises for electro-plating, electro-polishing, anodising or etching**	
	Deemed-to-Satisfy Provisions	
	TAS I14D1	Application of Part
	TAS I14D2	Floors
	TAS I14D3	Height of plating area
	TAS I14D4	Air space
	TAS I14D5	Ceiling construction
TAS Part I15	**Premises for lead processing**	
	Deemed-to-Satisfy Provisions	
	TAS I15D1	Application of Part
	TAS I15D2	Floors
	TAS I15D3	Height of lead processing areas
	TAS I15D4	Air space and floor space
	TAS I15D5	Interior of lead processing areas
	TAS I15D6	Dust collection
	TAS I15D7	Isolation of certain processes
	TAS I15D8	Drying room shelves
	TAS I15D9	Washing facilities
	TAS I15D10	Change rooms
TAS Part I16	**Early childhood centres and school age care facilities**	
	Objectives	
	TAS I16O1	Objective
	Functional Statements	
	TAS I16F1	Early childhood centres and school age care facilities
	Performance Requirements	
	TAS I16P1	Design and construction
	TAS I16P2	Health and amenity
	TAS I16P3	Perimeter fencing and barriers
	Deemed-to-Satisfy Provisions	
	TAS I16D1	Application of Part
	TAS I16D2	Deemed-to-Satisfy Provisions
TAS Part I18	**Temporary structures**	
	Performance Requirements	
	TAS I18P1	Application of Part
	TAS I18P2	Safety and serviceability
	TAS I18P3	Resistance to the spread of fire
	TAS I18P4	Access
	TAS I18P5	Exits
	TAS I18P6	Fall prevention
	TAS I18P7	Lighting
	TAS I18P8	Identification of exits
	TAS I18P9	Fire-fighting equipment

	TAS I18P10	Sanitary facilities
	TAS I18P11	Artificial lighting
	TAS I18P12	Ventilation
	TAS I18P13	Electrical services
	TAS I18P14	Heating appliances
	TAS I18P15	Tiered seating
	TAS I18P16	Safe environment
	Deemed-to-Satisfy Provisions	
	TAS I18D1	Application of Part
	TAS I18D2	Deemed-to-Satisfy Provisions
	TAS I18D3	Access
	TAS I18D4	Lighting
	TAS I18D5	Ventilation
	TAS I18D6	Electrical
	TAS I18D7	Heating appliances
TAS Part I17	**Premises where work is undertaken on gas-fuelled vehicles**	
	Deemed-to-Satisfy Provisions	
	TAS I17D1	Application of Part
	TAS I17D2	Working areas
Section J	**Energy efficiency**	
	TAS Part J3	Elemental provisions for a sole-occupancy unit of a Class 2 building or a Class 4 part of a building
Schedule 1	**Definitions**	
Schedule 2	**Referenced documents**	
Footnote: Other legislation affecting buildings		

TAS Introduction

This Appendix contains variations and additions to the Building Code of Australia (BCA) provisions which are considered necessary for the effective application of the BCA in Tasmania and shall be treated as amendments to the Code.

Section A Governing requirements

Part A1 Interpreting the NCC

A1G4 Interpretation

[2019: A1.0]

Insert subclause TAS A1G4(7) in clause A1G4 as follows:

(7) The Director of Building Control may issue written advice to deal with arising issues such as interpretation of codes, standards and regulations.

Part A4 Referenced documents

A4G1 Referenced documents

[2019: A4.0]

Delete A4G1(3) and insert TAS A4G1(3) as follows:

(3) The following applies:

(a) All Tasmanian legislative documents referenced within the PCA are taken to be the latest published versions thereof unless noted otherwise.

Part A5 Documentation of design and construction

A5G4 Evidence of suitability — Volume Three (PCA)

[2019: A5.3]

Insert subclause TAS A5G4(7) in clause A5G4 as follows:

(7) A *product* used in roof plumbing, heating ventilation and air-conditioning or on-site liquid trade waste are deemed fit to be for their intended purpose if it has evidence of suitability in the form of—

(a) *WaterMark Licence* issued in accordance with the *WaterMark Certification Scheme*; or

(b) a current certificate issued by a certification body stating that the properties and performance of a product meet the requirements of the NCC Volume Three; or

(c) authorisation from the Director of Building Control.

Insert subclause TAS A5G4(8) in clause A5G4 as follows:

(8) A *product* used in *On-site wastewater management systems* are deemed to be fit for their intended purpose if it has evidence of suitability in the form of—

(a) an *On-site wastewater management system* used in a *plumbing* installation must be issued with a Certificate of Accreditation in accordance with the AS 1546 series of Standards; or

(b) a current certificate issued by a JAS-ANZ accredited certification body stating that the properties and performance of a product meets the requirement of NCC Volume Three; and

(c) accreditation from the Director of Building Control.

Insert subclause TAS A5G4(9) in clause A5G4 as follows:

(9) A holding tank or collection well for use in a *plumbing* or *drainage* installation may be verified as meeting the *Performance Requirements* of the Director of Building Control if complies with AS/NZS 1546.1.

Insert subclause TAS A5G4(10) in clause A5G4 as follows:

(10) Under the Tasmanian Building Act, the Director of Building Control may accredit an *On-site wastewater management system*. On-site wastewater management systems larger than that covered by the Australian Standards AS/NZS 1546 Series are exempt from accreditation and a Performance Solution is required.

Products accredited by the Director of Building Control are published in a list available at www.cbos.tas.gov.au.

Section D Access and egress

Part D1 Access and egress

Insert TAS D1P10 as follows:

TAS D1P10 Standards made under the Disability Discrimination Act

[2019: Tas DP10]

A building or part of a building must be *accessible* in accordance with the requirements of a Standard made under the Disability Discrimination Act 1992 (Cth).

Part D4 Access for people with a disability

D4D1 Deemed-to-Satisfy Provisions

[2019: D3.0]

Delete D4D1(1) and insert TAS D4D1(1) as follows:

(1) Where a *Deemed-to-Satisfy Solution* is proposed, *Performance Requirements* D1P1 to D1P6, D1P8, D1P9 and TAS D1P10 are satisfied by complying with—

(a) D2D2 to D2D23, D3D2 to D3D30, D4D2 to D4D13 and TAS D4D14; and

(b) in a building containing an *atrium*, Part G3; and

(c) additional requirements for Class 9b buildings, Part I1; and

(d) for public transport buildings, Part I2.

Delete D4D1(3) and insert TAS D4D1(3) as follows:

(3) This sub-clause has deliberately been left blank.

Delete D4D5 and insert TAS D4D5 as follows:

TAS D4D5 Exemptions

[2019: TAS D3.4(d)]

The following areas are not *required* to be *accessible*:

(a) An area where access would be inappropriate because of the particular purpose for which the area is used.

(b) An area that would pose a health or safety risk for people with a disability.

(c) Any path of travel providing access only to an area exempted by (a) or (b).

(d) The Class 2 parts of a building where—

(i) the building is an existing building with a *rise in storeys* of two; and

(ii) the *storey* at ground level is Class 5 or 6; and

(iii) the upper *storeys* is comprised of two or more Class 2 *sole-occupancy units* that are not made available for short-term rental.

Insert TAS D4D14 as follows:

TAS D4D14 Compliance with Premises Standards

[2019: TAS D3.13]

(1) A building solution must comply with the Disability (Access to Premises - Buildings) Standards 2010.

(2) A building solution complies with TAS D4D1(1)(a) if it complies with the applications, exemptions and concessions in the Disability (Access to Premises - Buildings) Standards 2010.

Section E Services and equipment

Part E1 Fire fighting equipment

Insert TAS E1P7 as follows:

TAS E1P7 Automatic fire detection system

[2019: TAS EP1.7]

An *automatic* fire detection system must be installed to the degree necessary to alert the *fire brigade* of fire so that fire fighting operations may be undertaken at the earliest possible time to limit property and environmental damage appropriate to—

(a) the building functions and use; and

(b) the *fire hazard*; and

(c) the height of the building; and

(d) the building *floor area*.

Applications

Tas E1P7 only applies to—

(a) a Class 5 building or Class 6 building having an aggregate *floor area* of more than 1000 m^2; and

(b) a Class 7 building having a *floor area* of more than 1000 m^2 in which furniture is stored; and

(c) a Class 8 building which is a special *fire hazard* building and in which more than 25 persons are employed; and

(d) a Class 9b building which is a school or *early childhood centre* or a creche which—

(i) is of more than 1 *storey*; or

(ii) has a storey with a *floor area* more than 500 m^2; and

(e) a Class 9b building which is a theatre.

Delete E1D1 and insert TAS E1D1 as follows:

TAS E1D1 Deemed-to-Satisfy Provisions

[2019: TAS E1.0]

Performance Requirements E1P1 to E1P6 and TAS E1P7 are satisfied by complying with E1D2 to E1D16, TAS E1D17, and for *farm buildings* and *farm sheds*, Part I3.

Insert TAS E1D17 as follows:

TAS E1D17 Fire detection and alarm system

[2019: TAS E1.101]

An *automatic* fire detection and alarm system must comply with S20C4 and S20C8.

Section F Health and amenity

Part F4 Sanitary and other facilities

Insert TAS F4D13 as follows:

TAS F4D13 Non-flushed urinals

[2019: TAS F2.101]

Non-flushed urinals not connected to a sewerage system must comply with TAS F4D14.

Insert TAS F4D14 as follows:

TAS F4D14 Installation of closet fixtures

[2019: TAS F2.102]

(1) If a sufficient sewerage system is not available, an authorised alternative means of disposal of sewage may be installed.

(2) If sanitary facilities are not water-flushed, the following provisions apply:

(a) A pit latrine, an incinerating toilet, a chemical toilet, a removable pan or a non-flushing urinal must not be within 2 m of a building containing habitable rooms.

(b) The floor on which a removable pan is placed must be impervious.

(c) A room containing a composting toilet must be separated from habitable rooms by way of a permanently ventilated air lock (which may be a circulation space).

(d) The minimum ventilation *required* under (c) shall be the greater of—

(i) 8000 mm^2; or

(ii) 1/500th of the *floor area* of the circulation space.

(e) Access for maintenance or removal of waste from a composting toilet must be by way of an access door which opens directly to the outside of the building.

Part F8 Condensation management

Delete F8P1 and insert TAS F8P1 as follows:

TAS F8P1 Condensation and water vapour management

[2019: TAS FP6.1]

In a *sole-occupancy unit* of a Class 2 building or a Class 4 part of a building, risks associated with water vapour and *condensation* must be managed to minimise their impact on the health of occupants.

Notes

(1) Refer to the guidance in the "Condensation in Buildings Tasmanian Designers' Guide" – current version available at www.cbos.tas.gov.au. This Guide must be read in conjunction with the NCC.

(2) The strategies listed in the Guide exceed the NCC requirements for condensation management, however are strongly recommended to assist in minimising condensation in cool climates like Tasmania.

Section G Ancillary provisions

Part G1 Minor structures and components

Delete G1P2 and insert TAS G1P2 as follows:

TAS G1P2 Swimming pool access and water recirculation systems

[2019: TAS GP1.2]

(1) A barrier must be provided to a *swimming pool* and must—

(a) be continuous for the full extent of the hazard; and

(b) be of a strength and rigidity to withstand the foreseeable impact of people; and

(c) restrict the access of young children to the pool and the immediate pool surrounds; and

(d) have any gates and doors fitted with latching devices not readily operated by young children, and constructed to automatically close and latch.

(2) A *swimming pool* water recirculation system must incorporate safety measures to avoid entrapment of, or injury to, a person.

Applications

(1) TAS G1P2(1) only applies to a *swimming pool* associated with a Class 2 or 3 building or Class 4 part of a building, with a depth of water of more than 300 mm.

(2) TAS G1P2(2) only applies to a *swimming pool* with a depth of water more than 300 mm.

Insert TAS G1P6 as follows:

TAS G1P6 Swimming pools

[2019: TAS GP1.6]

Swimming pools must be suitable and safe to use and be provided with appropriate facilities.

Limitations

TAS G1P6 does not apply to a *swimming pool* associated with a Class 2 building.

G1D1 Deemed-to-Satisfy Provisions

[2019: G1.0]

Delete G1D1(2) and insert TAS G1D1(2) as follows:

(2) Where a *Deemed-to-Satisfy Solution* is proposed, *Performance Requirements* G1P2 to G1P5 and TAS G1P6 are satisfied by complying with TAS G1D2 to G1D4.

Delete G1D2 and insert TAS G1D2 as follows:

TAS G1D2 Swimming pools

[2019: TAS G1.1]

(1) A *swimming pool* with a depth of water more than 300 mm and which is associated with a Class 2 or 3 building or Class 4 part of a building, must have suitable barriers to restrict access by young children to the immediate pool surrounds in accordance with AS 1926.1 and AS 1926.2.

(2) A water recirculation system in a *swimming pool* with a depth of water more than 300 mm must comply with AS 1926.3.

(3) *Swimming pools* for the use of the public, a club, or an association, or in connection with Class 3, 5, 6, 7, 8 or 9

buildings must—

(a) be constructed of durable materials with smooth finishes; and

(b) have sides vertical; and

(c) in that part of the pool where the water depth is not more than 1.5 m, have the bottom or floor slope not steeper than 1 vertical to 15 horizontal; and

(d) have the depth of water marked clearly and conspicuously on each side of the pool (at the shallow end and at the deep end); and

(e) not have diving boards installed where the water depth is less than 3.5 m; and

(f) have scum-gutters with opening not less than 150 mm if they are to provide hand-holds; and

(g) have the floor or bottom of the pool, except for the guide lines, of such colours that the light reflectance is not less than 60%.

(4) For a public *swimming pool* or pool in which competitions are held—

(a) all steps into the pool must be recessed; and

(b) fittings must not project into the water area; and

(c) piping must not be bracketed to the sides to provide hand-holds; and

(d) surrounding concourses must be provided not less than 2 m wide, with a suitable non-slip surface, graded away from the pool and drained to waste; and

(e) dressing rooms with sanitary accommodation must be so located that bathers pass through that accommodation enroute to the *swimming pool*.

(5) If the volume of a *swimming pool* exceeds 15 m^3—

(a) an adequate water recirculation, disinfection and filtration system must be installed; and

(b) (the inlet and outlet openings in a *swimming pool* for the purpose of water recirculation must be so located that water movement is continuous from inlet to outlet; and

(c) recirculation of water in a *swimming pool* must be so designed that the pool contents are recirculated not less than once in the period shown in TAS Table G1D2a; and

(d) water filtration rates must not exceed 12 250 L/m^2 of sand filter bed per hour, or an equivalent rate in other filter media.

(6) Where no other suitable sanitary accommodation is provided, sanitary facilities must be provided in accordance with TAS Table G1D2b.

(7) Where no other suitable shower facilities are provided, showers must be provided so that each shower serves up to 40 persons.

Insert TAS Table G1D2a as follows:

TAS Table G1D2a: Recirculation of water in swimming pools

Pool type	Period (hours)
Outdoor *swimming pool*	6
Indoor *swimming pool*	4
Wading pool	2

Insert TAS Table G1D2b as follows:

TAS Table G1D2b: Sanitary facilities at swimming pools

Gender	Maximum number served by 1 closet fixture	Maximum number served by each extra closet fixture	Maximum number served by 1 urinal	Maximum number served by each extra urinal	Maximum number served by 1 wash basin	Maximum number served by each extra wash basin
Males	60	60	60	60	60	60
Females	40	40	N/A	N/A	60	60

Part G5 Construction in bushfire prone areas

Delete G5P1 and insert TAS G5P1 as follows:

TAS G5P1 Bushfire resistance

[2019: GP5.1]

A building that is constructed in a *designated bushfire prone area* must be designed and constructed to—

(a) reduce the risk of ignition from a *design bushfire* with an annual exceedance probability not more than 1:100 years, or 1:200 years for a Class 9 building; and

(b) take account of the assessed duration and intensity of the *fire actions* of the *design bushfire*; and

(c) be designed to prevent internal ignition of the building and its contents; and

(d) maintain the structural integrity of the building for the duration of the *design bushfire*.

Applications

G5P1 applies in a *designated bushfire prone area* to—

(a) a Class 2 or 3 building; and

(b) a Class 9a *health-care building*; and

(c) a Class 9b—

(i) *early childhood centre*; and

(ii) primary or secondary *school*; and

(d) a Class 9c *residential care building*; and

(e) a Class 10a building or deck immediately adjacent or connected to a building of a type listed in (a) to (d).

Notes

For additional requirements relating to bushfire prone areas, refer to the Director's Determinations on Bushfire Hazard Areas – current versions available at www.cbos.tas.gov.au

Delete G5P2 and insert TAS G5P2 as follows:

TAS G5P2 Additional bushfire requirements for certain Class 9 buildings

[New for 2022]

A building that is constructed in a *designated bushfire prone area* and occupied by people who may be unable to readily evacuate the building prior to a bushfire must, to the degree necessary—

(a) reduce the risk of an untenable indoor environment for occupants during a bushfire event, appropriate to the—

(i) location of the building relative to fire hazards, including—

(A) classified vegetation; and

(B) adjacent buildings, structures and movable objects; and

(C) carparking areas and allotment boundaries; and

(D) other *combustible* materials; and

(ii) number of occupants to be accommodated within the building; and

(iii) intensity of bushfire attack on the building; and

(iv) duration of occupancy; and

(v) intensity of potential consequential fires; and

(vi) occupant tenability within the building before, during and after the bushfire event; and

(vii) combined effects of structural, fire exposure and other effects to which the building may reasonably be subjected; and

(viii) provision of fire fighting equipment and water supply to facilitate protection of the building; and

(b) be provided with vehicular access to the *site* to enable firefighting and emergency personnel to defend or evacuate the building; and

(c) have access to a sufficient supply of water for firefighting purposes on the *site*; and

(d) provide safe access within the *site* to the building (including carparking areas), as well as safe egress after the bushfire event.

Applications

TAS G5P2 applies to the following buildings located in a *designated bushfire prone area*—

(a) a Class 9a *health-care building*; and

(b) a Class 9b—

(i) *early childhood centre*; and

(ii) primary or secondary *school*; and

(c) a Class 9c *residential care building*.

Notes

(1) TAS G5P2 does not guarantee the safety of building occupants or the maintenance of tenable conditions within a building during a bushfire event.

(2) For additional requirements relating to bushfire prone areas, refer to the Director's Determinations on Bushfire Hazard Areas – current versions available at www.cbos.tas.gov.au

Section I Special use buildings

TAS Part I4 Food premises

Introduction to this Part

This Part contains additional requirements for food premises.

Objectives

TAS I4O1 Objective

[2019: TAS H102 O1]

The objective of this Part is to facilitate the safe manufacture, preparation, storage and packing of food for sale for human consumption.

Functional Statements

TAS I4F1 Food premises

[2019: TAS H102 F1]

Each building or part of a building constructed as a food premise must be able to be used in such a manner that minimises opportunities for food contamination.

Performance Requirements

TAS I4P1 Application of Part

[2019: TAS H102 (Application)]

(1) TAS I4P2 to TAS I4P13 applies to any premises where food intended for human consumption is manufactured, processed, prepared, packed, stored or sold and to which the following apply—

(a) Food Act 2003; or

(b) Liquor Licensing Act 1990; or

(c) Primary Produce Safety Act 2011; or

(d) Dairy Industry Act 1994.

(2) TAS I4P2 to TAS I4P13 includes, but is not limited to—

(a) bakehouses; and

(b) bar service areas; and

(c) premises for boning, curing, canning, pre-packing or other similar processes of preparation of meat for sale; and

(d) retail meat premises; and

(e) eating houses and tea shops; and

(f) fish shops; and

(g) kitchens in eating houses, restaurants, guest houses, motels and hotels; and

(h) rooms for processing, manufacturing, packing, etc. of fruit and vegetables, dairy products, ice blocks, ices, meat-for-sale, or other fish; and

(i) primary produce business premises regulated by or under a Food Safety Scheme made under the Primary Produce Safety Act; and

(j) take-away-food stores; and

(k) breweries and wineries.

(3) In TAS I4P2 to TAS I4P13, words and meanings as defined in the Food Act 2003, Food Standards Code and Liquor Licensing Act 1990, Dairy Industry Act 1994 and Primary Produce Safety Act 2011 apply.

(4) TAS I4P2 to TAS I4P13 do not apply to—

(a) domestic dwellings classified as Class 1 buildings; or

(b) boarding houses or the like classified as Class 1 buildings; or

(c) tents, buildings or other structures used temporarily for serving meats to the public at any fair, show, race meeting or other public sports, games or amusements; or

(d) meat premises covered by TAS Part I6; or

(e) dairies covered by TAS Part I7; or

(f) live shellfish premises where live shellfish are being packed or handled for transport or transferral to shellfish processing premises; or

(g) premises that only sell pre-packaged food that is not potentially hazardous.

TAS I4P2 Design and construction

[2019: TAS H102 P1]

The design and construction of food premises must—

(a) be appropriate for the activities for which the premises are used; and

(b) provide adequate space for the activities to be conducted on the food premises and for the fixtures, fittings and equipment used for those activities; and

(c) permit the food premises to be effectively cleaned and, if necessary, sanitised; and

(d) to the extent that is practicable—

(i) exclude dirt, dust, odours, fumes, smoke and other contaminants; and

(ii) not permit the entry of pests; and

(iii) not provide harbourage for pests; and

(e) provide that the food premises is able to be used in such a manner that minimises opportunities for food contamination.

TAS I4P3 Water supply

[2019: TAS H102 P2]

(1) Food premises must have an adequate supply of water if water is to be used at the food premises for any of the activities conducted on the food premises.

(2) A food premises must use potable water for all activities that use water that are conducted on the food premises.

Limitations

If a food business demonstrates that the use of non-potable water for a purpose will not adversely affect the safety of the food handled by the food business TAS I4P3(2) does not apply.

TAS I4P4 Sewage and waste water disposal

[2019: TAS H102 P3]

Food premises must have a sewage and waste water disposal system that—

(a) will effectively dispose of all sewage and waste water; and

(b) is constructed and located so that there is no likelihood of the sewage and waste water polluting the water supply or contaminating food.

TAS I4P5 Storage of garbage and recyclables

[2019: TAS H102 P4]

Food premises must have facilities for the storage of garbage and recyclable matter that—

(a) adequately contain the volume and type of garbage and recyclable matter on the food premises; and

(b) enclose the garbage or recyclable matter, if this is necessary to keep pests and animals away from it; and

(c) are designed and constructed so that they may be effectively cleaned.

TAS I4P6 Ventilation

[2019: TAS H102 P5]

Food premises must have sufficient natural or mechanical ventilation to remove fumes, smoke and vapours from the food premises.

TAS I4P7 Lighting

[2019: TAS H102 P6]

Food premises must have lighting systems that provide sufficient natural or artificial light for the activities conducted on the food premises.

TAS I4P8 Floors

[2019: TAS H102 P7]

(1) Floors must be designed and constructed in a way that is appropriate for the activities conducted on the food premises.

(2) Floors must—

(a) be able to be effectively cleaned; and

(b) be unable to absorb grease, food particles or water; and

(c) be laid so that there is no ponding of water; and

(d) to the extent that is practicable, be unable to provide harbourage for pests.

Applications

The requirements for floors apply to the floors of all areas used for food handling, cleaning, sanitising and personal hygiene except the following areas—

(a) dining areas; and

(b) drinking areas; and

(c) other areas to which members of the public usually have access.

Exemptions

The following floors do not have to comply with TAS I4P8(2)—

(a) floors of temporary food premises, including ground surfaces, that are unlikely to pose any risk of contamination of food handled on the food premises; and

(b) floors of food premises that are unlikely to pose any risk of contamination of food handled on the food premises provided the food business has obtained approval for their use.

TAS I4P9 Walls and ceilings

[2019: TAS H102 P8]

Walls and ceilings—

(a) must be designed and constructed in a way that is appropriate for the activities conducted on the food premises; and

(b) must be provided where they are necessary to protect food from contamination; and

(c) provided in accordance with (b) must be—

(i) sealed to prevent the entry of dirt, dust and pests; and

(ii) unable to absorb grease, food particles or water; and

(iii) able to be easily and effectively cleaned; and

(d) must—

(i) be able to be effectively cleaned; and

(ii) to the extent that is practicable, be unable to provide harbourage for pests.

Applications

The requirements for walls and ceilings apply to the walls and ceilings of all areas used for food handling, cleaning, sanitising and personal hygiene except for the following areas—

(a) dining areas; and

(b) drinking areas; and

(c) other areas to which members of the public usually have access.

TAS I4P10 Hand washing facilities

[2019: TAS H102 P9]

(1) Food premises must have hand washing facilities that are located where they can be easily accessed by food handlers—

(a) within areas where food handlers work if their hands are likely to be a source of contamination of food; and

(b) if there are toilets on the food premises — immediately adjacent to the toilets or toilet cubicles.

(2) Hand washing facilities must be—

(a) permanent fixtures; and

(b) provided with a supply of warm running potable water; and

(c) of a size that allows easy and effective hand washing; and

(d) clearly designated for the sole purpose of washing hands, arms and face.

TAS I4P11 Fixtures, fittings and equipment

[2019: TAS H102 P10]

Fixtures, fittings and equipment must—

(a) be adequate for the production of wholesome food; and

(b) be fit for their intended use; and

(c) be designed, constructed, located and installed, and equipment must be located and, if necessary, installed, so that—

(i) there is no likelihood that they will cause food contamination; and

(ii) they are able to be easily and effectively cleaned; and

(iii) adjacent floors, walls, ceilings and other surfaces are able to be easily and effectively cleaned; and

(iv) to the extent that is practicable, they do not provide harbourage for pests; and

(d) have food contact surfaces—

(i) able to be easily and effectively cleaned and, if necessary, sanitised if there is a likelihood that they will cause food contamination; and

(ii) unable to absorb grease, food particles and water if there is a likelihood that they will cause food contamination; and

(iii) made of a material that will not contaminate food.

TAS I4P12 Storage facilities

[2019: TAS H102 P11]

Food premises must have adequate storage facilities—

(a) for the storage of items that are likely to be the source of contamination of food, including chemicals, clothing and personal belongings; and

(b) located where there is no likelihood of stored items contaminating food or food contact surfaces.

TAS I4P13 Refrigerated and cooling chambers

[2019: TAS H102 P12]

All refrigerated and cooling chambers must be constructed so that the stored products will not be contaminated.

Deemed-to-Satisfy Provisions

TAS I4D1 Application of Part

[2019: TAS H102.0]

(1) This Part applies to any premises where food intended for human consumption is manufactured, processed or sold and to which the following apply—

(a) Food Act 2003; or

(b) Liquor Licensing Act 1990; or

(c) Primary Produce Safety Act 2011; or

(d) Dairy Industry Act 1994.

(2) This Part includes, but is not limited to—

(a) bakehouses; and

(b) bar service areas; and

(c) premises for boning, curing, canning, mincing, pre-packing or other similar processes of preparation of meat for sale; and

(d) retail meat premises; and

(e) eating houses and tea shops; and

(f) fish shops; and

(g) kitchens in eating houses, restaurants, guest-houses, motels and hotels; and

(h) rooms for processing, manufacturing, packing, etc. of fruit and vegetables, dairy products, ice blocks, ices, meat-for-sale or other fish; and

(i) primary produce business premises regulated by or under a Food Safety Scheme made under the Primary Produce Safety Act 2011; and

(j) take-away-food stores; and

(k) breweries and wineries.

(3) This Part does not apply to—

(a) boarding houses or the like classified as Class 1 buildings; or

(b) tents, buildings or other structures used temporarily for serving meals to the public at any fair, show, race meeting or other public sports, games or amusements; or

(c) dairies covered by TAS Part I7; or

(d) live shellfish premises where live shellfish are being packed or handled for transport or transferral to shellfish processing premises; or

(e) premises that only sell pre-packaged food that is not potentially hazardous.

(4) In this Part, words and meanings as defined in the Food Act 2003, Food Standards Code and Liquor Licensing Act

1990, Dairy Industry Act 1994 and Primary Produce Safety Act 2011 apply.

TAS I4D2 Deemed-to-Satisfy Provisions

[2019: TAS H102.1]

Performance Requirements TAS I4P1 to TAS I4P13 are satisfied by complying with the relevant provisions of TAS I4D3 to TAS I4D18.

TAS I4D3 General requirements

[2019: TAS H102.2]

(1) The provision of—

(a) close-fitting windows and doors; and

(b) air intakes that do not draw in contaminated air; and

(c) air locks and self-closing doors to separate toilet areas, laundries and living areas from food handling areas; and

(d) mechanical ventilation that removes sources of contamination,

satisfies TAS I4P2(d)(i).

(2) The provision of—

(a) self-closing or pest-screened external doors; and

(b) mesh screens at opening windows or other ventilation openings; and

(c) sealing to drains, grease traps and ventilation pipes; and

(d) sealing to openings where pipes pass through external walls; and

(e) the installation of pest-proof flashings to doors,

satisfies TAS I4P2(d)(ii).

(3) The provision of—

(a) vermin-proof sealing; or

(b) filling; or

(c) access for inspection and cleaning of boxed-in areas,

satisfies TAS I4P2(d)(iii).

(4) The provision of a reticulated water supply from—

(a) a regulated entity; or

(b) a private water supply with on-site treatment,

which meets the Australian Drinking Water Guidelines, satisfies TAS I4P3(2).

Notes

'Regulated entity' has the same meaning as Water and Sewerage Industry Act 2008.

TAS I4D4 Pests and contaminants

[2019: TAS H102.3]

Premises where customers are served outside the premises through an opening, that has an appliance for the elimination of flies and mechanical ventilation adequate to exhaust air through the opening at a rate of not less than 5 litres per second for each square metre of opening, satisfies TAS I4P2(d).

TAS I4D5 Drains and pipes

[2019: TAS H102.4]

Premises satisfy TAS I4P4 where—

(a) a grease trap, an overflow (relief) gully or an untrapped opening connected directly with a drain or sewer, is not installed in a room used for preparation, processing, packing or storing of food for sale; and

(b) as far as is practicable, service pipes are concealed beneath the surface of walls, floors or ceilings, or are fixed clear of the wall, floor or ceiling, at such distance as to facilitate cleaning.

TAS I4D6 Offensive material and trade waste

[2019: TAS H102.5]

Where offensive material or trade waste is stored, a separate area or room which—

(a) is paved and easily cleanable; and

(b) is graded to drain to a suitable drainage system; and

(c) has available a supply of water under pressure,

satisfies TAS I4P5.

TAS I4D7 Ventilation

[2019: TAS H102.6]

A mechanical ventilating exhaust system complying with the requirements of AS/NZS 1668.1 and AS 1668.2 satisfies TAS I4P6.

TAS I4D8 Lighting

[2019: TAS H102.7]

A lighting system that—

(a) complies with AS 1680.1 and AS/NZS 1680.2.4; and

(b) in areas where open food is handled or stored, has light fittings which are—

(i) designed and constructed to prevent the contamination of food should the globe or tube shatter; and

(ii) free from any features that would harbour dirt, dust or insects or make the fitting difficult to clean,

satisfies TAS I4P7.

TAS I4D9 Floors, walls and ceilings

[2019: TAS H102.8]

(1) Floors, walls and ceilings constructed in accordance with Section 3 of AS 4674, satisfy TAS I4P8 and TAS I4P9.

(2) The wall and ceiling provisions of (1) do not apply to areas in which all food for sale is completely enclosed and otherwise protected from contamination by processing plants, other appliances or other means.

TAS I4D10 Separation of work place

[2019: TAS H102.9]

(1) A room where food for sale is processed, manufactured, prepared, deposited, treated, stored or packed, that does not have direct communication with a room containing sanitary facilities, living quarters, laundry, bathroom or garage or a room where animals are housed, satisfies TAS I4P9(b).

(2) 'Direct communication' means a doorway, a window or other opening in a wall between a food preparation or storage area opening directly on to a room described in (1).

(3) Access between the areas referred to in (2) via another room, a hallway, or an airlock, satisfies TAS I4P9(b).

TAS I4D11 Washbasins

[2019: TAS H102.10]

(1) Premises or places for preparation or storage of food for sale provided with not less than one washbasin complying with (2) within five metres of any activities where hands are likely to be a source of contamination of food, satisfies TAS I4P10.

(2) Each washbasin must—

(a) have hot and cold water through a common outlet; and

(b) have a capacity of at least 11 litres; and

(c) provide not less than 250 mm between the spout and the bottom of the basin; and

(d) be in a position that is not obstructed.

TAS I4D12 Sinks

[2019: TAS H102.11]

(1) Where equipment and utensils are required to be manually cleaned and sanitised, or food preparation requires a sink, premises that are provided with a suitably sized double bowl sink for equipment washing and a separate suitably sized sink for food preparation of stainless steel supplied with—

(a) hot and cold water; and

(b) in integral drainer on at least one side or a third bowl,

satisfies TAS I4P11.

(2) A sink installed adjacent to a wall or other vertical surface, that is fitted with an integral flashing to that wall or vertical surface to a height of not less than 150 mm, satisfies TAS I4P11.

(3) A sink provided with an integral surround not less than 150 mm wide except on sides with an integral flashing as in (2), satisfies TAS I4P11.

(4) A cleaner's sink separated from food storage and handling areas provided for the emptying of cleaning water, satisfies TAS I4P11.

TAS I4D13 Design, construction and installation of fixtures, fittings and equipment

[2019: TAS H102.12]

(1) The provision of fixtures, fittings and equipment designed, constructed and installed in accordance with clause 4.2 and clause 4.3 of AS 4674 satisfies TAS I4P11.

(2) The provision of—

(a) automatic equipment that uses water to sanitise utensils or other equipment and only operate for the purposes of sanitation when the water is at a temperature that will sanitise the utensils or equipment; or

(b) a sink that meets TAS I4D12,

satisfies TAS I4P11.

TAS I4D14 Storage of materials and equipment

[2019: TAS H102.13]

(1) Separate areas for the storage of fuel, cleaning compounds and general maintenance equipment provided so as to prevent contamination of the product in the event of a spillage of any other form of breakdown, satisfies TAS I4P12.

(2) A separate area for the storage of staff clothing and personal effects, satisfies TAS I4P12.

TAS I4D15 Food store

[2019: TAS H102.14]

An eating house provided with a dry-food store, satisfies TAS I4P12.

TAS I4D16 Meat premises

[2019: TAS H102.15]

Premises used for the preparation or sale of red meat, other than those licensed under the Primary Produce Safety Act 2011, that comply with—

(a) TAS Part I6; or

(b) the provisions of TAS I4D3 to TAS I4D14 and I4D18, satisfy in relation to building construction, the requirements of TAS I4P2 to TAS I4P13.

TAS I4D17 Dairy produce

[2019: TAS H102.16]

Definition:

(a) Dairy produce products include milk, colostrum, liquid milk products, cream and thickened cream, butter, butter concentrate, buttermilk, concentrated buttermilk, dairy blend, ghee, anhydrous milk fat (butter oil), casein, caseinate, cheese, whey, whey cream, concentrated whey cream, cultured milk, yoghurt, ice cream, ice cream mix, buttermilk powder, lactose powder, milk sugar, powdered milk, skim milk powder, whey powder, milk protein powder and other milk concentrates.

(b) Premises designed and constructed in compliance with the Export Control (Milk and Dairy) Orders, satisfy the special requirements of this code for premises to be used for the manufacture of dairy produce.

TAS I4D18 Refrigerated and cooling chambers

[2019: TAS H102.17]

The construction of a refrigerated chamber or cooling chamber installed in premises for storage of food complying with the requirements for that premises, satisfies TAS I4P13 where they have—

(a) internal and external panels adhered directly to the insulated core material to form an integral wall section with tight fitting edges resistant to penetration by liquids; and

(b) every joint caulked with a water-resistant, flexible sealer and finished in such a manner as to prevent migration of liquids into the core; and

(c) every intersection of walls with floors and walls with walls coved with a radius not less than 25 mm; and

(d) exposed slot-head screws or open-headed pop rivets filled with sealer; and

(e) service pipes and conduits concealed in floors, walls or ceilings, if practicable, or fixed on brackets to provide clearances of not less than 25 mm between the pipe and a wall and 100 mm between the pipe and a floor; and

(f) fittings not fixed over exposed pipes nor in a position to make difficult the cleaning of the pipe and surrounding area; and

(g) rat proof construction, and any inaccessible spaces between the low temperature room and surrounding walls, ceilings and fixtures proof against rats an vermin; and

(h) floor graded, as shown in Table TAS I4D18a, to drains located outside the chamber as near as practicable to the door opening; and

(i) drainage from cooling units within the chamber constructed in accordance with Table TAS I4D18b, draining to a trapped outlet located outside the chamber.

Insert TAS Table I4D18a as follows:

TAS Table I4D18a: Floor drainage of refrigerated cooling chambers

Chiller type	Floor slope
Active chillers	Not less than 1:50
Other chambers	Not less than 1:100

Insert TAS Table I4D18b as follows:

TAS Table I4D18b: Drainage from cooling units within refrigerated chambers or cooling chambers

Cooling unit type	Drainage requirements
Wall-mounted	Drain water must be contained and removed by either a wall-mounted channel or a spoon drain located under the coil.
Floor-mounted	Drain water must be confined by kerbs, of a height not less than 150 mm, and directed to a trapped drain outlet.
Ceiling-mounted	Drain water must be confined by suitable insulated drip trays directly connected to the drainage system.

TAS Part I5 Dining rooms and bar rooms

Introduction to this Part

This Part contains additional requirements for dining rooms and bar rooms.

Deemed-to-Satisfy Provisions

TAS I5D1 Application of Part

[2019: TAS H103.1]

(1) This Part applies to all dining rooms and bar rooms (excluding bar service areas) on licensed premises covered by the Liquor Licensing Act 1990.

(2) Dining rooms and bar rooms must provide for the comfort, convenience and health of customers.

TAS I5D2 Sanitary facilities

[2019: TAS H103.2]

(1) Separate sanitary facilities for male sand females must be provided in close proximity to each dining room and bar room in licensed premises.

(2) Where the sanitary facilities are not accessed from within the dining room or bar room, reasonable fixed protection from the elements must be provided.

TAS I5D3 Separation from other areas

[2019: TAS H103.3]

A dining room must not have a direct opening to living quarters, a laundry, bathroom or garage or a room where animals are housed.

TAS Part I6 Meat premises

Introduction to this Part

This Part contains additional requirements for meat premises.

Deemed-to-Satisfy Provisions

TAS I6D1 Application of Part

[2019: TAS H106.1]

(1) This Part is applicable to—

(a) meat premises processing animals, including game and poultry, and producing meat and meat products for human consumption; and

(b) pet food works licensed under the Primary Produce Safety Act 2011.

(2) Meat premises must be constructed in such a manner that—

(a) does not jeopardise animal welfare; and

(b) provides for hygienic processing of animals; and

(c) ensures the wholesomeness of meat and meat products.

TAS I6D2 Premises processing animals and meat

[2019: TAS H106.2]

Premises used for the processing of animals and meat for human consumption must comply with the relevant Parts and Sections of the Australian Standards listed below:

(a) Hygienic Production and Transportation of Meat and Meat Products for Human Consumption, AS 4696 - Part 7, Sections 19 to 21.

(b) Hygienic Production of Game Meat for Human Consumption, AS 4464 - Section 6.

(c) Construction of Premises and Hygienic Production of Poultry Meat for Human Consumption, AS 4465 - Part A, Sections 3 to 12.

(d) Hygienic Production of Rabbit Meat for Human Consumption, AS 4466 - Section 5.

(e) Hygienic Rendering of Animal Products, AS 5008 - Section 3.

(f) Hygienic Production of Ratite (Emu/Ostrich) Meat for Human Consumption, AS 5010 - Section 5.

(g) Hygienic Production of Natural Casings for Human Consumption, AS 5011 - Section 4.

(h) Hygienic Production of Pet Meat, PISC - Technical Report 88 - Sections, 6.1 to 6.7, 6.9 and 6.11.

TAS Part I7 Farm dairy premises

Introduction to this Part

This Part contains additional requirements for farm dairy premises.

Deemed-to-Satisfy Provisions

TAS I7D1 Application of Part

[2019: TAS H107.1]

(1) This Part is applicable to every farm dairy as covered by the Dairy Industry Act 1994.

(2) Dairies must be constructed in such a manner that contamination of milk can be avoided.

TAS I7D2 Milking sheds and holding yards

[2019: TAS H107.2]

(1) The walls (including the walls of a pit of a herringbone design milking shed) must be non-absorbent and easy to clean.

(2) The floor of a holding yard and a milking shed must be non-absorbent, easy to clean and free-draining.

(3) The lighting of a holding yard and a milking shed must be adequate for proper milking.

(4) The working space in a milking shed is to be sufficient to minimise the risk of contamination of milk during milking.

(5) Effluent from a holding yard and a milking shed is to be drained to a suitable point for disposal.

(6) The requirements of (1), (2) and (3) are satisfied if—

(a) the walls are constructed of well-compacted smooth finish concrete or other material sealed to be impervious to moisture; and

(b) the floors are constructed of well-compacted smooth finish concrete and are graded to a drain; and

(c) joints between wall sections and walls and walls and floors are sealed to prevent entry of water and pests; and

(d) artificial lighting is designed to comply with AS 1680.

TAS I7D3 Milk receiving area and milk storage room

[2019: TAS H107.3]

(1) A Milk Receiving Area and Milk Storage Room must—

(a) have internal surfaces that are smooth, non-absorbent, free-draining and easy to clean; and

(b) be constructed so as to prevent the entry of dust, insects, pests, birds and animals; and

(c) have adequate artificial lighting that—

(i) is located to provide a clear view of the milk for grading and measuring purposes; and

(ii) the lights over a bulk vat are to be protected to prevent glass entering the vat if the light is broken; and

(iii) have switches appropriately located in milk collection areas; and

(d) have adequate ventilation to aid the drying of floors and walls between milkings.

(2) The requirements of (1) are satisfied if—

(a) the floors are constructed of well-compacted, smooth finish concrete and graded to a drain; and

(b) the internal surfaces are smooth, sealed and washable; and

(c) joists between wall sections and walls and floors are sealed to prevent entry of water and pests; and

(d) artificial lighting is designed to comply with AS 1680; and

(e) all openings are fitted with doors, *windows* or screens; and

(f) ventilation is provided in accordance with F6D6.

TAS I7D4 Water supply

[2019: TAS H107.4]

An adequate and suitable supply of water must be available for plant sanitation, teat washing, milk cooling and vat rinsing.

TAS Part I8 Pharmacies

Introduction to this Part

This Part contains additional requirements for pharmacies.

Deemed-to-Satisfy Provisions

TAS I8D1 Application of Part

[2019: TAS H108.1]

(1) This Part applies to all pharmacy business premises registered under the Pharmacy Control Act.

(2) Pharmacies must be able to be secured against entry and the interior must be able to be supervised by a pharmacist.

TAS I8D2 Definition

[2019: TAS H108.2]

In this Part the term "dispensary" means the room or area within a pharmacy or other premises which a registered pharmaceutical chemist uses for the compounding or dispensing of prescriptions, medicines or drugs.

TAS I8D3 Pharmacy premises

[2019: TAS H108.3]

(1) Each premises used as a pharmacy must have—

(a) a dispensary for the compounding or dispensing of drugs and for the storage of material used in dispensing; and

(b) space for the storage of narcotic substances and poisons as *required* by the Poisons Regulations; and

(c) a place for unpacking of containers or cases and goods; and

(d) a room for storing merchandise not used in dispensing.

(2) A pharmacy may have one area set aside for retailing merchandise that is not compounded or dispensed.

TAS I8D4 Dispensary

[2019: TAS H108.4]

(1) A dispensary must be located—

(a) within a pharmacy in a position to enable a person in the dispensary to supervise the dispensary, storage areas for narcotic substances and poisons, the entrances to unpacking areas and areas for storing other substances, and the retail area; and

(b) separate from any place where goods are unpacked or where general merchandise, not used in dispensing, is stored.

(2) Each dispensary must be provided with—

(a) a sink and drainage board of impervious material moulded or manufactured in one piece; and

(b) a reticulated supply of hot and cold water capable of providing to the sink adequate quantities of water for dispensing purposes; and

(c) space for a dispensing bench with a working area not less than 1.4 m^2.

TAS I8D5 Security of dispensary

[2019: TAS H108.5]

(1) Every dispensary and enclosure set aside for the storage of narcotic substances and poisons must be able to be secured against entry.

(2) If a dispensary is located in a pharmacy that is capable of being secured against entry at all times while the dispensary is not in use, then the dispensary is deemed to be secured against entry.

TAS Part I9 Health service establishments

Introduction to this Part

This Part contains additional requirements for health service establishments.

Deemed-to-Satisfy Provisions

TAS I9D1 Application of Part

[2019: TAS H109.1]

(1) This Part applies to health service establishments as defined in the Health Service Establishment Act 2006 including—

(a) a day procedure centre; or

(b) a private hospital; or

(c) a residential care service building.

(2) Health service establishments must be able to be easily cleaned and must have adequate space for patients.

TAS I9D2 Design and construction of health service establishments

[2019: TAS H109.2]

Every health service establishment must be constructed and maintained in accordance with the Australasian Health Facility Guidelines.

TAS Part I10 Mortuaries

Introduction to this Part

This Part contains additional requirements for mortuaries.

Deemed-to-Satisfy Provisions

TAS I10D1 Application of Part

[2019: TAS H112.1]

(1) This Part applies to any premises used for the storage or preparation for burial, cremation or disposal by other means, of bodies of deceased persons.

(2) Mortuaries must be constructed in a manner that will ensure the health of staff and the general public.

TAS I10D2 Layout of mortuary

[2019: TAS H112.2]

(1) A mortuary may be integral with the remainder of a building but must be separated physically from all public areas of that building.

(2) Each mortuary at which bodies are prepared for burial, cremation or other disposal must be provided with a body preparation room—

(a) capable of being isolated from the remainder of the premises; and

(b) having a *floor area* not less than $10m^2$.

(3) A vehicle reception area or garage must be provided adjacent to and with direct access to the storage room or body preparation room to ensure that the transfer of uncoffined bodies is screened from public view.

(4) Access to toilet and shower facilities from any other part of the mortuary premises must be only by way of an air lock.

TAS I10D3 Construction of body preparation room

[2019: TAS H112.3]

(1) The floor must be—

(a) of impervious material with a smooth, unbroken surface; and

(b) uniformly graded to a floor drain.

(2) All walls and partitions must be of concrete or masonry with a smooth, unbroken finish for ease of cleaning.

(3) All joints between the floor, walls, partitions, ceiling, ventilation grilles, fittings, pipework, *windows* and light fittings must be sealed with impervious material for ease of cleaning.

(4) All joints between the floor and walls or partitions must be coved for ease of cleaning.

(5) The body preparation room must be provided with at least one washbasin, fitting with elbow or foot-operated taps, and an adequate supply of hot and cold water.

(6) The body preparation room must be provided with refrigerated storage facilities—

(a) With sufficient capacity for the storage of at least two adult bodies; and

(b) Capable of maintaining an internal temperature between 1°C and 5°C.

TAS I10D4 Water supply and sewerage

[2019: TAS H112.4]

Each mortuary with a body preparation room must be connected to—

(a) a permanent water supply with a physical discontinuity, provided by a registered break tank or reduced pressure zone device, between the water supply and all equipment, appliances, fittings and areas in the mortuary; and

(b) a water carriage sewerage system.

TAS Part I11 Foundries

Introduction to this Part

This Part contains additional requirements for foundries.

Deemed-to-Satisfy Provisions

TAS I11D1 Application of Part

[2019: TAS H113.1]

(1) This Part is applicable to every building or premises on which foundry operations are undertaken.

(2) Foundries must provide for the comfort and safety of workers on the premises.

TAS I11D2 General

[2019: TAS H113.2]

(1) Every floor in a foundry must be level and, in places other than where molten metal is poured, must be composed or similar material or wooden blocks.

(2) Every part of a foundry must be not less than 4.2 m high—

(a) where a ceiling is provided, measured from the floor to the ceiling; or

(b) where a ceiling is not provided, measured from the floor to the lowest part of the roof.

TAS I11D3 Cupola charging platform

[2019: TAS H113.3]

(1) The floors of cupola charging platforms must be—

(a) of heavy timber or non-slip steel plate; and

(b) securely fixed in position; and

(c) level.

(2) All parts of the cupola charging platform must be covered by a roof not less than 3 m above the platform.

(3) A cupola charging platform must have—

(a) a wall, not less than 1 m high, measured from the floor of the platform, constructed to surround the platform; and

(b) the side between the top of the wall and the roof suitably waterproofed an ventilated.

(4) A properly constructed access stair or ramp must be provide to give access to every cupola charging platform and must comply with AS 1657.

TAS I11D4 Deep moulds and pits

[2019: TAS H113.4]

Deep moulds or pits, for permanent use—

(a) must be lined with bricks, concrete, or other suitable material in such a manner as to provide adequate reinforcement and to keep the pit or mould in a dry condition; and

(b) must be securely fenced by means of a wall of adequate construction, railings or chains and stanchions raised, in each case, to a height not less than 1 m above the surface of the surrounding floor.

TAS I11D5 Pot furnaces

[2019: TAS H113.5]

Where pot furnaces are below ground level, the pit must be covered by a substantial grating at the point at which metal is removed from the furnace, and must at all other times be securely fenced as in TAS I11D4(b)

TAS Part I12 Premises for manufacture or processing of glass reinforced plastics

Introduction to this Part

This Part contains additional requirements for premises used for the manufacture or processing of glass reinforced plastics.

Deemed-to-Satisfy Provisions

TAS I12D1 Application of Part

[2019: TAS H114.1]

(1) This Part is applicable to every building in which glass reinforced plastics are manufactured or processed.

(2) Premises for manufacture or processing of glass reinforced plastic must—

(a) provide for the safety and comfort or workers; and

(b) be constructed in a manner that will avoid the spread of fire within the building and to other buildings.

TAS I12D2 Separation from other buildings

[2019: TAS H114.2]

A building for the manufacture or processing of glass reinforced plastics must be—

(a) separated from other buildings or parts of an occupancy by means of impervious walls with FRL at least 120/120/120; or

(b) separated from all other buildings by a clear space of not less than 6 m.

TAS I12D3 Rise in storeys

[2019: TAS H114.3]

The building must be of single *storey* construction.

TAS I12D4 Maximum floor areas

[2019: TAS H114.4]

The *floor area* of any building or fire-separated section must not exceed the relevant maximum *floor area* set out in Table TAS I12D4.

Insert TAS Table I12D4 as follows:

TAS Table I12D4: Maximum floor area of buildings for manufacture or processing of glass reinforced plastics or isocyanates

Type A building construction	Type B building construction	Type C building construction
Not sprinklered: 1500 m^2	Not sprinklered: 1200 m^2	Not sprinklered: 1000 m^2
Sprinklered: 6000 m^2	Sprinklered: 5000 m^2	Sprinklered: 3000 m^2

TAS I12D5 Required exits

[2019: TAS H114.5]

(1) Each fire-separated section of a building which is a work place must have at least two *exits* for escape purposes and the number and location of *exits* must be such that any point on the floor is not further than 20 m from one of the *exits*.

(2) Only *exits* with vertically hinged swinging doors may be considered as *exits* for the purposes of this clause.

TAS I11D6 Hand laminating and spray depositing

[2019: TAS H114.6]

The walls and floors of areas to be used for hand laminating and spray depositing must be constructed of *non-combustible* materials.

TAS I12D7 Ventilation

[2019: TAS H114.7]

(1) Mechanical or natural ventilation must be via low-level, exhaust ducting in a wall and a fixed, open, floor-level, fresh-air inlet ducting in the opposite wall such as to ensure a cross flow of the ventilation over the complete working area.

(2) Mechanical ventilation must provide not less than 6 air changes per hour.

(3) The ventilation fan and exhaust ducting must be arranged in such a manner as to—

(a) produce a negative pressure within any exhaust ducting within the work place so that a leak in the ducting will not vent exhaust air back in to the work place; and

(b) vent the exhaust air to the atmosphere so as to prevent recirculation of that exhaust air.

TAS I12D8 Smoke and heat roof vents

[2019: TAS H114.8]

Each fire-separated section must be provided with *automatic* smoke and heat roof vents.

TAS Part I13 Premises for production of processing of isocyanates

Introduction to this Part

This Part contains additional requirements for premises used for the production of processing of isocyanates.

Deemed-to-Satisfy Provisions

TAS I13D1 Application of Part

[2019: TAS H115.1]

(1) This Part is applicable to every building in which isocyanate production or processing is undertaken.

(2) Premises for production or processing of isocyanates must—

(a) provide for the safety and comfort of workers; and

(b) be constructed in a manner that will avoid the spread of fire within the building and to other buildings.

TAS I13D2 Areas of work places

[2019: TAS H115.2]

Work places in which an isocyanate industry is carried out must be divided into the following divisional areas:

(a) Administration and staff amenities.

(b) Workshop.

(c) Bulk stores.

(d) Curing room.

(e) Processing plant.

(f) Raw materials plant.

(g) Manufacture.

TAS I13D3 Separation from other areas and buildings

[2019: TAS H115.3]

(1) Each of the divisional areas *required* by TAS I13D2 other than the administration and staff amenities building, must be—

(a) separated from each of the other divisional areas by means of an impervious wall with an FRL of not less than 120/120/120; or

(b) separated from all other buildings by a clear space of not less than 6 m.

(2) Notwithstanding the distance requirements of (1), bulk stores of polyols and bulk stores of isocyanates must comply with the requirements of the Work Health and Safety Act.

TAS I13D4 Rise in storeys

[2019: TAS H115.4]

The building must be of single *storey* construction.

TAS I13D5 Maximum floor areas

[2019: TAS H115.5]

The *floor area* of any building or fire-separated section must not exceed the area shown in Table TAS I12D4.

TAS I13D6 Required exits

[2019: TAS H115.6]

(1) Every building and divisional area of a work place must have not less than 2 *exits* for escape purposes.

(2) The number and location of the *exits* must be such that any point on the floor is not more than 20 m from one of the *exits*.

(3) Only *exits* with vertically hinged swinging doors may be considered as *exits* for the purposes of this clause.

TAS I13D7 Bulk stores for polyols and isocyanates

[2019: TAS H115.7]

(1) A bulk store for polyols must be constructed from *non-combustible* materials and have a smooth impervious concrete floor and it must protect the polyols from direct exposure to the sun's radiation.

(2) A bulk store for isocyanates must—

(a) be constructed from *non-combustible* materials, have a smooth impervious concrete floor, and must protect the isocyanate containers from direct exposure to the sun; and

(b) if it is used for the storage of either TDI or HDI and is not an open sided building, be fitted with mechanical ventilation so that the TLV is not exceeded at any time provided that the ventilation must provide not less than 6 air changes per hour.

(3) The area around both a polyol bulk store and an isocyanate bulk store must be bunded, the bund or bunds must ensure separation of the polyol and isocyanate areas and each bund must have a capacity of 10% more than the storage capacity of the largest tank it protects.

TAS I13D8 Curing room

[2019: TAS H115.8]

The curing room for the storage of newly produced flexible polyurethane foam must be constructed of *non-combustible* materials with a smooth impervious concrete floor and fitted *automatic* fire vents in the roof.

TAS Part I14 Premises for electro-plating, electro-polishing, anodising or etching

Introduction to this Part

This Part contains additional requirements for premises used for electro-plating, electro-polishing, anodising or etching.

Deemed-to-Satisfy Provisions

TAS I14D1 Application of Part

[2019: TAS H116.1]

(1) This Part is applicable to every building where any of the processes of electro-plating, electro-polishing, anodising or etching are undertaken.

(2) Premises for electro-plating, electro-polishing, anodising or etching must—

(a) provide for the safety and comfort of workers; and

(b) be constructed in a manner that will prevent the escape of liquids and atmospheric contaminants to other areas of the building.

TAS I14D2 Floors

[2019: TAS H116.2]

The floor of every plating area must be—

(a) so graded as to—

(i) permit easy flushing with water; and

(ii) prevent liquids from flowing from the area into other parts or the work place; and

(b) chemically resistant to the solutions used in the process.

TAS I14D3 Height of plating area

[2019: TAS H116.3]

Every part of a plating area must be not less than 2.7 m in height—

(a) measured from the floor to the ceiling if a ceiling is provided; or

(b) measured from the floor to the lowest part of the roof if a ceiling is not provided.

TAS I14D4 Air space

[2019: TAS H116.4]

In every plating area there must be not less than 14 m^3 of air space for each person employed and, in the calculation of such space, the height taken into account must not exceed 4.2 m.

TAS I14D5 Ceiling construction

[2019: TAS H116.5]

The ceiling of a plating area must be so constructed as to prevent, so far as is practicable, atmospheric contaminants from escaping into rooms or work places, situated above the level of the ceiling.

TAS Part I15 Premises for lead processing

Introduction to this Part

This Part contains additional requirements for premises used for lead processing.

Deemed-to-Satisfy Provisions

TAS I15D1 Application of Part

[2019: TAS H117.1]

(1) This Part is applicable to every building in which lead processes are used.

(2) Premises used for lead processing must—

(a) provide for the safety and comfort of workers; and

(b) be constructed in a manner that will minimise the lodgement of dust and must be capable of being flushed with water.

TAS I15D2 Floors

[2019: TAS H117.2]

(1) The floor of every work place where a lead process is used must be—

(a) so constructed of concrete or other suitable material as to be smooth and impervious to fluids; and

(b) graded and properly drained to permit flushing with water.

(2) The mater of which the floor is constructed must be applied to the walls to a height of not less than 75 mm in such a fashion that the angle between the walls and the floor is coved for easy cleaning.

TAS I15D3 Height of lead processing areas

[2019: TAS H117.3]

Every part of a lead processing area must be not less than 2.7 m in height—

(a) where a ceiling is provided, measured from the floor to the ceiling; or

(b) where a ceiling is not provided, measured from the floor to the lowest part of the roof.

TAS I15D4 Air space and floor space

[2019: TAS H117.4]

(1) In every lead processing area there must be not less than 14 m^3 of air space for each person employed therein, and in the calculation of such space the maximum height taken must be not greater than 4.2 m.

(2) The total floor space for the persons employed in such area, exclusive of space used for storage, must be not less than 3.3 m^2 for each person so employed.

TAS I15D5 Interior of lead processing areas

[2019: TAS H117.5]

(1) The inner surfaces of the walls of every lead processing area must be of a smooth material impervious to fluids and must not contain any projections on which dust may lodge.

(2) The interior construction of the ceiling or roof must, so far as is practicable, be such that dust will not settle on it.

TAS I15D6 Dust collection

[2019: TAS H117.6]

Any areas in which dust-forming lead particles are manipulated, moved or treated must be served by a mechanical exhaust ventilation system capable of safely and effectively collecting all dust.

TAS I15D7 Isolation of certain processes

[2019: TAS H117.7]

Where any process of pasting of electric accumulator plates or drying of paste plates, or melting down of pasted plates or of formation with tacking in the electric accumulator industry or of manipulation of dry oxide or lead, is to be carried out in the same room as any other lead process, the process of pasting, drying, melting, formation or manipulation must be isolated from one another and from any other lead process—

(a) by a partition extending from the floor to the ceiling in the case of a room having a ceiling not more than 3.6 m in height, or to a height of 2.7 m in any other case; or

(b) by some other suitable method.

TAS I15D8 Drying room shelves

[2019: TAS H117.8]

The racks or shelves provided in any drying room must be not more than 2.6 m from the floor nor more than 650 mm in width except that, in the case of racks or shelves set or drawn from both sides, the total width must not exceed 1.3 m.

TAS I15D9 Washing facilities

[2019: TAS H117.9]

Washing facilities served with running hot and cold water for the use of all employees engaged in a lead process must be provided consisting of—

(a) one washbasin for each 5 employees, or part thereof; and

(b) one shower bath for each 8 employees, or part thereof.

TAS I15D10 Change rooms

[2019: TAS H117.10]

In every work place in which lead is processed there must be provided two suitable furnished change rooms for the use of employees as follows—

(a) one of the change rooms must be used for taking off, storing, and putting on of the street clothing of employees; and

(b) the other of the change rooms must be used for taking, storing, and putting on of overalls or other clothing work in any work room; and

(c) each change room must be so constructed and situated as to prevent the entry into the room of dust and fumes generated in a work room; and

(d) each change room must be in close proximity to the washing facilities *required* in TAS I15D9.

TAS Part I16 Early childhood centres and school age care facilities

Introduction to this Part

This Part contains additional requirements for *early childhood centres* and *school age care facilities*.

Objectives

TAS I16O1 Objective

[2019: TAS H122 O1]

The Objective of this Part is to regulate the physical specification of *early childhood centres* and *school age care facilities* at which education and care is provided.

Functional Statements

TAS I16F1 Early childhood centres and school age care facilities

[2019: TAS H122 F1]

An *early childhood centre* and *school age care facility* must be designed and constructed to provide a safe environment and provide for the health, safety and well-being of the children, parents and staff using the centre.

Performance Requirements

TAS I16P1 Design and construction

[2019: TAS H122 P1]

The design and construction of an *early childhood centre* and *school age care facility* must to the degree necessary, provide an environment that is spacious enough to prevent overcrowding, and supports a range of daily activities and routines including—

(a) indoor playing; and

(b) outdoor playing; and

(c) sleeping.

Applications

TAS I16P1 applies to *early childhood centres* and *school age care facilities* approved under the Education and Care Services National Law (Application) Act 2011 or licensed under the Child Care Act 2001.

TAS I16P2 Health and amenity

[2019: TAS H122 P2]

An *early childhood centre* and *school age care facility*, must to the degree necessary, have sufficient space and facilities to ensure a healthy, safe and comfortable environment for children, staff and parents including—

(a) sanitary facilities; and

(b) nappy changing facilities; and

(c) laundry facilities; and

(d) food preparation facilities; and

(e) reception, administration and staff facilities; and

(f) storage facilities; and

(g) suitable—

(i) floor surfaces; and

(ii) lighting and ventilation; and

(iii) fire safety provisions; and

(iv) windows and glazing; and

(v) heating and cooling.

Applications

TAS I16P2 applies to *early childhood centres* and *school age care facilities* approved under the Education and Care Services National Law (Application) Act 2011 or licensed under the Child Care Act 2001.

TAS I16P3 Perimeter fencing and barriers

[2019: TAS H122 P3]

An *early childhood centre* and *school age care facility* must to the degree necessary, have fencing around the perimeter of any outdoor play space, and any identified hazard isolated by fences, barriers and gates.

Applications

TAS I16P3 applies to *early childhood centres* and *school age care facilities* approved under the Education and Care Services National Law (Application) Act 2011 or licensed under the Child Care Act 2001.

Deemed-to-Satisfy Provisions

TAS I16D1 Application of Part

[2019: TAS H122.0]

This Part applies to *early childhood centres* and *school age care facilities* approved under the Education and Care Services National Law (Application) Act 2011 or licensed under the Child Care Act 2001.

TAS I16D2 Deemed-to-Satisfy Provisions

[2019: TAS H122.1]

(1) *Performance Requirement* TAS I16P1 is satisfied by complying with the relevant provisions of the Early Childhood Centre and School Age Care Facilities Code.

(2) *Performance Requirement* TAS I16P2 is satisfied by complying with the relevant provisions of the Early Childhood Centre and School Age Care Facilities Code.

(3) *Performance Requirement* TAS I16P3 is satisfied by complying with the relevant provisions of the Early Childhood Centre and School Age Care Facilities Code.

TAS Part I18 Temporary structures

Introduction to this Part

This Part contains additional requirements for *temporary structures*.

Performance Requirements

TAS I18P1 Application of Part

[2019: TAS H123 (Application)]

TAS I18P2 to TAS I18P16 only apply to a *temporary structure* that—

(a) is used by the public as a place of assembly as described in the Public Health Act 1997; and

(b) is a temporary structure as described in the Building Act 2016.

TAS I18P2 Safety and serviceability

[2019: TAS H123 P1]

A *temporary structure* must, to the degree necessary, be capable of sustaining at an acceptable level of safety and serviceability the most adverse combination of loads and other actions to which it may reasonably be expected to be subjected.

TAS I18P3 Resistance to the spread of fire

[2019: TAS H123 P2]

The material used in a *temporary structure* must, to the degree necessary, be capable of resisting the spread of fire to limit the generation of smoke and heat, and any toxic gases likely to be produced.

TAS I18P4 Access

[2019: TAS H123 P3]

(1) Access must be provided, to the degree necessary, to enable safe, equitable and dignified movement of people to and within a *temporary structure*.

(2) So that people can move safely to and within a *temporary structure*, it must have—

(a) walking surfaces with safe gradients; and

(b) stairways and ramps with slip-resistant walking surfaces; and

(c) suitable handrails where necessary to assist and provide stability to people using a stairway or ramp.

(3) Access for people with disabilities must be provided to and within a *temporary structure*, including to any public sanitary facilities and all areas normally used by the *public*.

(4) If fixed seating is provided in a *temporary structure*, an appropriate number of wheelchair spaces must be provided.

TAS I18P5 Exits

[2019: TAS H123 P4]

(1) *Exits* must be provided to the degree necessary, from a *temporary structure* to enable the safe evacuation of occupants, with their number, location and dimensions being appropriate to the—

(a) travel distances to *exits*; and

(b) number, mobility and other characteristics of the occupants; and

(c) function or use of the structure.

(2) So that occupants can safely evacuate a *temporary structure*, paths of travel to *exits* must have dimensions appropriate to the—

(a) number, mobility and other characteristics of the occupants; and

(b) function or use of the structure.

TAS I18P6 Fall prevention

[2019: TAS H123 P5]

Where a person could fall 1 m or more, due to a sudden change of level within or associated with a *temporary structure*, a barrier must to the degree necessary, be provided which must be—

(a) continuous and extend for the full extent of the hazard; and

(b) of a height to protect people from accidentally falling from the level; and

(c) constructed to prevent people falling through the barrier; and

(d) capable of restricting the passage of children; and

(e) of a strength and rigidity to withstand the foreseeable impact of people and where appropriate, the static pressure or people pressing against it.

TAS I18P7 Lighting

[2019: TAS H123 P6]

A level of illumination for safe evacuation from a *temporary structure* in an emergency must be provided, to the degree necessary, appropriate to the—

(a) function or use of the structure; and

(b) size of the structure; and

(c) distance of travel to an *exit*.

TAS I18P8 Identification of exits

[2019: TAS H123 P7]

To facilitate evacuation from a *temporary structure* suitable signs or other means of identification must, to the degree necessary—

(a) be provided to identify the location of *exits*; and

(b) guide the occupants to the *exits*; and

(c) be clearly visible to the occupants; and

(d) operate in the event of power failure for a sufficient time for occupants to safely evacuate.

TAS I18P9 Fire-fighting equipment

[2019: TAS H123 P8]

Fire equipment must be installed in a *temporary structure* to the degree necessary, to allow the occupants to undertake initial attack on a fire appropriate to the—

(a) function or use of the structure; and

(b) fire hazard.

TAS I18P10 Sanitary facilities

[2019: TAS H123 P9]

Sanitary facilities for personal hygiene must be provided in a convenient location associated with a *temporary structure*, to the degree necessary, appropriate to the—

(a) function or use of the structure; and

(b) number and gender of the occupants; and

(c) disability or other particular needs of the occupants.

TAS I18P11 Artificial lighting

[2019: TAS H123 P10]

(1) A *temporary structure* must be provided with natural or artificial lighting to enable the safe use and movement of people using the structure.

(2) Lighting must be installed to the degree necessary, to provide a level of illumination appropriate to the function or use of a *temporary structure* to enable safe use and movement by the occupants.

TAS I18P12 Ventilation

[2019: TAS H123 P11]

(1) A *temporary structure* must be provided with a means of ventilation which will maintain adequate air quality.

(2) Ventilation must be provided to the degree necessary, to a level appropriate to the function or use of a *temporary structure*.

TAS I18P13 Electrical services

[2019: TAS H123 P12]

Electrical services must be installed to the degree necessary, to provide a level of safety appropriate to the environment and function or use of a *temporary structure* by the occupants.

TAS I18P14 Heating appliances

[2019: TAS H123 P13]

Where provided for a *temporary structure*, a heating appliance and its associated components must be installed to the degree necessary—

(a) to withstand the temperatures likely to be generated by the appliance; and

(b) so that it does not raise the temperature of any structural element to a level that would adversely affect the element's physical or mechanical properties or function; and

(c) so that hot products of combustion will not—

(i) escape through the walls of the associated components; and

(ii) discharge to a position that will cause fire to spread to nearby combustible materials or allow smoke to penetrate the *temporary structure*; and

(d) to reduce the likelihood of fire and harmful emissions spreading beyond the appliance.

TAS I18P15 Tiered seating

[2019: TAS H123 P14]

A *temporary structure* of tiered seating must be designed and constructed to the degree necessary, to provide for the safety of occupants and orderly means of evacuation in an emergency.

TAS I18P16 Safe environment

[2019: TAS H123 P15]

A *temporary structure* must, to the degree necessary, be a safe and hazard free environment for the people using the structure.

Deemed-to-Satisfy Provisions

TAS I18D1 Application of Part

[2019: TAS H123.0]

This Part only applies to a *temporary structure* that—

(a) is used by the *public* as a place of assembly as described in the Public Health Act 1997; and

(b) is a *temporary structure* as described in the Building Act 2016.

TAS I18D2 Deemed-to-Satisfy Provisions

[2019: TAS H123.1]

Performance Requirements TAS I18P1 to TAS I18P16 are satisfied by complying with the provisions of the ABCB Temporary Structures Standard, except for the following:

(a) Disability access requirements, which are included in TAS I18D3.

(b) Lighting requirements, which are included in TAS I18D4.

(c) Ventilation requirements, which are included in TAS I18D5.

(d) Electrical requirements, which are included in TAS I18D6.

(e) Heating appliance requirements, which are included in TAS I18D7.

TAS I18D3 Access

[2019: TAS H123.4]

(1) Access for people with disabilities must be provided to and within a *temporary structure* by means of a continuous path of travel.

(2) Access for people with disabilities must be provided to—

(a) any public sanitary facilities; and

(b) all areas normally used by the *public* but excluding those areas only used by persons working in the *temporary structure*.

(3) If fixed seating is provided, in a *temporary structure*, wheelchair spaces must be provided not less than—

(a) 1 wheelchair space for up to 100 seats; and

(b) 2 wheelchair spaces for 100 - 200 seats; and

(c) an additional wheelchair space for each additional 200 seats or part thereof.

(4) Parts of a *temporary structure* required to be accessible must comply with AS 1428.1.

TAS I18D4 Lighting

[2019: TAS H123.11]

(1) Natural or artificial lighting must be provided to all enclosed areas in a *temporary structure*.

(2) Natural lighting must as far as practicable be not less than 10% of the floor area of the enclosed area.

(3) The artificial lighting system must as far as practicable comply with the relevant provisions of AS 1680 Parts 1, 2.0, 2.1, 2.2 and 2.3.

TAS I18D5 Ventilation

[2019: TAS H123.12]

(1) Natural ventilation or mechanical ventilation must be provided to all enclosed areas in a *temporary structure*.

(2) Natural ventilation must as far as practicable consist of openings or devices which can be opened with an aggregate opening of not less than 5% of the floor area of the enclosed area.

(3) Mechanical ventilation must as far as practicable comply with the relevant provisions of AS 1668.2.

TAS I18D6 Electrical

[2019: TAS H123.13]

All electrical installations in a *temporary structure* must be installed in accordance with AS/NZS 3000.

TAS I18D7 Heating appliances

[2019: TAS H123.14]

The installation of a stove, heater or similar appliance in a *temporary structure* must as far as practicable comply with the following standards:

(a) Domestic oil-fired appliances – Installation: AS 1691.

(b) Domestic solid-fuel burning appliances – Installation: AS/NZS 2918.

(c) LP gas portable mobile appliances: AS 2658.

TAS Part I17 Premises where work is undertaken on gas-fuelled vehicles

Introduction to this Part

This Part contains additional requirements for premises where work is undertaken on gas-fuelled vehicles.

Deemed-to-Satisfy Provisions

TAS I17D1 Application of Part

[2019: TAS H124.1]

This Part is applicable to every building where work is undertaken on gas-fuelled vehicles.

TAS I17D2 Working areas

[2019: TAS H124.2]

The working area of a building where work is undertaken on a gas-fuelled vehicle is to be designed and constructed to comply with the requirements for premises in AS 2746 Working areas for gas-fuelled vehicles.

Section J Energy efficiency

TAS Part J3 Elemental provisions for a sole-occupancy unit of a Class 2 building or a Class 4 part of a building

This Part is deleted from the BCA in Tasmania. In Tasmania, for a Class 2 building and Class 4 part of a building, Section J is replaced with Section J of BCA 2019 Amendment 1.

Schedule 1 Definitions

Centre-based care class 4 facility: A facility as defined in Centre Based Care Class 4 Standards.

Centre-based care class 5 facility: A facility as defined in Centre Based Care Class 5 Standards.

Early childhood centre

Any premises or part thereof providing or intending to provide a centre-based education and care service within the meaning of the Education and Care Services National Law Act 2010 (Vic), the Education and Care Services National Regulations and centre-based services that are licensed or approved under State and Territory children's services law, but excludes—

(a) education and care primarily provided to school aged children in outside school hours settings; and

(b) services licensed as *centre-based care class 4* under the Child Care Act 2001.

Expert judgement

For Volume Three, the judgement of a person who has the qualifications and expertise to determine whether a *Plumbing or Drainage Solution* complies with the *Performance Requirements*.

Explanatory Information

The level of qualification and/or experience required to determine whether a *Plumbing or Drainage Solution* complies with the *Performance Requirements* may differ depending on the degree of complexity and the requirements of the Tasmanian Building Act. Practitioners should seek advice from the *Permit Authority*.

Permit Authority: A permit authority as defined in the Building Act 2016.

Public: Includes any person working in an enclosed public place.

School age care facility: Is a facility providing care for children (primarily) 5 years or older in an outside of school hours setting, either approved or licenced under Education and Care Services National Law (Application) Act 2011 or the Child Care Act 2001.

Temporary structure: Includes any–

(a) booth, tent or other temporary enclosure, whether or not part of the booth, tent or enclosure is permanent; or

(b) temporary seating structure; or

(c) other structure prescribed under the Building Act 2016.

Schedule 2 Referenced documents

Insert TAS Table 1 as follows:

TAS Table 1: Schedule of referenced documents

No.	Date	Title	Volume One	Volume Two	Housing Provisions
AS 1657	2018	Fixed platforms, walkways, stairways and ladders – Design, construction and installation	TAS I10D3	N/A	N/A
AS/NZS 1668 Part 1	2015	The use of ventilation and air-conditioning in buildings: Fire and smoke control in multi-compartment buildings	TAS I4D7	N/A	N/A
AS 1668 Part 2	2012	The use of ventilation and air-conditioning in buildings: Mechanical ventilation in buildings	TAS I4D7, TAS I16D5	N/A	N/A
AS/NZS 1680 Part 1	2006	Interior lighting: General principles and recommendations	TAS I4D8, TAS I7D2, TAS I7D3, TAS I16D4	N/A	N/A
AS/NZS1680 Part 2.1	2008	Interior lighting: Circulation spaces and other general areas	TAS I7D2, TAS I7D3, TAS I16D4	N/A	N/A
AS/NZS1680 Part 2.2	2008	Interior lighting: Office and screen based tasks	TAS I7D2, TAS I7D3, TAS I16D4	N/A	N/A
AS/NZS1680 Part 2.3	2008	Interior lighting: Education and training facilities	TAS I7D2, TAS I7D3, TAS I16D4	N/A	N/A
AS/NZS1680 Part 2.4	2017	Interior lighting: Industrial tasks and processes	TAS I4D8, TAS I7D2, TAS I7D3	N/A	N/A
AS/NZS1680 Part 2.5	2018	Interior lighting: Hospitals and medical tasks	TAS I7D2, TAS I7D3	N/A	N/A
AS 2658	2008	LP Gas – Portable and mobile appliances	TAS I16D7	N/A	N/A
AS 2746	2008	Working areas for gas fuelled vehicles	TAS I17D2	N/A	N/A

No.	Date	Title	Volume One	Volume Two	Housing Provisions
AS/NZS 3000	2018	Electrical installations (known as the Australian/New Zealand Wiring Rules)	TAS I16D6	N/A	N/A
AS 4464	2007	Hygienic production of game meat for human consumption	TAS I6D2	N/A	N/A
AS 4465	2006	Construction of premises and hygienic production of poultry meat for human consumption	TAS I6D2	N/A	N/A
AS 4466	1998	Hygienic production of rabbit meat for human consumption	TAS I6D2	N/A	N/A
AS 4674	2004	Design, construction and fit-out of food premises (Clauses 4.2 and 4.3)	TAS I4D9, TAS I4D13	N/A	N/A
AS 4696	2007	Hygienic production and transportation of meat and meat products for human consumption	TAS I6D2	N/A	N/A
AS 5008	2007	Hygienic rendering of animal products	TAS I6D2	N/A	N/A
AS 5010	2001	Hygienic production of ratite (emu/ostrich) meat for human consumption	TAS I6D2	N/A	N/A
AS 5011	2001	Hygienic production of natural casings for human consumption	TAS I6D2	N/A	N/A
ABCB	—	Temporary Structures Standard	TAS I16D2	N/A	N/A

No.	Date	Title	Volume One	Volume Two	Housing Provisions
Australasian Health Facility Guidelines	—	N/A	TAS I9D2	N/A	N/A
BCA 2019 Amendment 1	2019	Building Code of Australia	TAS Section J	TAS Part H6	TAS Section 13
Centre Based Care Class 4 Standards	N/A	Tasmanian Licencing Standards for Centre Based Child Care Class 4	TAS Schedule 1	TAS Schedule 1	TAS Schedule 1
Centre Based Care Class 5 Standards	N/A	Tasmanian Licencing Standards for Centre Based Child Care Class 5 (0-12 years)	TAS Schedule 1	TAS Schedule 1	TAS Schedule 1
Child Care Act	2001	N/A	TAS I16P1, TAS I16P2, TAS I16P3, TAS I16D1, TAS Schedule 1	TAS Schedule 1	TAS Schedule 1
Condensation in Buildings Tasmanian Designers Guide	—	N/A	TAS F8P1	TAS H4D9	N/A
Dairy Industry Act	1994	N/A	TAS I4P1, TAS I4D1, TAS I7D1	N/A	N/A
Disability (Access to Premises – Buildings) Standards	2010	N/A	TAS D4D14	N/A	N/A
Disability Discrimination Act (Cth)	1992	N/A	TAS D1P10	N/A	N/A
Early Childhood Centre and School Age Care Facilities Code	N/A	N/A	TAS I5D2	N/A	N/A
Education and Care Services National Law (Application) Act	2011	N/A	TAS I16P1, TAS I16P2, TAS I16P3,TAS I16D1, TAS Schedule 1	TAS Schedule 1	N/A
Export Control (Milk and Diary) Orders	N/A	N/A	TAS I4D17	N/A	N/A
Health Service Establishments Act	2006	N/A	TAS I9D1	N/A	N/A
Hygienic Production of Pet Meat	N/A	Technical Report 88	TAS I6D2	N/A	N/A

No.	Date	Title	Volume One	Volume Two	Housing Provisions
Liquor Licensing Act	1990	N/A	TAS I4P1, TAS I4D1, TAS I5D1	N/A	N/A
Primary Produce Safety Act	2011	N/A	TAS I4P1, TAS I4D1, TAS I4D16	N/A	N/A
Water and Sewerage Industry Act	2008	N/A	TAS I4D3	N/A	N/A

Table Notes

(1) All legislation referenced in this Schedule is Tasmanian State Legislation unless noted otherwise.

(2) All referenced documents including legislation, codes, Australian Standards, guidelines and codes of practice are the version at the time of the project documentation approval, unless noted otherwise.

TAS Footnote: Other legislation affecting buildings

In addition to any applicable provisions of the Building Act 2016 and other legislative and regulatory instruments under that Act, such as regulations, determinations, guidelines, codes and standards there are a number of other legislative technical requirements, and regulatory instruments affecting the design, construction and/or performance of buildings that practitioners may need to be aware of, including but not limited to, the following list. Additional legislative and regulatory instruments such as regulations, codes and standards may exist under the legislation and regulatory instruments listed.

1. Administering Agency

Department of Justice – Consumer, Building and Occupational Services

Relevant legislation

Director's determinations and guidelines

2. Work Places

Administering agency

WorkSafe Tasmania – Department of Justice

Relevant Tasmanian legislation and regulatory instruments

Work Health and Safety Act 2012

Code of Practice – Managing Risks of Hazardous Chemicals in the Workplace – WorkSafe Tasmania publication CP120

Code of Practice – Managing the Work Environment and Facilities – WorkSafe Tasmania publication CP124

Code of Practice – Safe Design of Structures – WorkSafe Tasmania publication CP128

Schedule 10 Victoria

Introduction

Section A **Governing requirements**

Part A2	Compliance with the NCC
A2G2	Performance Solution

Section B **Structure**

Part B1	Structural provisions
VIC B1D6	Construction of buildings in flood hazard areas

Section C **Fire resistance**

Part C2	Fire resistance and stability
C2D11	Fire hazard properties

Section D **Access and egress**

Part D2	Provision for escape
D2D5	Exit travel distances
VIC D2D9	Width of doorways in exits or paths of travel to exits
Part D3	Construction of exits
D3D26	Operation of latch

Section E **Services and equipment**

Part E1	Fire fighting equipment
VIC E1D7	Where sprinklers are required: Class 3 building
E1D13	Where sprinklers are required: occupancies of excessive hazard
Specification 17	Fire sprinkler systems
VIC S17C2	Application of automatic fire sprinkler standards
Specification 18	Class 2 and 3 buildings not more than 25 m in effective height
S18C3	System requirements
Specification 20	Smoke detection and alarm systems
S20C4	Smoke detection system
VIC S20C8	System monitoring

Section F **Health and amenity**

Part F4	Sanitary and other facilities
VIC F4P2	Laundry facilities
F4D1	Deemed-to-Satisfy Provisions
F4D4	Facilities in Class 3 to 9 buildings
F4D8	Construction of sanitary compartments
VIC F4D13	First aid rooms
Part F5	Room heights
VIC F5P1	Room or space heights
F5V1	Room or space heights
VIC F5D1	Deemed-to-Satisfy Provisions
VIC F5D3	Class 3, 9a and 9c residential aged care buildings – size of rooms

Section G **Ancillary provisions**

Part G1	Minor structures and components

	VIC G1P2	Swimming pool access and water recirculation systems
	VIC G1D2	Swimming pools
	Part G5	Construction in bushfire prone areas
	VIC G5O1	Objective
	VIC G5F1	Construction in bushfire prone areas
	VIC G5P1	Bushfire resistance
	VIC G5P2	Additional bushfire requirements for certain Class 9 buildings
	VIC G5D2	Application of Part
	VIC G5D4	Protection — certain Class 9 buildings
Section I	**Special use buildings**	
VIC Part I4	**Class 3 and 9a residential aged care buildings and Class 9c buildings**	
	Performance Requirements	
	VIC I4P1	Communication systems
	VIC I4P2	Electrical power outlets
	Deemed-to-Satisfy Provisions	
	VIC I4D1	Deemed-to-Satisfy Provisions
	VIC I4D2	Application of Part
	VIC I4D3	Doorway width
	VIC I4D4	Windows
	VIC I4D5	Grab rails
	VIC I4D6	Electronic communication system
	VIC I4D7	Electrical power outlets
VIC Part I5	**Places of public entertainment**	
	Performance Requirements	
	VIC I5P1	Temporary tiered seating, concourses and embankments
	VIC I5P2	Motor vehicle racing
	VIC I5P3	Sanitary and amenity facilities
	Deemed-to-Satisfy Provisions	
	VIC I5D1	Deemed-to-Satisfy Provisions
	VIC I5D2	Application of Part
	VIC I5D3	Temporary tiered seating, concourses and embankments
	VIC I5D4	Motor vehicle racing
	VIC I5D5	Sanitary and amenity facilities
VIC Part I6	**Class 9b children's services**	
	Performance Requirements	
	VIC I6P1	Doorways to a children's room
	Deemed-to-Satisfy Provisions	
	VIC I6D1	Deemed-to-Satisfy Provisions
	VIC I6D2	Application of Part
	VIC I6D3	Doorways to a children's room
Schedule 1	**Definitions**	
Schedule 2	**Referenced documents**	
Footnote: Other legislation affecting buildings		

VIC Introduction

This Appendix contains variations and additions to the Building Code of Australia (BCA) provisions which are considered necessary for the effective application of the Code in Victoria and shall be treated as amendments to the Code.

Section A Governing requirements

Part A2 Compliance with the NCC

A2G2 Performance Solution

[2019: A2.2]

Insert subclause VIC A2G2(5) in clause A2G2 as follows:

(5) A *Performance Solution* cannot be used to satisfy a relevant *Performance Requirement* for the installation of a *combustible cladding product* in an *external wall* of a—

(a) Class 2, 3 or 9 building with a *rise in storeys* of 2 that does not comply with C2D6; and

(b) Class 2, 3, 5, 6, 7, 8 or 9 building with a *rise in storeys* of 3 or more.

Section B Structure

Part B1 Structural provisions

Delete B1D6 and insert VIC B1D6 as follows:

VIC B1D6 Construction of buildings in flood hazard areas

[2019: VIC B1.6]

(1) A Class 2 or 3 building, Class 9a *health-care building*, Class 9c building or Class 4 part of a building, in a *flood hazard area* must comply with the ABCB Standard for Construction of Buildings in Flood Hazard Areas.

(2) The definitions of *flood hazard area* and *freeboard* in the ABCB Standard for Construction of Buildings in Flood Hazard Areas are replaced with those in VIC Schedule 1.

(3) The definition of *defined flood level* in the ABCB Standard for Construction of Buildings in Flood Hazard Areas is replaced with that in VIC Schedule 1.

Section C Fire resistance

Part C2 Fire resistance and stability

C2D11 Fire hazard properties

[2019: C1.10]

Delete C2D11(3) and insert VIC C2D11(3) as follows:

(3) The requirements of (1) do not apply to a material or assembly if it is—

(a) plaster, cement render, concrete, terrazzo, ceramic tile or the like; or

(b) a *fire-protective covering*; or

(c) a timber-framed *window*; or

(d) a solid timber handrail or skirting; or

(e) a timber-faced door; or

(f) an electrical switch, socket-outlet, cover plate or the like; or

(g) a material used for—

(i) a roof insulating material applied in continuous contact with a substrate; or

(ii) an adhesive; or

(iii) a *damp-proof course*, *flashing*, caulking, sealing, ground moisture barrier, or the like; or

(h) a paint, varnish, lacquer or similar finish, other than nitro-cellulose lacquer; or

(i) a clear or translucent roof light of glass fibre-reinforced polyester if—

(i) the roof in which it is installed forms part of a single *storey* building *required* to be Type C construction; and

(ii) the material is used as part of the roof covering; and

(iii) it is not closer than 1.5 m from another roof light of the same type; and

(iv) each roof light is not more than 14 m^2 in area; and

(v) the area of the roof lights per 70 m^2 of roof surface is not more than 14 m^2; or

(j) a face plate or neck adaptor of supply and return air outlets of an air handling system; or

(k) a face plate or diffuser plate of light fitting and emergency *exit* signs and associated electrical wiring and electrical components; or

(l) a joinery unit, cupboard, shelving, or the like; or

(m) an attached non-building fixture and fitting such as—

(i) a curtain, blind, or similar decor, other than a proscenium curtain *required* by Specification 32; and

(ii) a whiteboard, *window* treatment or the like; or

(n) timber treads, risers, landings and associated supporting framework installed in accordance with D3D30 where the *Spread-of-Flame Index* and the *Smoke-Developed Index* of the timber does not exceed 9 and 8 respectively.

Section D Access and egress

Part D2 Provision for escape

D2D5 Exit travel distances

[2019: D1.4]

Delete D2D5(4) and insert VIC D2D5(4) as follows:

(4) Class 9 buildings — in a *patient care area* in a Class 9a building and in a *children's service*—

(a) no point on the floor must be more than 12 m from a point from which travel in different directions to 2 of the *required exits* is available; and

(b) the maximum distance to one of those *exits* must not be more than 30 m from the starting point.

Delete D2D9 and insert VIC D2D9 as follows:

VIC D2D9 Width of doorways in exits or paths of travel to exits

[2019: VIC D1.6(f)(iv)]

In a *required exit* or path of travel to an *exit*, the unobstructed width of a doorway must be not less than—

(a) in *patient care areas* through which patients would normally be transported in beds—

(i) if the doorway provides access to, or from, a corridor of width—

(A) less than 2.2 m — 1200 mm; or

(B) 2.2 m or greater — 1070 mm; and

(ii) where the doorway referred to in (i) is fitted with two leaves and one leaf is secured in the closed position in accordance with D3D26(3)(e), the other leaf must permit an unobstructed opening not less than 800 mm wide; or

(b) in *patient care areas* in a *horizontal exit* — 1250 mm; or

(c) the unobstructed width of each *exit* provided to comply with D2D8(1), (2), (3) or (4), minus 250 mm; or

(d) in any other case except where it opens to a *sanitary compartment* or bathroom — 750 mm wide.

Part D3 Construction of exits

D3D26 Operation of latch

[2019: D2.21]

Insert subclause VIC D3D26(6) in clause D3D26 as follows:

(6) For the purposes of (1), an exit door from a *children's service* which does not open to an outdoor space enclosed in accordance with G1D4, must have the device located between 1.5 m and 1.65 m above the floor and the door must be *self-closing*.

Section E Services and equipment

Part E1 Fire fighting equipment

Delete E1D7 and insert VIC E1D7 as follows:

VIC E1D7 Where sprinklers are required: Class 3 building

[2019: VIC Table E1.5]

Sprinklers are *required* throughout—

(a) a Class 3 building used as a *residential care building*; and

(b) any *fire compartment* containing a Class 3 part used for residential care; and

(c) any *shared accommodation building*.

E1D13 Where sprinklers are required: occupancies of excessive hazard

[2019: Table E1.5 (Note 4)]

Delete E1D13(2) and insert VIC E1D13(2) as follows:

(2) For the purposes of (1), occupancies of excessive *fire hazard* comprise buildings which contain—

(a) hazardous process risks including the following:

(i) Aircraft hangars.

(ii) Electrical/electronic manufacturing and assembly (predominantly plastic components).

(iii) Fire-lighter manufacturing.

(iv) Fireworks manufacturing.

(v) Flammable liquid spraying.

(vi) Foam plastic goods manufacturing and/or processing.

(vii) Foam rubber goods manufacturing and/or processing.

(viii) Hydrocarbon based sheet product manufacturing and/or processing.

(ix) Nitrocellulose and nitrocellulose goods manufacturing.

(x) Paint and varnish works, solvent based.

(xi) Plastic goods manufacturing and/or processing works.

(xii) Resin and turpentine manufacturing.

(xiii) Vehicle repair shops.

(b) combustible goods with an aggregate volume exceeding 2000 m^3 and stored to a height greater than 4 m such as the following:

(i) Aerosol packs with flammable contents.

(ii) Cartons and associated packing material excluding cartons with densely packed non-combustible content.

(iii) Electrical appliances where the components are predominantly plastic.

(iv) Foamed rubber or plastics including wrappings or preformed containers.

(v) Paper products.

(vi) Plastic, rubber, vinyl and other sheets in the form of offcuts, random pieces or rolls.

(vii) Textiles raw and finished.

(viii) Timber products.

Specification 17 Fire sprinkler systems

Delete S17C2 and insert VIC S17C2 as follows:

VIC S17C2 Application of automatic fire sprinkler standards

[2019: VIC Spec E1.5: 2]

Subject to this Specification, an *automatic* fire sprinkler system must comply with—

(a) for a Class 5, 6, 7, 8 or 9b building: AS 2118.1; or

(b) for a Class 2, 3, 4 9a or 9c building: AS 2118.1, except clause 5.9.10 of AS 2118.1 does not apply and is replaced with 'Covered balconies shall be sprinkler protected'; or

(c) for a Class 2 or 3 building with an *effective height* of not more than 25 m and a *rise in storeys* of 4 or more; Specification 18 and the relevant provisions of this Specification as applicable; or

(d) for Class 4, 5, 6, 7, 8, 9a (other than a *residential care building (Vic)*) or 9b parts of a building less than 25 m in *effective height*, which also contains Class 2 or 3 parts: a sprinkler system in accordance with Specification 18 as for a Class 2 or 3 building and the relevant provisions of this Specification except—

(i) a FPAA101D sprinkler system cannot be used where the Class 4, 5, 6, 7, 8, 9a (other than a *residential care building (Vic)*) or 9b parts—

(A) contain more than 2 *storeys*; or

(B) are more than 25% of the total *floor area* of the building; or

(C) are located above the fourth *storey*; and

(ii) a FPAA101D or FPAA101H sprinkler system cannot be used where the Class 7a part (other than an *open-deck carpark*) accommodates more than 40 vehicles; or

(e) for a Class 2 or 3 building with a *rise in storeys* of not more than 3: AS 2118.4 as applicable; or

(f) for a combined sprinkler and hydrant system: AS 2118.6; or

(g) for a Class 9a *health-care building* used as a *residential care buildiing (Vic)*: AS 2118.4 as applicable; or

(h) for a Class 9c building: AS 2118.4 as applicable.

Specification 18 Class 2 and 3 buildings not more than 25 m in effective height

S18C3 System requirements

[2019: Spec E1.5a: 2]

Delete S18C3(1) and insert VIC S18C3(1) as follows:

(1) A *required automatic* fire sprinkler system installed in a Class 2 or 3 building with an *effective height* of not more than 25 m and a *rise in storeys* of 4 or more must comply with—

(a) AS 2118.1 except clause 5.9.10 of AS 2118.1 does not apply and is replaced with 'Covered balconies shall be sprinkler protected'; or

(b) AS 2118.4, as applicable; or

(c) FPAA101D—

(i) except for *residential care building (Vic)*; and

(ii) except that clause 2.2.1 of FPAA101D applies as if the first paragraph is replaced with 'Covered balconies shall be sprinkler protected'; or

(d) FPAA101H—

(i) except for *residential care building (Vic)*; and

(ii) except that clause 3.5.2.8 of FPAA101H applies as if the first paragraph is replaced with 'Covered balconies shall be sprinkler protected'; and

(iii) except that clause 3.5.3 of FPAA101H applies as if it is replaced with:

(A) The location and spacing of sprinklers in Class 5, 6, 7, 8 and 9b parts of the building shall be in accordance with Section 5 of AS 2118.1:2017.

(B) The location and spacing of sprinklers in Class 9a and 9c parts of the building shall be in accordance with Section 5 of AS 2118.1:2017 except that clause 5.9.10 of AS 2118.1 does not apply and is replaced with 'Covered balconies shall be sprinkler protected'.

Specification 20 Smoke detection and alarm systems

S20C4 Smoke detection system

[2019: Spec E2.2a: 4]

Delete S20C4(4) and insert VIC S20C4(4) as follows:

(4) In a Class 9c building provided with a smoke detection system—

(a) if the building accommodates more than 20 residents, manual call points must be installed in paths of travel so that no point on a floor is more than 30 m from a manual call point; and

(b) indication of the zone where the smoke detection system has actuated must be achieved by one of the following:

(i) Option 1—

(A) remote automatic indication of each zone must be given in each smoke compartment; and

(B) indication of (A) must be indicated on remote annunciator panels with alpha-numeric displays with a minimum of 20 characters of 9 mm minimum height.

(ii) Option 2—

(A) indication of the zone where the smoke detection system has actuated must be communicated via a suitable interface with the fire indicator panel to a portable remote communication device; and

(B) at least one such portable remote communication device per smoke compartment must be provided to staff nominated by the owner or operator and properly instructed as to the duties and responsibilities involved; and

(C) the portable remote communication device may be a pager with alpha-numeric display or portable telephone handset with capability of receiving alpha-numeric display.

Delete S20C8 and insert VIC S20C8 as follows:

VIC S20C8 System monitoring

[2019: VIC Spec E2.2a: 8]

The following installations must be connected to a fire alarm monitoring system connected to a fire station or a fire station dispatch centre in accordance with AS 1670.3:

(a) A smoke detection system in a Class 3 building provided in accordance with S20C2(b)(i) or (ii).

(b) A smoke detection system in a Class 9a *health-care building*, if the building accommodates more than 20 patients, unless the building is sprinklered and the sprinkler system is permanently connected to a fire station, or other approved monitoring service with a direct data link to a fire station, in accordance with Building Practice Note FS-01.

(c) Smoke detection in accordance with S20C6 provided to activate—

(i) a smoke exhaust system in accordance with Specification 21; or

(ii) *smoke-and-heat vents* in accordance with Specification 22.

(d) An *automatic* fire detection and alarm system *required* by E2D10 for large isolated buildings subject to C3D4.

Section F Health and amenity

Part F4 Sanitary and other facilities

Delete F4P2 and insert VIC F4P2 as follows:

VIC F4P2 Laundry facilities

[2019: VIC FP2.2 Application]

Laundering facilities or space for laundering facilities and the means for the sanitary disposal of waste water must be provided in a convenient location within or associated with a building appropriate to the function or use of the building.

Applications

F4P2 only applies to—

(a) a Class 2 building or Class 4 part of a building; and

(b) a Class 9a *health-care building*; and

(c) a Class 9c building; and

(d) an early childhood centre other than a *restricted children's service*.

F4D1 Deemed-to-Satisfy Provisions

[2019: F2.0]

Delete F4D1(1) and insert VIC F4D1(1) as follows:

(1) Where a *Deemed-to-Satisfy Solution* is proposed, *Performance Requirements* F4P1 to F4P6 are satisfied by complying with—

(a) F4D2 to F4D12 and VIC F4D13; and

(b) for public transport buildings, Part I2; and

(c) for *farm sheds*, Part I3.

F4D4 Facilities in Class 3 to 9 buildings

[2019: F2.3]

Delete F4D4(9) and insert VIC F4D4(9) as follows:

(9) A Class 9b early childhood centre, other than a *children's service*, must be provided with—

(a) a kitchen or food preparation area with a kitchen sink, separate hand washing facilities, space for a refrigerator and space for cooking facilities, with—

(i) the facilities protected by a door or gate with child proof latches to prevent unsupervised access to the facilities by children younger than 5 years old; and

(ii) the ability to facilitate supervision of children from the facilities if the early childhood centre accommodates children younger than 2 years old; and

(b) one bath, shower or shower-bath; and

(c) if the centre accommodates children younger than 3 years old—

(i) a laundry facility comprising a washtub and space in the same room for a washing machine; and

(ii) a bench type baby bath, which is within 1 m of the nappy change bench; and

(iii) a nappy changing bench which—

(A) is within 1 m of separate adult hand washing facilities and bench type baby bath; and

(B) must be not less than 0.9 m^2 in area and at a height of not less than 850 mm, but not more than 900 mm above the finished floor level; and

(C) must have a space not less than 800 mm high, 500 mm wide and 800 mm deep for the storage of steps; and

(D) is positioned to permit a staff member changing a nappy to have visibility of the play area at all times.

Insert subclause VIC F4D4(12) in clause F4D4 as follows:

(12) A *children's service* must be provided with—

(a) a kitchen or facilities for the preparation and cooking of food for children including washing up facilities and a space for refrigerated food storage facilities; and

(b) except in a *restricted children's service*, if the service accommodates children younger than 3 years of age—

(i) a laundry facility comprising a washtub and space in the same room for a washing machine; and

(ii) a bench-type baby bath, with hot and cold water connected, and a nappy change bench in close proximity; and

(c) except in a *restricted children's service*, one bath or shower-bath.

Delete Table F4D4g and insert VIC Table F4D4g as follows:

VIC Table F4D4g: Sanitary facilities in Class 9b buildings – early childhood centres

User group	Facility type	Design occupancy	Number
Children	Closet pans	1 - 30	2
		>30	Add 1 per 15
	Washbasins	1 - 30	2
		>30	Add 1 per 15

Table Notes

Facilities for use by children must be—

(a) junior closet pans, except that those in a *restricted children's service* may be adult height toilets if they are fitted with a removable seat suitable for children and a wide and stable step in front; and

(b) washbasins with a rim height not exceeding 600 mm, except that those in a *restricted children's service* may be adult height washbasins if they are provided with a wide and stable step in front; and

(c) except in a *children's service*, accessible from both indoor and outdoor play areas; and

(d) in a *children's service*, other than a *restricted children's service*, the closet pans must be located in relation to children's rooms and outdoor play spaces so that children using toilets can be observed by staff from children's rooms and outdoor play space.

F4D8 Construction of sanitary compartments

[2019: F2.5]

Delete F4D8(3) and insert VIC F4D8(3) as follows:

(3) In an early childhood centre, other than a *restricted children's service*, closet pans situated in a group for use by children must be separated from one another by means of a partition, which, except for the doorway, is opaque for a height of not less than 900 mm but not more than 1200 mm above the floor.

Insert VIC F4D13 as follows:

VIC F4D13 First aid rooms

[2019: VIC F2.101]

(1) If an *assembly building*, place of public entertainment (as defined in the Building Act 1993) or an *open spectator stand* accommodates more than 5000 spectators at an arena, sportsground, showground, racecourse, cricket ground, football ground, coursing ground, motor racing arena, or the like, a suitable room or rooms must be provided in accordance with VIC Table F4D13 for use by para-medical attendants for first aid purposes.

(2) First aid rooms *required* by (1) must—

(a) be distributed as uniformly as possible throughout the *assembly building* or *open spectator stand*; and

(b) be convenient to a public road; and

(c) be readily accessible from within and outside the arena or ground; and

(d) have a *floor area* of not less than 24 m^2; and

(e) be provided with a suitable wash basin or sink.

Insert VIC Table F4D13 as follows:

VIC Table F4D13: First aid rooms

Spectator capacity	Number of first aid rooms
5,001 to 10,000	1
10,001 to 15,000	2
15,001 to 30,000	3
Each extra 15,000 or part thereof	1

Part F5 Room heights

Delete F5P1 and insert VIC F5P1 as follows:

VIC F5P1 Room or space heights

[2019: VIC FP3.1]

A *habitable room* or space must have sufficient size to enable the room or space to fulfil its intended function.

F5V1 Room or space heights

[2019: FV3.1]

Delete F5V1(1) and insert VIC F5V1(1) as follows:

(1) Compliance with VIC F5P1 is verified only in relation to the height of a *habitable room* or space where the height of *habitable room* or space provides an appropriate *activity support level* that does not unduly interfere with its intended function.

Delete F5D1 and insert VIC F5D1 as follows:

VIC F5D1 Deemed-to-Satisfy Provisions

[2019: VIC F3.0]

Where a *Deemed-to-Satisfy Solution* is proposed, *Performance Requirement* VIC F5P1 is satisfied by complying with F5D2 and VIC F5D3.

Insert VIC F5D3 as follows:

VIC F5D3 Class 3, 9a and 9c residential aged care buildings – size of rooms

[2019: VIC F3.103]

In a *residential aged care building* or *residential care building*—

(a) each bedroom must have a *floor area* of not less than 12 m^2 per occupant; and

(b) all other common *habitable rooms* (other than kitchens) must have a *floor area* of not less than 7.5 m^2 with—

(i) in a Class 3 hostel or supported residential services building or Class 9c building an aggregate *floor area* of not less than 3.5 m^2 per occupant; or

(ii) in a Class 9a nursing home an aggregate *floor area* of not less than 2.5 m^2 per occupant.

Section G Ancillary provisions

Part G1 Minor structures and components

Delete G1P2 and insert VIC G1P2 as follows:

VIC G1P2 Swimming pool access and water recirculation systems

[2019: VIC GP1.2]

(1) A barrier must be provided to a *swimming pool* and must—

(a) be continuous for the full extent of the hazard; and

(b) be of a strength and rigidity to withstand the foreseeable impact of people; and

(c) restrict the access of young children to the pool and the immediate pool surrounds; and

(d) have any gates and doors fitted with latching devices not readily operated by young children, and constructed to automatically close and latch.

(2) A *swimming pool* water recirculation system must incorporate safety measures to avoid entrapment of, or injury to, a person.

Applications

(1) VIC G1P2(1) only applies to a *swimming pool* with a depth of water more than 300 mm associated with—

(a) a Class 2 or 3 building or Class 4 part of a building; or

(b) a *children's service*.

(2) VIC G1P2(2) only applies to a *swimming pool* with a depth of water more than 300 mm.

Delete G1D2 and insert VIC G1D2 as follows:

VIC G1D2 Swimming pools

[2019: VIC G1.1]

(1) A *swimming pool* associated with a *children's service*, with a depth of water more than 300 mm, must have fencing or other barriers in accordance with AS 1926.1 and AS 1926.2.

(2) A *swimming pool* with a depth of water more than 300 mm and which is associated with a Class 2 or 3 building or Class 4 part of a building, must have suitable barriers to restrict access by young children to the immediate pool surrounds in accordance with AS 1926.1 and AS 1926.2.

(3) A water recirculation system in a *swimming pool* with a depth of water more than 300 mm must comply with AS 1926.3.

Part G5 Construction in bushfire prone areas

Delete G5O1 and insert VIC G5O1 as follows:

VIC G5O1 Objective

[2019: GO5]

The Objective of this Part is to—

(a) safeguard occupants from injury from the effects of a bushfire; and

(b) protect buildings from the effects of a bushfire; and

(c) facilitate temporary shelter for building occupants who may be unable to readily evacuate the building prior to a bushfire.

Applications

(1) VIC G5O1(a) and (b) apply in a *designated bushfire prone area* to—

(a) a Class 2 or 3 building; or

(b) a Class 10a building or deck associated with a Class 2 or 3 building.

(2) VIC G5O1(a), (b) and (c) apply in a *designated bushfire prone area* to—

(a) a Class 9a *health-care building*; and

(b) a Class 9b—

(i) *early childhood centre*; and

(ii) primary or secondary *school*; and

(c) a Class 9c *residential care building*; and

(d) a Class 10a building or deck immediately adjacent or connected to a building of a type listed in (2)(a) to (c); and

(e) a Class 4 part of a building associated with a building of a type listed in (2)(a) to (c).

Delete G5F1 and insert VIC G5F1 as follows:

VIC G5F1 Construction in bushfire prone areas

[2019: GF5.1]

A building constructed in a *designated bushfire prone area*—

(a) is to provide a resistance to bushfires in order to reduce the danger to life and minimise the risk of the loss of the building; and

(b) if occupied by people who may be unable to readily evacuate the building prior to a bushfire, is to be constructed so as to provide its occupants shelter from the direct and indirect actions of a bushfire.

Applications

(1) VIC G5F1(a) apply in a *designated bushfire prone area* to—

(a) a Class 2 or 3 building; or

(b) a Class 10a building or deck associated with a Class 2 or 3 building; or

(c) a Class 10a building or deck immediately adjacent or connected to a building of a type listed in (2)(a), (b) or (c).

(2) VIC G5F1(a) and (b) apply in a *designated bushfire prone area* to—

(a) a Class 9a *health-care building*; and

(b) a Class 9b—

(i) *early childhood centre*; and

(ii) primary or secondary *school*; and

(c) a Class 9c *residential care building*; and

(d) a Class 4 part of a building associated with a building of a type listed in (a) to (c).

Delete G5P1 and insert VIC G5P1 as follows:

VIC G5P1 Bushfire resistance

[2019: GP5.1]

A building that is constructed in a *designated bushfire prone area* must be designed and constructed to—

(a) reduce the risk of ignition from a *design bushfire* with an annual exceedance probability not more than 1:100 years, or 1:200 years for a Class 9 building; and

(b) take account of the assessed duration and intensity of the *fire actions* of the *design bushfire*; and

(c) be designed to prevent internal ignition of the building and its contents; and

(d) maintain the structural integrity of the building for the duration of the *design bushfire*.

Applications

VIC G5P1 applies in a *designated bushfire prone area* to—

(a) a Class 2 or 3 building; and

(b) a Class 9a *health-care building*; and

(c) a Class 9b—

(i) *early childhood centre*; and

(ii) primary or secondary *school*; and

(d) a Class 9c *residential care building*; and

(e) a Class 10a building or deck immediately adjacent or connected to a building of a type listed in (a) to (d); and

(f) a Class 4 part of a building associated with a building of a type listed in (b) to (d).

Delete G5P2 and insert VIC G5P2 as follows:

VIC G5P2 Additional bushfire requirements for certain Class 9 buildings

[New for 2022]

A building that is constructed in a *designated bushfire prone area* and occupied by people who may be unable to readily evacuate the building prior to a bushfire must, to the degree necessary—

(a) reduce the risk of an untenable indoor environment for occupants during a bushfire event, appropriate to the—

(i) location of the building relative to fire hazards, including—

(A) classified vegetation; and

(B) adjacent buildings, structures and movable objects; and

(C) carparking areas and allotment boundaries; and

(D) other *combustible* materials; and

(ii) number of occupants to be accommodated within the building; and

(iii) intensity of bushfire attack on the building; and

(iv) duration of occupancy; and

(v) intensity of potential consequential fires; and

(vi) occupant tenability within the building before, during and after the bushfire event; and

(vii) combined effects of structural, fire exposure and other effects to which the building may reasonably be subjected; and

(viii) provision of fire fighting equipment and water supply to facilitate protection of the building; and

(b) be provided with vehicular access to the *site* to enable firefighting and emergency personnel to defend or evacuate the building; and

(c) have access to a sufficient supply of water for firefighting purposes on the *site*; and

(d) provide safe access within the *site* to the building (including carparking areas), as well as safe egress after the bushfire event.

Applications

VIC G5P2 applies to the following buildings located in a *designated bushfire prone area*—

(a) a Class 9a *health-care building*; and

(b) a Class 9b—

(i) *early childhood centre*; and

(ii) primary or secondary *school*; and

(c) a Class 9c *residential care building*; and

(d) a Class 4 part of a building associated with a building of a type listed in (a) to (c).

Notes

VIC G5P2 does not guarantee the safety of building occupants or the maintenance of tenable conditions within a building during a bushfire event.

Delete G5D2 and insert VIC G5D2 as follows:

VIC G5D2 Application of Part

[2019: G5.1]

The *Deemed-to-Satisfy Provisions* of this Part apply in a *designated bushfire prone area* to—

(a) a Class 2 or 3 building; or

(b) a building located in an area subject to a Bushfire Attack Level (BAL) not exceeding BAL—12.5, determined in accordance with AS 3959 that is—

(i) a Class 9a *health-care building*; or

(ii) a Class 9b—

(A) an *early childhood centre*; or

(B) a primary or secondary *school*; or

(iii) a Class 9c *residential care building*; or

(c) a Class 10a building or deck immediately adjacent or connected to a—

(i) Class 2 or 3 building; or

(ii) a building of a type listed in (b); or

(d) a Class 4 part of a building associated with a building of a type listed in (b).

Notes

(1) If a building of a type listed in (b), (c)(ii) or (d) is subject to a BAL exceeding BAL—12.5, the building would need to comply with *Performance Requirement* VIC G5P2 by means of a *Performance Solution*.

(2) There are no *Deemed-to-Satisfy Provisions* for these buildings.

Delete G5D4 and insert VIC G5D4 as follows:

VIC G5D4 Protection — certain Class 9 buildings

[New for 2022]

(1) In a *designated bushfire prone area* the following must comply with Specification 43:

(a) A Class 9a *health-care building*.

(b) A Class 9b—

(i) *early childhood centre*; or

(ii) primary or secondary *school*.

(c) A Class 9c *residential care building*.

(d) A Class 4 part of a building associated with a building of a type listed in (a) to (c).

(2) In a *designated bushfire prone area*, a Class 10a building or deck immediately adjacent or connected to a building of a type listed in (1)(a) to (c) must comply with S43C2 and S43C13.

Section I Special use buildings

VIC Part I4 Class 3 and 9a residential aged care buildings and Class 9c buildings

Introduction to this Part

VIC Part I4 — Class 3 and 9a *residential aged care buildings* and Class 9c buildings contains additional *Deemed-to-Satisfy Provisions* for Sections D and F for Class 3 and Class 9a *residential aged care buildings* and Class 9c buildings as well as additional *Performance Requirements* and associated *Deemed-to-Satisfy Provisions*.

Performance Requirements

VIC I4P1 Communication systems

[2019: VIC HP101.2]

An electronic communication system must be provided to enable residents and staff to summon assistance in *habitable rooms* (other than kitchens), water closets, shower rooms and bathrooms.

Applications

VIC I4P1 only applies to Class 3 and Class 9a *residential aged care buildings* and Class 9c buildings.

VIC I4P2 Electrical power outlets

[2019: VIC HP101.3]

Sufficient general purpose outlets must be provided for electrical appliances in bedrooms in locations that obviate the need for extension leads.

Applications

VIC I4P2 only applies to Class 3 and Class 9a *residential aged care buildings* and Class 9c buildings.

Deemed-to-Satisfy Provisions

VIC I4D1 Deemed-to-Satisfy Provisions

[2019: VIC H101.0]

Performance Requirements VIC I4P1 to VIC I4P3 and relevant *Performance Requirements* in Sections D and F are satisfied by complying with VIC I4D2 to VIC I4D7.

VIC I4D2 Application of Part

[2019: VIC H101.1]

The *Deemed-to-Satisfy Provisions* of this Part apply to Class 3 and Class 9a *residential aged care buildings* and Class 9c buildings.

VIC I4D3 Doorway width

[2019: VIC H101.2]

(1) The clear width of all bedroom entrance doorways must be not less than 900 mm.

(2) The clear width of all other doorways must be not less than 800 mm.

VIC I4D4 Windows

[2019: VIC H101.3]

(1) The sill height of *windows* in *habitable rooms* (except kitchens) must be not more than 900 mm above the floor.

(2) Openable *windows* must be provided with flyscreens.

VIC I4D5 Grab rails

[2019: VIC H101.4]

Grab rails must be provided in association with every closet pan, shower or bath in accordance with AS 1428.1.

VIC I4D6 Electronic communication system

[2019: VIC H101.6]

A communication system must—

(a) contain a back-up power supply; and

(b) have a control that enables the call to be cancelled manually at the point of origin only; and

(c) incorporate a device at the point of origin that indicates the system has operated; and

(d) incorporate an indication panel in the manager's office or staff area that clearly indicates the point of origin of a call; and

(e) have an audible tone that has a continuous signal until deactivated at the point of origin; and

(f) be operational at all times; and

(g) have two call points in each ensuite or combined shower/water closet with one call point located in the shower recess and the other on the wall beside the closet pan ahead of the bowl rim; and

(h) have call points (other than those mentioned in (g)) which are located—

(i) within the reach of a resident whilst in bed; and

(ii) in all common *habitable rooms*; and

(iii) in all bathrooms, *sanitary compartments* and shower rooms where the call point must be of waterproof construction and within the reach of any fallen resident.

VIC I4D7 Electrical power outlets

[2019: VIC H101.7]

General purpose outlets must be provided as follows:

(a) In bedrooms with one occupant — two general purpose outlets provided on a minimum of two walls.

(b) For each additional occupant — two general purpose outlets provided at the head of each additional bed.

VIC Part I5 Places of public entertainment

Introduction to this Part

VIC Part I5 — Places of public entertainment contains additional *Deemed-to-Satisfy Provisions* and *Performance Requirements* for Sections B, D and F for places of public entertainment.

Performance Requirements

VIC I5P1 Temporary tiered seating, concourses and embankments

[2019: VIC HP102.1]

Temporary tiered seating stands and embankments must be designed using engineering principles and constructed to provide for the safety of patrons and orderly means of evacuation in an emergency.

Applications

VIC I5P1 applies to all places or public entertainment as defined in the Building Act 1993 and prescribed in regulation 206 of the Building Regulations 2018.

VIC I5P2 Motor vehicle racing

[2019: VIC HP102.2]

Every place of public entertainment where motor vehicle racing takes place must be provided with suitable barriers and guard rails to protect the public from injury.

Applications

VIC I5P2 applies to all places of public entertainment as defined in the Building Act 1993 and prescribed in regulation 206 of the Building Regulations 2018.

VIC I5P3 Sanitary and amenity facilities

[2019: VIC HP102.3]

Sufficient sanitary and amenity facilities must be provided at places of public entertainment for use by patrons.

Applications

VIC I5P3 applies to all places of public entertainment as defined in the Building Act 1993 and prescribed in regulation 206 of the Building Regulations 2018.

Deemed-to-Satisfy Provisions

VIC I5D1 Deemed-to-Satisfy Provisions

[2019: VIC H102.0]

Performance Requirements VIC I5P1 to VIC I5P3 are satisfied by complying with VIC I5D2 to VIC I5D5.

VIC I5D2 Application of Part

[2019: VIC H102.1]

The *Deemed-to-Satisfy Provisions* of this Part apply to all places of public entertainment.

VIC I5D3 Temporary tiered seating, concourses and embankments

[2019: VIC H102.2]

Temporary tiered seating, concourse and embankments must be designed and constructed as follows:

(a) Temporary tiered seating, concourse and embankments must comply with the *Deemed-to-Satisfy Provisions* of Section B, Section D and I1D4(a)(ii), (iii) and (b).

(b) The maximum slope of tiered seating must not exceed 34 degrees measured from the horizontal plane.

(c) Aisles must be evenly spaced throughout the structure and have—

(i) a minimum width of 1 m; and

(ii) the aggregate of aisle widths leading to an *exit* must be not less than the *required* width of that *exit*; and

(iii) no one aisle may serve more than—

(A) 120 patrons where individual seating with backs is provided; or

(B) 200 patrons in any other case.

(d) When applying the balustrading requirements of the *Deemed-to-Satisfy Provisions* of Section D, the height of plat balustrading that directly abuts seating (i.e. with no aisle between the seat and the balustrading) must be measured from the plat or seat base whichever in the higher.

(e) Transverse aisles must be provided at a horizontal distance of not more than 10 m between any row of seats.

(f) All individual moveable seats must be—

(i) fixed in groups of not less than four; and

(ii) not used in stepped or ramped seating areas.

(g) For any spectators' embankment—

(i) where the rear slope exceeds 1 in 5, a guard rail must be installed with no openings except at the heads of steps or ramps; and

(ii) where the forward or front slope exceeds 1 in 8, the embankment must be stepped with plats not less than 500 mm wide and risers not greater than 230 mm high.

(h) Guard rails must be installed to protect any fence, balustrade or railing associated with stepped or ramped standing spaces where excess pressure is expected from spectators.

VIC I5D4 Motor vehicle racing

[2019: VIC H102.3]

Motor vehicle racing barriers and guard rails must be provided so as to comply with the following:

(a) Motorsport Australia Track Operators Guide for Motorsport Race Venues.

(b) For stock car racing—

(i) on the outer margin of the track: a continuous concrete, close boarding or long guard barrier having a minimum height of not less than 900 mm; and

(ii) on all curved sections of the track within 3 m of a barrier described in (i): a stout welded or woven wire mesh fence adequately supported having a height of not less than 1.8 m above adjacent spectators viewing areas; and

(iii) between the public viewing area and the fence described in (ii): a suitable crowd barrier that will prevent spectators entering within 1.2 m of that fence.

VIC I5D5 Sanitary and amenity facilities

[2019: VIC H102.4]

Sanitary and amenity facilities in places of public entertainment must be provided as follows:

(a) In places other than buildings:

(i) One closet fixture for every 200 female patrons or part thereof.

(ii) One closet fixture or urinal for every 200 male patrons of part thereof, at least 30% of which must be in the form of closet fixtures.

(iii) One washbasin for every 200 patrons or part thereof.

(iv) For use by disabled persons, one unisex facility within the meaning of Part F4 of NCC Volume One for every 100 closet fixtures or part thereof *required* under (i) and (ii).

(v) One drinking fountain or drinking tap for every washbasin *required* under (iii).

(vi) First aid facilities in accordance with VIC F4D13.

(b) In buildings, as *required* to comply with Part F4.

VIC Part I6 Class 9b children's services

Introduction to this Part

VIC Part I6 — Class 9b Children's services contains an additional *Performance Requirement* and *Deemed-to-Satisfy Provisions* for Section D for Class 9b *children's services*.

Performance Requirements

VIC I6P1 Doorways to a children's room

[2019: VIC HP104.1]

The number and location of doorways to a children's room must take into account the mobility of children in the event that emergency egress or entry is required.

Applications

VIC I6P1 only applies to Class 9b *children's services*.

Deemed-to-Satisfy Provisions

VIC I6D1 Deemed-to-Satisfy Provisions

[2019: VIC H104.0]

Performance Requirement VIC I6P1 and relevant *Performance Requirements* in Section D are satisfied by complying with VIC I6D2 and VIC I6D3.

VIC I6D2 Application of Part

[2019: VIC H104.1]

The *Deemed-to-Satisfy Provisions* of this Part apply to Class 9b *children's services*.

VIC I6D3 Doorways to a children's room

[2019: VIC H104.2]

A children's room must have a doorway, or in the case of every such room accommodating more than 21 children at least two doorways as widely separated as possible, providing direct access to or from—

(a) an outdoor play area; or

(b) a passage leading to the outside; or

(c) a fire-isolated *exit*.

Schedule 1 Definitions

Children's service: Has the same meaning as it has under the Children's Services Act 1996, but excludes a service where education and care is primarily provided to school aged children.

Combustible cladding product: Means—

(a) aluminium composite panels (ACPs) with a core of less than 93 per cent inert mineral filler (inert content) by mass in external cladding as part of a wall system; and

(b) expanded polystyrene (EPS) products used in an external insulation and finish (rendered) wall system.

Early childhood centre

Includes—

(a) any premises, or part thereof, providing or intending to provide a centre-based education and care service within the meaning of the Education and Care Services National Law Act 2010, and the Education and Care Services National Regulations, excluding a service where education and care is primarily provided to school aged children; and

(b) a *children's service*.

Flashing

A strip or sleeve of impervious material dressed, fitted or built-in to provide a barrier to water movement, or to divert the travel of water, or to cover a joint where water would otherwise penetrate to the interior of a building, and includes the following:

(a) Perimeter flashing: a flashing used at the floor-wall junction.

(b) Vertical flashing: a flashing used at wall junctions within *shower areas*.

(c) Roof flashing: a rigid or flexible material, usually metal, fixed over, against or built into an abutment to form a weathertight joint.

Flood hazard area

The *site* (whether or not mapped) encompassing land in an area liable to flooding within the meaning of Regulation 153 of the Building Regulations 2018.

Freeboard

The minimum height of the lowest floor of the building above the *defined flood level*, regulated by the relevant planning scheme, or specified or otherwise determined by the relevant council under Regulation 153 of the Building Regulations 2018 (see Figure 3).

Hotel offering shared accommodation: A hotel which has any *sole-occupancy units* that can be shared by unrelated persons.

On-site wastewater management system

A system that receives and/or treats wastewater generated and discharges the resulting effluent to—

(a) an *approved disposal system*; or

(b) re-use system; or

(c) land application system.

Plumbing

Any water service plumbing, roof plumbing, sanitary plumbing system or heating, ventilation and air-conditioning plumbing.

Residential care building (Vic): A building which is a place of residence where 10% or more of persons who reside there need physical assistance in conducting their daily activities and to evacuate the building during an emergency (including any residential care service, State funded residential care service or supported residential service as defined in the Supported Residential Services (Private Proprietors) Act 2010 and an *aged care building*) but does not include—

(a) a hospital; or

(b) a dwelling in which 2 or more members of the same family and not more than 2 other persons would ordinarily be resident; or

(c) a place of residence where only one resident needs physical assistance in conducting their daily activities and

to evacuate the building during an emergency.

Restricted children's service: A *children's service* that is—

(a) any one of the following as defined in the Children's Services Regulations 2020—

(i) a limited hours Type 1 service; or

(ii) a limited hours Type 2 service; or

(iii) a short term Type 1 service; or

(iv) a short term Type 2 service; or

(b) an associated children's service within the meaning of the Children's Services Act 1996 approved to be operated by an approved provider at the same place as an approved education and care service that is required to meet the conditions of a limited hours Type 1 service, a limited hours Type 2 service, a short term Type 1 service, or a short term Type 2 service.

Shared accommodation building: A Class 3 building that is a boarding-house, chalet, guest house, lodging-house, backpacker accommodation or the like, or a residential part of a *hotel offering shared accommodation* (but is not a *residential care building (Vic)*, a motel or a residential part of *school*, *health-care building* or detention centre) having—

(a) more than one *sole-occupancy unit* of which any *sole-occupancy unit* has sleeping facilities capable of accommodating 3 or more unrelated persons; or

(b) sleeping facilities capable of accommodating 13 or more unrelated persons.

Schedule 2 Referenced documents

Insert VIC Table 1 as follows:

VIC Table 1: Schedule of referenced documents

No.	Date	Title	Volume One	Volume Two	Housing Provisions	Volume Three
AS/NZS ISO 817	2016	Refrigerants - Designation and safety classification	N/A	N/A	N/A	VIC E2D2
AS/NZS 1200	2015	Pressure Equipment	N/A	N/A	N/A	VIC E2D2
AS 1271	2003	Safety valves, other valves, liquid level gauges and other fittings for boilers and unfired pressure vessels	N/A	N/A	N/A	VIC E2D2
AS 1324.1	2001	Air filters for use in general ventilation and air conditioning	N/A	N/A	N/A	VIC E2D2
AS 1345	1995	Identification of the contents of pipes, conduits and ducts	N/A	N/A	N/A	VIC E2D2
AS 1358	2004	Bursting discs and bursting disc devices - Application, selection and installation	N/A	N/A	N/A	VIC E2D2
AS 1428.1	2009	Design for access and mobility, Part 1: General requirements for access – New building work (incorporating amendments 1 and 2)	VIC I4D5	N/A	N/A	N/A
AS/NZS 1571	2020	Copper - seamless tubes for air conditioning and refrigeration	N/A	N/A	N/A	VIC E2D2
AS/NZS 1530.3	1999	Methods for fire tests on building materials, components and structures	N/A	N/A	N/A	VIC B4D2
AS/NZS 1668.1	2015	The use of ventilation and air conditioning in buildings: Fire and smoke control in buildings	N/A	N/A	N/A	VIC E2D2

No.	Date	Title	Volume One	Volume Two	Housing Provisions	Volume Three
AS 1668.2	2012	The use of ventilation and air conditioning in buildings: Mechanical ventilation in buildings	N/A	N/A	N/A	VIC E2D2
AS 1851	2012	Routine service of fire protection systems and equipment	N/A	N/A	N/A	VIC B4D2
AS 1926.1	2012	Swimming pool safety, Part 1: Safety barriers for swimming pools	VIC G1D2	N/A	N/A	N/A
AS 1926.2	2007	Swimming pool safety, Part 2: Location of safety barriers for swimming pools (incorporating amendments 1 and 2)	VIC G1D2	N/A	N/A	N/A
AS 2118.1	2017	Automatic fire sprinkler systems, Part 1: General systems (incorporating amendment 1)	VIC S17C2, VIC S18C3	N/A	N/A	VIC B1D5, VIC B4D2
AS 2118.2	2021	Automatic fire sprinkler systems: Wall wetting sprinkler systems	N/A	N/A	N/A	VIC B4D2
AS 2118.3	2010	Automatic fire sprinkler systems: Deluge systems	N/A	N/A	N/A	VIC B4D2
AS 2118.4	2012	Automatic fire sprinkler systems, Part 4: Sprinkler protection for accommodation buildings not exceeding four storeys in height	VIC S17C2, VIC S18C3	N/A	N/A	VIC B1D5, VIC B4D2
AS 2118.5	2008	Automatic fire sprinkler systems	N/A	N/A	N/A	VIC B1D5, VIC B4D2
AS 2118.6	2012	Automatic fire sprinkler systems, Part 6: Combined sprinkler and hydrant systems in multistorey buildings	VIC S17C2	N/A	N/A	N/A
AS2118.8	1997	Automatic fire sprinkler systems: Minor modifications	N/A	N/A	N/A	VIC B4D2

No.	Date	Title	Volume One	Volume Two	Housing Provisions	Volume Three
AS 2118.10	1995	Automatic fire sprinkler systems: Approval documentation	N/A	N/A	N/A	VIC B4D2
AS 2473.3	2007	Valves for compressed gas cylinders	N/A	N/A	N/A	VIC E2D2
AS 2568	2019	Purity of medical air produced from on-site compressor systems	N/A	N/A	N/A	VIC E2D2
AS 2896	2021	Medical gas systems - Installation and testing of non-flammable medical gas pipeline systems	N/A	N/A	N/A	VIC E2D2
AS 2902	2005	Medical gas systems - Low pressure flexible hose assemblies	N/A	N/A	N/A	VIC E2D2
AS/NZS 2918	2018	Domestic solid fuel burning appliances - Installation	N/A	N/A	N/A	VIC E2D2
AS 2941	2013	Fixed fire protection installations - Pumpset systems	N/A	N/A	N/A	VIC B4D2
AS/NZS 3500.1	2021	Plumbing and drainage: Water services	N/A	N/A	N/A	VIC B1D3, VIC B1D5, VIC B3D3, VIC B4D2, VIC B6D2, VIC B7D3, VIC B7D4, VIC E2D2
AS/NZS 3500.2	2021	Plumbing and drainage: Sanitary plumbing and drainage	N/A	N/A	N/A	VIC C1D3, VIC C2D4, VIC C4P1, VIC E2D2
AS/NZS 3500.3	2021	Plumbing and drainage: Stormwater drainage	N/A	N/A	N/A	VIC C5D2, VIC C6D2
AS/NZS 3500.4	2021	Plumbing and drainage: Heated water services	N/A	N/A	N/A	VIC E2D2, VIC B2D6
AS/NZS 3666.1	2011	Air handling and water systems of buildings - Microbial control: Design, installation and commissioning	N/A	N/A	N/A	VIC E2D2

No.	Date	Title	Volume One	Volume Two	Housing Provisions	Volume Three
AS/NZS 3666.2	2011	Air handling and water systems of buildings - Microbial control: Operation and maintenance	N/A	N/A	N/A	VIC E2D2
AS 4032.3	2022	Water supply - Valves for the control of heated water supply temperatures	N/A	N/A	N/A	VIC B2D6
AS 4041	2006	Pressure piping	N/A	N/A	N/A	VIC E2D2
AS 4118.1.1	1996	Fire sprinkler systems: Components - Sprinklers and sprayers	N/A	N/A	N/A	VIC B4D2
AS 4118.1.2	1996	Fire sprinkler systems: Components - Alarm valves (wet)	N/A	N/A	N/A	VIC B4D2
AS 4118.1.3	1995	Fire sprinkler systems: Components - Water motor alarms	N/A	N/A	N/A	VIC B4D2
AS 4118.1.4	1994	Fire sprinkler systems: Components - Valve monitors	N/A	N/A	N/A	VIC B4D2
AS 4118.1.5	1996	Fire sprinkler systems: Components - Deluge and pre-action valves	N/A	N/A	N/A	VIC B4D2
AS 4118.1.6	1995	Fire sprinkler systems: Components - Stop valves and non-return valves	N/A	N/A	N/A	VIC B4D2
AS 4118.1.7	1996	Fire sprinkler systems: Components - Alarm valves (dry)	N/A	N/A	N/A	VIC B4D2
AS 4118.1.8	1999	Fire sprinkler systems: Components - Pressure reducing valves	N/A	N/A	N/A	VIC B4D2
AS 4254.1	2021	Ductwork for air-handling systems in buildings: Flexible duct	N/A	N/A	N/A	VIC E2D2
AS 4254.2	2012	Ductwork for air-handling systems in buildings: Rigid duct	N/A	N/A	N/A	VIC E2D2

No.	Date	Title	Volume One	Volume Two	Housing Provisions	Volume Three
AS 4426	1997	Thermal insulation of pipework, ductwork and equipment - Selection, installation and finish	N/A	N/A	N/A	VIC E2D2
AS 4508	1999	Thermal resistance of insulation for ductwork used in building air-conditioning	N/A	N/A	N/A	VIC E2D2
AS/NZS 4859.1	2018	Thermal insulation materials for buildings: General criteria and technical provisions	N/A	N/A	N/A	VIC E2D2
AS/NZS 5141	2018	Residential heating and cooling systems - Minimum applications and requirements for energy efficiency, performance and comfort criteria	N/A	N/A	N/A	VIC E2D2
AS/NZS 5149.1	2016	Refrigerating systems and heat pumps - Safety and environmental requirements: Definitions, classification and selection criteria	N/A	N/A	N/A	VIC E2D2
AS/NZS 5149.2	2016	Refrigerating systems and heat pumps - Safety and environmental requirements: Design, construction, testing, marking and documentation	N/A	N/A	N/A	VIC E2D2
AS/NZS 5149.3	2016	Refrigerating systems and heat pumps - Safety and environmental requirements: Installation site	N/A	N/A	N/A	VIC E2D2
AS/NZS 5149.4	2016	Refrigerating systems and heat pumps - Safety and environmental requirements: Operation, maintenance, repair and recovery	N/A	N/A	N/A	VIC E2D2
AS/NZS 5601.1	2022	Gas installations: General installations	N/A	N/A	N/A	VIC E2D2

No.	Date	Title	Volume One	Volume Two	Housing Provisions	Volume Three
ABCB Standard for Construction of Buildings in Flood Hazard Areas, Version 2012.3	2012	Standard for Construction of Buildings in Flood Hazard Areas	VIC B1D6	N/A	N/A	
—	2022	Motorsport Australia Track Operators Guide For Motorsport Race Venues – version 1	VIC I5D4	N/A	N/A	
FPAA101D	2018	Automatic Fire Sprinkler System Design and Installation— Drinking Water Supply	VIC S17C2, VIC S18C3	N/A	N/A	B1D5
FPAA101H	2018	Automatic Sprinkler System Design— Hydrant Water Supply	VIC S17C2, VIC S18C3	N/A	N/A	B4D3
Building Practice Note FS-01	—	Victorian Building Authority Practice Note FS-01	VIC S20C8	N/A	N/A	
SA HB 39	2015	Metal roof and wall cladding installation	N/A	N/A	N/A	VIC E3D2
HB 276	2004	A guide to good practice for energy efficient installation of residential heating, cooling and air conditioning plant and equipment	N/A	N/A	N/A	VIC E2D2
N/A	2007	Australian and New Zealand refrigerant handling code of practice 2007 Part 1 - Self-contained low charge systems	N/A	N/A	N/A	VIC E2D2
N/A	2007	Australian and New Zealand refrigerant handling code of practice 2007 Part 2 - Systems other than Self-contained low charge systems	N/A	N/A	N/A	VIC E2D2
N/A	1993	The Building Act 1993 (Victoria)	N/A	N/A	N/A	B6D2
N/A	2018	Plumbing Regulations	N/A	VIC H6V1	N/A	B2P7

VIC Footnote: Other legislation affecting buildings

In addition to any applicable provisions of the Building Act 1993, Building Regulations 2018 and this Code, there are a number of other legislative technical requirements affecting the design, construction and/or performance of buildings that practitioners may need to be aware of, including, but not necessarily limited to, the following list. Additional legislative instruments such as regulations, codes and standards may exist under the legislation listed.

1. Abattoirs and Knackeries

Administering Agency

Department of Environment and Primary Industries

Relevant Legislation

Meat Industry Act 1993

2. Accommodation – Residential (Boarding Houses, Guest Houses, Hostels, Motels)

Administering Agency

Department of Health and Human Services

Consumer Affairs Victoria

Municipal council

Relevant Legislation

Public Health and Wellbeing Act 2008

Public Health and Wellbeing Regulations 2019

Residential Tenancies Act 1997

Residential Tenancies Regulations 2021

Residential Tenancies (Rooming House Standards) Regulations 2012

3. Accommodation - Supported Residential Services

Administering Agency

Department of Health and Human Services

Relevant Legislation

Supported Residential Services (Private Proprietors) Act 2010

Supported Residential Services (Private Proprietors) Regulations 2012

4. Alpine Resorts

Administering Agency

Department of Environment, Land, Water and Planning

Alpine Resorts Management Boards

Relevant Legislation

Alpine Resorts (Management) Act 1997

5. Asbestos Removal

Administering Agency

Victorian WorkCover Authority

Environment Protection Authority

Relevant Legislation

Occupational Health and Safety Act 2004

Environment Protection Act 2017

6. Children's Services

Administering Agency

Department of Education and Training

Relevant Legislation

Children's Services Act 1996

Children's Services Regulations 2009

Education and Care Services National Law Act 2010

Education and Care Services National Regulations

7. Crematoria, Mausolea, Vaults, etc.

Administering Agency

Department of Health and Human Services, Cemeteries and Crematoria Regulation Unit

Cemetery Trusts

Relevant Legislation

Cemeteries and Crematoria Act 2003

Cemeteries and Crematoria Regulations 2015

8. Crown Land

Administering Agency

Department of Environment, Land, Water and Planning

Crown Land committees of management

Relevant Legislation

Crown Land (Reserves) Act 1978

9. Dairies

Administering Agency

Dairy Food Safety Victoria

Relevant Legislation

Dairy Act 2000

10. Dangerous Goods

Administering Agency

Victorian WorkCover Authority

Relevant Legislation

Dangerous Goods Act 1985

Dangerous Goods (Explosives) Regulations 2011

Dangerous Goods (HCDG) Regulations 2016

Dangerous Goods (Storage and Handling) Regulations 2012

Codes of practice published by the Victorian WorkCover Authority

11. Electrical Installations

Administering Agency

Energy Safe Victoria

Electrical transmission and distribution companies

Relevant Legislation

Electricity Industry Act 2000

Electricity Industry (Residual Provisions) Act 1993

Electricity Safety Act 1998

State Electricity Commission Act 1958

Electricity Safety (General) Regulations 2019

Standards Australia Wiring Rules, AS/NZS 3000/3013

12. Fences - dividing

Administering Agency

Department of Justice and Regulation

Dispute Settlement Centre of Victoria

Relevant Legislation

Fences Act 1968

13. Fire Prevention in Existing Buildings

Administering Agency

Municipal council

Relevant Legislation

Building Act 1993

Building Regulations 2018

14. Food Premises

Administering Agency

Department of Health and Human Services

Municipal council

Relevant Legislation

Food Act 1984

15. Gas Installations

Administering Agency

Energy Safe Victoria

Relevant Legislation

Gas Industry Act 2001

Gas Safety Act 1997

Gas Safety (Gas Installation) Regulations 2018

AS/NZS 5601 Gas Installations

16. Historic Buildings

Administering Agency

Department of Environment, Land, Water and Planning

Executive Director under the Heritage Act 2017

Relevant Legislation

Heritage Act 2017

17. Hospitals, Nursing Homes and Health Care Buildings

Administering Agency

Department of Health and Human Services

Relevant Legislation

Public Health and Wellbeing Act 2008

18. Lift Installations

Administering Agency

Victorian WorkCover Authority

Relevant Legislation

Occupational Health and Safety Act 2004

Occupational Health and Safety Regulations 2017

AS1735 Lifts, escalators and moving walks

19. Moveable Dwellings (in Caravan Parks)

Administering Agency

Department of Environment, Land, Water and Planning

Municipal council

Relevant Legislation

Residential Tenancies Act 1997

Residential Tenancies (Caravan Parks and Moveable Dwellings Registration and Standards) Regulations 2020

20. Occupational Health and Safety

Administering Agency

Victorian WorkCover Authority

Relevant Legislation

Occupational Health and Safety Act 2004

Occupational Health and Safety Regulations 2017

Codes of practice published by the Victorian WorkCover Authority

21. Pharmacies

Administering Agency

Department of Health and Human Services

Victorian Pharmacy Authority

Relevant Legislation

Pharmacy Regulation Act 2010

Victorian Pharmacy Authority Guidelines

22. Planning Controls

Administering Agency

Department of Environment, Land, Water and Planning

Municipal council

Relevant Legislation

Planning and Environment Act 1987

Planning schemes

23. Prisons and Jails

Administering Agency

Department of Justice and Regulation

Corrections Victoria

Relevant Legislation

Corrections Act 1986

24. Radiation Safety

Administering Agency

Department of Health and Human Services

Relevant Legislation

Radiation Act 2005

Radiation Regulations 2017

25. Schools (Non-Government)

Administering Agency

Department of Education and Training

Victorian Registration and Qualifications Authority

Relevant Legislation

Education and Training Reform Act 2006

26. Sanitary Plumbing, Water Supply and Sewerage

Administering Agency

Victorian Building Authority

Relevant Legislation

Building Act 1993

Plumbing Regulations 2018

National Construction Code Volume Three Plumbing Code of Australia

AS/NZS 3500 Plumbing and Drainage

27. Septic Tank Installations

Administering Agency

Environment Protection Authority

Municipal council

Relevant Legislation

Environment Protection Act 2017

Guidelines For Environmental Management: Code of Practice - Onsite wastewater management

28. Smoking Restrictions

Administering Agency

Department of Health and Human Services

Municipal council

Relevant Legislation

Tobacco Act 1987

29. Subdivision of Buildings

Administering Agency

Department of Environment, Land, Water and Planning

Municipal council

Relevant Legislation

Subdivision Act 1988

Schedule 11 Western Australia

Introduction

Section B **Structure**

Part B1	Structural provisions
WA B1D3	Determination of individual actions
WA B1D4	Determination of structural resistance of materials and forms of construction
Specification 4	Design of buildings in cyclonic areas
S4C1	Scope

WA Part B2 **Changes to AS/NZS 1170.2:2021**

Deemed-to-Satisfy Provisions

WA B2D1	Regional wind speeds
WA B2D2	Internal pressure
WA B2D3	Openings

Section I **Special use buildings**

WA Part I4 **Public buildings**

Deemed-to-Satisfy Provisions

WA I4D1	Deemed-to-Satisfy Provisions
WA I4D2	Application of Part
WA I4D3	Additional exits
WA I4D4	Goings and risers
WA I4D5	Handrails to ramps, flights and landings
WA I4D6	Artificial lighting
WA I4D7	Fixed seating

Schedule 1 **Definitions**

Schedule 2 **Referenced documents**

Footnote: Other legislation affecting buildings

WA Introduction

This Appendix contains variations and additions to the Building Code of Australia (BCA) provisions which are considered necessary for the effective application of the Code in Western Australia.

In Western Australia state variations apply to wind Regions B and D.

There are also additional provisions to consolidate building related requirements from the Health (Public Building) Regulations 1992 into the Western Australian Schedule of the BCA.

Section B Structure

Part B1 Structural provisions

Delete B1D3 and insert WA B1D3 as follows:

WA B1D3 Determination of individual actions

[2019: B1.2]

The magnitude of individual actions must be determined in accordance with the following:

(a) Permanent actions:

(i) the design or known dimensions of the building or structure; and

(ii) the unit weight of the construction; and

(iii) AS/NZS 1170.1; and

(iv) for a Class 7b building, a notional additional permanent roof load of not less than 0.15 kPa to support the addition of solar photovoltaic panels.

(b) Imposed actions:

(i) the known loads that will be imposed during the occupation or use of the building or structure; and

(ii) *construction activity actions*; and

(iii) AS/NZS 1170.1.

(c) Wind, snow and ice and earthquake actions:

(i) the applicable annual probability of design event for safety, determined by—

(A) assigning the building or structure an Importance Level in accordance with Table B1D3a; and

(B) determining the corresponding annual probability of exceedance in accordance with WA Table B1D3b; and

(ii) AS/NZS 1170.2, except where varied by WA Part B2; and

(iii) AS/NZS 1170.3 as appropriate; and

(iv) AS 1170.4; and

(v) in cyclonic areas, metal roof cladding, its connections and immediate supporting members must comply with Specification 4; and

(vi) for the purposes of (v), cyclonic areas are those determined as being located in wind regions B2, C and D in accordance with AS/NZS 1170.2, except where varied by WA Part B2.

(d) Actions not covered in (a), (b) and (c) above:

(i) the nature of the action; and

(ii) the nature of the building or structure; and

(iii) the Importance Level of the building or structure determined in accordance with Table B1D3a; and

(iv) AS/NZS 1170.1.

(e) For the purposes of (d) the actions include but are not limited to—

(i) liquid pressure action; and

(ii) ground water action; and

(iii) rainwater action (including ponding action); and

(iv) earth pressure action; and

(v) differential movement; and

(vi) time dependent effects (including creep and shrinkage); and

(vii) thermal effects; and

(viii) ground movement caused by—

(A) swelling, shrinkage or freezing of the subsoil; and

(B) landslip or subsidence; and

(C) *siteworks* associated with the building or structure; and

(ix) *construction activity actions*.

Insert Table B1D3a as follows:

Table B1D3a: Importance Levels of buildings and structures

Importance level	Building Types
1	Buildings or structures presenting a low degree of hazard to life and *other property* in the case of failure.
2	Buildings or structures not included in Importance Level 1, 3 and 4.
3	Buildings or structures that are designed to contain a large number of people.
4	Buildings or structures that are essential to post-disaster recovery or associated with hazardous facilities.

Insert WA Table B1D3b as follows:

WA Table B1D3b: Design events for safety

Importance Level	Annual probability of exceedance for non-cyclonic wind	Annual probability of exceedance for cyclonic wind other than Wind Region D north of the Tropic of Capricorn	Annual probability of exceedance for cyclonic wind in Wind Region D north of the Tropic of Capricorn	Annual probability of exceedance for snow	Annual probability of exceedance for earthquake
1	1:100	1:200	1:250	1:100	1:250
2	1:500	1:500	1:1000	1:150	1:500
3	1:1000	1:1000	1:2000	1:200	1:1000
4	1:2000	1:2000	1:5000	1:250	1:1500

Notes

B1D3(a)(iv) does not take effect until 1 October 2023.

Exemptions

B1D3(a)(iv) does not apply to a Class 7b building—

(a) where 100% of the roof area is shaded for more than 70% of daylight hours; or

(b) with a roof area of not more than 55m^2; or

(c) where more than 50% of the roof area is used as a terrace, *carpark*, roof garden, roof light or the like.

Explanatory Information

In Western Australia state variations apply to wind regions B and D, this includes wind region B2 as referenced in AS/NZS 1170.2.

The state variation for wind region B or B2 will ensure that designers consider the combination of peak external pressures and increased internal pressures in design of buildings and use a cyclonic (C) classification instead of non-cyclonic (N) classification. The definition of *design wind speed* is varied in WA Schedule 1 to identify that wind region B is a C classification in Western Australia. Other changes have also been made to reflect this.

In addition to a variation to clauses B1D3 and B1D4, a variation is made to the application of AS/NZS 1170.2 when used as either a primary referenced document or a secondary or subsequent referenced document. Refer to WA Schedule 2 and WA Part B2.

The state variation for wind region D applies only to those parts of region D located north of the Tropic of Capricorn. The 2021 edition of AS/NZS 1170.2 includes a reduction in design wind speeds for wind region D. The variation will retain similar design wind speeds for wind region D as the 2011 edition of AS/NZS 1170.2 previously referenced in the National Construction Code.

Delete B1D4 and insert WA B1D4 as follows:

WA B1D4 Determination of structural resistance of materials and forms of construction

[2019: B1.4]

The structural resistance of materials and forms of construction must be determined in accordance with the following, as appropriate:

(a) Masonry (including masonry-veneer, unreinforced masonry and reinforced masonry): AS 3700, except—

(i) '(for piers—isolated or engaged)' is removed from Clause 8.5.1(d); and

(ii) where Clause 8.5.1 requires design as for unreinforced masonry in accordance with Section 7, the member must also be designed as unreinforced masonry in accordance with Tables 10.3 and 4.1(a)(i)(C) of AS 3700.

(b) Concrete:

(i) Concrete construction (including reinforced and prestressed concrete): AS 3600.

(ii) Autoclaved aerated concrete: AS 5146.1.

(iii) Post-installed and cast-in fastenings: AS 5216.

(c) Steel construction:

(i) Steel structures: AS 4100.

(ii) Cold-formed steel structures: AS/NZS 4600.

(iii) Residential and low-rise steel framing: NASH Standard – Residential and Low-Rise Steel Framing Part 1 or Part 2.

(d) Composite steel and concrete: AS/NZS 2327.

(e) Aluminium construction: AS/NZS 1664.1 or AS/NZS 1664.2.

(f) Timber construction:

(i) Design of timber structures: AS 1720.1.

(ii) Timber structures: AS 1684.2, AS 1684.3 or AS 1684.4.

(iii) Nailplated timber roof trusses: AS 1720.5.

(g) Piling: AS 2159.

(h) Glazed assemblies:

(i) The following glazed assemblies in an *external wall* must comply with AS 2047:

(A) Windows excluding those listed in (ii).

(B) Sliding and swinging glazed doors with a frame, including french and bi-fold doors with a frame.

(C) Adjustable louvres.

(D) Shopfronts.

(E) Window walls with one piece framing.

(ii) All glazed assemblies not covered by (i) and the following glazed assemblies must comply with AS 1288:

(A) All glazed assemblies not in an *external wall*.

(B) Revolving doors.

(C) Fixed louvres.

(D) Skylights, roof lights and windows in other than the vertical plane.

(E) Sliding and swinging doors without a frame.

(F) Windows constructed on site and architectural one-off windows, which are not design tested in accordance with AS 2047.

(G) Second-hand windows, re-used windows and recycled windows.

(H) Heritage windows.

(I) Glazing used in balustrades and sloping overhead glazing.

(i) Termite Risk Management: Where a *primary building element* is subject to attack by subterranean termites: AS 3660.1, and—

(i) for the purposes of this provision, a *primary building element* consisting entirely of, or a combination of, any of the following materials is considered not subject to termite attack:

(A) Steel, aluminium or other metals.

(B) Concrete.

(C) Masonry.

(D) Fibre-reinforced cement.

(E) Timber — naturally termite resistant in accordance with Appendix C of AS 3660.1.

(F) Timber — preservative treated in accordance with Appendix D of AS 3660.1; and

(ii) a durable notice must be permanently fixed to the building in a prominent location, such as a meter box or the like, indicating—

(A) the termite management system used; and

(B) the date of installation of the system; and

(C) where a chemical is used, its life expectancy as listed on the *appropriate authority's* pesticides register label; and

(D) the installer's or manufacturer's recommendations for the scope and frequency of future inspections for termite activity.

(j) Roof construction (except in cyclonic areas):

(i) Terracotta, fibre-cement and timber slates and shingles: AS 4597.

(ii) Roof tiling: AS 2050.

(iii) Cellulose cement corrugated sheets: AS/NZS 2908.1 with safety mesh installed in accordance with AS 1562.3 clause 2.4.3.2 except for sub-clause (c)(vii) for plastic sheeting.

(iv) Metal roofing: AS 1562.1.

(k) Particleboard structural flooring: AS 1860.2.

(l) Garage doors and other large access doors in openings not more than 3 m in height in *external walls* of buildings determined as being located in wind region B2, C or D in accordance with AS/NZS 1170.2: AS/NZS 4505.

(m) Lift *shafts* which are not *required* to have an FRL, must—

(i) except as required by (ii), be completely enclosed with non-perforated material between the bottom of the pit and the ceiling of the lift *shaft*, other than—

(A) at landing doors, emergency doors and pit access doors; and

(B) *low-rise, low-speed constant pressure lifts*; and

(C) *small-sized, low-speed automatic lifts*; and

(ii) in *atriums* and observation areas, be protected with non-perforated material not less than 2.5 m in height—

(A) above any places on which a person can stand, which are within 800 mm horizontal reach of any vertical moving lift component including ropes and counterweights; and

(B) at the lowest level of the *atrium* area that the lift serves, on all sides except the door opening, for not less than 2.5 m in height, by enclosure with non-perforated material; and

(iii) be of non-brittle material; and

(iv) where glazing is used—

(A) comply with Table B1D4; or

(B) not fail the deflection criteria *required* by S6C11(c)(iii).

Insert Table B1D4 as follows:

Table B1D4: Material and minimum thickness of glazing and polycarbonate sheet

Application	Lift *shaft* vision panels more than 65 000 mm^2, door panels, and lift *shafts*	Lift *shaft* vision panels less than or equal to 65 000 mm^2
Laminated glass	10 mm (0.76 mm interlayer)	6 mm (0.76 mm interlayer)
Toughened/ laminated glass	10 mm (0.76 mm interlayer)	6 mm (0.76 mm interlayer)
Annealed glass with security polyester film coating	10 mm	6 mm
Safety wire glass	Not applicable	Subject to fire test
Polycarbonate sheet	13 mm	6 mm

Specification 4 Design of buildings in cyclonic areas

S4C1 Scope

[2019: Spec B1.2: 1]

Delete S4C1(2) and insert WA S4C1(2) as follows:

(2) For the purposes of Specification 4, cyclonic areas are those determined as being located in wind Regions B2, C and D in accordance with AS/NZS 1170.2.

WA Part B2 Changes to AS/NZS 1170.2:2021

Introduction to this Part

This Part sets out the changes necessary to the application of AS/NZS 1170.2:2021 in Western Australia for wind Region B2.

Deemed-to-Satisfy Provisions

WA B2D1 Regional wind speeds

[New for 2022]

Delete Table 3.1(A) of AS/NZS 1170.2:2021 and replace with WA Table B2D1.

Insert WA Table B2D1 as follows:

WA Table B2D1: Table 3.1(A)—Regional wind speeds—Australia

Regional wind speed	Region				
	Non-cyclonic		Cyclonic		
	A (0-5)	B1	B2	C (maximum)	D (maximum)
V_1	30	26		23	23
V_5	32	28		33	35
V_{10}	34	33		39	43
V_{20}	37	38		45	51
V_{25}	37	39		47	53
V_{50}	39	44		52	60
V_{100}	41	48		56	66
V_{200}	43	52		61	72
V_{250}	43	53		62	74
V_{500}	45	57		66	80
V_{1000}	46	60		70	85
V_{2000}	48	63		73	90
V_{2500}	48	64		74	91
V_{5000}	50	67		78	95
V_{10000}	51	69		81	99
V_R ($R \geq 5$ years)	$67-41R^{-0.1}$	$106-92R^{-0.1}$		$122-104R^{-0.1}$	$156-142R^{-0.1}$

Table Notes

(1) The peak gust has an equivalent moving average time of approximately 0.2 s (Holmes and Ginger, 2012).

(2) Values for V_1 have not been calculated by the formular for V_R in the Australian regions.

(3) For ultimate or serviceability limit states, refer to the National Construction Code (Australia) or AS/NZS 1170.0 for information on values of importance level and annual probability of exceedance appropriate for the design of structures. For buildings in townships in cyclonic regions, users should consider overall risk to a community when selecting importance levels.

(4) For Regions C and D, only the maximum values for the region are tabulated. Lower values of V_R may apply in

those regions, depending on the distance of the site from the smooth coastline.

WA B2D2 Internal pressure

[New for 2022]

Delete 5.3.1 of AS/NZS 1170.2:2021 and replace with the following:

5.3.1 Internal pressure

5.3.1.1 General

Internal pressure is a function of the external pressures, and the leakage and openings in the external surfaces of the building or an isolated part of a larger building, and for some large buildings, the internal volume. The open area of a surface shall be calculated by adding areas of opening to areas of permeability or leakage on that surface of the building (e.g. vents and gaps in the building envelope).

The height at which the design wind speed is determined for calculation of internal pressures shall be the average roof height (h), as defined in Figure 2.1. However, for the cases of windward wall leakage or openings on a building greater than 25 m in height, the design wind speed at the height of the opening shall be used.

Pressure coefficients for internal pressure (Cp,i) shall be determined by either Clause 5.3.1.2 or 5.3.1.3.

NOTE 1 Damage inspections after wind storms, in Regions B2, C and D, have shown that large openings are very likely to occur accidentally due to failure of elements under direct wind pressure, or in the lower levels of a building envelope, by debris impact. Large openings can also occur in Regions A (0 to 5), B1 and NZ (1 to 4) under the same circumstances, although openings produced by debris impact are less likely.

NOTE 2 The equivalent free area of a ventilator (e.g. ridge or under-eave ventilators) can be determined from the product of discharge coefficient and throat area.

5.3.1.2 Internal pressure coefficients for all cases, except ultimate limit states for parts of buildings below 25 m in Regions B2, C and D

Clause 5.3.1.1 applies to buildings in all regions for serviceability limit states.

For ultimate limit states, it applies to all buildings in Regions A (0 to 5), B1 and NZ (1 to 4), and parts of buildings higher than 25 m above ground level in Regions B2, C and D.

Pressure coefficients for internal pressure (Cp,i) shall be determined from Tables 5.1(A) or 5.1(B). Table 5.1(A) shall be used for the design case where there are no potential openings in any surface with a combined area greater than 0.5 % of the total area of that surface, and the leakage in the walls lead to internal pressures. Table 5.1(B) shall be used for the design case where there are openings in any surface greater than 0.5 % of the total area of that surface, or they can be created accidentally.

5.3.1.3 Internal pressure coefficients for ultimate limit states for parts of buildings below 25 m in Regions B2, C and D

Pressure coefficients for internal pressure (Cp,i) for parts of a building in Regions B2, C and D below 25 m for ultimate limit states, shall be determined from Table 5.1(B) only.

The ratio of the sum of opening areas on one surface to total open area of other walls and roof surfaces as defined in Table 5.1(B) shall not be taken to be less than two unless —

(a) it can be demonstrated that an opening will not be created in the building envelope as a result of impact loading from the windborne debris defined in Clause 2.5.8; or

(b) a permanently-open roof ventilator, such as a ridge ventilator, has been installed with equivalent total area (see Clause 5.3.1.1 Note 2) of at least that of the largest areas of any potential accidental openings in the walls, considering the combined area of wall openings in each wall surface one at a time; or

(c) permanently-open, wall ventilators have been installed on at least two walls, with equivalent total area (see Clause 5.3.1.1 Note 2) of the ventilators on each wall at least that of the largest of any potential accidental openings in the walls, considering the combined area of wall openings in each wall surface one at a time.

NOTE 1 Low-rise buildings in Regions B2, C and D should be designed for the high internal pressures resulting from large openings, for ultimate limit states. Even in cases where the opening is small or there is no opening, Table 5.1(A) is not intended to be used for low-rise buildings in Regions B2, C and D for ultimate limit states.

NOTE 2 To date, the majority of windborne debris in Regions B2, C and D in Australia has not often impacted at heights on buildings above 25 m. This is not the case in other parts of the world and could change in the future with increasing numbers of high-rise buildings.

WA B2D3 Openings

[New for 2022]

Delete 5.3.2 of AS/NZS 1170.2:2021 and replace with the following:

5.3.2 Openings

5.3.2.1 General

Openings shall be determined according to either Clause 5.3.2.2 (Regions A (0 to 5), B1 and NZ (1 to 4), and Regions B2, C, D at heights of 25 m or above) or Clause 5.3.2.3 (Regions B2, C, D below 25 m).

Subject to Clauses 5.3.2.2 and 5.3.2.3, combinations of openings and open area shall be assumed to give internal pressures, which, together with external pressures, give the most adverse wind actions.

NOTE Potential openings include doors or windows that are left open or may fail, vents that are normally open and holes in cladding caused by impacts by windborne debris during a major wind event. Openings can be doors (including balcony doors) or windows that are left open, open under pressure, or open due to the failure of latches or hinges. When determining internal pressures, consideration should be given to scenarios in which large openings may develop. Openings may also be generated by debris impacts, particularly in Regions B2, C and D (see Clause 2.5.8).

5.3.2.2 Openings in buildings in Regions A (0 to 5), B1 and NZ (1 to 4), and parts of buildings at heights of 25 m or above in Regions B2, C and D

The full area of doors, including large access doors (e.g. roller doors), and windows that are normally closed, shall be regarded as openings, unless they are demonstrated to be capable of resisting the applied wind pressures.

NOTE 1 When assessing internal pressures, designers should consider the principles of robustness, i.e. to avoid situations where the failure of a single component such as a door or window could lead to consequent and disproportionate failure of other elements, or even complete failure of the structure.

NOTE 2 The structural assessment of doors that are assumed to remain closed and intact should include elements such as supports, frames, jambs, roller door guides, wind locks, latches and hinges, and fixings, where the resistance of doors relies on those. This assessment of roller doors and their supporting structural elements should also account for any structural resistance to any catenary actions developed by the door under wind load.

5.3.2.3 Openings in buildings for ultimate limit states for parts of buildings below 25 m in Regions B2, C and D

Doors (including large access doors) and windows that are normally closed, and cladding elements, shall be regarded as openings with an area equal to the greater of—

(a) the full area of the element, where it has not been demonstrated that it can resist the applied wind pressures; or

(b) the area of opening that results from debris impact, where the debris impact loading criteria are defined in Clause 2.5.8.

Section I Special use buildings

WA Part I4 Public buildings

Introduction to this Part

WA Part I4 contains *Deemed-to-Satisfy Solutions* for *WA public buildings* that are additional to those contained in Sections D, F and I.

Deemed-to-Satisfy Provisions

WA I4D1 Deemed-to-Satisfy Provisions

[2019: WA H101.0]

(1) Where a *Deemed-to-Satisfy Solution* is proposed, *Performance Requirements* D1P1, D1P2, D1P3, D1P4, D1P6 and F6P2 are satisfied by complying with—

(a) Part D2, Part D3 and F6D5; and

(b) for additional requirements for *WA public buildings*, WA Part I4.

(2) Where a *Performance Solution* is proposed, the relevant *Performance Requirements* must be determined in accordance with A2G2(3) and A2G4(3) as applicable.

WA I4D2 Application of Part

[2019: WA H101.1]

The *Deemed-to-Satisfy Provisions* of this Part apply to a *WA public building* or part of a building.

WA I4D3 Additional exits

[2019: WA H101.2]

In a *WA public buildings*, each *storey* that accommodates more than 50 persons must have more than one *exit* from that *storey*.

WA I4D4 Goings and risers

[2019: WA H101.3]

(1) Steps serving a *WA public building* must have *risers* not more than 180 mm and *goings* not less than 280 mm.

(2) The requirements of (1) do not apply to steps in a *fire-isolated stairway*.

WA I4D5 Handrails to ramps, flights and landings

[2019: WA H101.4]

(1) For a *WA public building*, handrails must be located along—

(a) both sides of a ramp or flight; and

(b) each side of a landing, except for that part of a side that is interrupted by a ramp or flight.

(2) The requirements of (1) do not apply to—

(a) handrails referred to in D3D23; or

(b) handrails located within a *fire-isolated stairway* or *fire-isolated ramp*.

WA I4D6 Artificial lighting

[2019: WA H101.5]

(1) Artificial lighting must be provided along the external path of travel (including steps, landings, ramps or paths) to a road or *open space* associated with each *exit* from a *WA public building*.

(2) The artificial lighting system *required* by (1) must—

(a) provide a minimum illuminance of 1 lux at ground level; and

(b) be connected to circuits separate from those supplying lighting for foyers, entry porches, emergency escape passages or areas provided entry or egress to the *WA public building*; and

(c) be connected over two circuits where two or more lights are required; and

(d) have switches that are not able to be operated by members of the public.

WA I4D7 Fixed seating

[2019: WA H101.6]

Where fixed seating in a Class 9b *WA public building* is arranged in more than one row—

(a) aisles must be provided on both sides of every row that contains more than 10 seats; and

(b) the number of seats in a row must not exceed 42.

Schedule 1 Definitions

Design wind speed

The design gust wind speed for the area where the building is located, calculated in accordance with AS/NZS 1170.2 or AS 4055 (see WA Table 4 for wind classes).

Insert WA Table 4 as follows:

WA Table 4: Wind classes

Non-cyclonic Region A	Cyclonic Region B, C and D
N1, N2, N3	C1
N4, N5, N6 (these wind classes are covered in the ABCB Housing Provisions Part 2.2)	C2, C3, C4 (these wind classes are covered in the ABCB Housing Provisions Part 2.2)

Table Notes

(1) Wind classification map identifying wind regions is contained in ABCB Housing Provisions Part 2.2 (see Figure 2.2.3).

(2) Information on wind classes for particular areas may be available from the appropriate authority.

(3) "N" = non-cyclonic winds and "C" = cyclonic winds.

Licensed premises: Includes—

(a) premises in respect of which a cabaret licence as defined by the Liquor Control Act 1988 has been granted under that Act; or

(b) premises in respect of which a tavern licence, a hotel restricted licence or any other kind of hotel licence as defined by the Liquor Control Act 1988 has been granted under that Act; or

(c) a cabaret, hotel or tavern—

(i) in respect of which a special facility licence as defined by the Liquor Control Act 1988 has been granted under that Act; and

(ii) in respect of which paragraph (a) or (b) does not apply.

Potable water: Water intended for human consumption supplied by a water services provider.

Public building: A Class 6 *licensed premises* or 9b building where persons may assemble for—

(a) civic, theatrical, social, political or religious purposes; or

(b) educational purposes; or

(c) entertainment, recreational or sporting purposes; or

(d) business purposes.

WELS: Has the meaning given in the Water Efficiency Labelling and Standards Act 2005 of the Commonwealth.

Schedule 2 Referenced documents

Insert WA Table 1 as follows:

WA Table 1: Schedule of referenced documents

No.	Date	Title	Volume One	Volume Two	Housing Provisions	Volume Three
AS/NZS 1170.2	2021	Structural design actions – Wind actions (See Note 1)	WA B1D3, WA B1D4, Spec 4, WA B2D1, WA B2D2, WA B2D3, F3V1, Schedule 1	H1D7, H2V1, Schedule 1	WA 2.2.3, WA 2.3.1, WA 2.3.2, WA 2.3.3, WA 2.3.4, Schedule 1	Schedule 1
AS/NZS 3500.4	2021	Plumbing and drainage – Heated water services, Amdt 1	N/A	WA H9D4	N/A	N/A
AS 4055	2021	Wind loads for housing (See Note 2)	Schedule 1	H1D6, H1D8, Schedule 1	WA 2.2.3, WA 2.3.1, WA 2.3.5, Schedule 1	Schedule 1

Table Notes

(1) For AS/NZS 1170 Part 2, incorporate the changes as set out in WA Part B2 of Volume One and WA Part 2.3 of the ABCB Housing Provisions.

(2) For AS 4055, incorporate the changes set out in WA Part 2.3 of the ABCB Housing Provisions.

WA Footnote: Other legislation affecting buildings

In addition to any applicable provisions of the Building Act 2011, Building Regulations 2012 and this Code, there are a number of other legislative technical requirements affecting the design, construction and/or performance of buildings that practitioners may need to be aware of, including, but not necessarily limited to, the following list. Additional legislative instruments such as regulations, codes and standards may exist under the legislation listed.

1. Building

Administering Agency

Department of Mines, Industry Regulation and Safety

Relevant Legislation

Building Services (Complaint Resolution and Administration) Act 2011

Building Services (Complaint Resolution and Administration) Regulations 2011

Building Services (Registration) Act 2011

Building Services (Registration) Regulations 2011

2. Caravan Parks and Camping Grounds

Administering Agency

Department of Local Government, Sport and Cultural Industries

Relevant Legislation

Caravan Park and Camping Grounds Act 1995

Caravan Park and Camping Grounds Regulations 1997

3. Child Care

Administering Agency

Department of Communities

Relevant Legislation

Child Care Services Act 2007

Child Care Services Regulations 2007

Child Care Services (Child Care) Regulations 2006

4. Fences

Administering Agency

Department of Mines, Industry Regulation and Safety

Relevant Legislation

Dividing Fences Act 1961

5. Health

Administering Agency

Department of Health

Relevant Legislation

Health (Miscellaneous Provision) Act 1911

Health Act (Laundries & Bathrooms) Regulations

Health Act (Swimming Pools) Regulations 1964

Health (Air Handling and Water Systems) Regulations 1994

Health (Asbestos) Regulations 1992

Health (Aquatic Facilities) Regulations 2007

Health (Construction Work) Regulations 1973

Construction Camp Regulations

Health (Public Buildings) Regulations 1992

Health (Treatment of Sewage and Disposal of Effluent and Liquid Waste) Regulations 1974

Health (Rottnest Island) By-laws 1989

Sewerage (Lighting, Ventilation and Construction) Regulations 1971

Health Local Laws where adopted by Local Government

6. Heritage

Administering Agency

Heritage Council of Western Australia

Relevant Legislation

Heritage of Western Australia Act 1990

Heritage of Western Australia Regulations 1991

7. Hospitals and Health Services

Administering Agency

Department of Health

Relevant Legislation

Private Hospitals and Health Services Act 1927

8. Housing

Administering Agency

Department of Communities

Relevant Legislation

Housing Act 1980

9. Land

Administering Agency

Western Australian Land Information Authority

Relevant Legislation

Strata Titles Act 1985

10. Occupational Health and Safety

Administering Agency

Department of Mines, Industry Regulation and Safety

Relevant Legislation

Occupational Safety and Health Act 1984

11. Planning Controls

Administering Agency

Department of Planning, Lands and Heritage

Relevant Legislation

Planning and Development Act 2005

Planning and Development (Consequential and Transitional Provisions) Act 2005

12. Public Works

Administering Agency

Department of Finance, Building Management and Works

Relevant Legislation

Public Works Act 1902

© Australian Building Codes Board 2022
The National Construction Code can be accessed
free online at ncc.abcb.gov.au by registration

abcb.gov.au