Australian Building Codes Board

Housing Provisions Standard

2022

Copyright and Licence Notice

© Commonwealth of Australia and the States and Territories of Australia 2022, published by the Australian Building Codes Board

The material in this publication is licensed under a Creative Commons Attribution 4.0 International licence, with the exception of:

- any third party material
- any trade marks, and
- any images or photographs.

More information on this CC BY 4.0 licence is set out at the Creative Commons Website.

Enquiries about this publication can be sent to:

Australian Building Codes Board

GPO Box 2013, Canberra ACT 2601

Phone: 1300 134 631

Email: ncc@abcb.gov.au

Web: abcb.gov.au

Attribution

Use of all or part of this publication must include the following attribution: The National Construction Code 2022 was provided by the Australian Building Codes Board under the CC BY 4.0 licence.

Disclaimer

By accessing or using this publication, you agree to the following:

While care has been taken in the preparation of this publication, it may not be complete or up-to-date. You can ensure that you are using a complete and up-to-date version by checking the Australian Building Codes Board website (abcb.gov.au).

The Australian Building Codes Board, the Commonwealth of Australia and States and Territories of Australia do not accept any liability, including liability for negligence, for any loss (howsoever caused), damage, injury, expense or cost incurred by any person as a result of accessing, using or relying upon this publication, to the maximum extent permitted by law. No representation or warranty is made or given as to the currency, accuracy, reliability, merchantability, fitness for any purpose or completeness of this publication or any information which may appear on any linked websites, or in other linked information sources, and all such representations and warranties are excluded to the extent permitted by law.

This publication is not legal or professional advice. Persons rely upon this publication entirely at their own risk and must take responsibility for assessing the relevance and accuracy of the information in relation to their particular circumstances.

General table of contents

Front matter

Copyright and Licence Notice....2
How to use the Housing Provisions....7
List of amendments - ABCB Housing Provisions....10

2 Structure

Part 2.1 Scope and application of Section 2....21
Part 2.2 Structural provisions....22

3 Site preparation

Part 3.1 Scope and application of Section 3....28
Part 3.2 Earthworks....29
Part 3.3 Drainage....32
Part 3.4 Termite risk management....38

4 Footings and slabs

Part 4.1 Scope and application of Section 4....43
Part 4.2 Footings, slabs and associated elements....46

5 Masonry

Part 5.1 Scope and application of Section 5....75
Part 5.2 Masonry veneer....76
Part 5.3 Cavity masonry....78
Part 5.4 Unreinforced single leaf masonry....81
Part 5.5 Isolated piers....87
Part 5.6 Masonry components and accessories....90
Part 5.7 Weatherproofing of masonry....103

6 Framing

Part 6.1 Scope and application of Section 6....108
Part 6.2 Subfloor ventilation....109
Part 6.3 Structural steel members....113

7 Roof and wall cladding

Part 7.1 Scope and application of Section 7....146
Part 7.2 Sheet roofing....147
Part 7.3 Roof tiles and shingles....157
Part 7.4 Gutters and downpipes....166
Part 7.5 Timber and composite wall cladding....176

8 Glazing

Part 8.1 Scope and application of Section 8 188
Part 8.2 Windows and external glazed doors....189
Part 8.3 Glass 191
Part 8.4 Glazing human impact....194

9 Fire safety
Part 9.1 Scope and application of Section 9 201
Part 9.2 Fire separation of external walls....202
Part 9.3 Fire protection of separating walls and floors 229
Part 9.4 Fire protection of garage top dwellings 234
Part 9.5 Smoke alarms and evacuation lighting 236

10 Health and amenity
Part 10.1 Scope and application of Section 10 242
Part 10.2 Wet area waterproofing 243
Part 10.3 Room heights....263
Part 10.4 Facilities....265
Part 10.5 Light 267
Part 10.6 Ventilation 271
Part 10.7 Sound insulation 274
Part 10.8 Condensation management 285

11 Safe movement and access
Part 11.1 Scope and application of Section 11....289
Part 11.2 Stairway and ramp construction 290
Part 11.3 Barriers and handrails 299

12 Ancillary provisions
Part 12.1 Scope and application of Section 12....313
Part 12.2 Construction in alpine areas 314
Part 12.3 Attachment of framed decks and balconies to external walls of buildings using a waling plate 317
Part 12.4 Heating appliances, fireplaces, chimneys and flues 322

13 Energy efficiency
Part 13.1 Scope and application of Section 13....330
Part 13.2 Building fabric 331
Part 13.3 External glazing....369
Part 13.4 Building sealing 399
Part 13.5 Ceiling fans....402
Part 13.6 Whole-of-home energy usage 403
Part 13.7 Services....406

Schedule 1 Definitions

Abbreviations....414
Symbols....416
Glossary....418

Schedule 2 Referenced documents

Referenced documents....454

Schedule 3 Commonwealth of Australia

Schedule 4 Australian Capital Territory

Schedule 5 New South Wales

3 Site preparation....474
4 Footings and slabs....475
9 Fire safety....477
NSW Part 9.4 Fire protection of garage top dwellings....478
13 Energy efficiency....479
NSW Part 13.1 Scope and application of Section 13....483
Schedule 1 Definitions....484
Schedule 2 Referenced documents....486

Schedule 6 Northern Territory

3 Site preparation....490
10 Health and amenity....491
NT Part 10.7 Sound insulation....492
13 Energy efficiency....504
NT Part 13.1 Scope and application of Section 13....505
NT Part 13.2 Building fabric....506
NT Part 13.3 External glazing....514
NT Part 13.4 Building sealing....517
NT Part 13.5 Air movement....519
NT Part 13.7 Services....521
Schedule 2 Referenced documents....524

Schedule 7 Queensland

3 Site preparation....526
Schedule 1 Definitions....528
Schedule 2 Referenced documents....529

Schedule 8 South Australia

4 Footings and slabs....531
9 Fire safety....533
10 Health and amenity....538

13 Energy efficiency 541
Schedule 1 Definitions 542
Schedule 2 Referenced documents 544

Schedule 9 Tasmania
10 Health and amenity 546
13 Energy efficiency 547
Schedule 1 Definitions 548
Schedule 2 Referenced documents 549

Schedule 10 Victoria
Schedule 1 Definitions 554
Schedule 2 Referenced documents 556

Schedule 11 Western Australia
WA Introduction 563
2 Structure 564
WA Part 2.3 Changes to AS/NZS 1170.2:2021 and AS 4055:2021 568
Schedule 1 Definitions 574
Schedule 2 Referenced documents 575

How to use the Housing Provisions

This Section is for information only.

1.1 Introduction

The ABCB Housing Provisions contains *Deemed-to-Satisfy Provisions* that are considered to be acceptable forms of construction that meet the requirements for complying with Parts H1 to H8 of NCC Volume Two (i.e. they comply with the *Performance Requirements* listed in Parts H1 to H8 of NCC Volume Two).

There is no obligation to adopt any particular option contained in the ABCB Housing Provisions if it is preferred to meet the *Performance Requirements* some other way.

However, if one of the options described in the ABCB Housing Provisions or elsewhere in the *Deemed-to-Satisfy Provisions* of NCC Volume Two is not complied with, then the *appropriate authority* must be satisfied that the *Performance Requirements* have been met.

1.2 Application

This Housing Provisions must be applied in accordance with each of the following:

- Section A (Governing Requirements) of NCC Volume Two.
- Any conditions on the use of the ABCB Housing Provisions set out within the *Deemed-to-Satisfy Provisions* of NCC Volume Two where it is referenced.
- The Scope clause at the beginning of each Section of the ABCB Housing Provisions.

1.3 The scope of the ABCB Housing Provisions

In Section H of NCC Volume Two, some *Deemed-to-Satisfy Provisions* contain more than one compliance pathway. Usually, the first of these pathways will be by reference to a relevant Australian Standard (or similar) and the second will be by reference to a particular Section or Part of the ABCB Housing Provisions. In these cases, use of the ABCB Housing Provisions is one option for complying with the relevant *Deemed-to-Satisfy Provision*.

Other *Deemed-to-Satisfy Provisions* contain only one compliance pathway: either a reference to an Australian Standard (or similar), or a reference to a particular Section or Part of the ABCB Housing Provisions. In these cases, the ABCB Housing Provisions may only be used if it is referenced, and must be used if it is the only compliance option for the particular *Deemed-to-Satisfy Provision*.

If a *Deemed-to-Satisfy Provision* does not reference the ABCB Housing Provisions, then the ABCB Housing Provisions cannot be used as a compliance pathway for that particular *Deemed-to-Satisfy Provision*.

The ABCB Housing Provisions only contains content relevant to the *Deemed-to-Satisfy Provisions* in NCC Volume Two which call it up. Therefore, the ABCB Housing Provisions should not be interpreted as a comprehensive or complete manual for house building.

Section 2 of the ABCB Housing Provisions contains a number of structural design manuals which can be used to design building elements using engineering principles. There is no obligation for the provisions of Section 2 to be used apart from situations where a particular building, building element or component is required to comply with NCC Volume Two and is not within the scope of any other *Deemed-to-Satisfy Provisions*.

Section 12 contains additional construction requirements that are ancillary to the construction of a building or structure, such as the construction of *swimming pools*, heating appliances, fireplaces, methods of attaching decks and balconies to *external walls* or the like. Section 12 also contains special provisions for construction in *alpine areas*. Earthquake areas are addressed in Section 2 and *flood hazard areas* are addressed in the ABCB Standard for Construction of Buildings in Flood Hazard Areas, which is referenced directly by H1D10.

Situations where it is necessary for a mixed application of the ABCB Housing Provisions and other documents referenced in the *Deemed-to-Satisfy Provisions* of NCC Volume Two may be identified by reference to the differing components of the *Performance Requirements* (see A2G3).

1.4 Suitability of Performance Solutions

The options described in the *Deemed-to-Satisfy Provisions* are typical examples of national construction methods. They are not the only means available for complying with NCC Volume Two. The performance format of the NCC provides flexibility and allows the use of alternative construction methods to those described in the *Deemed-to-Satisfy Provisions*.

1.5 The use of maps

Maps have been used throughout NCC Volume Two, including in the ABCB Housing Provisions, to indicate areas where particular requirements apply. These maps are indicative and some variation in conditions will apply, especially on the border of marked areas.

It is recommended that the *appropriate authority* be consulted and in most cases they should be able to identify what conditions apply in such areas at the early stage of building design.

1.6 Consultation with appropriate authorities

When building in certain locations there may be local conditions or other site constraints that may limit the type of construction that can be used. This is particularly important with buildings that are constructed in areas subject to increased structural loading conditions that may occur due to geographical, topographical or climatic conditions and soil types.

Appropriate authorities have a wide range of experience and information on the geographical and topographical conditions found in their area of responsibility, and should be consulted during the initial design stage.

1.7 Layout of the ABCB Housing Provisions

Although they do not cover every aspect of housing construction, the ABCB Housing Provisions have nonetheless been organised in a manner that follows the logical construction sequence of a building. Table 1.7 outlines some of the more frequently used details and where they are located in the ABCB Housing Provisions or NCC Volume Two.

Table 1.7: Information guide

Stage	Relevant part	Reference(s)
Initial design considerations	Earthworks	3.2
	Fire Safety	9
	Facilities	10.4
	Room heights	10.3
	Light and ventilation	10.5, 10.6
	Stairway and ramp construction	11.2
	Energy efficiency	13
	Site preparation and drainage	3.1,3.3
	Footings and slabs	4
	Masonry	5
	Framing	6
	Roof cladding, gutters and downpipes and wall cladding	7
	Gutters and downpipes	7.4
	Glazing	8
	Barriers and handrails	11.3
	Livable housing design	H8 (NCC Volume Two)
Construction issues	Wet areas and external waterproofing	10.2
	Sound insulation	10.7
	Condensation management	10.8
	Swimming pools	H7D2 (NCC Volume Two)

Stage	Relevant part	Reference(s)
	Termite risk management	3.4
	Earth retaining structures	H1D3 (NCC Volume Two)
	Subfloor ventilation	6.2
	Smoke alarms and evacuation lighting	9.5
	Boilers, pressure vessels, heating appliances, fireplaces, chimneys and flues	12.4
Special requirements	Earthquake areas	2
	Flood hazard areas	H1D10 (NCC Volume Two)
	Construction in bushfire areas	H7D4 (NCC Volume Two)
	Construction in alpine areas	12.2
	Attachment of decks and balconies to external walls of buildings	12.3
	High wind areas	2
	Class 10 buildings and structures	Various

1.8 Interpretation

Throughout the ABCB Housing Provisions, diagrams, explanatory information and cross-volume considerations are included. A1G4 (interpretation) contains information on these elements in the NCC, which is also applicable when they appear in the ABCB Housing Provisions.

1.9 How to use the requirements of each Section/Part

Each Section of the ABCB Housing Provisions is comprised of a scope statement and one or more Parts which contain the technical provisions which must be followed as appropriate to achieve compliance with the relevant *Deemed-to-Satisfy Provisions*. Generally, a *Deemed-to-Satisfy Provision* will refer to a specific Part of the ABCB Housing Provisions in order to link the user directly to the relevant technical provisions.

Each Section contains a scope and application Part which sets out the conditions and limitation applicable to the subsequent Parts contained within that Section. Each Part must only be applied in a way that is consistent with its scope.

Sections are numbered with a single numeral (e.g. Section 2 - Structure).

Parts are numbered with two numbers separated by a decimal (e.g. Part 2.2 – Structural provisions).

Clauses within each Part are numbered with three numbers separated by a decimal point (e.g. Clause 2.2.4 – Determination of structural resistance of materials and forms of construction).

Sub-clauses and below are numbered using the system used throughout the NCC.

List of amendments - ABCB Housing Provisions

This list has been prepared by the Australian Building Codes Board to assist National Construction Code (NCC) users in identifying changes incorporated in the 2022 edition of the ABCB Housing Provisions.

The notes provide a description of major changes made from the previous edition of the Housing Provisions (NCC Volume Two).

While the Australian Building Codes Board has attempted to include all major changes made from the previous edition of the Housing Provisions, the Board does not give any warranty nor accept any liability in relation to the contents of this list of amendments.

Table 1: List of amendments - ABCB Housing Provisions

Reference	Changes and Commentary
General	
Throughout	A “Scope” and “Application” has been added to each Section of the ABCB Housing Provisions. This sets out the conditions and limitations applicable to the subsequent Parts within that Section.
Throughout	A number of provisions have been amended, restructured, deleted and relocated as part of the initiative to provide a consistent NCC structure and improve NCC usability.
Section 3—Site preparation	
3.3.3	Amended as a consequence of including new Livable housing design requirements in Part H8 of Volume Two.
Section 4—Footings and slabs	
Section 4	Amendments, including insertion of new provisions, tables, diagrams and grouping provisions, have been made to reflect current practice, improve readability and structure. The construction of footings and slabs has been reduced to a certain geometric size and the applicability to soil classifications is restricted to Class A, S and M sites.
4.2.11	The requirement for reinforcing re-entrant corners moved from 2019: 3.2.5.3 to this clause as part of steel reinforcement requirements. Explanatory information has also been provided.
4.2.20	A new provision has been added for localised thickening for footings or slabs supporting concentrated loads.
4.2.22	A new provision has been added for recesses in slabs.
Section 5—Masonry	
5.1	A new provision has been inserted as a consequence to new clauses 5.7.3 and 5.7.4.
5.2.4	A new provision has been inserted as a consequence to new clauses 5.7.3 and 5.7.4.
5.2.5	A new provision has been added as a consequence to new clause 5.6.8.
5.3	A new Part has been added and contains provisions related to cavity masonry.
5.4	A new Part has been added and contains provisions related to unreinforced single leaf masonry.
5.5	The Part has been re-named to ‘Isolated piers’ and contains content in Part 3.3.6 of Volume Two 2019 Amendment 1.
5.6	A new Part, ‘Masonry components and accessories’ has been added and incorporates some content from Part 3.3.5 of Volume Two 2019 Amendment 1. It includes amendments and new provisions to reflect current practice, improve readability and structure.
5.6.6	New explanatory information has been added to Figure 5.6.6c referenced in clause 5.6.6 to guide designs for roof tie-down over openings greater than 1200 mm wide in masonry construction.

Reference	Changes and Commentary
5.7	A new Part 'Weatherproofing for masonry' has been added and incorporates some content from Part 3.3.5 of Volume Two 2019 Amendment 1. It includes amendments and new provisions to reflect current practice, improve readability and structure.
5.7.6	A new provision has been added for waterproofing for single leaf masonry walls to compliment new Part 5.4.
Section 6—Framing	
6.3	Amendments for structural steel members, including insertion of new tables, diagrams and explanatory information, have been made to improve readability and structure.
6.3.3	A new provision has been added for steel bearers as part of the restructure of Section 6—Framing.
6.3.4	A new provision has been added for steel strutting beams as part of the restructure of Section 6—Framing.
6.3.5	A new provision has been added for steel lintels as part of the restructure of Section 6—Framing.
6.3.6	A new provision has been added for steel columns as part of the restructure of Section 6—Framing.
6.3.7	A new provision has been added providing details for fixings and bearing for structural steel members. This includes additional figures for various fixing details.
6.3.8	A new provision has been added providing details for cuts and penetrations through structural steel members.
6.3.9	Tables relating to protective coatings for steelwork have been changed to provide greater detail and additional options for corrosion protection.
Section 7—Roof and wall cladding	
7.2.8	Amended to require sheets overhang not less than 50 mm where an eaves gutter is provided.
7.4	Amendments, including insertion of new tables, diagrams and explanatory information, have been made to reflect current practice, improve readability and structure. The amendments also align annual exceedance probability figures with AS 3500.3-2021 replacing average recurrence interval figures.
Tables 7.5.2, 7.5.3a and 7.5.3b	Table note has been amended to refer base metal thickness of steel framing members to that required for a roof batten in NASH Standard.
Section 8—Glazing	
8.2	Part 8.2 has been re-named, groups provisions relevant to windows and external glazed doors and contains amendments, including insertion of new tables, diagrams and explanatory information, to improve readability and structure.
8.2.2	A new provision has been added for the installation of windows.
8.3.3	Amended to reflect new terminology 'monolithic' in lieu of 'ordinary' to reflect current practice.
8.4	A new Part has been added, re-named and groups provisions relevant to glazing human impact and contains amendments, including insertion of new tables, diagrams and explanatory information to improve readability and structure.
8.4.6	Amended to include provisions for mirrors and splashbacks.
8.4.8	A new provision has been added for the identification of safety glass.
Section 9—Fire safety	
9.2.9	Amendments have been made to clarify application of allowable encroachments.
Section 10—Health and amenity	
10.2	Amendments, including insertion of new Deemed-to-Satisfy Provisions, tables, diagrams and explanatory information, have been made to reflect current practice, improve readability and structure.

Reference	Changes and Commentary
10.2.2	Amended to require walls in shower areas to be waterproof to not less than 1800 mm above the floor substrate.
10.2.5	A new sub-clause has been added for WCs with handheld bidet spray installations.
10.2.6	A new provision has been added for waterproofing systems distinguishing how systems are deemed either waterproof or water resistant.
10.2.7	A new provision has been added stating materials used in wet areas must be either waterproof or water resistant.
10.2.8	A new provision has been added setting out what materials used in waterproofing systems are deemed to be waterproof.
10.2.9	A new provision has been added setting out materials deemed to be water resistant for wall and floor substrates.
10.2.10	A new provision has been added setting out materials deemed to be water resistant for wall and floor surface materials.
10.2.11	A new provision has been added setting out the relevant Part to be complied with for wall and floor substrates in wet areas.
10.2.12	A new provision has been added for falls to wet area floors.
10.2.13	A new provision has been added setting out the relevant Part to be complied with for wall and floor surface materials in wet areas.
10.2.14	A new provision has been added for shower area requirements.
10.2.15	A new provision has been added for step-down showers.
10.2.16	A new provision has been added for the hob construction of showers.
10.2.17	A new provision has been added for enclosed showers with level threshold.
10.2.18	A new provision has been added for unenclosed showers.
10.2.19	A new provision has been added for preformed shower bases.
10.2.20	A new provision has been added for baths and spas.
10.2.21	A new provision has been added relating to the membrane installation for screeds and location of tiles.
10.2.22	A new provision has been added for the substrate surface preparation where membranes are to be applied.
10.2.23	A new provision has been added for the treatment of penetrations within shower areas.
10.2.24	A new provision has been added relating to the installation of flashings and treatment of junctions including vertical and horizontal legs at perimeters.
10.2.25	A new provision has been added for the application of shower area floor membranes.
10.2.26	A new provision has been added relating to shower area membrane requirements for wall sheeting substrates.
10.2.27	A new provision has been added relating to the installation of bond breakers for bonded membranes.
10.2.28	A new provision has been added for the installation of internal membranes.
10.2.29	A new provision has been added detailing membrane to drainage connections.
10.2.30	A new provision has been added detailing drainage riser connections.
10.2.31	A new provision has been added relative to door jambs on tiled floors.
10.2.32	A new provision has been added for the installation and location of shower screens.
10.8.1	Amended to include vapour permeance requirements for several materials in climate zones 4 to 8.
10.8.2	Amended to include additional exhaust requirements, including ducting of exhausts to outdoor air, exhaust run-on timers in some rooms and provision of make-up air to some rooms.

Reference	Changes and Commentary
10.8.3	Amended to require a ventilated roof space in climate zones 6, 7 and 8, with exceptions for concrete roofs, roofs made from structural insulated panels and roofs subject to Bushfire Attack Level FZ.
Section 11—Safe movement and access	
11.2.3	A note has been inserted as a consequence of new Part H8 Livable housing design in Volume Two.
11.3.4	Amended and includes new sub-clause (5) and (6) to provide a maximum opening between barrier and vertical face of a landing, balcony, deck, stairway or the like.
Section 12—Ancillary provisions	
12.1.1	Scope has been amended to reflect the deletion of boilers and pressure vessels from Part 12.4 of the ABCB Housing Provisions.
12.3	Heading amended to improve clarity and application of part.
12.3.2	Timber waling plate sizes and fixings have been amended to reflect contemporary available materials and practices.
12.4	Amendments, including deletion of boilers and pressure vessels, have been made to reflect current practice, improve readability and structure.
12.4.3	An additional sub-clause 12.4.3(b) has been included relative to the composition of mortar.
12.4.4	Sub-clause 12.4.4(a) has two additional and further sub-clauses clarifying the testing and fitting of insert fireplaces and flues.
12.4.5	An explanatory note has been added to clause 12.4.5 to clarify the application of testing standards and Deemed-to-Satisfy Provisions.
12.4.5	Sub-clause 12.4.5(b) has been amended to clarify the masonry construction for heat shields. Sub-clause 12.4.5(b) has also been amended to add flashing requirements for flues.
Section 13—Energy efficiency	
13.2.3	Amended to improve the performance of roofs and ceilings in order to achieve the equivalent of a 7 stars NatHERS energy rating for thermal performance under Deemed-to-Satisfy elemental provisions. A requirement to address thermal bridging in metal-framed roofs has also been added.
13.2.4	Amended to align with roof light requirements in Volume One.
13.2.5	Amended to improve the performance of walls in order to achieve the equivalent of a 7 stars NatHERS energy rating for thermal performance under Deemed-to-Satisfy elemental provisions. A requirement to address thermal bridging in metal-framed walls has also been added.
13.2.6	Amended to improve the performance of floors and subfloor walls in order to achieve the equivalent of a 7 stars NatHERS energy rating for thermal performance under Deemed-to-Satisfy elemental provisions. A requirement to address thermal bridging in metal-framed floors has also been added.
13.3	Amended to improve the performance of external glazing in order to achieve the equivalent of a 7 stars NatHERS energy rating for thermal performance under Deemed-to-Satisfy elemental provisions.
13.5	Amended to include new ceiling fan requirements for climate zones 1,2,3 and 5 (Queensland and New South Wales only).
13.6	A new part has been added containing provisions related to whole-of-home energy usage.
13.7.8	Amended to include a minimum R-Value for swimming pool covers.
Schedule 1—Definitions	

Reference	Changes and Commentary
Schedule 1	Schedule 1 has been amended as part of the initiative to improve readability of the NCC. Schedule 1 – Definitions includes Abbreviations, Symbols and Glossary. States & Territory Appendices (formerly located in Schedule 1) have been incorporated into Schedule 3 to Schedule 11.
Abbreviations	Acrylic conformal coating (ACC) has been added.
Abbreviations	Acrylic latex (ACL) has been added.
Abbreviations	Australian Institute of Refrigeration, Air conditioning and Heating (AIRAH) has been added.
Abbreviations	American National Standards Institute (ANSI) has been added.
Abbreviations	American Society of Heating, Refrigerating and Air Conditioning Engineers (ASHRAE) has been added.
Abbreviations	National Standard of Canada (CAN) has been added.
Abbreviations	Chartered Institution of Building Services Engineer (CIBSE) has been added.
Abbreviations	Flame zone (FZ) has been added.
Abbreviations	Greenhouse and Energy Minimum Standards (GEMS) has been added.
Abbreviations	Hot dip galvanising (HDG) has been added.
Abbreviations	Inorganic zinc silicate (IZS) has been added.
Abbreviations	NATA has been amended to include reference to Australia.
Abbreviations	National Sanitation Foundation (NSF) has been added.
Abbreviations	Polyurethane (PUR) has been added.
Symbols	µg/N.s has been added.
Symbols	f'c has been added.
Symbols	f'y has been added.
Symbols	G has been added.
Symbols	N/m has been added.
Symbols	Q has been added.
Symbols	ULS has been added.
Glossary	A defined term, 'Above ground rainwater tank', has been added.
Glossary	A defined term, 'Annual exceedance probability', has been added as a consequence of amendments to Part 7.4 Gutters and downpipes of the ABCB Housing Provisions.
Glossary	A defined term, 'Assumed cooling thermostat set point' has been added as a consequence of quantification in J1P2 and H6P1.
Glossary	A defined term, 'Average recurrence interval', has been deleted as a consequence of amendments to Part 7.4 Gutters and downpipes of the ABCB Housing Provisions.
Glossary	A defined term, 'Bond breaker', has been added as a consequence of amendments to Part 10.2 of the ABCB Housing Provisions.
Glossary	A defined term, 'Building complexity criteria', has been added.
Glossary	A defined term, 'Buried rainwater tank', has been added as a consequence of amendments to Specification 41 of Volume Three.
Glossary	A defined term, 'Cooling degree hours' has been added as a consequence of quantification in J1P2 and H6P1.
Glossary	A defined term, 'Daily outdoor temperature range' has been added as a consequence of quantification in J1P2 and H6P1.
Glossary	A defined term, 'Dehumidification gram hours', has been added as a consequence of quantification in J1P2 and H6P1.
Glossary	A defined term, 'Design bushfire', has been added as a consequence of amendments to Part G5.

Reference	Changes and Commentary
Glossary	The defined term, 'Domestic services', has been amended to include on-site renewable energy equipment as a result of quantification in J1P3 and H6P2.
Glossary	A defined term, 'Drainage flange', has been added as a consequence of amendments to Part 10.2 of the ABCB Housing Provisions.
Glossary	A defined term, 'Drainage riser', has been added as a consequence of amendments to Part 10.2 of the ABCB Housing Provisions.
Glossary	A defined term, 'Efficacy', has been added as a consequence of including quantified Performance Requirement H3P2 for automatic warning for occupants.
Glossary	A defined term, 'Energy value', has been added as a consequence of quantification in J1P3 and H6P2.
Glossary	A defined term, 'Engaged pier', has been added as a consequence of amendments to Section 5 of the ABCB Housing Provisions.
Glossary	A defined term, 'Fire actions', has been added as a consequence of amendments to Part G5.
Glossary	The defined term, 'Flashing', has been amended to clarify perimeter and vertical flashings as a consequence of amendments to Part 10.2 of the ABCB Housing Provisions.
Glossary	The defined term, 'Floor area', for Volume One, has been amended on account of new defined term 'Volume'.
Glossary	A defined term, 'Floor waste', has been added as a consequence of amendments to Part 10.2 of the ABCB Housing Provisions.
Glossary	The defined term, 'Glazing', has been amended as a consequence of the updates to the energy efficiency Deemed-to-Satisfy provisions for Class 2 buildings.
Glossary	A defined term, 'Heating degree hours', has been added as a consequence of quantification in J1P2 and H6P1.
Glossary	A defined term, 'Hob', has been added as a consequence of amendments to Part 10.2 of the ABCB Housing Provisions.
Glossary	A defined term 'Irrigation system', has been added as a consequence of amendments to S41C2 in Volume Three.
Glossary	A defined term, 'Lateral support', has been added as a consequence of amendments to Part 5.3 of the ABCB Housing Provisions.
Glossary	A defined term, 'Main water heater' has been added as a consequence of including new whole-of-home energy efficiency requirements.
Glossary	A defined term, 'Main space conditioning' has been added as a consequence of including new whole-of-home energy efficiency requirements.
Glossary	A defined term, 'Maximum retained water level', has been added as a consequence of amendments to Part 10.2 of the ABCB Housing Provisions.
Glossary	A defined term, 'Membrane', has been added as a consequence of amendments to Part 10.2 of the ABCB Housing Provisions.
Glossary	The defined term, 'NABERS Energy for Offices' has been amended to be 'NABERS Energy' to reflect its use for multiple building classifications.
Glossary	The defined term, 'Performance-based design brief' has been amended for clarity.
Glossary	The defined term, 'Point of connection', has been amended for clarity.
Glossary	A defined term, 'Preformed shower base', has been added as a consequence of amendments to Part 10.2 of the ABCB Housing Provisions.
Glossary	A defined term, 'Primary insulation layer', has been added as a consequence of amendments to condensation management provisions.
Glossary	The defined term, 'Rainwater harvesting system', has been amended to 'Rainwater service' and 'Rainwater storage' as a consequence of amendments to Part B6 of Volume Three.

Reference	Changes and Commentary
Glossary	The defined term 'Reliability' has been added as a consequence of including quantified Performance Requirements for automatic warning for occupants.
Glossary	The defined term 'Reference building' has been amended to remove reference to Thermal comfort levels and as a consequence of the introduction of J1V5.
Glossary	A defined term, 'Screed', has been added as a consequence of amendments to Part 10.2 of the ABCB Housing Provisions.
Glossary	The defined term, 'Shower area', has been amended to clarify enclosed and unenclosed shower areas as a consequence of amendments to Part 10.2 of the ABCB Housing Provisions.
Glossary	A defined term, 'Shower screen', has been added as a consequence of amendments to Part 10.2 of the ABCB Housing Provisions.
Glossary	A defined term, 'Thermal energy load', has been added as a consequence of quantification in J1P2 and H6P1.
Glossary	The defined term 'Total R-Value' in the ABCB Housing Provisions has been amended to align with Volume One.
Glossary	The defined term 'Total System U-Value' in the ABCB Housing Provisions has been amended to align with Volume One.
Glossary	A defined term 'Unprotected water service', has been added as a consequence of introducing new provision for unprotected water service – B5D5 of Volume Three.
Glossary	A defined term, 'Vapour permeance', has been added as a consequence of amendments to the condensation management provisions.
Glossary	A defined term, 'Volume', has been added to clarify the volume space with respect to a building, fire compartment and atrium.
Glossary	A defined term, 'Waterproofing system', has been added as a consequence of amendments to Part 10.2 of the ABCB Housing Provisions.
Glossary	A defined term, 'Water stop', has been added as a consequence of amendments to Part 10.2 of the ABCB Housing Provisions.
Glossary	A defined term, 'Weighted average', has been added as a consequence of amendments to A5G4.
Glossary	A defined term, 'Wetted surface area', has been added to provide clarification to the defined term 'Weighted average'.
Schedule 2—Referenced documents	
AS/NZS 1170.2	The 2021 edition of AS/NZS 1170 Part 2 'Structural design actions — Wind actions' has been referenced.
AS 1288	The 2021 edition of AS 1288 'Glass in buildings — Selection and installation' has been referenced.
AS 1397	The 2021 edition of AS 1397 'Continuous hot-dip metallic coated steel sheet and strip — Coatings of zinc and zinc alloyed with aluminium and magnesium' has been referenced. A note has been included to outline transitional arrangements.
AS 1530 Parts 1 to 4	The notes to AS 1530 Parts 1 to 4 have been deleted.
AS 1530.8.1	The 2018 edition of AS 1530 Part 8.1 'Methods for fire tests on building materials, components and structures — Tests on elements of construction for buildings exposed to simulated bushfire attack — Radiant heat and small flaming sources' has been referenced.
AS/NZS 1546.1	The 2008 edition of AS/NZS 1546 Part 1 'On-site domestic wastewater treatment units — Septic tanks' has been referenced.
AS/NZS 1546.2	The 2008 edition of AS/NZS 1546 Part 2 'On-site domestic wastewater treatment units — Waterless composting toilets' has been referenced.
AS 1546.3	Amdt 1 of the 2017 edition of AS 1546 Part 3 'On-site domestic wastewater treatment units — Secondary treatment systems (incorporating amendment 1)' has been referenced.

Reference	Changes and Commentary
AS 1546.4	The 2016 edition of AS 1546 Part 4 'On-site domestic wastewater treatment units — Domestic greywater treatment systems' has been referenced.
AS/NZS 1547	The 2012 edition of AS/NZS 1547 'On-site domestic wastewater management' has been referenced.
AS/NZS 1562.2	The 1999 edition of AS/NZS 1562 Part 2 'Design and installation of sheet roof and wall cladding — Corrugated fibre-reinforced cement' has been deleted.
AS 1562.3	The 2006 edition of AS 1562 Part 3 'Design and installation of sheet roof and wall cladding — Plastic' has been referenced.
AS 1670.1	Amdt 1 of the 2018 edition AS 1670 Part 1 'Fire detection, warning, control and intercom systems — System design, installation and commissioning — Fire (incorporating amendment 1)' has been referenced. Notes to AS 1670 have been amended to outline transitional arrangements.
AS 1670.3	Amdt 1 of the 2018 edition AS 1670 Part 3 'Fire detection, warning, control and intercom systems — System design, installation and commissioning — Fire alarm monitoring (incorporating amendment 1)' has been referenced. Notes to AS 1670 have been amended to outline transitional arrangements.
AS 1670.4	Amdt 1 of the 2018 edition AS 1670 Part 4 'Fire detection, warning, control and intercom systems — System design, installation and commissioning — Emergency warning and intercom systems (incorporating amendment 1)' has been referenced. Notes to AS 1670 have been amended to outline transitional arrangements.
AS 1684.2	The 2021 edition of AS 1684 Part 2 'Residential timber-framed construction — Non-cyclonic areas' has been referenced.
AS 1684.3	The 2021 edition of AS 1684 Part 3 'Residential timber-framed construction —Cyclonic areas' has been referenced.
AS/NZS 1720.4	The 2019 edition of AS/NZS 1720 Part 4 'Timber structures — Fire resistance of timber elements' has been referenced.
AS 1720.5	Amdt 1 of the 2015 edition of AS 1720 Part 5 'Timber structures —Nailplated timber roof trusses (incorporating amendment 1)' has been referenced.
AS/NZS 1859.4	The note to AS/NZS 1859 Part 4 has been deleted.
AS 2118.1	Amdt 2 of the 2017 edition of AS 2118 Part 1 'Automatic fire sprinkler systems — General systems (incorporating amendments 1 and 2)' has been referenced.
AS 2118.4	The 2012 edition of AS 2118 Part 4 'Automatic fire sprinkler systems — Sprinkler protection for accommodation buildings not exceeding four storeys in height'.
AS 2118.5	The 2008 edition of AS 2118 Part 5 'Automatic fire sprinkler systems — Home fire sprinkler systems' has been referenced.
AS 2118.6	The 2012 edition of AS 2118 Part 6 'Automatic fire sprinkler systems — Combined sprinkler and hydrant systems in multistorey buildings.'
AS/NZS 2293.1	Amdt 1 of the 2018 edition of AS/NZS 2293 Part 1 'Emergency lighting and exit signs for buildings — System design, installation and operation (incorporating amendment 1)' has been referenced.
AS 2312.1	The 2014 edition of AS 2312 Part 1 'Guide to the protection of structural steel against atmospheric corrosion by the use of protective coatings — Paint coatings' has been referenced.
AS/NZS 2312.2	The 2014 edition of AS 2312/NZS Part 2 'Guide to the protection of structural steel against atmospheric corrosion by the use of protective coatings — Hot dip galvanizing' has been referenced.
AS/NZS 2327	Amdt 1 of the 2017 edition of AS/NZS 2327 'Composite structures — composite steel-concrete construction in buildings (incorporating amendment 1)' has been referenced.
AS 2419.1	The 2021 edition of AS 2419 Part 1 'Fire hydrant installations — System design, installation and commissioning' has been referenced.

Reference	Changes and Commentary
AS 2699.1	The 2020 edition of AS 2699 Part 1 'Built-in components for masonry construction — Wall ties' has been referenced. A note has been included to outline transitional arrangements.
AS 2699.3	The 2020 edition of AS 2699 Part 3 'Built-in components for masonry construction — Lintels and shelf angles (durability requirements)' has been referenced. A note has been included to outline transitional arrangements.
AS/NZS 3500.0	The 2021 edition of AS 3500 Part 0 'Plumbing and drainage — Glossary of terms' has been referenced.
AS/NZS 3500.1	The 2021 edition of AS 3500 Part 1 'Plumbing and drainage — Water services' has been referenced.
AS/NZS 3500.2	Amdt 1 of the 2021 edition of AS 3500 Part 2 'Plumbing and drainage — Sanitary plumbing and drainage (incorporating amendment 1)' has been referenced.
AS/NZS 3500.3	The 2021 edition of AS 3500 Part 3 'Plumbing and drainage — Stormwater drainage' has been referenced. A note has been included to outline transitional arrangements.
AS/NZS 3500.4	The 2021 edition of AS 3500 Part 4 'Plumbing and drainage — Heated water services' has been referenced.
AS 3600	Amdt 2 of the 2018 edition of AS 3600 'Concrete structures (incorporating amendments 1 and 2)' has been referenced.
AS 3740	The 2021 edition of AS 3740 'Waterproofing of domestic wet areas' has been referenced.
AS 3959	Amdts 1 and 2 of the 2018 edition of AS 3959 'Construction of buildings in bushfire-prone areas (incorporating amendments 1 and 2)' has been referenced.
AS 4055	The 2021 edition of AS 4055 'Wind loads for housing' has been referenced.
AS 4072.1	The note to AS 4072 Part 1 has been deleted.
AS 4100	The 2020 edition of AS 4100 'Steel structures' has been referenced.
AS 4200.1	Amdt 1 of the 2017 edition of AS 4200 Part 1 'Pliable building membranes and underlays — Materials (incorporating amendment 1)' has been referenced.
AS 4200.2	Amdts 1 and 2 of the 2017 edition of AS 4200 Part 2 'Pliable building membranes and underlays — Installation (incorporating amendments 1 and 2)' has been referenced.
AS/NZS 4234	The 2021 edition of AS/NZS 4234 'Heated water systems — Calculation of energy consumption' has been referenced.
AS 4254.1	The 2021 edition of AS 4254 Part 1 'Ductwork for air-handling systems in buildings — Flexible duct' has been referenced.
AS/NZS 4256.1	The 1994 edition of AS/NZS 4256 Part 1 'Plastic roof and wall cladding materials — General requirements' has been deleted.
AS/NZS 4256.2	The 1994 edition of AS/NZS 4256 Part 2 'Plastic roof and wall cladding materials — Unplasticized polyvinyl chloride (uPVC) building sheets' has been deleted.
AS/NZS 4256.3	The 1994 edition of AS/NZS 4256 Part 3 'Plastic roof and wall cladding materials — Glass fibre reinforced polyester (GRP)' has been deleted.
AS/NZS 4256.5	The 1996 edition of AS/NZS 4256 Part 5 'Plastic roof and wall cladding materials — Polycarbonate' has been deleted.
AS 4773.2	Amdt 1 of the 2015 edition of AS 4773 Part 2 'Masonry in small buildings — Construction' has been referenced.
AS/NZS 4858	The 2004 edition of AS/NZS 4858 'Wet area membranes' has been referenced.
AS 5146.3	The 2018 edition of AS 5146 Part 3 'Reinforced Autoclaved Aerated Concrete — Construction' has been referenced.
AS 5216	The 2021 edition of AS 5216 'Design of post-installed and cast-in fastenings in concrete' has been referenced.
AS/NZS 5601.1	The 2013 edition of AS/NZS 5601 Part 1 'Gas installations — General installations' has been referenced.

Reference	Changes and Commentary
AIRAH-DA07	The 2021 edition of AIRAH-DA07 'Criteria for moisture control design analysis in buildings' has been referenced.
ASTM E903	The 2012 edition of ASTM E903 'Standard Test Method for Solar Absorptance, Reflectance, and Transmittance of Materials Using Integrating Spheres' has been deleted.
ASTM E96	The 2016 edition of ASTM E96 'Standard Test Methods for Water Vapor Transmission of Materials' has been referenced.
ABCB	The 2022 version of the ABCB 'Fire Safety Verification Method' Standard has been referenced. As a consequence, the FSVM is deleted as a standalone schedule.
ABCB	The 2022 version of the ABCB 'Housing Provisions' Standard has been referenced.
ABCB	The 2022 version of the ABCB 'Livable Housing Design' Standard has been referenced.
ABCB	The 2022 version of the ABCB 'Standard for NatHERS Heating and Cooling Load Limits' has been referenced.
ABCB	The 2022 version of the ABCB 'Standard for Whole-of-home Efficiency Factors' has been referenced.
FPAA101D	The 2021 edition of FPAA101D 'Automatic Fire Sprinkler System Design and Installation — Drinking Water Supply' has been referenced.
FPAA101H	Amdt 1 of the 2018 edition of FPAA101H 'Automatic Fire Sprinkler System Design and Installation — Hydrant Water Supply (incorporating amendment 1)' has been referenced.
NASH Standard	The 2021 edition of NASH Standard 'Steel Framed Construction in Bushfire Areas' has been referenced.
NSF/ANSI/CAN 372	The 2020 edition of NSF/ANS/CAN 372 'Drinking Water System Components — Lead Content' has been referenced.

2 Structure

Part 2.1 **Scope and application of Section 2**

2.1.1 Scope

2.1.2 Application

Part 2.2 **Structural provisions**

2.2.1 Application of Part 2.2

2.2.2 Resistance to actions

2.2.3 Determination of individual actions

2.2.4 Determination of structural resistance of materials and forms of construction

2.2.5 Structural software

Part 2.1 Scope and application of Section 2

2.1.1 Scope

[New for 2022]

(1) This Section sets out the *Deemed-to-Satisfy Provisions* for structural stability and resistance (see Part 2.2).

(2) For other structural provisions not included in this Section, refer to the following *Deemed-to-Satisfy Provisions* in NCC Volume Two:

(a) Site preparation — see H1D3.

(b) Footings and slabs — see H1D4.

(c) Masonry — see H1D5.

(d) Framing — see H1D6.

(e) Roof and wall cladding — see H1D7.

(f) Glazing — see H1D8.

(g) Earthquake areas — see H1D9.

(h) *Flood hazard areas* — see H1D10.

(i) Attachment of decks and balconies to *external walls* of buildings — see H1D11.

2.1.2 Application

[New for 2022]

The application of Section 2 is subject to the following:

(a) The Governing Requirements of NCC Volume Two.

(b) The State and Territory variations, additions and deletions contained in the Schedules to the ABCB Housing Provisions and NCC Volume Two.

Explanatory Information

In NCC 2019, the content of Section 2 of the ABCB Housing Provisions (other than content added in NCC 2022 or later) was contained in Part 3.0 of NCC Volume Two.

Part 2.2 Structural provisions

2.2.1 Application of Part 2.2

[New for 2022]

Part 2.2 need not be complied with if, for the purposes of H1D2(b) only, the *Deemed-to-Satisfy Provisions* of H1D3 to H1D11 relating to structural elements are complied with.

2.2.2 Resistance to actions

[2019: 3.0.2]

The resistance of a building or structure must be greater than the most critical action effect resulting from different combinations of actions, where—

(a) the most critical action effect on a building or structure must be determined in accordance with 2.2.3 and the general design procedures contained in AS/NZS 1170.0; and

(b) the resistance of a building or structure is determined in accordance with 2.2.4.

Explanatory Information

A building or structure must be designed to resist the most critical effect resulting from different combinations of actions, taking into consideration—

- the probability of simultaneous occurrence of two or more actions; and
- the levels of reliability of the structure when subject to combined actions; and
- the characteristics of the action.

Determining the levels of reliability of the structure when subject to combined actions should be consistent with the levels of reliability implicit in the design events for natural phenomenon. When designing for the maximum combined actions, a principle frequently adopted is that the maximum is likely to occur when at least one of the actions is at its maximum value.

WA 2.2.3

2.2.3 Determination of individual actions

[2019: 3.0.3]

The magnitude of individual actions must be determined in accordance with the following:

(a) Permanent actions:

(i) the design or known dimensions of the building or structure; and

(ii) the unit weight of the construction; and

(iii) AS/NZS 1170.1.

(b) Imposed actions:

(i) the known loads that will be imposed during the occupation or use of the building or structure; and

(ii) *construction activity actions*; and

(iii) AS/NZS 1170.1.

(c) Wind, snow and earthquake actions:

(i) the applicable annual probability of design event for safety, determined by—

(A) assigning the building or structure an Importance Level in accordance with Table 2.2.3a; and

(B) determining the corresponding annual probability of exceedance for safety in accordance with Table

2.2.3b; and

(ii) for wind actions, AS/NZS 1170.2 or AS 4055; and

(iii) for snow and ice actions, AS/NZS 1170.3; and

(iv) for earthquake actions, AS 1170.4.

(d) Actions not covered in (a), (b) and (c) above:

(i) the nature of the action; and

(ii) the nature of the building or structure; and

(iii) the Importance Level of the building or structure determined in accordance with Table 2.2.3a; and

(iv) AS/NZS 1170.1.

(e) For the purposes of (d) the actions include but are not limited to—

(i) liquid pressure action; and

(ii) ground water action; and

(iii) rainwater action (including ponding action); and

(iv) earth pressure action; and

(v) differential movement; and

(vi) time dependent effects (including creep and shrinkage); and

(vii) thermal effects; and

(viii) ground movement caused by—

(A) swelling, shrinkage or freezing of the subsoil; and

(B) landslip or subsidence; and

(C) siteworks associated with the building or structure; and

(ix) *construction activity actions*.

Table 2.2.3a: Importance Levels of buildings and structures

Importance Level	Building types
1	Buildings or structures presenting a low degree of hazard to life and *other property* in the case of failure.
2	Buildings or structures not included in Importance Level 1.

Table 2.2.3b: Design events for safety—annual probability of exceedance

Importance Level	Non-cyclonic wind	Cyclonic wind	Snow	Earthquake
1	1:100	1:200	1:100	1:250
2	1:500	1:500	1:150	1:500

Figure 2.2.3: Wind regions

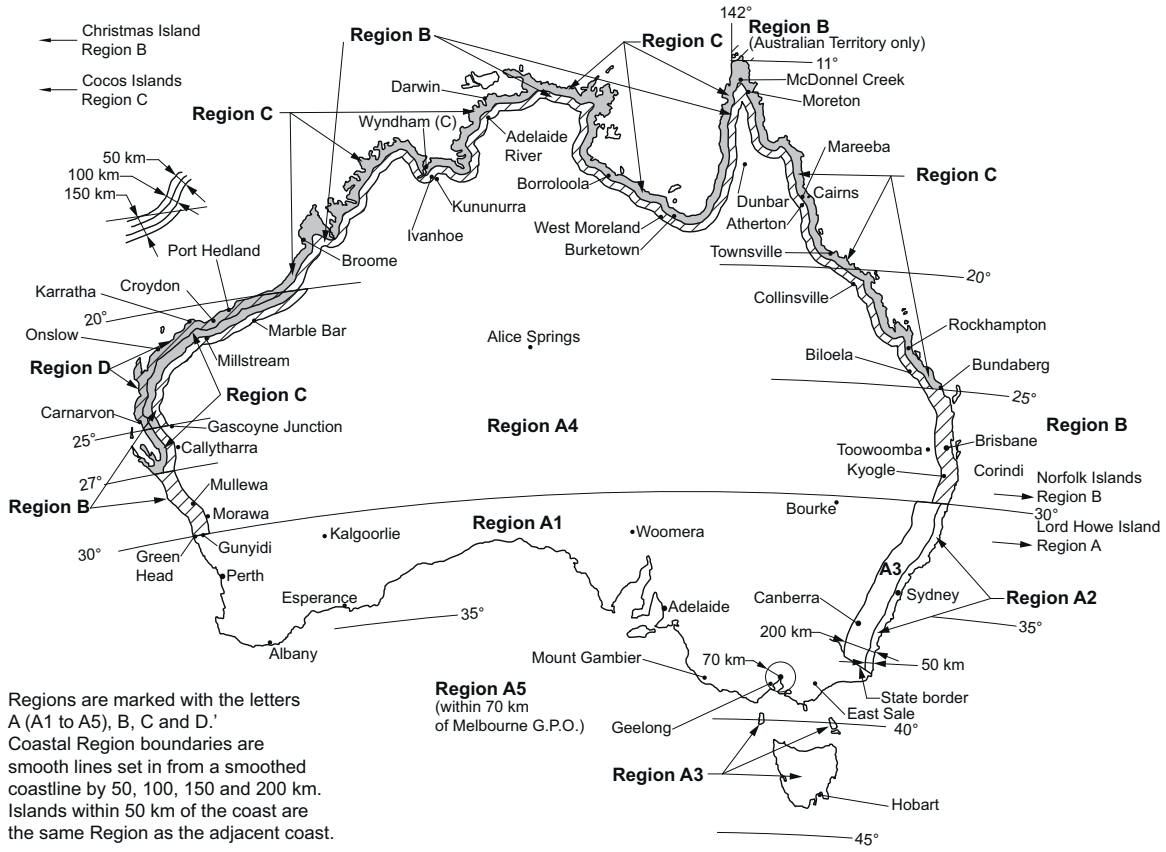

Explanatory Information: Permanent and imposed actions

Permanent actions include the dead loads of the building or structure. These include the load imposed by the building's components inclusive of the forces imposed by the floors, walls, roofs, suspended ceilings, etc.

Imposed actions include live loads on the building or structure. These include the load arising from construction activity and the intended use or function of the building or structure.

Explanatory Information: Application of AS 1170.4

There are certain limitations on the application to domestic structures such as Class 1a and Class 1b buildings in Appendix A of AS 1170.4. These limitations include building height, roof slope, etc. For additional information refer to Appendix A of AS 1170.4.

Explanatory Information: Importance Levels (Table 2.2.3a)

Table 2.2.3a provides a generic description of building types to which Importance Levels have been assigned. The "Importance Level" concept is applicable to building structural safety only. More specific examples are provided in the following list. The examples are indicative and not exhaustive.

- Importance Level 1: Isolated minor Class 10a buildings and Class 10b structures.
- Importance Level 2: Class 1 buildings; Class 10a buildings and Class 10b structures associated with Class 1 buildings.

Importance Levels must be assigned on a case by case basis and relate to the hazards to human life and *other property* in the event of the structure's failure. For example—

(a) Importance Level 1 is for minor isolated structures that rarely contain people, are not required as part of normal infrastructure and present a low risk to life and *other property*.

(b) Importance Level 2 includes domestic housing and structures intended to contain reasonable numbers of people under normal operations.

Explanatory Information: Construction in cyclonic areas

The intent of building construction in cyclonic areas (see Figure 2.2.3) is to ensure the structure has sufficient strength to transfer wind forces to the ground with an adequate safety margin to prevent collapse of the building and the building being lifted, or slid off its foundations.

To resist these forces it is necessary to have—

- an anchorage system, where the roof is connected by the walls to the footings by a chain of connections; and
- a bracing system to prevent horizontal collapse due to wind forces; and
- continuity of the system where each structural element is interlocked to its adjoining structural element throughout the building.

Explanatory Information: Anchorage

Anchorage of the system is achieved by using a variety of connectors. Each connector must be capable of carrying the uplift force, because the ability of the building to resist the wind forces is directly related to its weakest link.

WA 2.2.4

2.2.4 Determination of structural resistance of materials and forms of construction

[2019: 3.0.4]

The following requirements, or any combination of them, must be used to determine the structural resistance of materials and forms of construction as appropriate:

(a) Earthworks: H1D3(1).

(b) Earth retaining structures: H1D3(2).

(c) Termite risk management: H1D3(3).

(d) Concrete construction (including slabs and footings, and reinforced and prestressed concrete structures): H1D4.

(e) Piled footings: H1D12.

(f) Post-installed and cast-in fastenings in concrete: AS 5216.

(g) Masonry (including masonry veneer, *unreinforced masonry* and *reinforced masonry*): H1D5.

(h) Steel construction (including steel framing and structural steel members): H1D6.

(i) Timber construction (including design of timber structures, timber framing and design of nail-plated timber roof trusses): H1D6.

(j) Composite steel and concrete: AS/NZS 2327.

(k) Aluminium construction:

  (i) AS/NZS 1664.1.

  (ii) AS/NZS 1664.2.

(l) Roof construction (including plastic sheeting, roofing tiles, metal roofing and terracotta, fibre-cement and timber slates and shingles): H1D7.

(m) Wall cladding: H1D7.

(n) Glazed assemblies: H1D8.

(o) Barriers and handrails (including stairway and ramp construction):

  (i) H5D3; and

  (ii) AS/NZS 1170.1 for the determination of loading forces on a barrier.

(p) Attachment of decks and balconies to *external walls* of buildings: H1D11.

(q) Garage doors and other large access doors in openings not more than 3 m in height in *external walls* of buildings determined as being located in wind region C or D in accordance with Figure 2.2.3: AS/NZS 4505.

(r) For *high wind areas*: requirements listed in (a) to (q) as appropriate or the Northern Territory Deemed to Comply

Standards Manual.

Explanatory Information

The weight of roof or ceiling insulation, particularly if additional ceiling insulation is used for compliance with the energy efficiency provisions, needs to be considered in the selection of plasterboard, plasterboard fixings and building framing.

2.2.5 Structural software

[2019: 3.0.5]

(1) Structural software used in computer aided design of a building or structure that uses design criteria based on the *Deemed-to-Satisfy Provisions* of NCC Volume Two and the ABCB Housing Provisions, including its referenced documents, for the design of steel or timber trussed roof and floor systems and framed building systems, must comply with the ABCB Protocol for Structural Software.

(2) The requirements of (1) only apply to structural software used to design steel or timber trussed roof and floor systems and framed building systems for buildings within the following geometrical limits:

(a) The distance from ground level to the underside of eaves must not exceed 6 m.

(b) The distance from ground level to the highest point of the roof, neglecting chimneys, must not exceed 8.5 m.

(c) The building width including roofed verandahs, excluding eaves, must not exceed 16 m.

(d) The building length must not exceed five times the building width.

(e) The roof pitch must not exceed 35 degrees.

(3) The requirements of (1) do not apply to design software for individual frame members such as electronic tables similar to those provided in—

(a) AS 1684 Parts 2, 3 and 4; or

(b) NASH Standard Residential and Low-Rise Steel Framing, Part 2.

Explanatory Information

2.2.5 does not apply where a software package simply eliminates manual calculations and the process of the package requires identical methodology as that undertaken manually, e.g. AS 1684 span tables and bracing calculations.

3 Site preparation

Part 3.1 **Scope and application of Section 3**

3.1.1 Scope

3.1.2 Application

Part 3.2 **Earthworks**

3.2.1 Un-retained bulk earthworks – site cut and fill

Part 3.3 **Drainage**

3.3.1 Application

3.3.2 Drainage requirements

3.3.3 Surface water drainage

3.3.4 Subsoil drainage

3.3.5 Stormwater drainage

Part 3.4 **Termite risk management**

3.4.1 Requirements for termite management systems

3.4.2 Termite management systems

3.4.3 Durable notice

Part 3.1 Scope and application of Section 3

3.1.1 Scope

[New for 2022]

(1) This Section sets out the *Deemed-to-Satisfy Provisions* for—

(a) earthworks — Part 3.2; and

(b) drainage — Part 3.3; and

(c) termite risk management — Part 3.4.

(2) For other site preparation provisions not included in this Section, refer to NCC Volume Two: H1D3(2) Earth retaining structures.

Explanatory Information

These provisions relate to general *site* preparation for footings, services, drainage and installation of termite management systems. It should be noted that other construction methods may be used to achieve the same results as specified in this Part provided they comply with the appropriate *Performance Requirement*.

The provisions in Part 3.2 will enable earthworks associated with the construction of a building to be carried out safely and to avoid potential damage to the subject building, adjoining structures and property through the soil collapsing or subsiding. Exceptional *site* conditions (including the effects of torrential rain) may need special consideration and additional advice from appropriately qualified people should be considered.

State and Territory legislation may also have requirements that apply to earthworks, especially in relation to adjoining property and notification of owners of that property. Advice should be obtained from the *appropriate authority* before commencement of works.

The requirements of this Part are to be read in conjunction with H1D3(2) of NCC Volume Two where an earth retaining structure is installed.

NSW 3.1.2

3.1.2 Application

[New for 2022]

The application of this Section is subject to the following:

(a) The Governing Requirements of NCC 2022 Volume Two.

(b) Any conditions set out within the following *Deemed-to-Satisfy Provisions* of NCC Volume Two:

(i) H1D3(1), for earthworks.

(ii) H2D2, for drainage.

(c) The State and Territory variations, additions and deletions contained in the Schedules to the ABCB Housing Provisions and NCC Volume Two.

Explanatory Information

In NCC 2019, the content of Section 3 of the ABCB Housing Provisions (other than content added in NCC 2022 or later) was contained in the acceptable construction practices for Parts 3.1.1, 3.1.3 and 3.1.4 of NCC 2019 Volume Two.

NCC 2019 Volume Two did not include an acceptable construction practice for Part 3.1.2.

Part 3.2 Earthworks

3.2.1 Un-retained bulk earthworks – site cut and fill

[2019: 3.1.1.1, 3.1.1.2]

(1) A *site* cut using an un-retained embankment must be—

(a) within the allotment; and

(b) not within the zone of influence of any existing structure on the property, or the allotment boundary as defined in Table 3.2.1 and Figure 3.2.1a; and

(c) not deeper than 2 m from the natural ground level at any point.

(2) Fill, using an un-retained embankment must—

(a) be placed within the allotment; and

(b) be placed at a gradient which complies with Table 3.2.1 and Figure 3.2.1b; and

(c) be placed and mechanically compacted in layers not more than 150 mm; and

(d) be not more than 2 m in height from the natural ground level at any point; and

(e) where used to support footings or slabs, be placed and compacted in accordance with Part 4.2; and

(f) have *surface water* diverted away from any existing structure on the property or adjoining allotment in accordance with 3.3.3.

Table 3.2.1: Un-retained embankment slope ratios

Soil class (see 4.2.2 for material description)	Site cut (excavation) (maximum embankment slope ratio, angle of site cut H:L Note 1)	Compacted fill (maximum embankment slope ratio, angle of batter H:L Note 1)
Stable rock (Class A)	8:1	3:3
Sand (Class A)	1:2	1:2
Firm clay (Class M-E)	1:1	1:2
Soft clay (Class M-E)	2:3	Not suitable

Table Notes

(1) See Figures 3.2.1a and 3.2.1b for some examples of un-retained embankment slopes.

(2) Retaining walls must be installed in accordance with H1D3(2) where—

(a) the embankment slope is steeper than described in this Table; or

(b) the soil type is not described in this Table.

Figure 3.2.1a: Site cut and fill using un-retained embankments — Site cut commencing at the allotment boundary or affecting an adjoining property

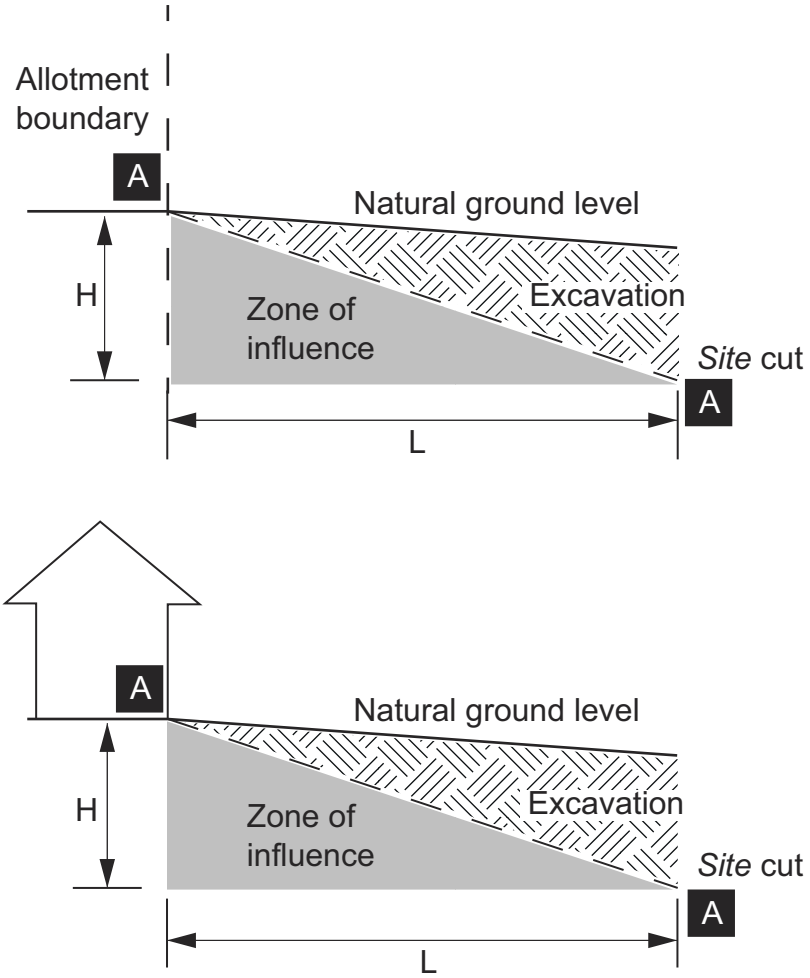

Figure Notes

(1) The angle for line A-A is defined as the maximum embankment slope ratio H:L in Table 3.2.1 and is taken from the bottom of the footing and identifies the area suitable for excavation.

(2) Consideration must be given for drainage of *surface water*, particularly where fill affects an adjoining property.

Figure 3.2.1b: Site cut and fill using un-retained embankments — Fill commencing at the allotment boundary or affecting an adjoining property

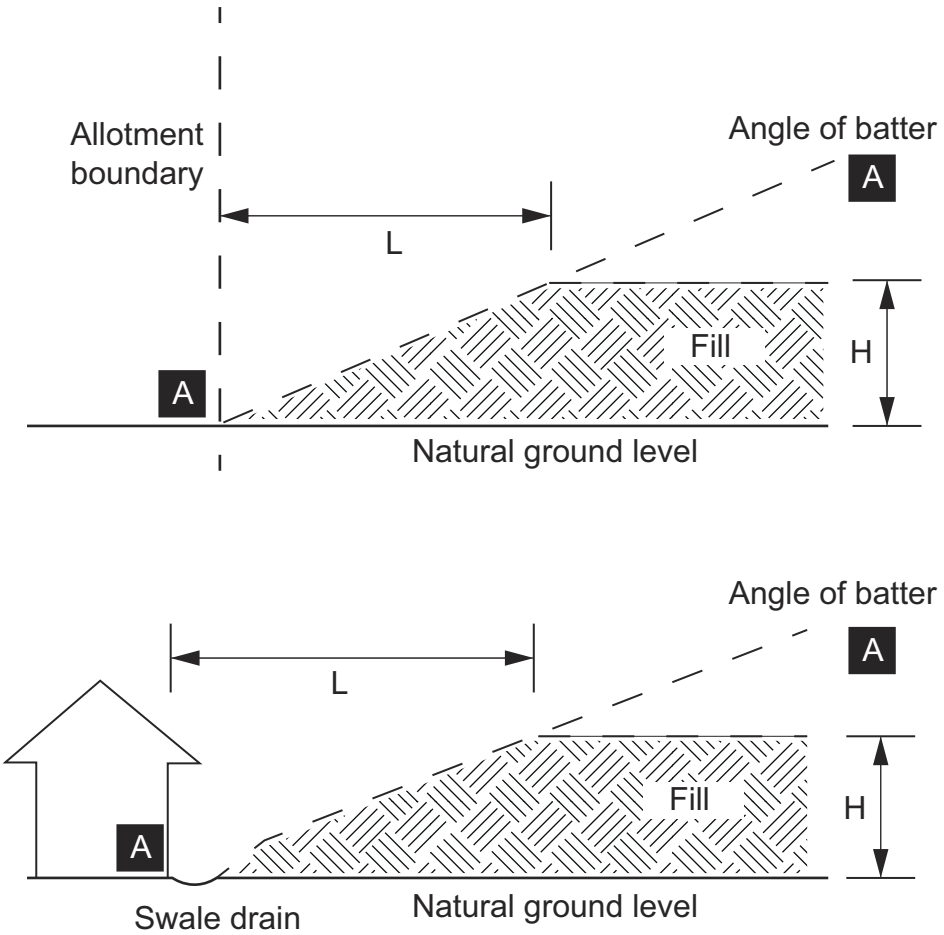

Figure Notes

(1) The angle for line A-A is defined as the maximum embankment slope ratio H:L in Table 3.2.1 and is taken from the bottom of the footing and identifies the area suitable for fill.

(2) Consideration must be given for drainage of *surface water*, particularly where fill affects an adjoining property.

Part 3.3 Drainage

3.3.1 Application

[New for 2022]

(1) Part 3.3 is subject to the limitations set out in H2D2(b).

(2) Part 3.3 need not be complied with if H2D2(a) is complied with.

3.3.2 Drainage requirements

[2019: 3.1.3.2]

Drainage systems must be installed as follows:

(a) Areas adjoining and under buildings — *surface water* drainage in accordance with 3.3.3; and

(b) Where *site* conditions exist that create a need for subsoil water to be diverted away from footings, basements, retaining walls etc — sub-soil drainage in accordance with 3.3.4; and

(c) Where underground drainage from roof areas is *required* or permitted — underground stormwater drainage in accordance with 3.3.5; and

(d) Excavation for drains adjacent to existing footings must be within the area described in Figure 3.3.2 as being safe for excavation.

Figure 3.3.2: Excavation for drains adjacent to footings

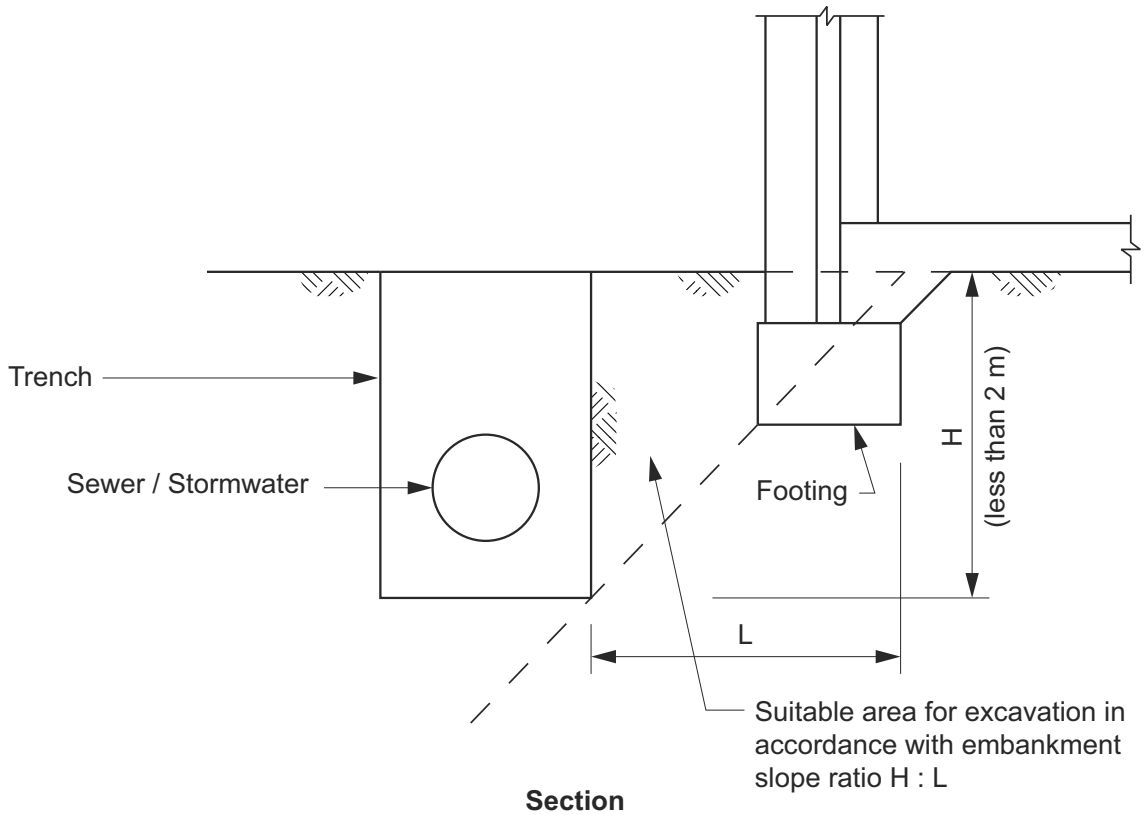

Section

Figure Notes

(1) Any excavation below the area defined as being safe for excavation will need additional protection measures to be determined by appropriately qualified persons.

(2) Slope ratio H:L is determined using Table 3.2.1.

3.3.3 Surface water drainage

[2019: 3.1.3.3]

Surface water must be diverted away from a Class 1 building as follows:

(a) Slab-on-ground — finished ground level adjacent to a building: the external finished surface surrounding the slab must be drained to move *surface water* away from the building and graded to give a slope of not less than (see Figure 3.3.3a) —

(i) 25 mm over the first 1 m from the building—

(A) in *low rainfall intensity areas* for surfaces that are reasonably impermeable (such as concrete or clay paving); or

(B) for any reasonably impermeable surface that forms part of an access path or ramp provided for the purposes of Clauses 1.1(2) or (4)(c) of the ABCB Standard for Livable Housing Design; or

(ii) 50 mm over the first 1 m from the building in any other case.

(b) Slab-on-ground — finished slab heights: the height of the slab-on-ground above external finished surfaces must be not less than (see Figure 3.3.3a) —

(i) 100 mm above the finished ground level in *low rainfall intensity areas* or sandy, well-drained areas; or

(ii) 50 mm above impermeable (paved or concrete) areas that slope away from the building in accordance with (a); or

(iii) 150 mm in any other case.

(c) The ground beneath suspended floors must be graded so that the area beneath the building is above the adjacent external finished ground level and *surface water* is prevented from ponding under the building (see Figure 3.3.3b).

Limitations

3.3.3 does not apply to a landing area provided for the purposes of Clause 2.3 of the ABCB Standard for Livable Housing Design, except for a channel drain or drainage surface provided under Clause 2.4 of that standard.

Figure 3.3.3a: Site surface drainage

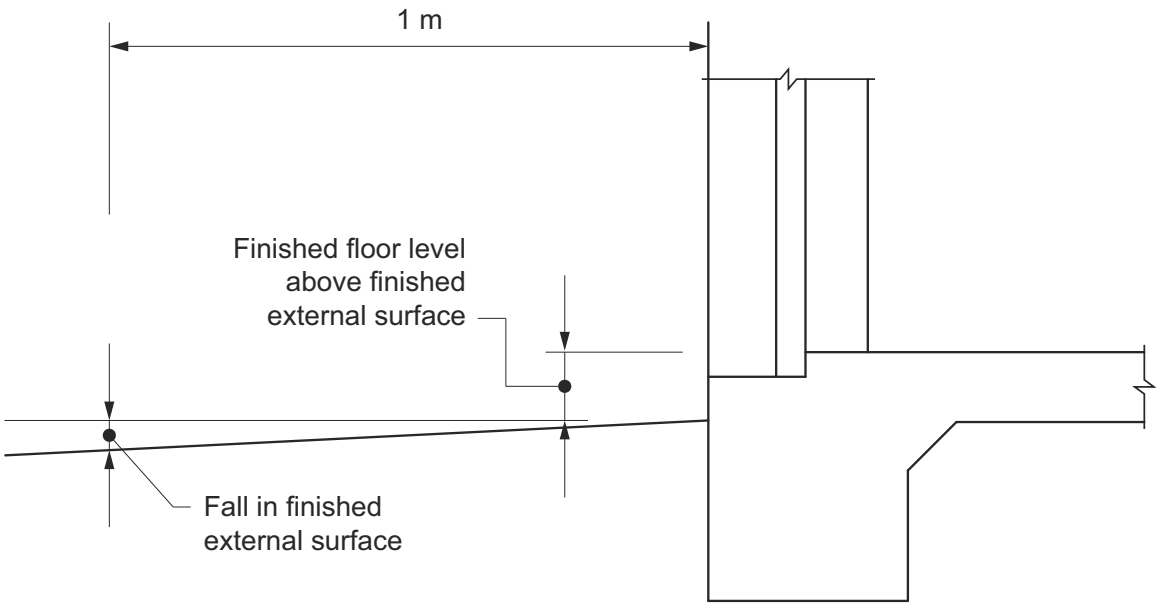

Elevation

Figure Notes

(1) For fall in finished external surface, see 3.3.3(a).

(2) For finished floor level above finished external surface, see 3.3.3(b).

Figure 3.3.3b: Grading of ground under suspended floors

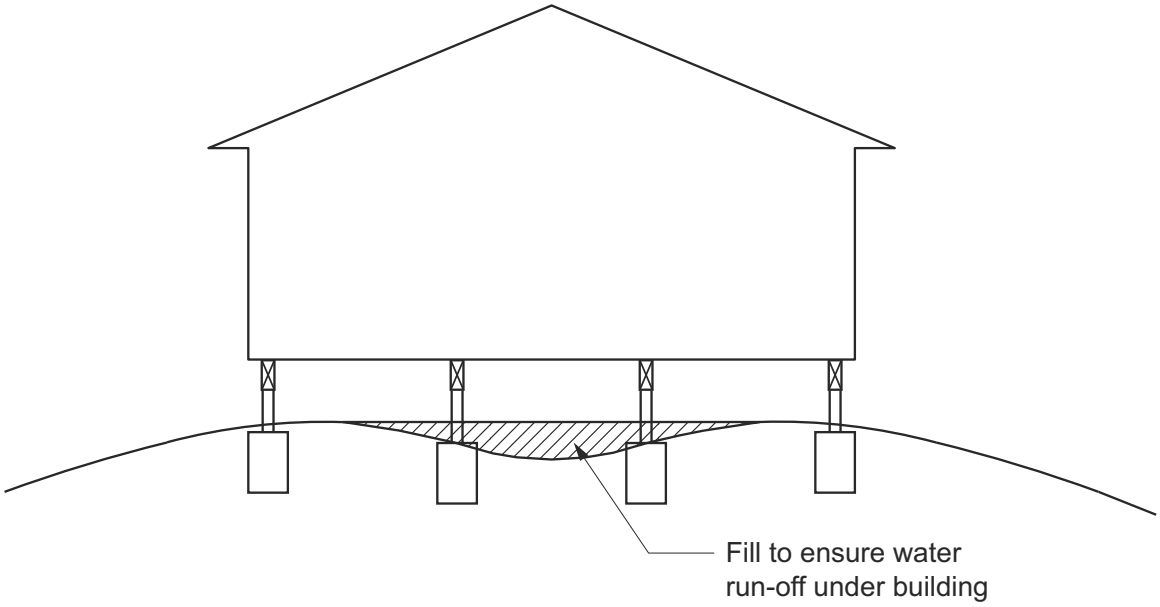

Section

Explanatory Information

The appropriate slab height above finished ground level and the slope of the external finished surface surrounding the slab may vary depending on the following:

- The local plumbing requirements; in particular the height of the overflow relief gully relative to *drainage* fittings and ground level (to work effectively they must be a minimum of 150 mm below the lowest sanitary fixture).
- The run-off from storms, particularly in areas of high rainfall intensity, and the local topography.
- The effect of excavation on a cut and fill *site*.
- The possibility of flooding.
- Termite risk management provisions.

Clearances between wall cladding and the finished ground level are provided in 7.5.7.

3.3.4 Subsoil drainage

[2019: 3.1.3.4]

Where a subsoil drainage system is installed to divert subsurface water away from the area beneath a building, the subsoil drain must—

(a) be graded with a uniform fall of not less than 1:300; and

(b) discharge into an external silt pit or sump with—

(i) the level of discharge from the silt pit or sump into an impervious drainage line not less than 50 mm below the invert level of the inlet (see Figure 3.3.4); and

(ii) provision for cleaning and maintenance.

Figure 3.3.4: Construction of silt pits

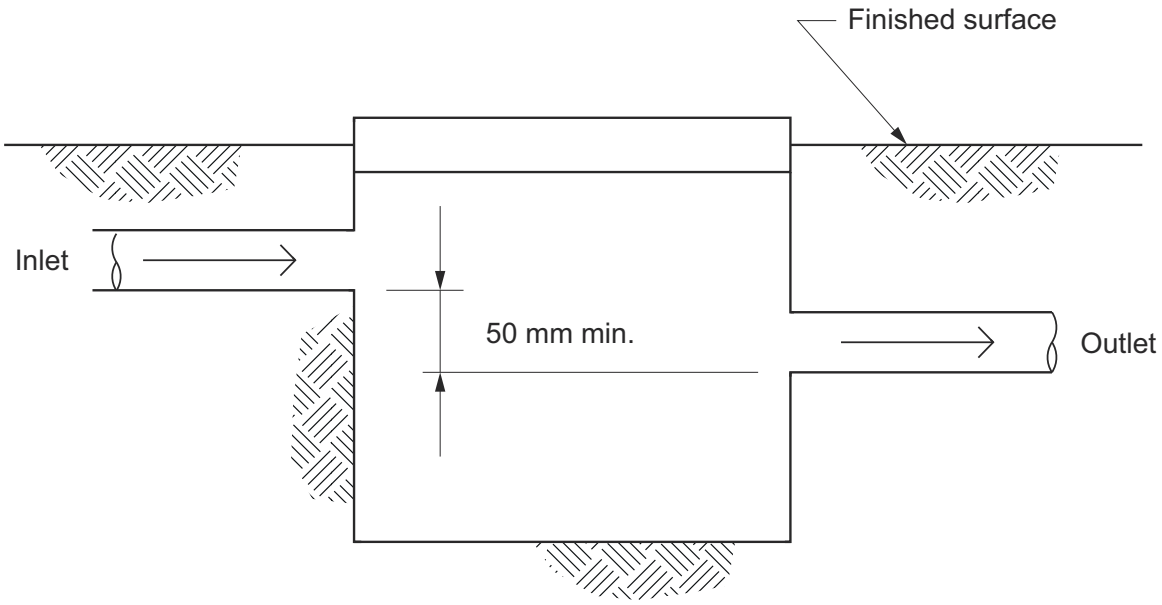

Explanatory Information

Subsoil drainage systems may need to be installed where subsurface water movement could damage buildings or cause loss of amenity through the build up of excessive moisture or lateral water pressure. Typical locations of subsoil drainage systems are on the uphill side of cut and fill sites, adjacent to deep footings, behind retaining walls and adjacent to basement walls.

The design and installation of subsoil drainage systems should take into account the nature of the soil and the anticipated water level, quantity and movement. In some cases, detailed investigations involving excavations, field observations and soil tests may be necessary to determine the appropriate solution. Typical subsoil drain configurations are shown in Figure 3.3.4 (explanatory).

In clay soil, subsoil drains can alter the long-term moisture content in the soil, adversely affecting the building *foundation* by removing or, in some cases, introducing water. In such conditions, subsoil drains should only be used where there are no other options for dealing with subsoil water.

Additional guidance on subsoil drainage systems can be found in AS/NZS 3500.3 and AS 2870.

Figure 3.3.4 (explanatory): Typical subsoil drain configurations

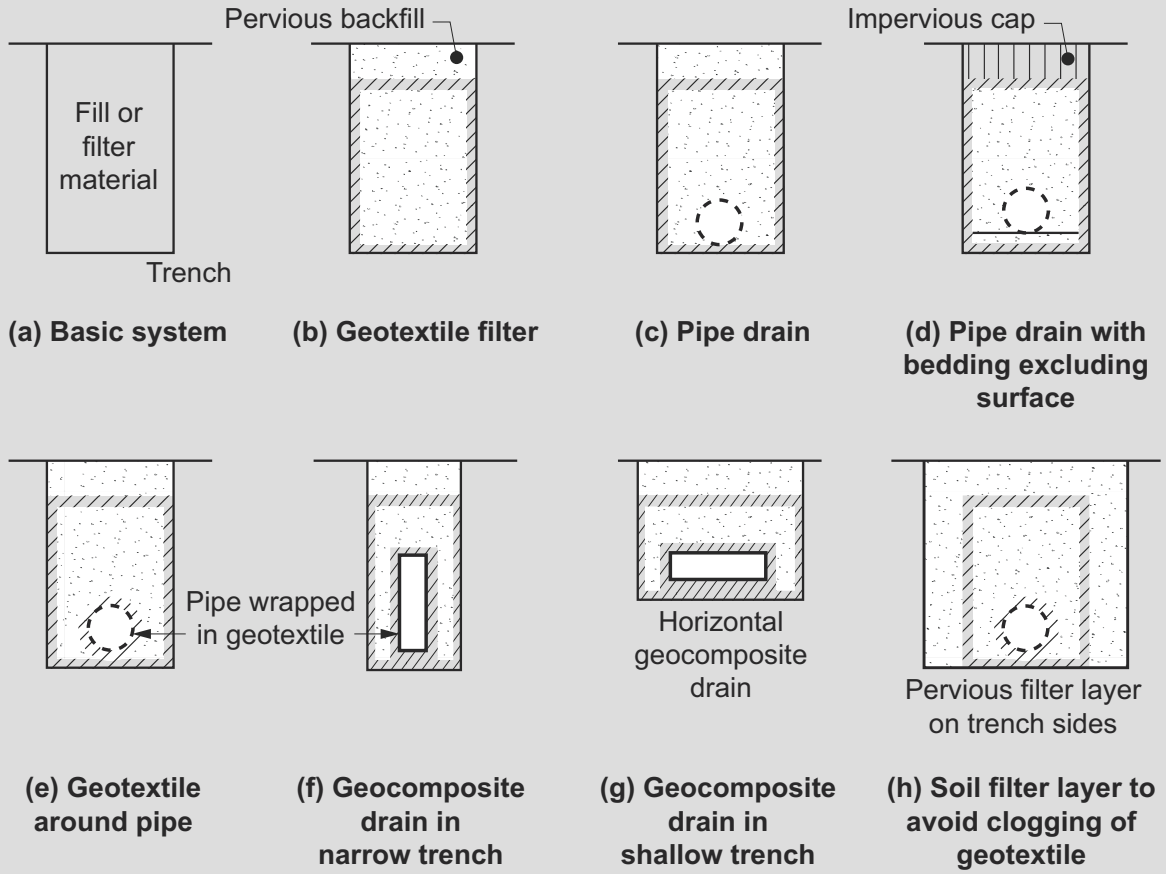

3.3.5 Stormwater drainage

[2019: 3.1.3.5]

Where a stormwater *drainage* system is installed, it must comply with the following:

(a) The position and manner of discharge of the stormwater *drainage* system must be to the satisfaction of the *appropriate authority*.

(b) The stormwater *drainage* system must be designed so that any overflow during heavy rain periods is prevented from flowing back into the building.

(c) Cover to stormwater drains: the cover to 90 mm Class 6 UPVC stormwater drains installed underground must be not less than—

(i) under soil — 100 mm; or

(ii) under paved or concrete areas — 50 mm; or

(iii) under areas subject to light vehicle traffic—

(A) reinforced concrete — 75 mm; or

(B) paved — 100 mm.

Explanatory Information: Discharge points

The manner of discharge of stormwater drainage systems includes consideration of discharge points. Some examples of discharge points which may be acceptable to the *appropriate authority* are—

- a legal discharge point at the allotment boundary; or
- on-site catchment systems, such as stormwater tanks; or
- on-site soil *drainage* systems, such as soaker wells.

Explanatory Information: Depth of cover

Different depths of soil cover (or no cover at all) can be achieved using other types of pipes. The cover specified is measured from the top of the pipe to either the finished ground level or, in the case of paved or concreted areas, to the underside of the paving or concrete.

Part 3.4 Termite risk management

3.4.1 Requirements for termite management systems

[2019: 3.1.4.2]

(1) The requirements of this Part apply where:

(a) a Class 1 or 10 building is constructed in an area where subterranean termites are known to present a potential risk of attack; and

(b) a *primary building element* of a Class 1 or 10 building is considered susceptible to termite attack.

NT 3.4.1(2)

(2) For the purposes of (1), a *primary building element* consisting entirely of, or a combination of, any of the following materials is considered not subject to termite attack:

(a) Steel, aluminium or other metals.

(b) Concrete.

(c) Masonry.

(d) Fibre-reinforced cement.

(e) Timber — naturally termite resistant in accordance with Appendix C of AS 3660.1.

(f) Timber — preservative treated in accordance with Appendix D of AS 3660.1.

QLD 3.4.1(3)

QLD 3.4.1(4)

QLD 3.4.1(5)

QLD 3.4.1(6)

Explanatory Information

- 3.4.1(1): Termites are not considered to be a risk in Tasmania and a lesser risk in parts of Victoria. The *appropriate authority* may have records of termite activity for each area and may be able to advise on whether termite risk management is needed.
- 3.4.1(2): Where individual *primary building elements* are susceptible to termite attack and the remainder of the *primary building elements* are constructed of termite resistant materials, only the susceptible elements need to be provided with a termite management system.
- 3.4.1(2)(c): states that masonry is not subject to termite attack, however termites may gain entry through mortar and other joints.
- Explanatory Figure 3.4.1 provides a flowchart for identifying if a termite management system is *required*.

Figure 3.4.1 (explanatory): Flow chart for identifying if a termite management system is required

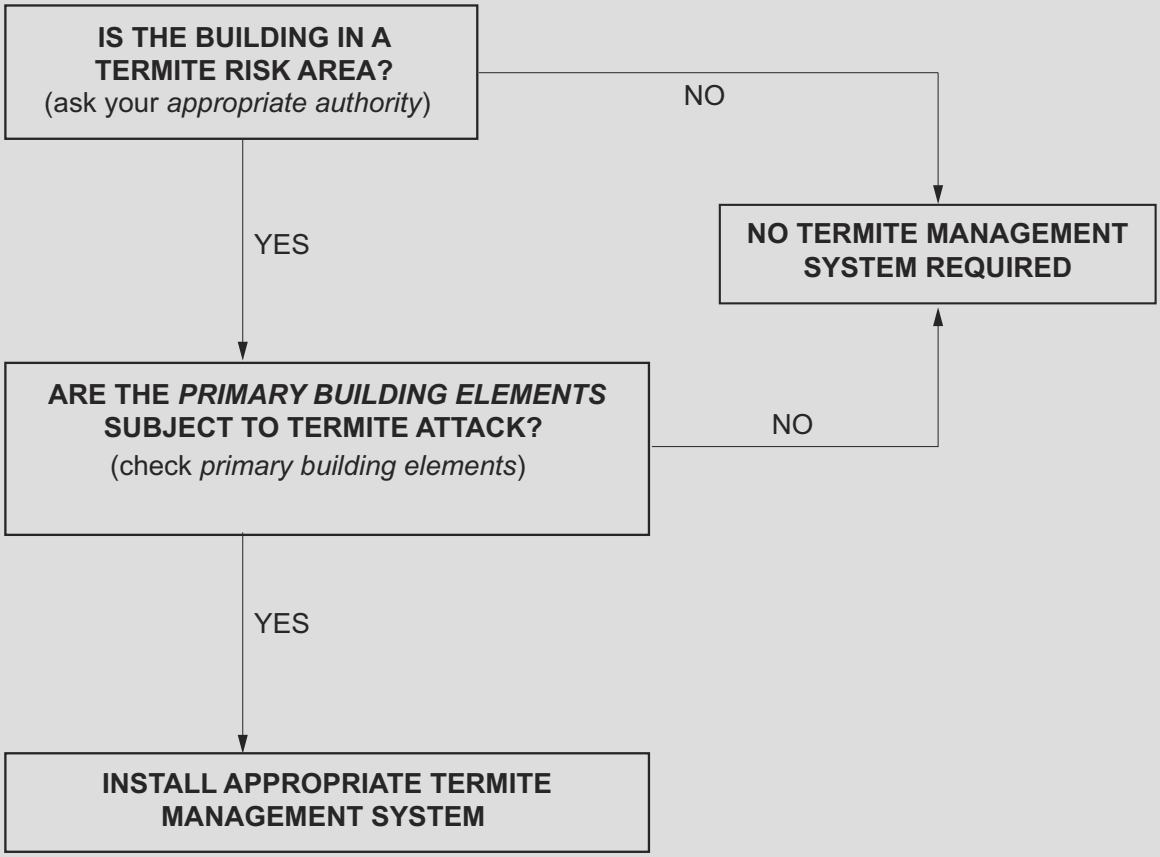

Figure Notes

To check *primary building elements*, see 3.4.1(2).

NT 3.4.2

QLD 3.4.2

3.4.2 Termite management systems

[2019: 3.1.4.3]

Where a termite management system is required it must—

(a) be selected appropriate to Table 3.4.2; and

(b) comply with—

(i) AS 3660.1; or

(ii) have been tested and passed the tests *required* by Section 5 of AS 3660.3; and

(c) have a durable notice installed in accordance with 3.4.3; and

(d) where a chemical termite management system is used, the chemical must be included on the *appropriate authority's* pesticides register.

Table 3.4.2: Acceptable termite management systems and components

Building element	Termite management system or component options
Concrete slab-on-ground: slab perimeter or *external wall* perimeter	Slab edge exposure
	Sheet material
	Granular material
	Chemical

Building element	Termite management system or component options
Concrete slab-on-ground: penetrations/control joints/area beneath the slab (see Note)	Sheet material
	Granular material
	Chemical
Suspended floors	Sheet material
	Granular material
	Chemical
Attachments to buildings	Termite management system to the attachment
	Inspection zone between attachment and building

Table Notes

The entire area beneath the slab must be treated when the slab-on-ground is not designed and constructed in accordance with AS 2870 or AS 3600.

Explanatory Information: Validity of test results

3.4.2(b)(ii) provides the option of having a chemical termite management system tested to AS 3660.3. In order for the test results to remain valid, the system would then have to be installed as tested.

Explanatory Information: Component

A component of a system as referred to in Table 3.4.2 is one that, when used in combination with other components, will form a 'full system'.

For example, if a concrete slab is used as a component of a system, it in itself will not provide a complete termite management system. Depending on the construction methods and the *site* conditions, additional requirements will be necessary for service penetrations through the concrete slab. Each of these are 'components', when integrated, will form a 'full system'.

Explanatory Information: Integrity of the termite management system

There are more than 350 species of termites in Australia, about 30 of which achieve economic importance by causing costly damage to building structures. Due to the nature of termites, it is extremely difficult to prevent them gaining access to a building.

In addition to correct installation of a termite management system, its effectiveness will rely on regular maintenance and competent inspection.

Explanatory Information: Attachments to buildings

Attachments referred to in Table 3.4.2 include downpipes, service pipes, steps, verandahs, porches, access ramps, carports, trellises, decks, *heated water* systems, air-conditioners and the like.

3.4.3 Durable notice

[2019: 3.1.4.4]

A durable notice must be permanently fixed to the building in a prominent location, such as in a meter box or the like, indicating—

(a) the termite management system used; and

(b) the date of installation of the system; and

(c) where a chemical is used, its life expectancy as listed on the *appropriate authority's* register label; and

(d) the installer's or manufacturer's recommendations for the scope and frequency of future inspections for termite activity.

Explanatory Information: Appropriate authority

For the purpose of the pesticides register, the *appropriate authority* is the government body responsible for the registration of pesticides. Currently, the Australian Pesticides and Veterinary Medicines Authority (APMVA) coordinates the registration scheme.

Explanatory Information: Durable notice

Where a durable notice is *required* by 3.4.3, it must be fixed to the building in a prominent location advising the building occupants that the system should be inspected and maintained.

The notice should be clearly written, on a material that will not deteriorate or fade over time and be located in or near the electrical meter box or similar location so that it can be easily seen and read by future owners of the building. Additional information may be included if desired by the person placing the notice.

4 Footings and slabs

Part 4.1 **Scope and application of Section 4**

4.1.1 Scope
4.1.2 Application
4.1.3 Explanation of terms

Part 4.2 **Footings, slabs and associated elements**

4.2.1 Application
4.2.2 Site classification
4.2.3 Excavation for footings
4.2.4 Filling under concrete slabs
4.2.5 Foundations for footings and slabs
4.2.6 Slab edge support on sloping sites
4.2.7 Stepped footings
4.2.8 Vapour barriers
4.2.9 Edge rebates
4.2.10 Concrete
4.2.11 Steel reinforcement
4.2.12 Footing and slab construction
4.2.13 Stump footing details
4.2.14 Stiffened rafts Class A, S and M sites
4.2.15 Strip footings Class A, S and M sites
4.2.16 Footing slabs for Class A sites
4.2.17 Footings for single leaf masonry, mixed construction and earth wall construction
4.2.18 Footings for fireplaces on Class A and S sites
4.2.19 Shrinkage control
4.2.20 Concentrated loads
4.2.21 Minimum edge beam dimensions
4.2.22 Recessed areas of slabs

Part 4.1 Scope and application of Section 4

4.1.1 Scope

[New for 2022]

This Section sets out the *Deemed-to-Satisfy Provisions* for footings and slabs.

Explanatory Information

This Section specifies the requirements for the excavation and filling for the footing or slab together with the construction of various alternative concrete slab and footing configurations. The slab and footing configurations detailed in this Section are only suitable for the specified soil classifications. The requirements contained in the remainder of this Section are more general and may be applied to all slab and footing construction.

The requirements of this Section are to be read in conjunction with Part 6.2. The Part 6.2 subfloor ventilation requirements apply to the subfloor space of all suspended floors of a building or deck, including but not limited to, timber and steel-framed subfloors and suspended concrete slabs.

4.1.2 Application

[New for 2022]

The application of this Section is subject to the following:

(a) The Governing Requirements of NCC 2022 Volume Two.

(b) Any conditions set out within the following *Deemed-to-Satisfy Provisions* of NCC Volume Two: H1D4(2), for footings and slabs.

(c) The State and Territory variations, additions and deletions contained in the Schedules to the ABCB Housing Provisions and NCC Volume Two.

Explanatory Information

In NCC 2019, the content of Section 4 of the ABCB Housing Provisions (other than content added in NCC 2022 or later) was contained in the acceptable construction practices for Part 3.2 of NCC 2019 Volume Two.

4.1.3 Explanation of terms

[New for 2022]

Figures 4.1.3a, 4.1.3b and 4.1.3c depict footing and slab members and associated terminology used to describe them in Part 4.2 of the ABCB Housing Provisions.

Figure 4.1.3a: Footing and slab members and associated terminology: diagram 1

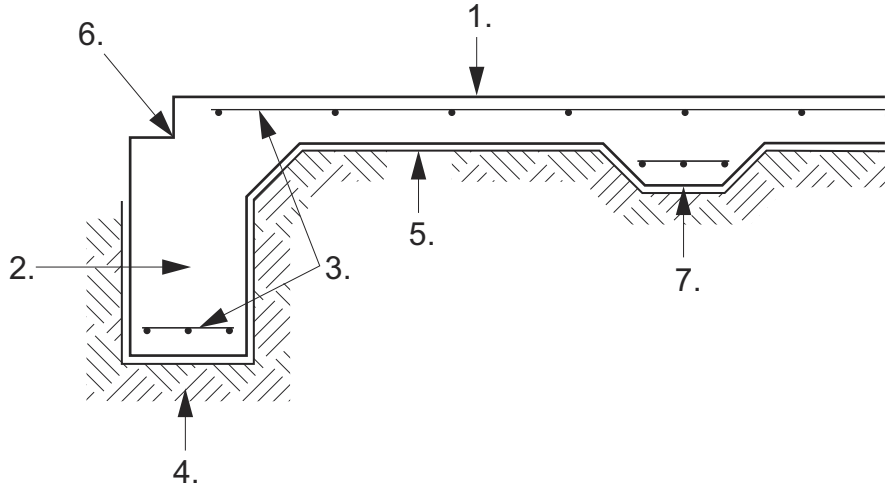

Figure Notes

(1) Slab (monolithic).

(2) Deepened edge beam.

(3) Reinforcement.

(4) *Foundation*.

(5) Vapour barrier/damp-proofing *membrane*.

(6) Edge rebate.

(7) Internal beam (thickening).

Figure 4.1.3b: Footing and slab members and associated terminology: diagram 2

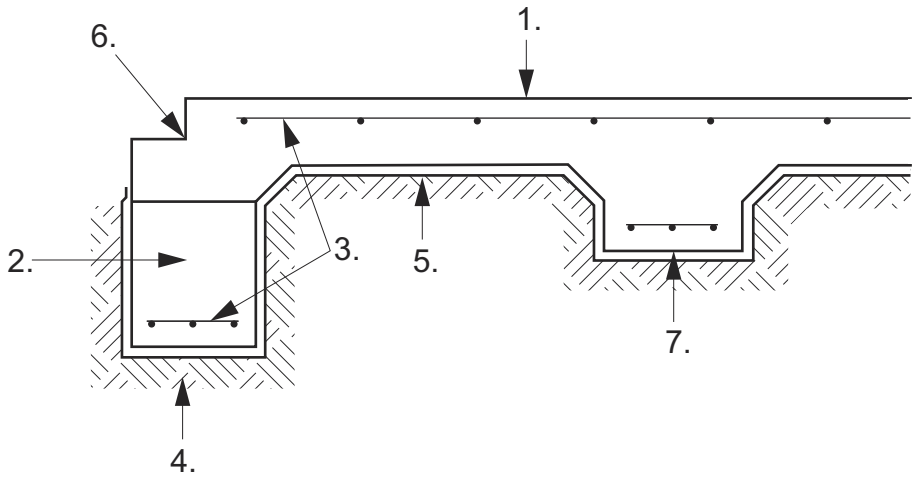

Figure Notes

(1) Slab.

(2) Deepened edge beam and slab.

(3) Reinforcement.

(4) *Foundation*.

(5) Vapour barrier/damp-proofing *membrane*.

(6) Edge rebate.

(7) Internal beam (thickening).

Figure 4.1.3c: Footing and slab members and associated terminology: diagram 3

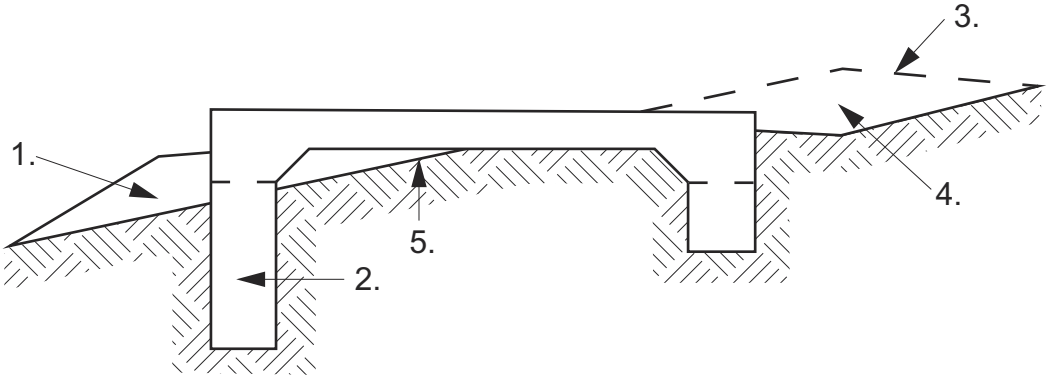

Figure Notes

(1) *Controlled fill*.

(2) Deepened edge beam and slab.

(3) Natural ground line above cut.

(4) Cut.

(5) *Foundation* (natural ground below fill).

Part 4.2 Footings, slabs and associated elements

4.2.1 Application

[New for 2022]

Part 4.2 is subject to the limitations set out in H1D4(2).

4.2.2 Site classification

[2019: 3.2.4.1]

The *foundations* where footings and slabs are to be located must be classified in accordance with AS 2870.

Explanatory Information

Explanatory Table 4.2.2 provides a general description of *foundation* soil types that will assist in the classification of a *site*. More detailed information, including differentiation between classifications, can be found in AS 2870 or alternatively contact the *appropriate authority*.

Due to the limitations of this Part, if a *site* is classified H, E or P then reference must be made to AS 2870 for design and construction information.

Table 4.2.2 (explanatory): General definition of site classes

Class	*Foundation*
A	Most sand and rock *sites* with little or no ground movement from moisture changes
S	Slightly reactive clay *sites* with only slight ground movement from moisture changes
M	Moderately reactive clay or silt *sites* which can experience moderate ground movement from moisture changes
H	Highly reactive clay *sites* which can experience high ground movement from moisture changes
E	Extremely reactive clay *sites* which can experience extreme ground movement from moisture changes
A to P	Filled *sites* — see AS 2870
P	*Sites* which include soft soils, such as soft clay or silt or loose sands; landslip; mine subsidence; collapsing soils; soils subject to erosion; reactive *sites* subject to abnormal moisture conditions or *sites* which cannot be classified otherwise.

Table Notes

(1) For Class M, further division based on the depth of expected movement is *required*.

(2) For deep-seated movement, characteristic of dry climates and corresponding to a design depth of suction change H_S, equal to or greater than 3 m, the classification must be M-D.

(3) If classification M-D is established due to further division, design of footings and slabs is beyond the scope of the ABCB Housing Provisions and reference must be made to AS 2870 for design and construction information.

NSW 4.2.3

4.2.3 Excavation for footings

[2019: 3.2.2.1]

(1) Excavation for footings, including thickenings for slabs and pads must be clean cut with vertical sides, wherever possible.

(2) The base of the excavation must be—

(a) for flat *sites*, generally level but may slope not more than 1:40 to allow excavations to drain; and

(b) for sloping *sites* at an angle of not more than 1:10; and

(c) for stepped footings in accordance with 4.2.7.

(3) Footing excavations must be free of loose earth, tree roots, mud or debris.

(4) Topsoil containing grass roots must be removed from the *site* of the *foundation*.

(5) Excavation depths and soil cuts must comply with Part 3.2.

(6) On loose sand *sites* or *sites* subject to wind or water erosion, the depth below *finished ground level* to the bottom of footings must be not less than 300 mm.

(7) The height of a finished slab-on-ground must be in accordance with 3.3.3(b).

4.2.4 Filling under concrete slabs

[2019: 3.2.2.2]

Filling placed under a slab (except where the slab is suspended) must comply with the following:

(a) Filling must be either *controlled fill* or *rolled fill* as follows:

(i) Sand used in *controlled fill* or *rolled fill* must not contain any gravel size material and achieve a blow count of 7 or more per 300 mm using the test method described in AS 1289.6.3.3.

(ii) Clay used in *controlled fill* or *rolled fill* must be moist during compaction.

(iii) *Controlled fill*:

(A) Sand fill up to 800 mm deep — well compacted in layers not more than 300 mm deep by vibrating plate or vibrating roller.

(B) Clay fill up to 400 mm deep — well compacted in layers of not more than 150 mm by a mechanical roller.

(iv) *Rolled fill*:

(A) Sand fill up to 600 mm deep — compacted in layers of not more than 300 mm by repeated rolling by an excavator or other suitable mechanical equipment.

(B) Clay fill up to 300 mm deep — compacted in layers of not more than 150 mm by repeated rolling by an excavator or similar machine.

(b) A level layer of clean quarry sand must be placed on top of the fill, with a depth of not less than 20 mm.

(c) A graded stone termite management system complying with Part 3.4 may be substituted for the sand *required* in (b).

4.2.5 Foundations for footings and slabs

[2019: 3.2.2.3]

Footings and slabs, including internal and edge beams, must be founded on soil with an allowable bearing pressure as follows:

(a) Slab panels, load support panels and internal beams — natural soil with an allowable bearing pressure of not less than 50 kPa or *controlled fill* or *rolled fill* compacted in accordance with 4.2.4.

(b) Edge beams connected to the slab — natural soil with an allowable bearing pressure of not less than 50 kPa or *controlled fill* compacted in accordance with 4.2.4(a)(iii) and extending past the perimeter of the building 1 m

with a slope ratio not steeper than 2 horizontal to 1 vertical (see Figure 4.2.5).

(c) Pad footings, strip footings and edge beams not connected to the slab, must be—

(i) founded in natural soil with an allowable bearing pressure of not less than 100 kPa; or

(ii) for Class A and S sites they may be founded on controlled sand fill in accordance with 4.2.4(a).

Figure 4.2.5: Foundations for footings and slabs

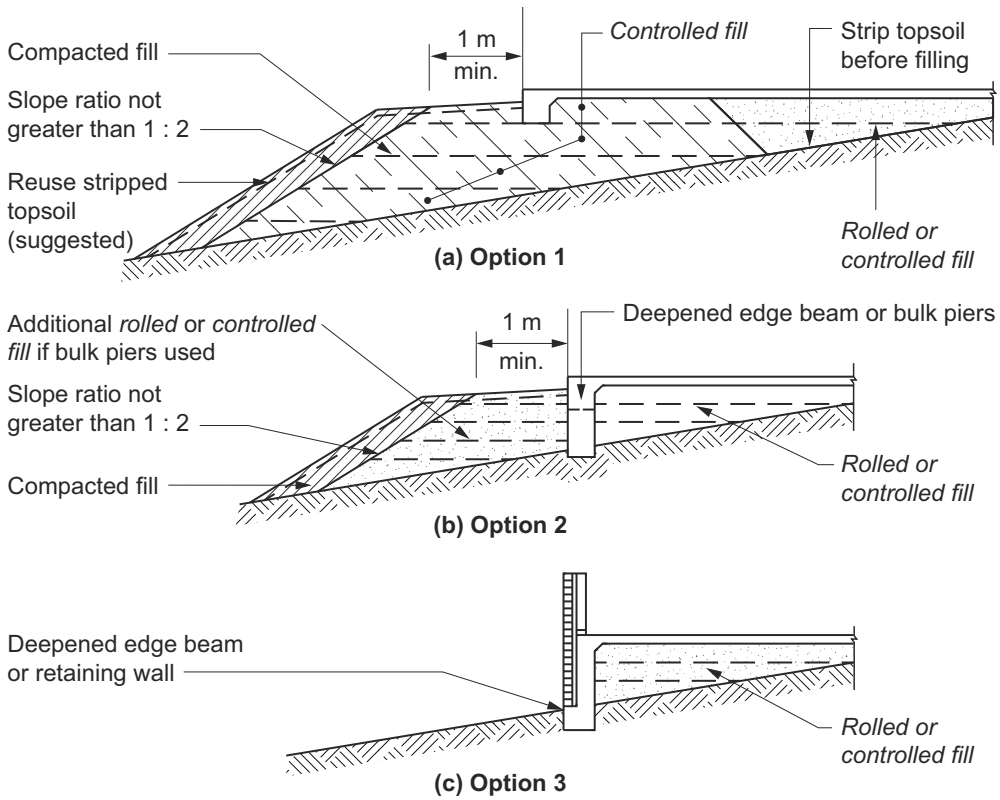

Figure Notes

Compacted fill must be in accordance with 4.2.4.

Explanatory Information

The *foundations* of a building are critical to its successful performance. As such, the soil must have the strength or bearing capacity to carry the building load with minimum movement.

The bearing capacity of a soil varies considerably and needs to be determined on a *site* by *site* basis. For this to occur, the appropriate people need to be consulted. These people may include a qualified engineer or experienced engineering geologist, or it may be determined by a person with appropriate local knowledge. The minimum bearing capacity (soil strength rating) may depend on the *site* conditions. The soil may be naturally undisturbed or be disturbed by building work or the like. Where soil is disturbed by building work and the like, the bearing capacity can be dramatically altered. This is typically the case for sloping *sites* where cut and fill procedures are used. In these situations the soil needs to be consolidated, generally via compaction, to achieve the *required* bearing capacity.

There are a number of alternatives for working on cut and filled *sites*. These are described in Figure 4.2.5.

Option 1 of Figure 4.2.5 refers to the *controlled fill* process which involves the compaction of fill in layers to achieve the bearing capacity described in 4.2.5. The depth of fill for each layer is specified to ensure effective compaction. Fill beyond these depths will need to be installed in accordance with H1D4(1).

Option 2 and 3 of Figure 4.2.5 refer to edge beams that extend through the fill into undisturbed soil which provides the 4.2.5 *required* bearing capacity. In this situation the fill is essentially only taking the internal slab loads.

4.2.6 Slab edge support on sloping sites

[2019: 3.2.2.4]

Footings and slabs installed on the low side of sloping *sites* must be as follows:

(a) Slab panels — in accordance with 4.2.5(a).

(b) Edge beams—

(i) supported by *controlled fill* in accordance with 4.2.5(b) (see Figure 4.2.5, Option 1); or

(ii) supported by deepened edge beams or bulk piers designed in accordance with AS 3600 (see Figure 4.2.5, Option 2); or

(iii) deepened (as per AS 2870) to extend into the natural soil level with a bearing capacity in accordance with 4.2.5(b) (see Figure 4.2.5, Option 3); or

(iv) stepped in accordance with AS 2870.

(c) Edge beams not connected to the slab, pad footings and strip footings — founded in accordance with 4.2.5(c).

(d) Where an excavation (cut) of the natural ground is used it must be in accordance with Part 3.2.

4.2.7 Stepped footings

[2019: 3.2.2.5]

Stepped strip footings must—

(a) have a base that is horizontal or be sloped at not more than 1:10; or

(b) be stepped in accordance with one of the methods shown in Figure 4.2.7.

Figure 4.2.7: Stepped strip footings

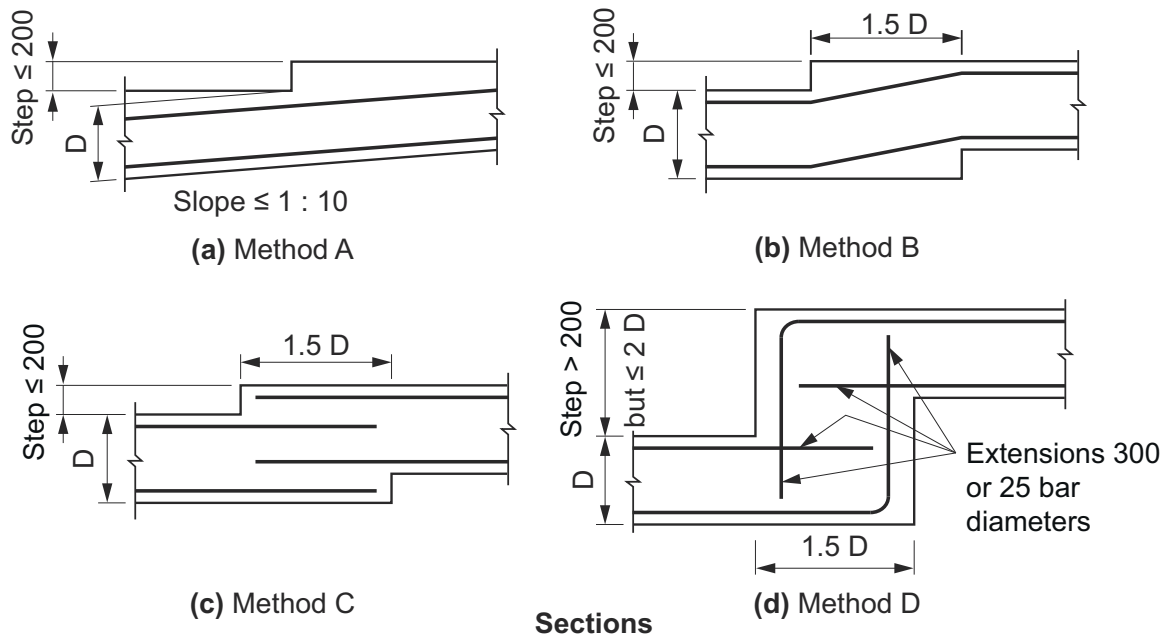

Figure Notes

All dimensions in millimetres.

NSW 4.2.8

SA 4.2.8

4.2.8 Vapour barriers

[2019: 3.2.2.6]

(1) A vapour barrier must be installed under slab-on-ground construction for a Class 1 building and for a Class 10 building where the slab is continuous with the slab of a Class 1 building in accordance with (2), (3), (4) and (5).

(2) Materials: A vapour barrier must be—

(a) 0.2 mm nominal thickness polyethylene film; and

(b) medium impact resistant,

determined in accordance with criteria specified in clause 5.3.3.3 of AS 2870.

(3) A vapour barrier must be branded continuously “AS 2870 Concrete underlay, 0.2 mm Medium impact resistance”.

(4) Installation: A vapour barrier must be installed as follows:

(a) Lap not less than 200 mm at all joints.

(b) Tape or seal with a close-fitting sleeve around all service penetrations.

(c) Fully seal where punctured (unless for service penetrations) with additional polyethylene film and tape.

(5) The vapour barrier must be placed beneath the slab so that the bottom surface of the slab is entirely underlaid and must extend under internal and edge beams to finish at ground level in accordance with Figure 4.2.8.

Figure 4.2.8: Acceptable vapour barrier and damp-proofing membrane location

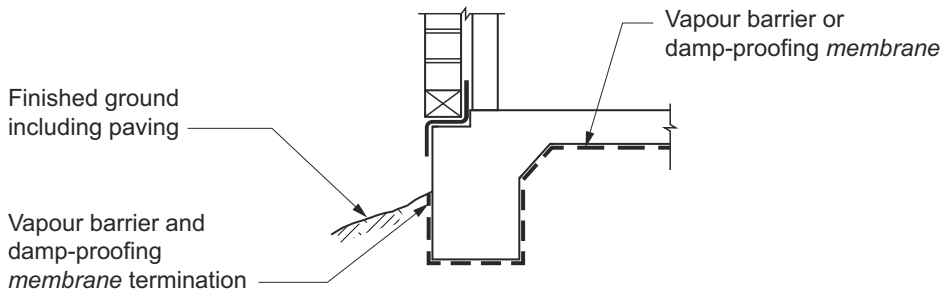

(a) Minimum rebate for cavity masonry or veneer wall

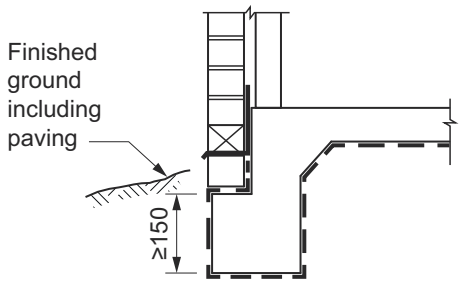

(b) Deep edge rebate alternative

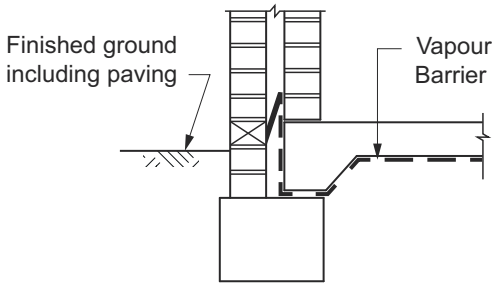

(c) Masonry alternative

Figure Notes

All dimensions in millimetres.

4.2.9 Edge rebates

[2019: 3.2.2.7]

Edge rebates for slab-on-ground and stiffened raft with masonry *cavity* or veneer construction must comply with the following:

(a) The rebate must not be less than 20 mm.

(b) The edge rebate must be flashed and drained in accordance with H2D4 and where it cannot be flashed, it must be filled with mortar.

Explanatory Information

See 4.2.21 for minimum edge beam details. For single skin or framed walls with external cladding, rebates are not required.

SA 4.2.10

4.2.10 Concrete

[2019: 3.2.3.1]

Concrete must comply with the following:

(a) Concrete must comply with AS 3600; and—

(i) have a strength at 28 days of not less than 20 MPa (denoted as N20 grade); and

(ii) have a 20 mm maximum nominal aggregate size; and

(iii) have a nominal 100 mm slump.

(b) Water must not be added to the mix to increase the slump to a value in excess of that specified.

(c) Concrete must be placed, compacted and cured in accordance with good building practice.

Explanatory Information

- Complete discharge of the concrete from the truck should be made within one and a half hours of initial mixing with water unless a suitable retarder has been specified.
- Compacting concrete by vibration removes air pockets and works the concrete thoroughly around reinforcement, service penetrations etc. and into corners of formwork to increase durability and resistance to termite infestation and salt damp attack. Care should be taken not to over-vibrate. The finishing and curing of slab edges provides an improved edge finish which is resistant to edge dampness.
- Care should be taken when using chemical curing methods, because some products may not be compatible with adhesives used to fix surface finishes to the slab.

4.2.11 Steel reinforcement

[2019: 3.2.3.2]

(1) Materials used for reinforcing steel must comply with AS 2870 and be—

(a) welded wire reinforcing fabric; or

(b) trench mesh; or

(c) steel reinforcing bars.

(2) Steel reinforcing bars may be substituted for trench mesh in accordance with Table 4.2.11a.

(3) Minimum laps for reinforcement as shown in Table 4.2.11b and Figure 4.2.11a must be provided where reinforcing is used.

(4) Any slab in H1D4 with a re-entrant corner must have—

(a) two strips of 3-L8TM; or

(b) one strip of 3-L11TM; or

(c) 3-N12 bars,

not less than 2 m in length and placed at an angle of 45° across the corner such that the centre of the 2 m length is at the location of the internal angle of the slab in accordance with Figure 4.2.11b.

(5) Footings and slabs-on-ground must have concrete cover between the outermost edge of the reinforcement (including ligatures, tie wire etc.) and the surface of the concrete of not less than—

(a) 40 mm to unprotected ground; and

(b) 30 mm to a membrane in contact with the ground; and

(c) 20 mm to an internal surface; and

(d) 40 mm to external exposure.

(6) Reinforcement must be free of loose rust, mud, paints and oils.

(7) Reinforcement must be placed as follows:

(a) All reinforcement must be firmly fixed in place to prevent it moving during concreting operations.

(b) Reinforcement must be supported off the ground or the forms by bar chairs made from wire, concrete or plastic.

(c) When using wire chairs, the minimum concrete cover (see (5)) to the uncoated portion of the chair must be obtained.

(d) Wire chairs on soft ground or plastic membrane must be placed on flat bases.

(e) Bar chairs must be spaced at not more than 800 mm centres for steel fabric.

Table 4.2.11a: Alternative mesh/reinforcing bar sizes

Trench mesh (TM)	Area — mm^2	Reinforcing bar alternative	Trench mesh alternative
2-L8TM	91	2-N10 or 1-N12	Not applicable
3-L8TM	136	2-N10 or 2-N12	Not applicable
4-L8TM	182	2-N12	2-L11TM
5-L8TM	227	2-N12	3-L11TM
2-L11TM	180	1-N16 or 2-N12	2x2-L8TM
3-L11TM	270	3-N12	2x3-L8TM
4-L11TM	360	2-N16	2x4-L8TM
2-L12TM	222	2-N12	3-L11TM
3-L12TM	333	3-N12	4-L11TM
4-L12TM	444	4-N12	5-L11TM

Table Notes

(1) Where necessary, 2 layers of mesh may be used.

(2) L11TM and L12TM may be replaced by RL1118 and RL1218 mesh respectively.

(3) L11TM may be replaced by two layers of L8TM.

Table 4.2.11b: Minimum lap for reinforcement

Reinforcement	Minimum splice	Minimum lap at “T” intersections	Minimum lap at “L” intersections
Steel reinforcing bars ≤12 mm diameter	500 mm	Full width across the junction	One outer bar must be bent and continue 500 mm (min) around corner
Steel reinforcing bars >12 mm to ≤16 mm diameter	700 mm	Full width across the junction	One outer bar must be bent and continue 500 mm (min) around corner
Trench mesh	500 mm	Full width across the junction	Full width across the junction
Square and rectangular mesh	The two outermost transverse wires of one sheet must overlap the two outermost transverse wires of the other	Not applicable	Not applicable

Figure 4.2.11a: Splice, L and T intersections

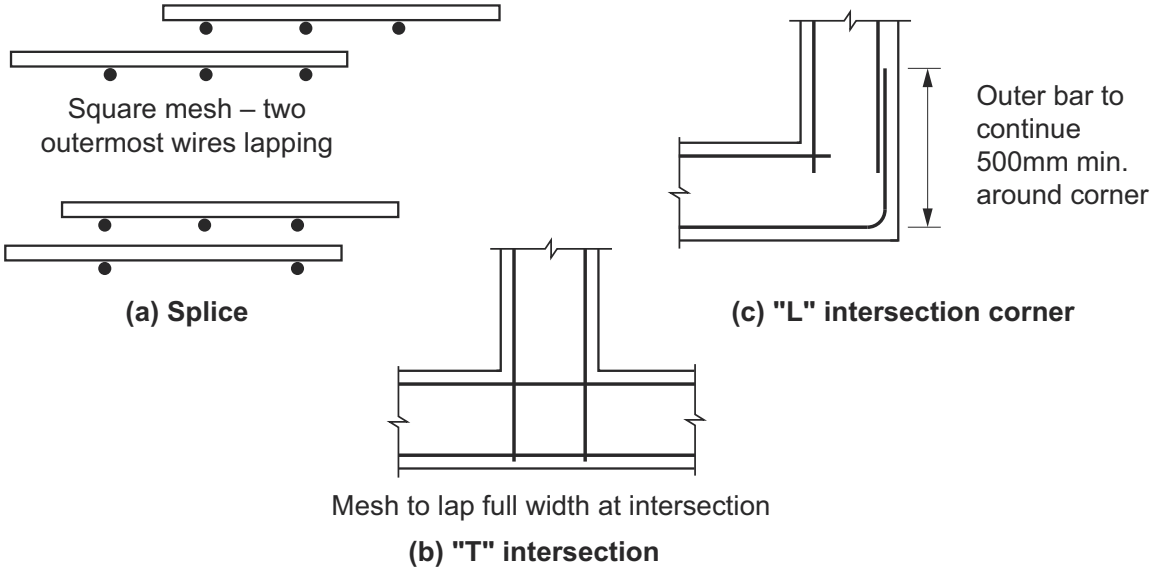

Figure 4.2.11b: Reinforcing for re-entrant corners

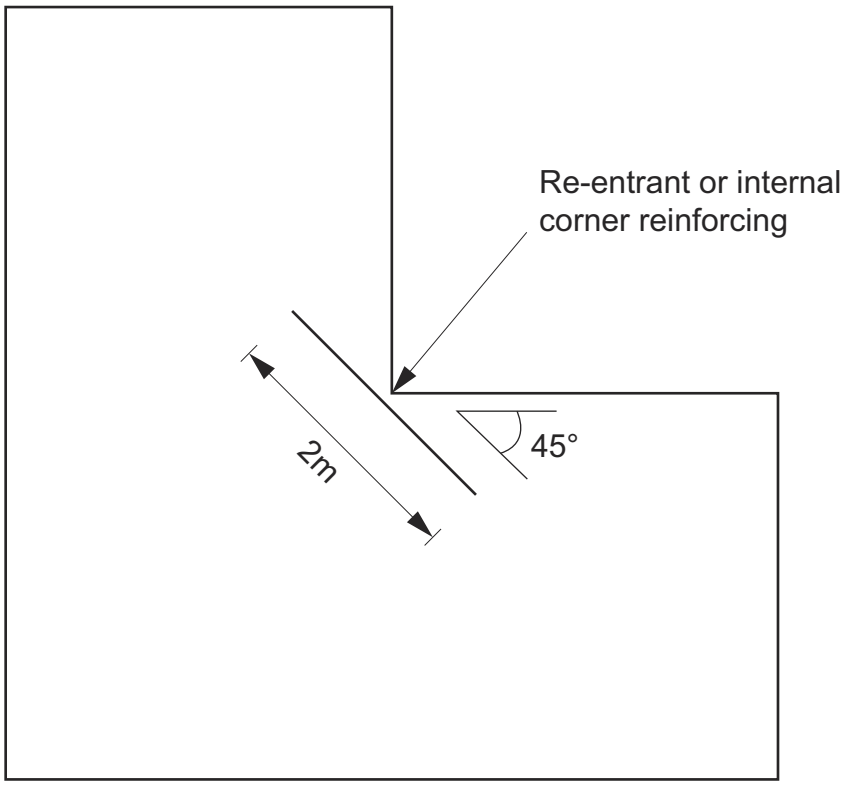

Explanatory Information: Reinforcement types

Reinforcement types referenced in this clause are described as follows:

- Square mesh is designated in terms of the diameter of each bar and the spacing of consecutive bars. For example, SL62 consists of 6 mm bar at 200 mm spacings.
- Trench mesh is designated in terms of the number of longitudinal bars and the diameter of each bar. For example, 3-L11TM consists of 3 longitudinal bars each of which are 11 mm in diameter.
- Reinforcing bars are designated in terms of the number of bars and the diameter of each bar. For example, 6-N12 consists of 6 bars each of which are 12 mm in diameter.

Explanatory Information: Cleaning and placement of reinforcing

In order to obtain a good bond between concrete and reinforcement, the reinforcement should be free of contamination by mud, paint, oils, etc. It is not necessary for the reinforcement to be completely free of rust. Some rusting is beneficial in promoting a good bond as it roughens the surface of the steel. Loose rust, however, must be removed from the reinforcement.

Reinforcement is designed to be in a particular place so as to add strength or to control cracking of the concrete. A displacement from its intended location could make a significant difference to the life or serviceability of the structure.

Supports for fabric reinforcement are provided to prevent the fabric distorting when workers walk on top of it to place the concrete and maintain the correct concrete cover to the fabric.

4.2.12 Footing and slab construction

[2019: 3.2.5.1]

Footing and slab construction, including size and placement of reinforcement, must be in accordance with the relevant provisions of—

(a) 4.2.13 for footings for stumps; and

(b) 4.2.14 for stiffened rafts on Class A, S and M *sites*; and

(c) 4.2.15 for strip footing systems on Class A, S and M *sites*; and

(d) 4.2.16 for footing slabs on Class A *sites*; and

(e) 4.2.17 for footings for *single leaf masonry*, *mixed construction* and earth retaining walls; and

(f) 4.2.18 for footings for fireplaces on Class A and S *sites*; and

(g) 4.2.19 for shrinkage control; and

(h) 4.2.20 for concentrated loads; and

(i) 4.2.21 for minimum edge beam dimensions; and

(j) 4.2.22 for recessed areas of slabs.

4.2.13 Stump footing details

[2019: 3.2.5.6]

(1) Footings for stumps must comply with—

(a) the provisions of Tables 4.2.13a, 4.2.13b or 4.2.13c for Class A and Class S *sites*; or

(b) the appropriate referenced document listed in—

(i) H1D6(3); or

(ii) H1D4.

(2) Concrete stumps must—

(a) be designed in accordance with—

(i) AS 3600; or

(ii) Tables 4.2.13d, 4.2.13e or 4.2.13f; and

(b) use a minimum 20 MPa concrete as defined in AS 3600.

(3) Steel stumps must be—

(a) designed in accordance with—

(i) AS 4100; or

(ii) Tables 4.2.13d, 4.2.13e or 4.2.13f; and

(b) fully enclosed and sealed with a welded top plate; and

(c) encased in concrete sloping away from the stump and finishing not less than 100 mm above *finished ground level*; and

(d) corrosion protected in accordance with Part 6.3.

(4) Timber stumps must be designed in accordance with—

(a) AS 1684.2, AS 1684.3, AS 1684.4 or AS 1720.1; or

(b) Tables 4.2.13d, 4.2.13e or 4.2.13f.

(5) Stumps must be braced—

(a) by a full perimeter masonry base; or

(b) for concrete stumps — in accordance with AS 3600; or

(c) for steel stumps — in accordance with AS 4100; or

(d) for timber stumps — in accordance with AS 1684.2, AS 1684.3, AS 1684.4 or AS 1720.1.

(6) Stumps must be embedded into the foundation material not less than 30% of their height above ground level or 450 mm, whichever is the greater.

(7) Pad footings for clad frame, Class A and Class S *sites*, must be in accordance with Table 4.2.13g and Figure 4.2.13.

Table 4.2.13a: Stumps supporting single storey timber floor and metal roof

Floor load area (m^2)	Dimension (mm)	Roof load area (m^2)		
		0	6	12
3	Square pad footing size	250 x 250	300 x 300	350 x 350
8	Square pad footing size	400 x 400	400 x 400	450 x 450
12	Square pad footing size	450 x 450	500 x 500	500 x 500
3	Circular pad footing diameter	300	400	400
8	Circular pad footing diameter	450	450	600
12	Circular pad footing diameter	600	600	600
3	Pad footing depth	250	250	250
8	Pad footing depth	250	250	250
12	Pad footing depth	250	250	250

Table Notes

(1) Load accounted for includes 0.53 kPa permanent floor, 0.92 kN/m permanent wall, 0.4 kPa permanent roof, permanent member self-weight, 1.5 kPa or 1.1 kN imposed floor and 0.25 kPa imposed roof.

(2) Load combinations for ULS included are 1.35G and 1.2G + 1.5Q for stumps and G + 0.5Q for pad footings.

(3) Minimum bearing pressure is 100 kPa for pad footings.

(4) For pad footings founded on rock, the width or diameter may be reduced by half but not less than 250 mm x 250 mm or 300 mm diameter.

(5) Stumps are assumed to be braced and simply-supported at both ends with an effective length factor of 1.

(6) A maximum load eccentricity of length/100 has been accounted for in the stumps.

(7) A roof load area of “0” must be used for stumps not supporting roof loads.

(8) The length of wall load allowed for is equal to the square root of the floor area.

Table 4.2.13b: Stumps supporting single storey tiled floor and tiled roof

Floor load area (m^2)	Dimension (mm)	Roof load area (m^2)		
		0	6	12
3	Square pad footing size	300 x 300	400 x 400	450 x 450
8	Square pad footing size	450 x 450	500 x 500	550 x 500
12	Square pad footing size	500 x 500	550 x 550	600 x 600
3	Circular pad footing diameter	400	450	600
8	Circular pad footing diameter	600	600	650
12	Circular pad footing diameter	650	650	700
3	Pad footing depth	250	250	250
8	Pad footing depth	250	250	250
12	Pad footing depth	250	300	300

Table Notes

(1) Load accounted for includes 0.98 kPa permanent floor, 0.92 kN/m permanent wall, 0.85 kPa permanent roof, permanent member self-weight, 1.5 kPa or 1.1 kN imposed floor and 0.25 kPa imposed roof.

(2) Load combinations for ULS included are 1.35G and 1.2G + 1.5Q for stumps and G + 0.5Q for pad footings.

(3) Minimum bearing pressure is 100 kPa for pad footings.

(4) For pad footings founded on rock, the width or diameter may be reduced by half but not less than 250 mm x 250 mm or 300 mm diameter.

(5) Stumps are assumed to be braced and simply-supported at both ends with an effective length factor of 1.

(6) A maximum load eccentricity of length/100 has been accounted for in the stumps.

(7) A roof load area of “0” must be used for stumps not supporting roof loads.

(8) The length of wall load allowed for is equal to the square root of the floor area.

Table 4.2.13c: Stumps supporting double storey timber floor and metal roof

Floor load area (m^2)	Dimension (mm)	Roof load area (m^2)		
		0	6	12
3	Square pad footing size	350 x 350	400 x 400	450 x 450
8	Square pad footing size	550 x 550	550 x 550	600 x 600
12	Square pad footing size	650 x 650	650 x 650	700 x 700
3	Circular pad footing diameter	400	450	600
8	Circular pad footing diameter	650	650	700
12	Circular pad footing diameter	750	750	800
3	Pad footing depth	250	250	250
8	Pad footing depth	300	300	350

Floor load area (m^2)	Dimension (mm)	Roof load area (m^2)		
		0	6	12
12	Pad footing depth	350	350	350

Table Notes

(1) Load accounted for includes 0.53 kPa permanent floor, 0.92 kN/m permanent wall, 0.4 kPa permanent roof, permanent member self-weight, 1.5 kPa or 1.1 kN imposed floor and 0.25 kPa imposed roof.

(2) Load combinations for ULS included are 1.35G and 1.2G + 1.5Q for stumps and G + 0.5Q for pad footings.

(3) Minimum bearing pressure is 100 kPa for pad footings.

(4) For pad footings founded on rock, the width or diameter may be reduced by half but not less than 250 mm x 250 mm or 300 mm diameter.

(5) Stumps are assumed to be braced and simply-supported at both ends with an effective length factor of 1.

(6) A maximum load eccentricity of length/100 has been accounted for in the stumps.

(7) A roof load area of "0" must be used for stumps not supporting roof loads.

(8) The length of wall load allowed for is equal to the square root of the floor area.

Table 4.2.13d: Maximum stump height (mm): stump supporting single storey timber floor and metal roof

Stump material	Section size (mm)	Floor load area (m^2)	Roof load area (m^2)		
			0	6	12
Concrete f'_c= 20 MPa	100 x 100	3	2500	2000	1750
Concrete f'_c = 20 MPa	100 x 100	8	1500	1500	1500
Concrete f'_c = 20 MPa	100 x 100	12	1250	1250	1250
Steel f_y = 350 MPa	100 x 100 x 2.0	3	3000	3000	3000
Steel f_y = 350 MPa	100 x 100 x 2.0	8	3000	3000	3000
Steel f_y = 350 MPa	100 x 100 x 2.0	12	3000	3000	3000
Timber F17	100 x 100	3	3000	3000	3000
Timber F17	100 x 100	8	2500	2500	2250
Timber F17	100 x 100	12	2250	2000	2000
Timber F14	100 x 100	3	3000	3000	2500
Timber F14	100 x 100	8	2250	2000	1750
Timber F14	100 x 100	12	1750	1500	1500
Timber F11	100 x 100	3	3000	2500	2250
Timber F11	100 x 100	8	2000	1750	1750
Timber F11	100 x 100	12	1500	1500	1250
Timber F8	100 x 100	3	3000	2500	2000
Timber F8	100 x 100	8	1750	1500	1250
Timber F8	100 x 100	12	1250	1000	750
Timber F7	100 x 100	3	2500	2250	1750
Timber F7	100 x 100	8	1500	1250	750
Timber F7	100 x 100	12	750	–	–
Timber F5	100 x 100	3	2500	2000	1500

Stump material	Section size (mm)	Floor load area (m^2)	Roof load area (m^2)		
			0	6	12
Timber F5	100 x 100	8	1250	750	–
Timber F5	100 x 100	12	–	–	–

Table Notes

(1) Load accounted for includes 0.53 kPa permanent floor, 0.92 kN/m permanent wall, 0.4 kPa permanent roof, permanent member self-weight, 1.5 kPa or 1.1 kN imposed floor and 0.25 kPa imposed roof.

(2) Load combinations for ULS included are 1.35G and 1.2G + 1.5Q for stumps and G + 0.5Q for pad footings.

(3) Minimum bearing pressure is 100 kPa for pad footings.

(4) Stumps are assumed to be braced and simply-supported at both ends with an effective length factor of 1.

(5) A maximum load eccentricity of length/100 has been accounted for in the stumps.

(6) A roof load area of "0" must be used for stumps not supporting roof loads.

(7) The length of wall load allowed for is equal to the square root of the floor area.

Table 4.2.13e: Maximum stump height: stump supporting single storey tiled floor and tiled roof

Stump material	Section size (mm)	Floor load area (m^2)	Roof load area (m^2)		
			0	6	12
Concrete f'_c = 20 MPa	100 x 100	3	2250	1750	1500
Concrete f'_c = 20 MPa	100 x 100	8	1500	1250	1250
Concrete f'_c = 20 MPa	100 x 100	12	1250	1250	750
Steel f_y = 350 MPa	100 x 100 x 2.0	3	3000	3000	3000
Steel f_y = 350 MPa	100 x 100 x 2.0	8	3000	3000	3000
Steel f_y = 350 MPa	100 x 100 x 2.0	12	3000	3000	3000
Timber F17	100 x 100	3	3000	3000	2500
Timber F17	100 x 100	8	2500	2250	2000
Timber F17	100 x 100	12	2000	2000	1750
Timber F14	100 x 100	3	3000	2500	2000
Timber F14	100 x 100	8	2000	1750	1500
Timber F14	100 x 100	12	1500	1250	1000
Timber F11	100 x 100	3	3000	2250	2000
Timber F11	100 x 100	8	1750	1500	1250
Timber F11	100 x 100	12	1250	1000	750
Timber F8	100 x 100	3	2500	2000	1750
Timber F8	100 x 100	8	1500	1250	1000
Timber F8	100 x 100	12	1000	500	–
Timber F7	100 x 100	3	2500	1750	1250
Timber F7	100 x 100	8	1250	750	–
Timber F7	100 x 100	12	–	–	–
Timber F5	100 x 100	3	2250	1500	1000
Timber F5	100 x 100	8	750	–	–

Stump material	Section size (mm)	Floor load area (m^2)	Roof load area (m^2)		
			0	6	12
Timber F5	100 x 100	12	–	–	–

Table Notes

(1) Load accounted for includes 0.98 kPa permanent floor, 0.92 kN/m permanent wall, 0.85 kPa permanent roof, permanent member self-weight, 1.5 kPa or 1.1 kN imposed floor and 0.25 kPa imposed roof.

(2) Load combinations for ULS included are 1.35G and 1.2G + 1.5Q for stumps and G + 0.5Q for pad footings.

(3) Minimum bearing pressure is 100 kPa for pad footings.

(4) Stumps are assumed to be braced and simply-supported at both ends with an effective length factor of 1.

(5) A maximum load eccentricity of length/100 has been accounted for in the stumps.

(6) A roof load area of "0" must be used for stumps not supporting roof loads.

(7) The length of wall load allowed for is equal to the square root of the floor area.

Table 4.2.13f: Maximum stump height: stump supporting double storey timber floor and metal roof

Stump material	Section size (mm)	Floor load area (m^2)	Roof load area (m^2)		
			0	6	12
Concrete f'_c = 20 MPa	100 x 100	3	1750	1500	1500
Concrete f'_c = 20 MPa	100 x 100	8	1250	1000	750
Concrete f'_c = 20 MPa	100 x 100	12	–	–	–
Steel f_y = 350 MPa	100 x 100 x 2.0	3	3000	3000	3000
Steel f_y = 350 MPa	100 x 100 x 2.0	8	3000	3000	3000
Steel f_y = 350 MPa	100 x 100 x 2.0	12	3000	2750	2500
Timber F17	100 x 100	3	3000	2500	2500
Timber F17	100 x 100	8	1750	1750	1500
Timber F17	100 x 100	12	1250	1250	1250
Timber F14	100 x 100	3	2500	2250	2000
Timber F14	100 x 100	8	1250	1250	1000
Timber F14	100 x 100	12	750	500	500
Timber F11	100 x 100	3	2250	2000	1750
Timber F11	100 x 100	8	1000	1000	750
Timber F11	100 x 100	12	–	–	–
Timber F8	100 x 100	3	2000	1750	1500
Timber F8	100 x 100	8	500	500	–
Timber F8	100 x 100	12	–	–	–
Timber F7	100 x 100	3	1750	1500	1250
Timber F7	100 x 100	8	–	–	–
Timber F7	100 x 100	12	–	–	–
Timber F5	100 x 100	3	1500	1000	750
Timber F5	100 x 100	8	–	–	–
Timber F5	100 x 100	12	–	–	–

Table Notes

(1) Load accounted for includes 0.53 kPa permanent floor, 0.92 kN/m permanent wall, 0.4 kPa permanent roof, permanent member self-weight, 1.5 kPa or 1.1 kN imposed floor and 0.25 kPa imposed roof.

(2) Load combinations for ULS included are 1.35G and 1.2G + 1.5Q for stumps and G + 0.5Q for pad footings.

(3) Minimum bearing pressure is 100 kPa for pad footings.

(4) Stumps are assumed to be braced and simply-supported at both ends with an effective length factor of 1.

(5) A maximum load eccentricity of length/100 has been accounted for in the stumps.

(6) A roof load area of "0" must be used for stumps not supporting roof loads.

(7) The length of wall load allowed for is equal to the square root of the floor area.

Table 4.2.13g: Minimum dimensions of circular and square pad footings for clad frame, Class A and S sites

Effective supported areas (m^2)	Width of square pad (mm)	Width of circular pad (mm)	Thickness (t) (mm)	Depth (mm)
10	400	500	200	400
20	500	600	200	400
30	600	750	250	400

Table Notes

(1) The effective area supported by a pad footing is the sum of—

(a) the supported floor area; and

(b) the supported roof area (if applicable); and

(c) half the supported wall area in elevation (if applicable).

(2) The width or diameter can be reduced to one half the above footings on rock.

(3) The pad footings must be constructed in concrete.

(4) Pad footing sizes must also apply to footings supporting roof and floor loads only.

(5) The *foundation* must provide an allowable bearing pressure of not less than 100 kPa.

(6) The excavation must be backfilled with manually rodded tamped soil, or the footing thickness shall be increased by 50 mm.

(7) Where stump pad footings provide resistance to horizontal or uplift forces, the minimum size of the footing must comply with AS 2870.

(8) Braced stumps must comply with 4.2.13(5).

(9) For masonry piers, strip footings complying with 4.2.15 for masonry can be used in lieu of pad footings.

Figure 4.2.13: Pad footings for clad frame, Class A and S sites

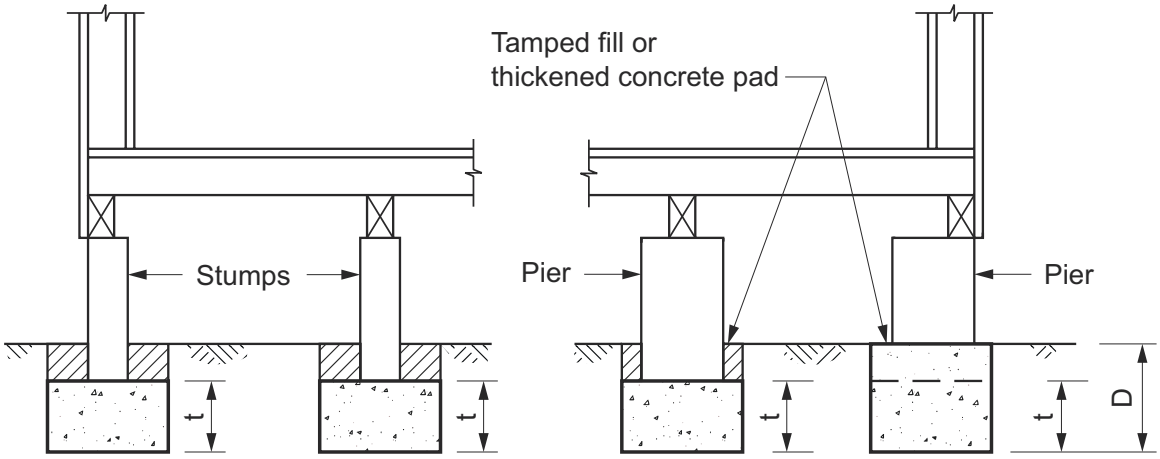

(a) Stumps **(b) Piers**

Figure Notes

(1) For minimum pad footing dimensions t and D, see Table 4.2.13g.

(2) For tamped fill or thickened concrete pads, see Note 6 to Table 4.2.13g.

4.2.14 Stiffened rafts Class A, S and M sites

[New for 2022]

Footing and stiffened raft slabs must comply with—

(a) For Class A and S *sites* — Tables 4.2.14a, 4.2.14b and Figure 4.2.14a; and

(b) For Class M *sites* — Table 4.2.14c and Figure 4.2.14b.

Table 4.2.14a: Reinforcement for stiffened raft footings for Class A sites

Type of construction	Depth (D) (mm)	Bottom reinf.	Max. spacing c/l to c/l	Slab fabric
Clad frame	300	3-L8TM	N/A	SL72
Articulated masonry veneer	300	3-L8TM	N/A	SL72
Masonry veneer	300	3-L8TM	N/A	SL72
Articulated full masonry	400	3-L8TM	N/A	SL72
Full masonry	400	3-L8TM	N/A	SL72

Table Notes

(1) Internal and external edge beams must be arranged to form an integral structural grid (see clauses 5.3.8 and 5.3.9 of AS 2870).

(2) A 10% increase in spacings is permitted where the spacing in the other direction is 20% less than that specified.

(3) Where external beams are wider than 300 mm, an extra bottom bar or equivalent of the same bar size is *required* for each 100 mm additional width.

(4) Where a reinforced *single leaf masonry* wall is constructed directly above and structurally connected to a concrete edge beam, the beam may be reduced to 300 mm wide by 300 mm deep and reinforced with 3–L8TM reinforcement.

(5) Alternative reinforcement sizes must comply with AS 2870.

(6) Internal beam details and spacings must comply with Figure 4.2.14a or Figure 4.2.14b.

Table 4.2.14b: Reinforcement for stiffened raft footings for Class S sites

Type of construction	Depth (D) (mm)	Bottom reinf.	Max. spacing c/l to c/l	Slab fabric
Clad frame	300	3-L8TM	N/A	SL72
Articulated masonry veneer	300	3-L8TM	N/A	SL72
Masonry veneer	300	3-L11TM	N/A	SL72
Articulated full masonry	450	3-L11TM	N/A	SL72
Full masonry	450	3-N16	5.0 (m) Note 2	SL82

Table Notes

(1) Internal and external edge beams must be arranged to form an integral structural grid (see clauses 5.3.8 and 5.3.9 of AS 2870).

(2) A 10% increase in spacings is permitted where the spacing in the other direction is 20% less than that specified.

(3) Where external beams are wider than 300 mm, an extra bottom bar or equivalent of the same bar size is *required* for each 100 mm additional width.

(4) Where a reinforced *single leaf masonry* wall is constructed directly above and structurally connected to a concrete edge beam, the beam may be reduced to 300 mm wide by 300 mm deep and reinforced with 3–L8TM reinforcement.

(5) Alternative reinforcement sizes must comply with AS 2870.

(6) Internal beam details and spacings must comply with Figure 4.2.14a or Figure 4.2.14b.

Table 4.2.14c: Reinforcement for stiffened raft footings for Class M sites

Type of construction	Depth (D) (mm)	Bottom reinf.	Max. spacing c/l to c/l	Slab mesh
Clad frame	300	3-L11TM	6.0 Note 2	SL72
Articulated masonry veneer	400	3-L11TM	6.0 Note 2	SL72
Masonry veneer	400	3-L11TM	5.0 Note 2	SL72
Articulated full masonry	500	3-L12TM	4.0	SL82
Full masonry	850	3-N16	4.0	SL92

Table Notes

(1) Internal and external edge beams must be arranged to form an integral structural grid (see clauses 5.3.8 and 5.3.9 of AS 2870).

(2) A 10% increase in spacings is permitted where the spacing in the other direction is 20% less than that specified.

(3) Where external beams are wider than 300 mm, an extra bottom bar or equivalent of the same bar size is *required* for each 100 mm additional width.

(4) Where a reinforced *single leaf masonry* wall is constructed directly above and structurally connected to a concrete edge beam, the beam may be reduced to 300 mm wide by 300 mm deep and reinforced with 3–L8TM reinforcement.

(5) Alternative reinforcement sizes must comply with AS 2870.

(6) Internal beam details and spacings must comply with Figure 4.2.14b.

Figure 4.2.14a: Footing slab and stiffened raft slab details for Class A and S sites

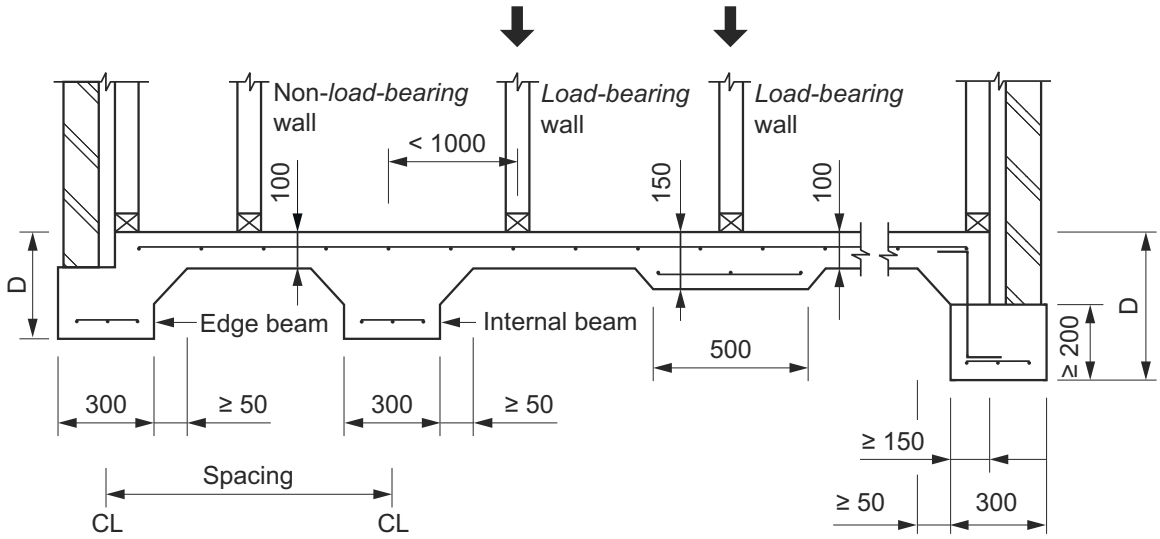

Figure 4.2.14b: Footing slab and stiffened raft slab details for Class M sites

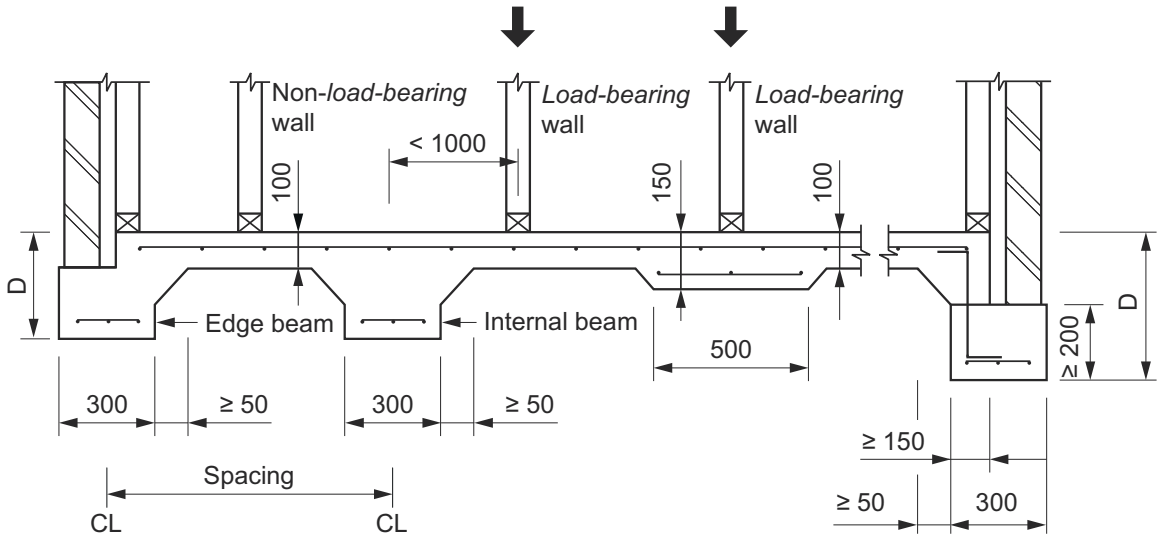

4.2.15 Strip footings Class A, S and M sites

[New for 2022]

Strip footings for Class A, S and M *sites* must comply with—

(a) for Class A and S *sites* — Tables 4.2.15a, 4.2.15b and Figure 4.2.15a; and

(b) for Class M *sites* — Table 4.2.15c and Figure 4.2.15b.

Table 4.2.15a: Dimensions and reinforcement for strip footing systems for Class A sites

Type of construction	D (mm)	B (mm)	Reinforcement (top and bottom)
Clad frame	300	300	3–L8TM
Articulated masonry veneer	300	300	3–L8TM
Masonry veneer	300	300	3–L8TM
Articulated full masonry	300	400	4–L8TM
Full masonry	300	400	4–L8TM

Table Notes

(1) All masonry walls must be supported on strip footings.

(2) Internal strip footings must be of the same proportions as the external footings and run from external footing to external footing. 'Side slip joints' consisting of a double layer of polyethylene must be provided at the sides of the footing only.

(3) Infill floors may be concrete slabs, brick paving, stone flags or compacted and stabilised earth. For concrete slab infill panels, mesh may be required to control shrinkage in slab panels and around openings or restrained regions. Concrete infill slabs must use a minimum of SL62 mesh to control shrinkage (see also 4.2.19).

(4) Where footings are wider than the specified width, an extra bottom bar or equivalent of the same bar size is *required* for each 100 mm additional width. If strip footings deeper than those *required* are used, the reinforcement must be increased to match that specified for the deepened proportions.

(5) The measurement of D_f is greater or equal to D plus 75 mm.

(6) Alternative reinforcing sizes must comply with AS 2870.

Table 4.2.15b: Dimensions and reinforcement for strip footing systems for Class S sites

Type of construction	D (mm)	B (mm)	Reinforcement (top and bottom)
Clad frame	400	300	3–L8TM
Articulated masonry veneer	400	300	3–L8TM
Masonry veneer	400	300	3–L8TM
Articulated full masonry	400	400	4–L11TM
Full masonry	500	400	4–L11TM

Table Notes

(1) All masonry walls must be supported on strip footings.

(2) Internal strip footings must be of the same proportions as the external footings and run from external footing to external footing. 'Side slip joints' consisting of a double layer of polyethylene must be provided at the sides of the footing only.

(3) Infill floors may be concrete slabs, brick paving, stone flags or compacted and stabilised earth. For concrete slab infill panels, mesh may be *required* to control shrinkage in slab panels and around openings or restrained regions. Concrete infill slabs must use a minimum of SL62 mesh to control shrinkage (see also 4.2.19).

(4) Where footings are wider than the specified width, an extra bottom bar or equivalent of the same bar size is *required* for each 100 mm additional width. If strip footings deeper than those *required* are used, the reinforcement must be increased to match that specified for the deepened proportions.

(5) The measurement of D_f is greater or equal to D plus 75 mm.

(6) Alternative reinforcing sizes must comply with AS 2870.

Table 4.2.15c: Dimensions and reinforcement for strip footing systems for Class M sites

Type of construction	D (mm)	B (mm)	Reinforcement (top and bottom)
Clad frame	400	300	3-L11TM
Articulated masonry veneer	450	300	3-L11TM
Masonry veneer	500	300	3-L12TM
Articulated full masonry	600	400	4-L12TM
Full masonry	900 Note 2	400	4-L12TM

Table Notes

(1) All masonry walls must be supported on strip footings.

(2) For beams 700 mm or deeper, as specified in the table above, internal footings must be provided at no more than

6 m centres and at re-entrant corners to continue footings to the opposite external footing. Internal strip footings must be of the same proportions as the external footings and run from external footing to external footing. 'Side slip joints' consisting of a double layer of polyethylene must be provided at the sides of the footing only.

(3) Infill floors must only be used for Class A and S sites.

(4) Where footings are wider than the specified width, an extra bottom bar or equivalent of the same bar size is *required* for each 100 mm additional width. If strip footings deeper than those *required* are used, the reinforcement must be increased to match that specified for the deepened proportions.

(5) The measurement of D_f is greater or equal to D plus 75 mm.

(6) Alternative reinforcing sizes must comply with AS 2870.

(7) For Class M articulated full masonry and full masonry, internal strip footings must be of the same proportions as the external footing and run from external footing to external footing.

Figure 4.2.15a: Strip footing systems for Class A and S sites

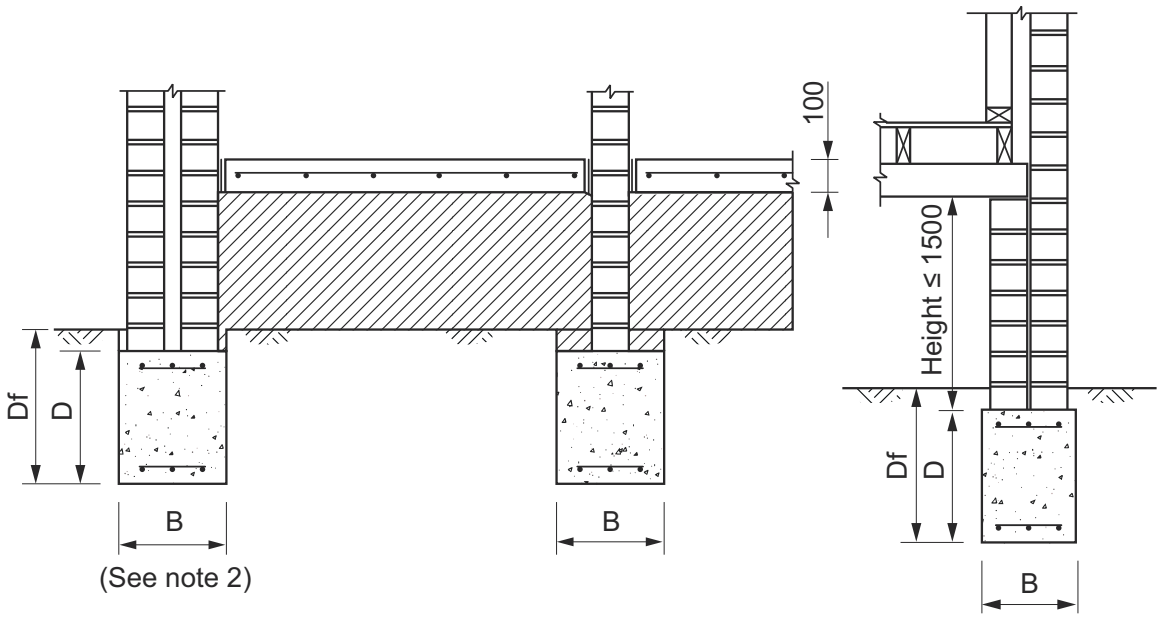

Figure Notes

See Notes to Tables 4.2.15a and 4.2.15b.

Figure 4.2.15b: Strip footing system for Class M sites

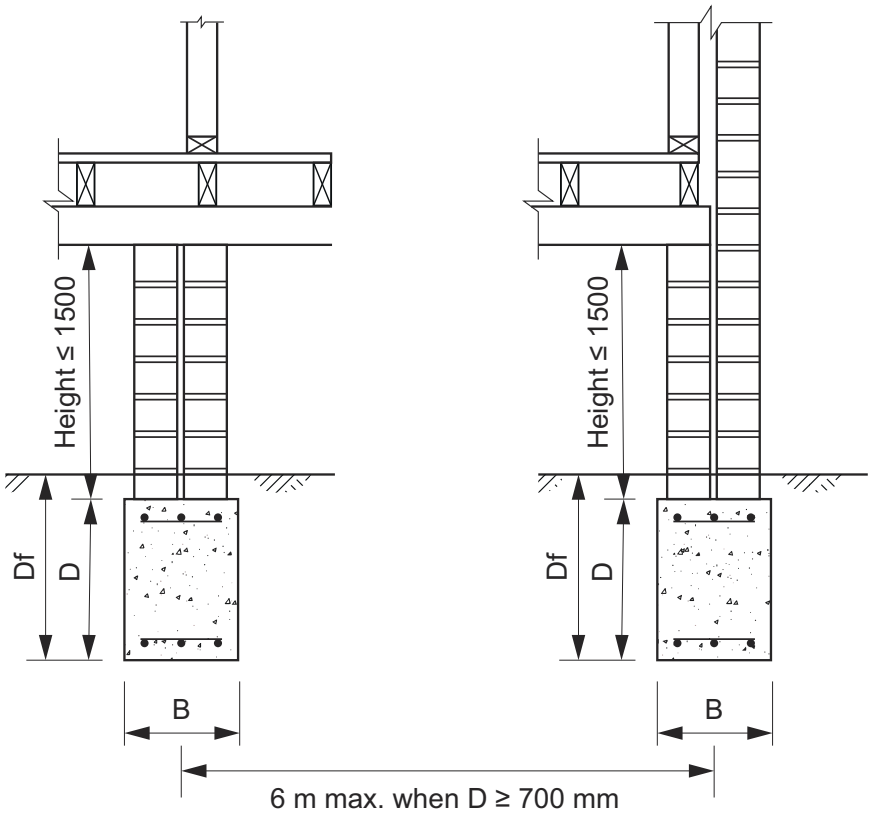

Figure Notes

See Notes Tables 4.2.15a, 4.2.15b and 4.2.15c.

4.2.16 Footing slabs for Class A sites

[New for 2022]

Footing slabs for Class A *sites* supporting the following *external wall* types must comply with Figure 4.2.16:

(a) *Clad frame*.

(b) *Articulated masonry*.

(c) Masonry veneer.

(d) Articulated full masonry.

(e) Full masonry.

Figure 4.2.16: Footing slabs for Class A sites suitable for clad frame, articulated masonry veneer, masonry veneer, articulated full masonry and full masonry

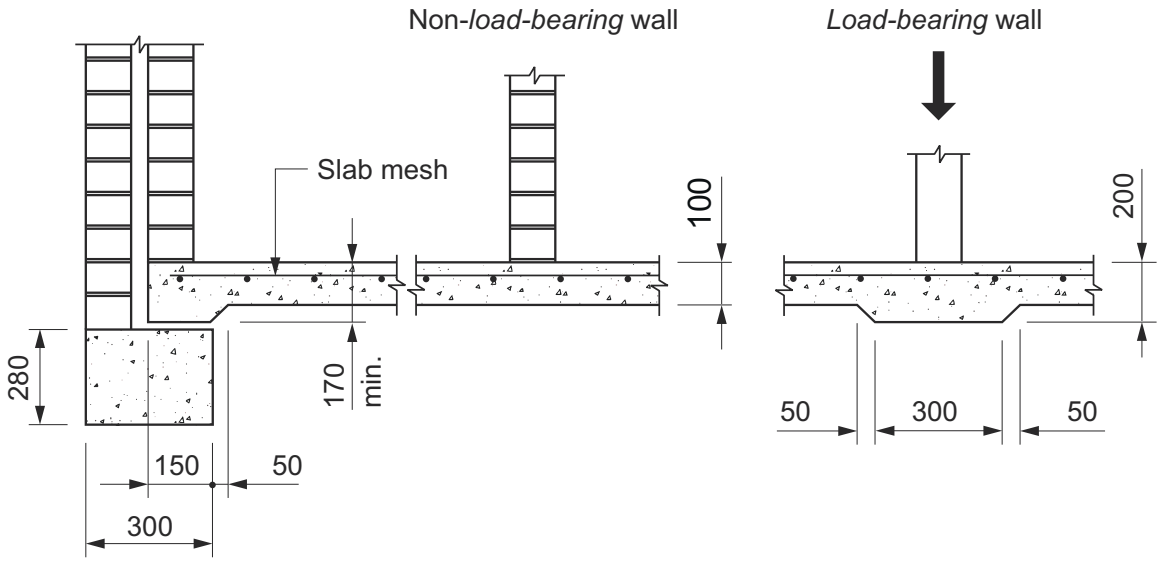

Figure Notes

(1) Use SL63 when slab length is less than 12 m.

(2) Use SL62 when slab length is less than 18 m.

(3) In parts of Western Australia (around Perth) and other locations where the *site* consists of extremely stable sands, and where specified by a *professional engineer*, the slab thickness may be reduced to 85 mm and reinforced as follows:

(a) Use SL53 when slab length is less than or equal to 12 m.

(4) Dune sands may require compaction.

4.2.17 Footings for single leaf masonry, mixed construction and earth wall construction

[2019: 3.2.5.2]

Footings supporting the following *external wall* types must comply with the equivalent wall construction set out in Tables 4.2.17a, 4.2.17b and 4.2.17c:

(a) *Single leaf masonry*.

(b) *Mixed construction*.

(c) Earth wall structures.

Table 4.2.17a: Equivalent wall construction: single leaf masonry

Actual construction: *external walls*	Actual construction: *internal walls*	Equivalent wall construction
Reinforced *single leaf masonry*	*Articulated masonry* on Class A and Class S *sites*, or framed	*Articulated masonry* veneer
Reinforced *single leaf masonry*	*Articulated masonry* or reinforced *single leaf masonry*	Masonry veneer
Articulated *single leaf masonry*	*Articulated masonry*	Articulated full masonry

Table 4.2.17b: Equivalent wall construction: mixed construction

Actual construction: *external walls*	Actual construction: *internal walls*	Equivalent wall construction
Full masonry	Framed	Articulated full masonry

Actual construction: *external walls*	Actual construction: *internal walls*	Equivalent wall construction
Articulated full masonry	Framed	Masonry veneer

Table 4.2.17c: Equivalent wall construction: earth wall construction

Actual construction: *external walls*	Actual construction: *internal walls*	Equivalent wall construction
Infill panels of earth wall construction	Framed earth wall construction	*Articulated masonry* veneer
Loadbearing earth wall construction	*Loadbearing* earth wall construction	Articulated full masonry

Explanatory Information

Tables 4.2.17a, 4.2.17b and 4.2.17c provide solutions for footings that are equivalent to those supporting a wall type that may be different to the actual type included in design documentation. The equivalent wall construction in the right-hand column of each of these tables recognises the types of footing systems suitable to support the actual *external wall* and *internal wall* types that may not have a specific solution for supporting footings.

4.2.18 Footings for fireplaces on Class A and S sites

[2019: 3.2.5.5]

(1) Fireplaces on Class A and S *sites* must be supported on a pad footing—

(a) 150 mm thick for single storey (one trafficable floor and a wall height not more than 4.2 m) construction; and

(b) 200 mm thick for 2 storey (two trafficable floors and a wall height not more than 8 m) construction; and

(c) reinforced top and bottom with SL72 mesh; and

(d) extending 300 mm past the edges of the masonry except for any edge flush with the outer wall.

(2) The pad footing must form an integral part of the slab.

4.2.19 Shrinkage control

[2019: 3.2.5.3]

Where brittle floor coverings, such as ceramic tiles, are to be used over an area greater than 16 m^2, one of the following additional measures must be taken to control the effect of shrinkage cracking—

(a) the amount of shrinkage reinforcement (steel reinforcement mesh in the slab panel) must be—

(i) increased to SL92 or equivalent throughout the affected slab area; or

(ii) reinforced top and bottom with sheets of slab mesh throughout the affected slab area; or

(b) the bedding system for brittle coverings must be selected on the basis of the expected slab movement and the characteristics of the floor covering (including the use of expansion joints etc.); or

(c) the placement of floor covering must be delayed for not less than 3 months after the concrete has been poured.

4.2.20 Concentrated loads

[New for 2022]

Where a footing or slab supports a concentrated load from a structural steel column, localised thickening must—

(a) be provided in accordance with—

(i) for tiled floor and tiled roof, Tables 4.2.20a, 4.2.20b or 4.2.20c; or

(ii) for timber floor and metal roof, Tables 4.2.20d, 4.2.20e or 4.2.20f; and

(b) be centred under the structural steel column; and

(c) have SL72 reinforcement with a minimum 50 mm of concrete cover (see Figure 4.2.20).

Table 4.2.20a: Localised thickening under concentrated load — tiled floor and tiled roof — roof load area = 0 m²

Localised thickening	Maximum floor load area (m²)		
	4	10	16
Square thickening size (mm)	450 x 450	650 x 650	850 x 850
Thickening depth (mm)	250	350	400

Table Notes

(1) Load accounted for includes 0.98 kPa permanent tiled floor, 0.85 kPa permanent tiled roof, 1.16 kN/m permanent wall, permanent member self-weight, 1.5 kPa or 1.1 kN imposed floor and 0.25 kPa imposed roof.

(2) Load combinations included are G + 0.5Q for ULS.

(3) Minimum bearing pressure is 100 kPa for pad footings.

(4) A roof load area of "0" must be used for footings not supporting roof loads.

(5) The length of wall allowed for is equal to the square root of the floor area.

Table 4.2.20b: Localised thickening under concentrated load — tiled floor and tiled roof — roof load area = maximum 9 m²

Localised thickening	Maximum floor load area (m²)		
	4	10	16
Square thickening size (mm)	650 x 650	800 x 800	950 x 950
Thickening depth (mm)	350	400	450

Table Notes

(1) Load accounted for includes 0.98 kPa permanent tiled floor, 0.85 kPa permanent tiled roof, 1.16 kN/m permanent wall, permanent member self-weight, 1.5 kPa or 1.1 kN imposed floor and 0.25 kPa imposed roof.

(2) Load combinations included are G + 0.5Q for ULS.

(3) Minimum bearing pressure is 1000 kPa for pad footings.

(4) The length of wall allowed for is equal to the square root of the floor area.

Table 4.2.20c: Localised thickening under concentrated load — tiled floor and tiled roof — roof load area = maximum 18 m²

Localised thickening	Maximum floor load area (m²)		
	4	10	16
Square thickening size (mm)	750 x 750	900 x 900	1000 x 1000
Thickening depth (mm)	400	450	500

Table Notes

(1) Load accounted for includes 0.98 kPa permanent tiled floor, 0.85 kPa permanent tiled roof, 1.16 kN/m permanent wall, permanent member self-weight, 1.5 kPa or 1.1 kN imposed floor and 0.25 kPa imposed roof.

(2) Load combinations included are G + 0.5Q for ULS.

(3) Minimum bearing pressure is 1000 kPa for pad footings.

(4) The length of wall allowed for is equal to the square root of the floor area.

Table 4.2.20d: Localised thickening under concentrated load — timber floor and metal roof — roof load area = 0 m²

Localised thickening	Maximum floor load area (m²)		
	4	10	16
Square thickening size (mm)	400 x 400	600 x 600	750 x 750
Thickening depth (mm)	250	300	350

Table Notes

(1) Load accounted for includes 0.53 kPa permanent timber floor, 0.4 kPa permanent metal roof, 1.16 kN/m permanent wall, permanent member self-weight, 1.5 kPa or 1.1 kN imposed floor and 0.25 kPa imposed roof.

(2) Load combinations included are G + 0.5Q for ULS.

(3) Minimum bearing pressure is 1000 kPa for pad footings.

(4) A roof load area of "0" must be used for footings not supporting roof loads.

(5) The length of wall allowed for is equal to the square root of the floor area.

Table 4.2.20e: Localised thickening under concentrated load — timber floor and metal roof — roof load area = maximum 9 m²

Localised thickening	Maximum floor load area (m²)		
	4	10	16
Square thickening size (mm)	500 x 500	700 x 700	800 x 800
Thickening depth (mm)	300	350	400

Table Notes

(1) Load accounted for includes 0.53 kPa permanent timber floor, 0.4 kPa permanent metal roof, 1.16 kN/m permanent wall, permanent member self-weight, 1.5 kPa or 1.1 kN imposed floor and 0.25 kPa imposed roof.

(2) Load combinations included are G + 0.5Q for ULS.

(3) Minimum bearing pressure is 1000 kPa for pad footings.

(4) The length of wall allowed for is equal to the square root of the floor area.

Table 4.2.20f: Localised thickening under concentrated load — timber floor and metal roof — roof load area = maximum 18 m²

Localised thickening	Maximum floor load area (m²)		
	4	10	16
Square thickening size (mm)	600 x 600	750 x 750	850 x 850
Thickening depth (mm)	300	400	450

Table Notes

(1) Load accounted for includes 0.53 kPa permanent timber floor, 0.4 kPa permanent metal roof, 1.16 kN/m permanent wall, permanent member self-weight, 1.5 kPa or 1.1 kN imposed floor and 0.25 kPa imposed roof.

(2) Load combinations included are G + 0.5Q for ULS.

(3) Minimum bearing pressure is 1000 kPa for pad footings.

(4) The length of wall allowed for is equal to the square root of the floor area.

Figure 4.2.20: Localised thickening for concentrated loads

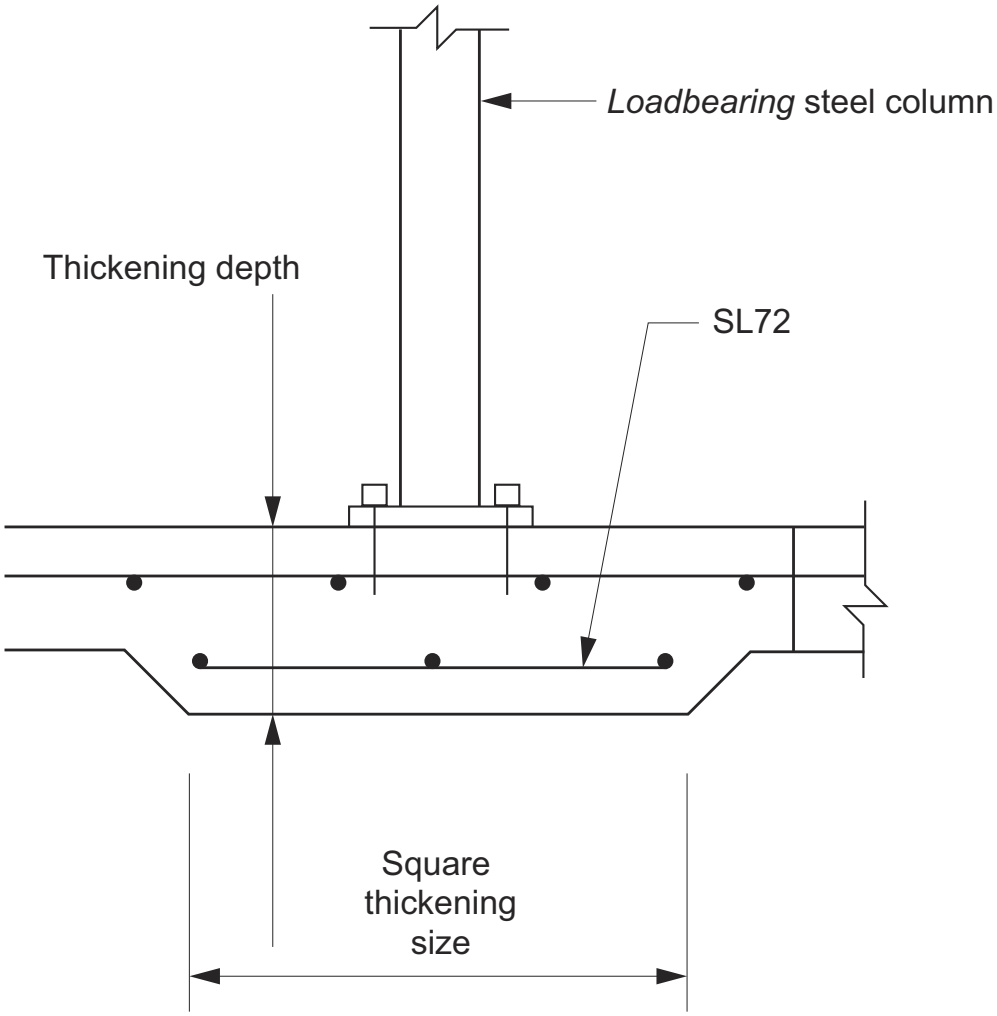

4.2.21 Minimum edge beam dimensions

[2019: 3.2.5.4]

For footing slabs, the width of the edge beam at the base of the rebate must not be less than 200 mm, except that if R10 or N10 ties at 900 mm spacing (or equivalent) are provided to resist vertical forces, the width of the edge beam at the base of the rebate can be reduced to 150 mm.

4.2.22 Recessed areas of slabs

[New for 2022]

(1) Where a recess in a slab is provided, it must comply with one of the following:

(a) For recess depths less than or equal to half the nominal slab thickness, the reinforcing mesh must have a minimum lap length of 400 mm measured from the inside face of the recess (see Figure 4.2.22a).

(b) For recess depths greater than half the nominal slab thickness (see Figure 4.2.22b)—

(i) top reinforcing mesh must overlap the bottom reinforcing mesh by not less than 400 mm; and

(ii) bottom reinforcing mesh must be two layers of SL72.

(2) Concrete cover to reinforcing in (1)(a) and (b) must comply with 4.2.11(5).

Figure 4.2.22a: Recess depths (d) less than or equal to nominal slab thickness

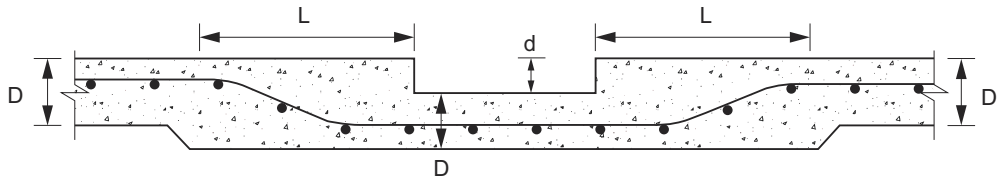

Figure 4.2.22b: Recess depths (d) greater than nominal slab thickness

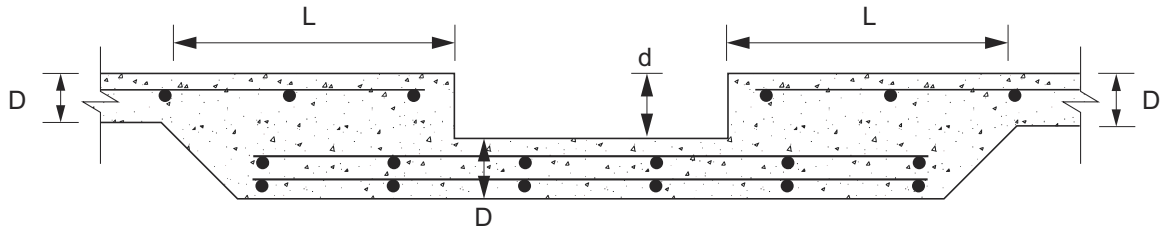

5 Masonry

Part 5.1 Scope and application of Section 5

5.1.1 Scope
5.1.2 Application

Part 5.2 Masonry veneer

5.2.1 Application
5.2.2 Height of wall limitation
5.2.3 Openings in masonry veneer
5.2.4 Damp-proof courses and flashing materials
5.2.5 Vertical articulation joints
5.2.6 Engaged piers

Part 5.3 Cavity masonry

5.3.1 Application
5.3.2 Height of wall limitation
5.3.3 External walls
5.3.4 Internal walls
5.3.5 Openings in cavity masonry
5.3.6 Damp-proof courses and flashing materials
5.3.7 Vertical articulation joints

Part 5.4 Unreinforced single leaf masonry

5.4.1 Application of Part 5.4
5.4.2 External walls
5.4.3 Internal walls
5.4.4 Vertical articulation joints
5.4.5 Damp-proof courses and flashing materials

Part 5.5 Isolated piers

5.5.1 Application
5.5.2 Isolated piers supporting carports, verandahs, porches and similar roof structures
5.5.3 Isolated piers supporting tiled roofs
5.5.4 Isolated piers supporting sheet roofs
5.5.5 Isolated piers for freestanding carports
5.5.6 Subfloor isolated piers

Part 5.6 Masonry components and accessories

5.6.1 Application
5.6.2 Masonry units
5.6.3 Mortar mixes
5.6.4 Mortar joints
5.6.5 Wall ties
5.6.6 Fixing straps and tie-down systems
5.6.7 Lintels
5.6.8 Vertical articulation joints

Part 5.7 Weatherproofing of masonry

5.7.1 Application
5.7.2 Cavities
5.7.3 Damp-proof courses and flashings – material
5.7.4 Damp-proof courses and flashings – installation
5.7.5 Weepholes
5.7.6 Weatherproofing for single leaf masonry walls

Part 5.1 Scope and application of Section 5

5.1.1 Scope

[New for 2022]

(1) This Section sets out the *Deemed-to-Satisfy Provisions* for—

(a) masonry veneer — see Part 5.2; and

(b) *cavity* masonry — see Part 5.3; and

(c) single leaf *unreinforced masonry* — see Part 5.4; and

(d) isolated masonry piers — see Part 5.5; and

(e) masonry components and accessories — see Part 5.6; and

(f) weatherproofing of masonry — see Part 5.7.

(2) For other masonry provisions not included in this Section, refer to NCC Volume Two: H1D5(4) *Reinforced masonry*.

5.1.2 Application

[New for 2022]

The application of this Section is subject to the following:

(a) The Governing Requirements of NCC 2022 Volume Two.

(b) Any conditions set out within the following *Deemed-to-Satisfy Provisions* of NCC Volume Two:

(i) H1D5(1), for masonry veneer.

(ii) H1D5(2), for *cavity* masonry.

(iii) H1D5(3), for *unreinforced masonry*.

(iv) H1D5(5), for isolated masonry piers.

(v) H1D5(6), for masonry accessories.

(vi) H2D4(2)(c), for weatherproofing of masonry.

(c) The State and Territory variations, additions and deletions contained in the Schedules to the ABCB Housing Provisions and NCC Volume Two.

Explanatory Information

In NCC 2019, the content of Section 5 of the ABCB Housing Provisions (other than content added in NCC 2022 or later) was contained in the acceptable construction practices for Parts 3.3.5 and 3.3.6 of NCC 2019 Volume Two.

NCC 2019 Volume Two did not include an acceptable construction practice for Parts 3.3.1, 3.3.2, 3.3.3 or 3.3.4.

Part 5.2 Masonry veneer

5.2.1 Application

[New for 2022]

(1) Part 5.2 is subject to the limitations set out in H1D5(1)(c).

(2) Part 5.2 need not be complied with if H1D5(1)(a) or (b) are complied with.

5.2.2 Height of wall limitation

[2019: 3.3.5.2]

Masonry veneer walls must not be greater than 8.5 m in height when measured above the adjacent finished ground level.

5.2.3 Openings in masonry veneer

[2019: 3.3.5.11]

(1) Except where excluded by (2), openings in masonry veneer must be spanned by steel lintels.

(2) Openings in masonry veneer not more than 500 mm wide need not be provided with a steel lintel provided the opening is adequately supported.

5.2.4 Damp-proof courses and flashing materials

[New for 2022]

Damp-proof courses and *flashing* materials must be in accordance with 5.7.3 and 5.7.4.

5.2.5 Vertical articulation joints

[New for 2022]

Vertical articulation joints are to be installed in accordance with 5.6.8.

5.2.6 Engaged piers

[2019: 3.3.5.14]

Where *engaged piers* are installed to support subfloor framing, they must comply with the provisions of this Part and be constructed as follows:

(a) Footings for piers must comply with Section 4.

(b) *Engaged piers* must not support more than a single storey with a roof framing span of not more than 12 m.

(c) Piers must be spaced at not more than 3 m centres with floor framing complying with—

  (i) H1D6(3) for steel framing; and

  (ii) H1D6(4) for timber framing; and

  (iii) H1D6(5) for structural steel framing.

(d) Piers must be—

  (i) not more than 1.2 m high; and

  (ii) a minimum thickness of 100 mm inclusive of mortar; and

  (iii) a width greater than the depth of the timber or steel section which it is supporting (see Figure 5.2.6).

(e) Notwithstanding (c), *engaged piers* must be located beneath—

(i) each side of *window* and door openings; and

(ii) concentrated roof loads, inclusive of any roof beams and girder trusses.

(f) Piers must be tied or bonded to the external masonry wall, and where ties are used they must comply with 5.6.5.

(g) Piers formed from hollow-core masonry units must be filled with grout.

Figure 5.2.6: Engaged pier

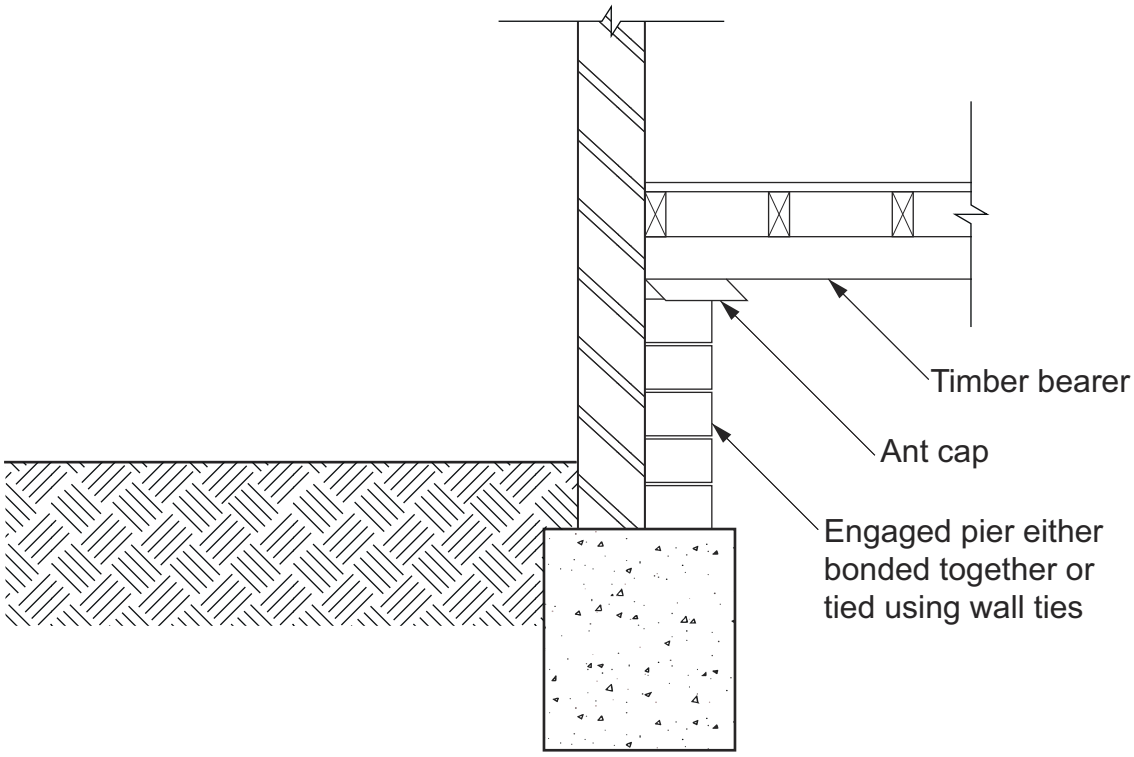

Part 5.3 Cavity masonry

5.3.1 Application

[New for 2022]

(1) Part 5.3 applies subject to the limitations set out in H1D5(2)(c).

(2) Part 5.3 need not be complied with if H1D5(2)(a) or (b) are complied with.

5.3.2 Height of wall limitation

[New for 2022]

Cavity masonry walls must not be greater than 8.5 m in height when measured above the adjacent *finished ground level*.

5.3.3 External walls

[New for 2022]

(1) *Cavity* masonry walls must comply with the relevant provisions of this Part and Parts 5.6 and 5.7, and be constructed as follows:

- (a) The height of the wall between *lateral supports* (floor or ceiling or roof diaphragm) must be not more than 3 m.
- (b) *Cavity* masonry walls subject to wind loads must be supported by masonry cross walls or by steel mullions complying with (3).
- (c) Masonry cross walls must be—
  - (i) not less than 2 m in length; and
  - (ii) at not more than 5.1 m centres where the length of the *cavity* wall being supported does not contain any opening or control joint; and
  - (iii) not more than 2.5 m from the edge of a control joint in the length of the *cavity* wall being supported; and
  - (iv) not more than a distance from the edge of an opening in the length of the *cavity* wall being supported as stated in Table 5.3.3; and
  - (v) located at both edges of openings of width greater than 2.7 m; and
  - (vi) directly connected to the internal leaf of the *cavity* wall being supported using—
    - (A) properly bonded units with at least 90 mm engagement on each side of the interface with the selected bond pattern but not less than every fourth course of masonry; or
    - (B) medium duty Type A *cavity* wall ties in aligning mortar bed joints at a vertical spacing of not more than 300 mm; and
  - (vii) connected by a floor or ceiling diaphragm to the wall being supported where floor or ceiling connections are designed in accordance with AS/NZS 4600, AS 1720.1 or AS 3600, as appropriate.

(2) *Cavity* masonry walls must be constructed of two leaves, with each leaf not less than 90 mm wide.

(3) In *cavity* masonry construction, a *cavity* must be provided between the inner and outer masonry leaves as follows:

- (a) The *cavity* must be not less than 35 mm and not more than 75 mm in width, in accordance with 5.7.2.
- (b) Except for steel mullions, the minimum *cavity* width specified in (a) is to be maintained between the outer masonry leaf and any insulation or services located in the *cavity*.
- (c) Where steel mullions are located in a *cavity* as permitted by (b), a vertical *damp-proof course* must be placed between the outer masonry leaf and the mullion to prevent moisture penetration.

Table 5.3.3: Spacing of return walls for cavity walls with openings — distance from the edge of an opening (mm)

Wind class	Opening width (mm)			
	900	1500	2100	2700
N3	2100	1800	800	400
N2	3200	2900	2600	2300
N1	2500(Note)	2200(Note)	1900(Note)	800(Note)

Table Notes

The spacing in wind class N1 is smaller than for N2 because 5.6.5 states that for *cavity* walls in wind class N1, light duty *cavity* ties are to be used. This results in only relying on one leaf to resist the load instead of sharing it equally as per clause 7.7.3 of AS 3700.

Explanatory Information

Steel mullions complying with AS 4773.1 and 4773.2 used to support wind loads may be placed within a *cavity*. Flat ceiling capable of performing diaphragm action may act as *lateral support* to walls provided the structure has been specifically designed.

5.3.4 Internal walls

[New for 2022]

(1) Where internal masonry walls intersect with other internal or external walls they must comply with the relevant provisions of this Part and be—

(a) not less than 75 mm thick; and

(b) either—

(i) bonded at the junctions of the intersecting walls; or

(ii) provided with an articulation joint in accordance with 5.6.8.

(2) Where a vertical articulation joint is provided in an internal masonry wall it must be formed in accordance with 5.6.8.

5.3.5 Openings in cavity masonry

[New for 2022]

(1) Except where excluded by (2), openings in *cavity* masonry must be spanned by steel lintels in accordance with 5.6.7.

(2) Openings in *cavity* masonry not more than 500 mm wide need not be provided with a steel lintel provided the opening is adequately supported.

Explanatory Information

An opening of not more than 500 mm is considered to be adequately supported if the masonry bears directly on a timber window head or steel frame.

5.3.6 Damp-proof courses and flashing materials

[New for 2022]

Damp-proof courses and *flashing* must be provided in accordance with 5.7.3 and 5.7.4.

5.3.7 Vertical articulation joints

[New for 2022]

Vertical articulation joints are to be installed in accordance with 5.6.8.

Part 5.4 Unreinforced single leaf masonry

5.4.1 Application of Part 5.4

[New for 2022]

(1) Part 5.4 applies subject to the limitations set out in H1D5(3)(c).

(2) Part 5.4 need not be complied with if H1D5(3)(a) or (b) are complied with.

5.4.2 External walls

[New for 2022]

(1) Single leaf *unreinforced masonry* walls with *engaged piers* and return walls must comply with the relevant provisions of this Part and be constructed in accordance with the following:

(a) The roof frame must be connected continuously to the top of the wall (see Figure 5.4.2a).

(b) *Stack bonded piers* must have wall ties at every fourth course.

(c) Pier and return supports size limitations for—

(i) single leaf *unreinforced masonry* walls with *engaged piers*, must comply with Table 5.4.2a and Figure 5.4.2b; and

(ii) single leaf *unreinforced masonry* walls with return supports, must comply with Table 5.4.2b and Figure 5.4.2c.

(d) An *engaged pier* or return wall must be provided at both sides of an opening.

(e) The width of an opening must be not more than the spacing between the *engaged piers* unless the *engaged piers* either side of the opening are designed in accordance with AS 3700.

(f) Articulation joints must be located within 300 mm of vertical supports in accordance with 5.6.8.

(2) A Class 10a building containing not more than 1 storey may be enclosed with single leaf masonry *external walls* not less than 90 mm in thickness, provided that—

(a) the building measured in the direction of the span of the roof is not more than 9 m and the height is not more than 2.7m; and

(b) *engaged piers* are provided that are in accordance with Tables 5.4.2c and 5.4.2d; and

(c) the roof does not place any spreading thrust onto the *external walls*; and

(d) the Class 10a building is located in an area with a wind class of not more than N2.

Table 5.4.2a: Engaged piers in external single leaf masonry walls to AS 3700

Element	Symbol used in Figure 5.4.2b	Thickness of wall (T)	
		90	110
Pier size (minimum) (not more than N2)	A x B	290 x 190 (800 spacing)	350 x 230 (1150 spacing)
Pier size (minimum) (not more than N3)	A x B	290 x 290 (700 spacing)	350 x 350 (1050 spacing)
Spacing of returns (maximum)	S	700	1050
Height (maximum)	H	2400	2700

Table Notes

(1) Dimensions are in mm.

(2) Return supports are not *required* for 140 mm and 190 mm thick walls.

Table 5.4.2b: Return support limitations for external single leaf masonry walls to AS 3700

Element	Symbol used in Figure 5.4.2c	Thickness of wall (T)			
		90	110	140	190
Return length (minimum)	R	450	450	–	–
Spacing of returns (maximum) (N2)	S	1050	1300	–	–
Spacing of returns (maximum) (N3)	S	600	750	–	–
Height (maximum)	H	2400	2400	1700 (N2)	2300 (N2)

Table Notes

(1) Dimensions are in mm.

(2) Return supports are not *required* for 140 mm and 190 mm thick walls.

Table 5.4.2c: Engaged piers in external walls of Class 10a buildings — wall height: 2.4 m

Wall thickness (mm)	Pier thickness (mm)	Pier width (mm)	Spacing (mm) for wind class	
			N1	N2
90	190	290	1000	600
90	290	190	1700	1200
90	290	290	2600	1800
110	230	230	1320	840
110	230	350	2040	1320
110	350	230	3240	2160
110	350	350	4920	3360

Table 5.4.2d: Engaged piers in external walls of Class 10a building — wall height: 2.7 m

Wall thickness (mm)	Pier thickness (mm)	Pier width (mm)	Spacing (mm) for wind class	
			N1	N2
90	190	290	700	500
90	290	190	1300	900
90	290	290	2000	1400
110	230	230	960	600
110	230	350	1440	960
110	350	230	2520	1680
110	350	350	3840	2520

Figure 5.4.2a: Top lateral restraint detail for unreinforced single leaf masonry walls

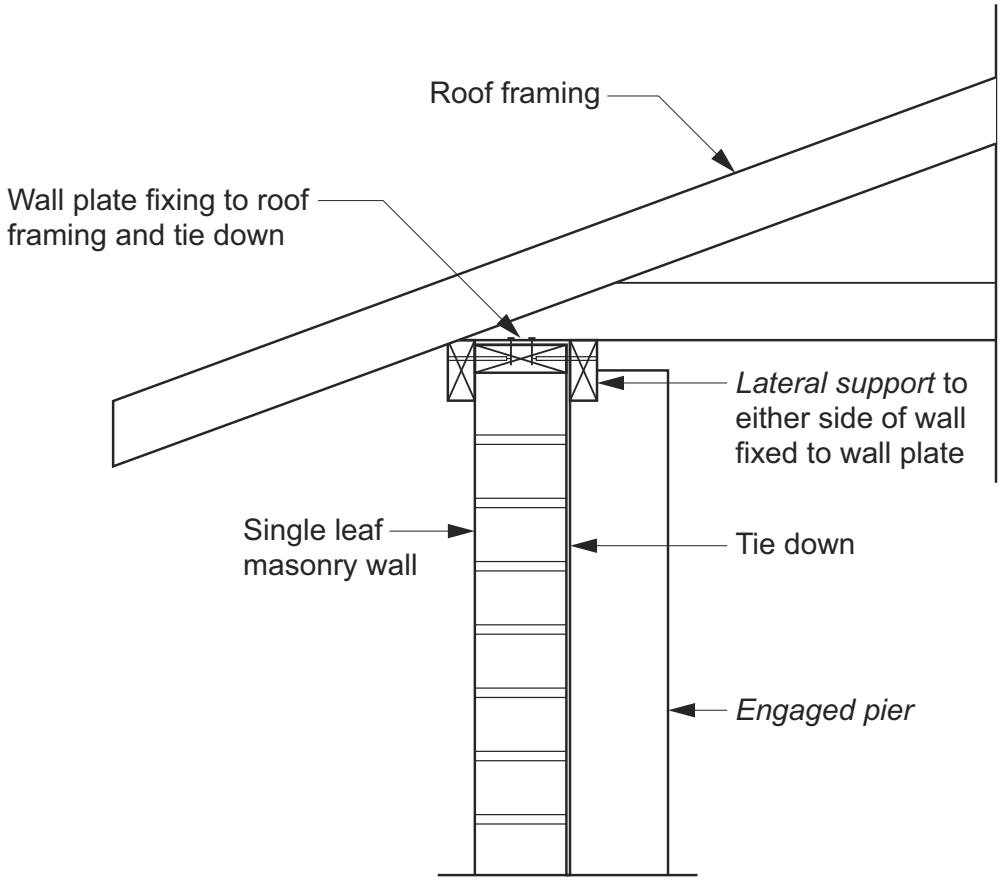

Figure Notes

Tie down of wall must comply with 5.6.6.

Figure 5.4.2b: Engaged piers in external single leaf masonry walls to AS 3700

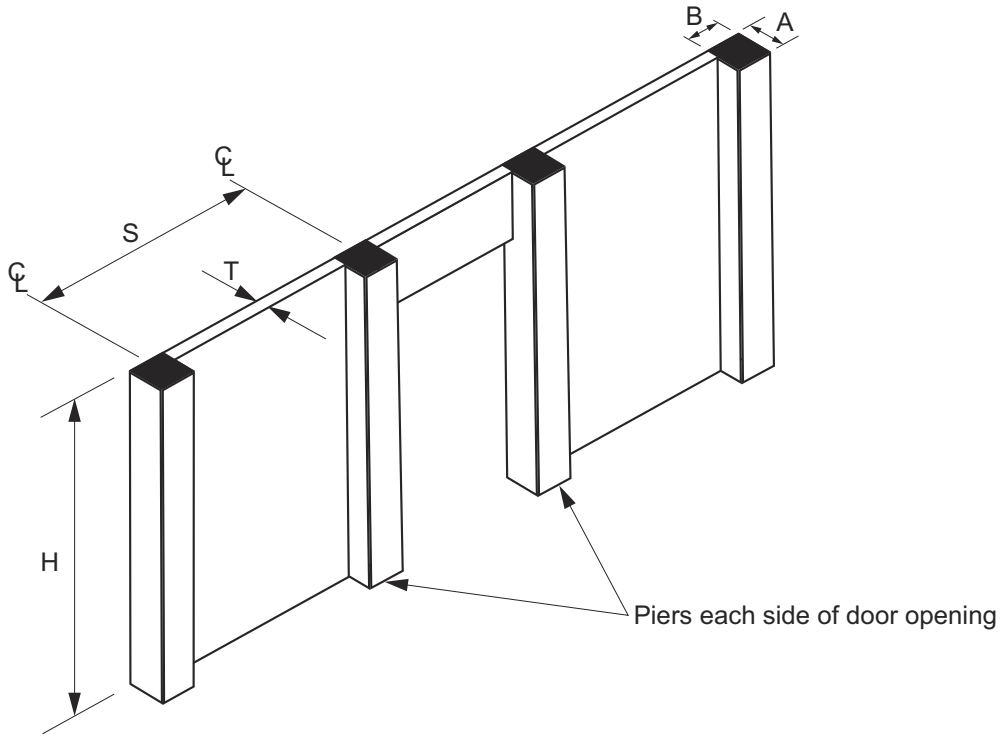

Figure 5.4.2c: Return support limitations for external single leaf masonry walls to AS 3700

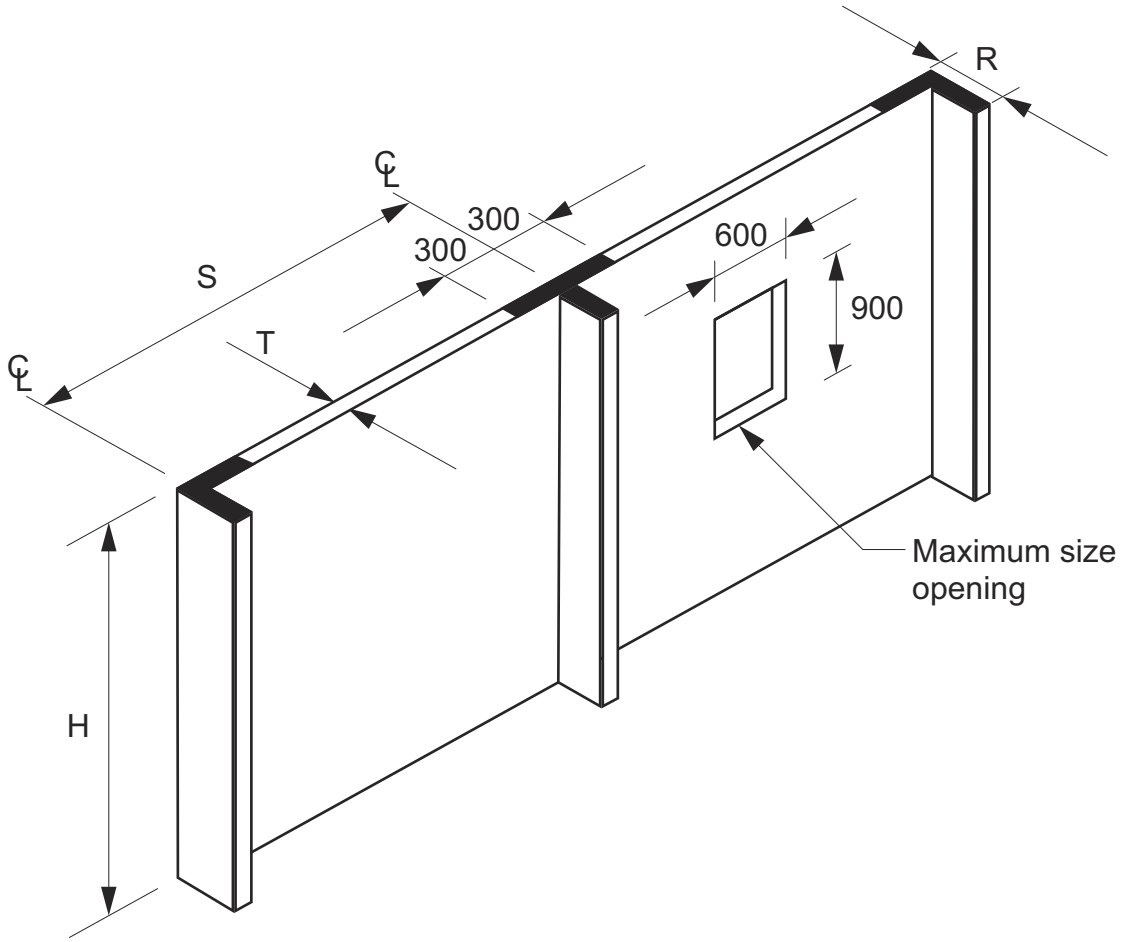

5.4.3 Internal walls

[New for 2022]

Internal masonry walls must be engaged with other walls, must comply with the relevant provisions of this Part and must be—

(a) not less than 75 mm thick; and

(b) supported by either—

(i) the ceiling structure in accordance with Figure 5.4.3a; or

(ii) return walls in accordance with Figure 5.4.3b.

Figure 5.4.3a: Support for internal walls—supported by ceiling structure

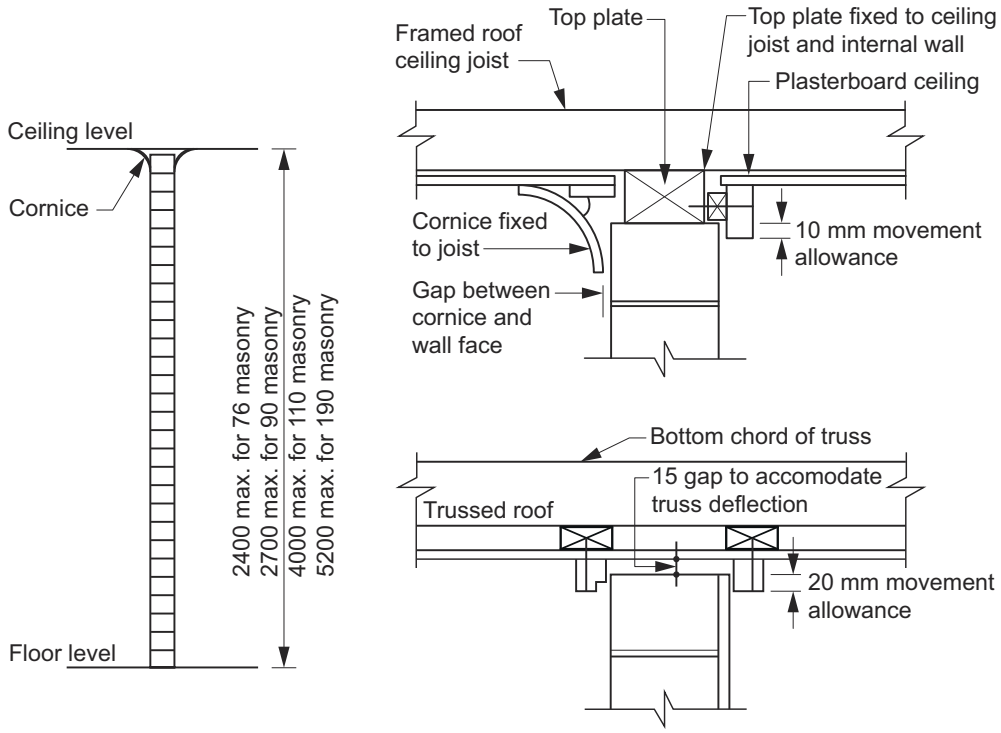

Figure Notes

(1) Timber joist must be fixed to top plate in accordance with H1D6(4).

(2) Fixing of top plate to masonry wall must be in accordance with 5.6.6.

Figure 5.4.3b: Support for internal walls—supported by return walls

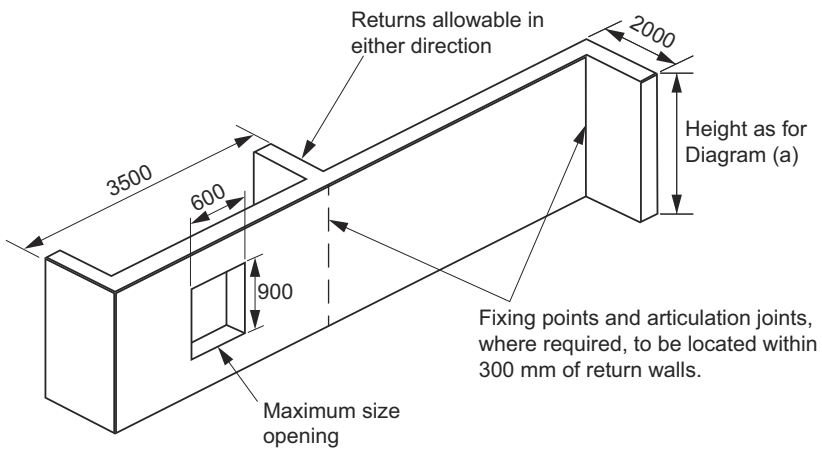

Figure Notes

(1) An opening of not more than 600 mm x 900 mm is allowed to internal walls without additional support.

(2) Openings larger than as described in Note 1 and door openings must be supported.

(3) The maximum allowable height for the wall is described in Figure 5.4.3a.

(4) Articulation joints must be in accordance with 5.6.8.

Explanatory Information

A full height door frame or stud fastened at the roof framing and tied to the wall at 300 mm centres can be considered equivalent to a return wall.

5.4.4 Vertical articulation joints

[New for 2022]

Vertical articulation joints must be provided in accordance with 5.6.8.

5.4.5 Damp-proof courses and flashing materials

[New for 2022]

Where required, *damp-proof courses* and *flashing* must be provided in accordance with 5.7.3 and 5.7.4.

Part 5.5 Isolated piers

5.5.1 Application

[New for 2022]

(1) Part 5.5 is subject to the limitations set out in H1D5(5)(c).

(2) Part 5.5 need not be complied with if H1D5(5)(a) or (b) are complied with.

5.5.2 Isolated piers supporting carports, verandahs, porches and similar roof structures

[2019: 3.3.6.2]

Isolated piers supporting carports, verandahs, porches and similar roof structures, or vehicle access door openings, which form part of the main roof, or are attached to a wall of a Class 1 building must—

(a) be not less than 290 x 290 mm in section; and

(b) be not more than 2.7 m high (see Figure 5.5.2); and

(c) be spaced at not more than 3 m centres (see Figure 5.5.2); and

(d) provide a bearing length of not less than 150 mm for any supported members; and

(e) comply with the relevant provisions of this Part.

Figure 5.5.2: Piers under main roof

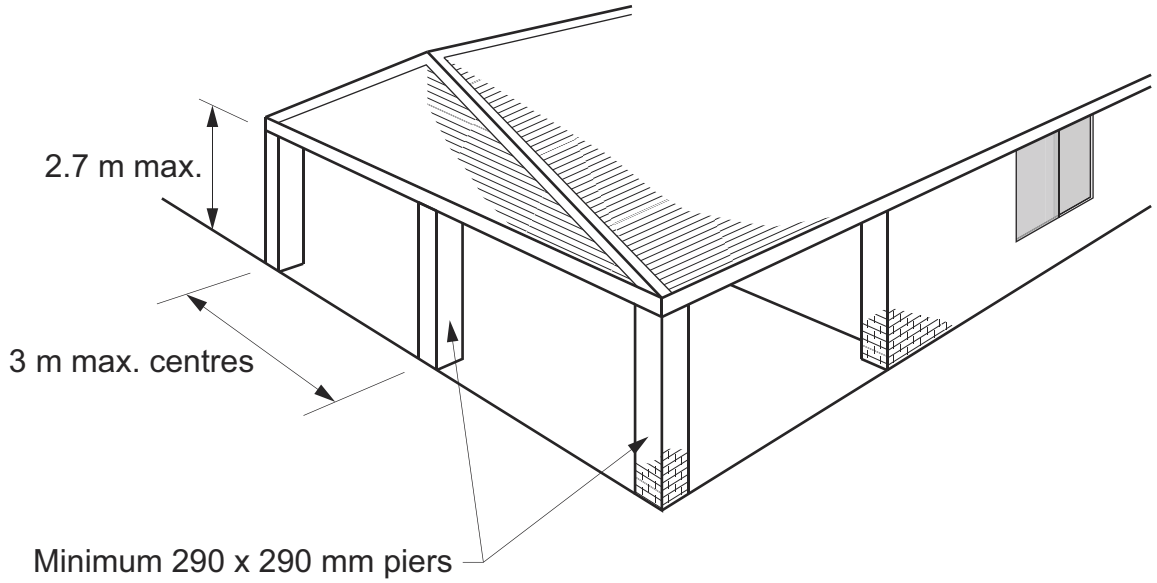

5.5.3 Isolated piers supporting tiled roofs

[2019: 3.3.6.3]

Isolated piers supporting tiled roofs must have—

(a) a built-in 30 x 0.8 mm galvanised steel strap fixed to the roof structure that extends the full height of the pier; and

(b) a 4.6 grade M12 galvanised steel rod which is cast into the footing when poured and looped and fixed around the galvanised steel strap *required* by (a).

5.5.4 Isolated piers supporting sheet roofs

[2019: 3.3.6.4]

Isolated piers supporting sheet roofs must have—

(a) a built-in 30 x 0.8 mm galvanised steel strap fixed to the roof structure extending the full height of the pier which is looped and fixed around a 4.6 grade 16 mm diameter galvanised steel rod cast into the footing when poured; or

(b) a 4.6 grade M16 galvanised steel rod cast into the footing, threaded at the top and extending the full height of the pier to connect to the roof structure.

5.5.5 Isolated piers for freestanding carports

[2019: 3.3.6.5]

Piers for freestanding carports must—

(a) be not less than 290 x 290 mm in section with the central core filled with 20 MPa concrete, or an exposure class mortar (see Table 5.6.3) complying with 5.6.3; and

(b) have the core reinforced with one Y16 steel reinforcing rod cast into the footing and extending the full height of the pier to connect to the roof structure.

5.5.6 Subfloor isolated piers

[2019: 3.3.6.6]

Subfloor isolated piers must be not less than 190 x 190 mm in section and comply with Figure 5.5.6 for height requirements.

Figure 5.5.6: Sub-floor isolated piers — maximum height and sectional details

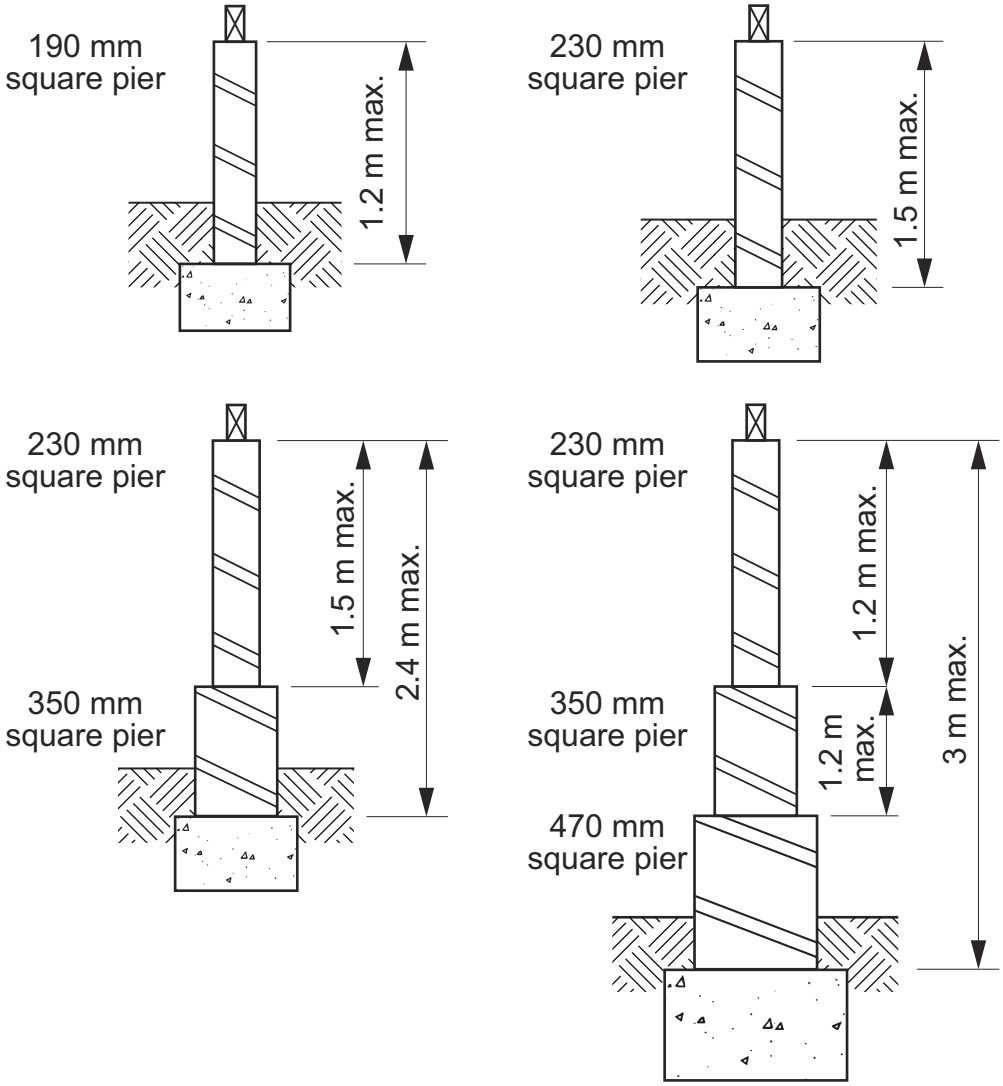

Part 5.6 Masonry components and accessories

5.6.1 Application

[New for 2022]

(1) Part 5.6 is subject to the limitations set out in H1D5(6)(c)(i), (ii) and (iii).

(2) Part 5.6 need not be complied with if H1D5(6)(a) or (b) are complied with.

5.6.2 Masonry units

[2019: 3.3.5.3]

(1) Masonry veneer masonry units must have a minimum compressive strength of—

(a) 3 MPa for solid or cored units; or

(b) 10 MPa for hollow units.

(2) *Cavity* masonry and single skin masonry units must have a minimum compressive strength of—

(a) 5 MPa for solid or cored units; or

(b) 10 MPa for hollow units.

(3) Masonry *cavity* walls must have a minimum leaf thickness of 90 mm.

(4) Subject to (5), masonry units must be—

(a) either clay or calcium silicate brick or concrete brick or block; and

(b) classified and used in the exposure conditions appropriate to their classification as described in (6).

(5) Mixing of panels consisting of clay masonry units with panels consisting of concrete or calcium silicate masonry units is not permitted unless—

(a) at vertical junctions, a control joint is installed; and

(b) at horizontal junctions between panels of different materials, a slip joint using a membrane similar to that used for *damp-proof courses* is installed.

(6) Masonry unit exposure classifications and corresponding masonry unit applications are as follows:

(a) Protected (P) masonry units are suitable for use in locations such as—

(i) internal walls; and

(ii) *external walls* that are coated or rendered; and

(iii) walls above *damp-proof courses* provided the wall is protected at the top by a roof, eaves, coping, topping or the like.

(b) General Purpose (GP) masonry units are suitable for use in all locations except those where 'Exposure class' (Exp) is *required*.

(c) Exposure class (Exp) masonry units are suitable for use in all locations including severe local conditions such as—

(i) below the *damp-proof course* in areas where walls are expected to be attacked by salts in the ground water or masonry itself (salt attack or salt damp); and

(ii) on sea fronts where walls are exposed to attack from salt spray; and

(iii) in heavily polluted areas subject to deposition of atmospheric pollution; and

(iv) under regular cyclic freeze and thaw conditions.

Explanatory Information

The exposure classification or durability of a masonry unit is a measure of its resistance to attack by soluble salts, either

in the ground or in the atmosphere. All masonry products manufactured are classified by their durability. The majority of uses will require either an Exposure class (Exp) product or a General Purpose (GP) product.

5.6.3 Mortar mixes

[2019: 3.3.5.4]

Mortar used for masonry construction must comply with AS 3700 or AS 4773 except that the mortar may be mixed by volume in the proportions stated in Table 5.6.3.

Table 5.6.3: Acceptable mortar mixes

Masonry unit exposure classification	Mortar mix by volume Note 1 Cement: lime: sand	
	General use	Suitable for concrete masonry Note 2
Protected	1:2:9	1:0:5
General purpose	1:1:6	1:0:5
Exposure class	1:0.5:4.5	1:0:4.2

Table Notes

(1) Additives may be used provided they comply with the appropriate specified rate.

(2) Mortar mixes for masonry require the use of methyl cellulose water thickener.

5.6.4 Mortar joints

[2019: 3.3.5.5]

(1) Unless otherwise specified, masonry bed and perpend joints must have a nominal thickness of 10 mm.

(2) Raked joints are not to be used in saline environments or areas subject to heavy industrial airborne pollution.

(3) Where raked joints are used the depth of raking must not be—

- (a) closer than 5 mm to any perforation in cored unit masonry or 20 mm in hollow unit masonry; or
- (b) more than 5 mm for masonry units at least 90 mm wide; or
- (c) more than 10 mm for masonry units at least 110 mm wide.

5.6.5 Wall ties

[2019: 3.3.5.10]

Masonry wall ties must—

- (a) comply with AS 2699.1 and—
  - (i) for masonry veneer walls be—
    - (A) a minimum of light duty veneer ties in areas where the *design wind speed* is not more than N2; and
    - (B) a minimum of medium duty veneer ties in areas where the *design wind speed* is more than N2; and
  - (ii) for *cavity* masonry walls be—
    - (A) a minimum of light duty *cavity* ties in areas where the *design wind speed* is N1; and
    - (B) a minimum of medium duty *cavity* ties in areas where the *design wind speed* is more than N1; and
  - (iii) where non-*engaged piers* are provided, piers must be tied to walls using medium duty ties; and
  - (iv) for monolithic or solid masonry construction be a minimum of medium duty ties; and
- (b) be spaced and fixed in accordance with Tables 5.6.5a, 5.6.5b and 5.6.5c (see also Figures 5.6.5a and 5.6.5b); and
- (c) be protected against corrosion in accordance with Table 5.6.5d.

Table 5.6.5a: Wall tie spacings in masonry veneer

Direction	Wall tie spacing	
	450 mm wall stud spacing	600 mm wall stud spacing
Horizontal	Maximum 450 mm	Maximum 600 mm
Vertical	Maximum 600 mm	Maximum 400 mm

Table Notes

Wall ties that are suitable for higher duties are also suitable for use in lower duty conditions.

Table 5.6.5b: Wall tie spacing in cavity and solid masonry

Direction	Wall tie spacing (maximum)	
	Cavity masonry	Solid or monolithic masonry
Horizontal	600 mm	400 mm
Vertical	600 mm	400 mm

Table Notes

Wall ties that are suitable for higher duties are also suitable for use in lower duty conditions.

Table 5.6.5c: Placement of wall ties

Location	Placement of wall ties
Unsupported panel sides and edges of openings	Within 300 mm of panel side or edge
Top of veneer panels and top of panels under openings	Within 300 mm or two courses (whichever is the lesser) of the top of veneer
Bottom of veneer panel in masonry rebate sealed with liquid applied *damp-proof course*	Within 300 mm or two courses (whichever is the lesser) from the bottom of the veneer
Bottom of veneer panel supported on steel lintel	
Bottom of veneer panel in masonry rebate with membrane *damp-proof course*	In each of the first two courses
Intersection of *internal walls* and *external walls*	350 mm vertically or 3-4 courses
Where articulation joints occur	At both sides of the articulation joint within 300 mm from the joint
Engaged piers	Within 200 mm of the top of the pier

Table Notes

(1) Ties to be embedded a minimum of 50 mm into each masonry leaf.

(2) Masonry wall ties must be installed in such a manner as to prevent moisture travelling along the tie to the inner leaf of masonry or the frame.

Table 5.6.5d: Corrosion protection for wall ties

Exposure condition	Tie specification (minimum corrosion protection)
Areas less than 1km from *breaking surf*; or less than 100 m from salt water not subject to *breaking surf*; or within heavy industrial areas.	Grade 316L stainless steel; or engineered polymer complying with the requirements of AS 2699.1.
Areas 1km or more but less than 10km from *breaking surf*; or 100m or more but less than 1km from salt water not subject to *breaking surf*.	Sheet steel and bar ties galvanised after manufacture - 470 g/m^2 on each side; or galvanised wire ties - 470 g/m^2 coating mass; or Grade 304L stainless steel.
All other areas	Galvanised sheet steel - 300 g/m^2 coating on each side; or sheet steel ties galvanised after manufacture - 300 g/m^2 on each side.

Figure 5.6.5a: Wall tie details (lowset)

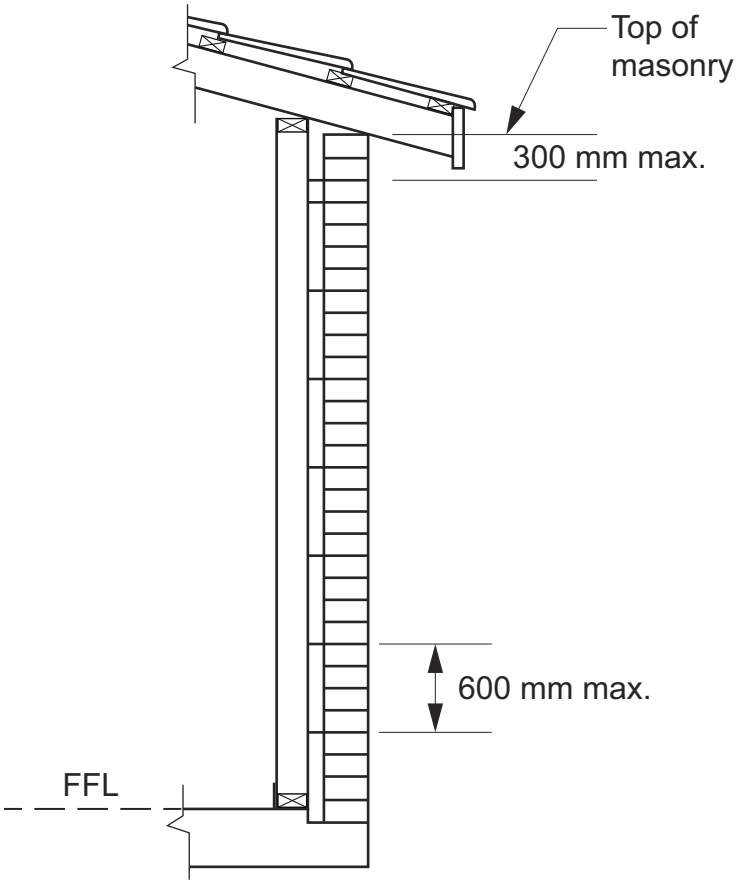

Figure 5.6.5b: Wall tie details (highset)

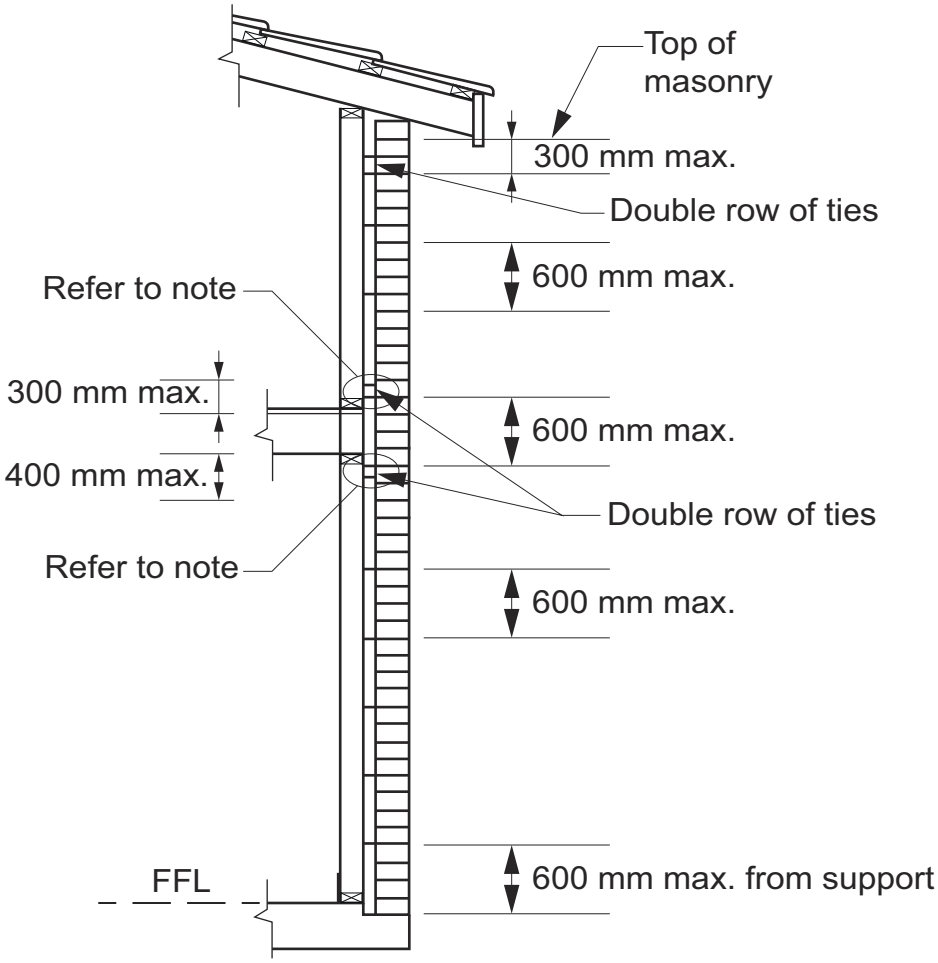

Figure Notes

Where wall ties are *required*, they must be placed in adjacent courses (as shown) or must be placed in the same course on each side of the stud.

Explanatory Information

Wall ties that are suitable for use in a more severe exposure condition are also suitable for use in less severe exposure conditions, i.e. stainless steel and engineered polymer ties are suitable for use in all conditions and 470g/m^2 galvanised ties can be used in all exposure conditions except the most severe.

5.6.6 Fixing straps and tie-down systems

[New for 2022]

(1) Timber door and *window* frames abutting *cavity* masonry must be fixed with 300 mm long 30 mm x 0.8 mm kinked galvanised steel straps—

(a) fixed to the back of frames; and

(b) set into courses not less than 150 mm at not more than 400 mm intervals.

(2) For areas with a wind class of N1 or N2 and a building width from outside wall to outside wall of not more than 10 m in the direction of the roof span (see Figure 5.6.6a), sheet metal and tiled roofs must be tied down using one of the following methods:

(a) 30 mm x 0.8 mm galvanised steel straps at not more than 1.2 m centres and corresponding with truss or rafter positions, looped around 10 mm diameter galvanised mild steel rods—

(i) built-in across the *cavity* at a course not less than 900 mm below the top of the wall; and

(ii) embedded not less than 50 mm into each leaf.

(b) 30 mm x 1 mm galvanised steel straps at not more than 1.2 m centres and corresponding with truss or rafter positions, built-in to masonry inner leaf not less than 50 mm and at a course not less than 900 mm below the top of the wall (see Figure 5.6.6b).

(3) Roof framing supporting tiled roofs on single leaf *unreinforced masonry* walls with *engaged piers* or return walls must have—

(a) a built-in 30 mm x 0.8 mm galvanised steel strap fixed to the roof structure that extends the full height of the *engaged pier* or return wall; and

(b) a 4.6 grade M12 galvanised steel rod which is cast into the footing when poured and looped and fixed around the galvanised steel strap *required* by (a) (see Figure 5.6.6c).

(4) Roof framing supporting sheet roofs on single leaf *unreinforced masonry* with *engaged piers* or return walls must have—

(a) a built-in 30 mm x 0.8 mm galvanised steel strap fixed to the roof structure extending the full height of the *engaged pier* or return wall which is looped and fixed around a 4.6 grade 16 mm diameter galvanised steel rod cast into the footing when poured; or

(b) a 4.6 grade M16 galvanised steel rod cast into the footing, threaded at the top and extending the full height of the pier or return wall to connect to the roof structure.

Figure 5.6.6a: Building width

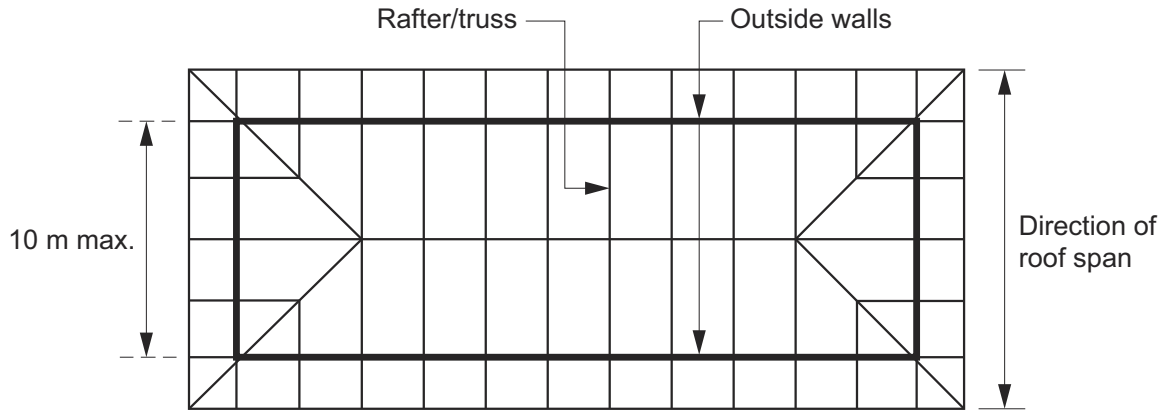

Plan view

Figure 5.6.6b: Suitable tie-down strap details for cavity masonry

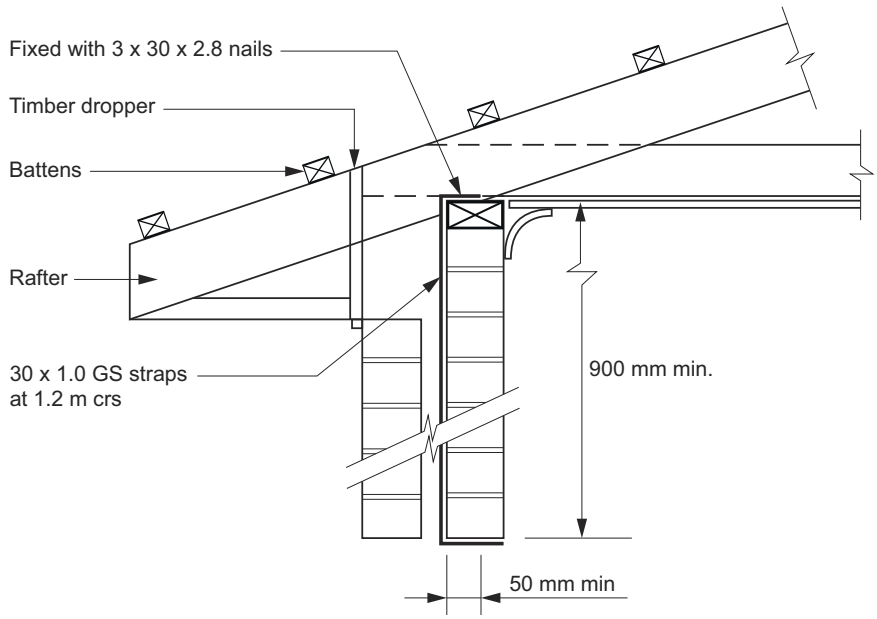

Figure 5.6.6c: Typical tie-down to single leaf unreinforced masonry

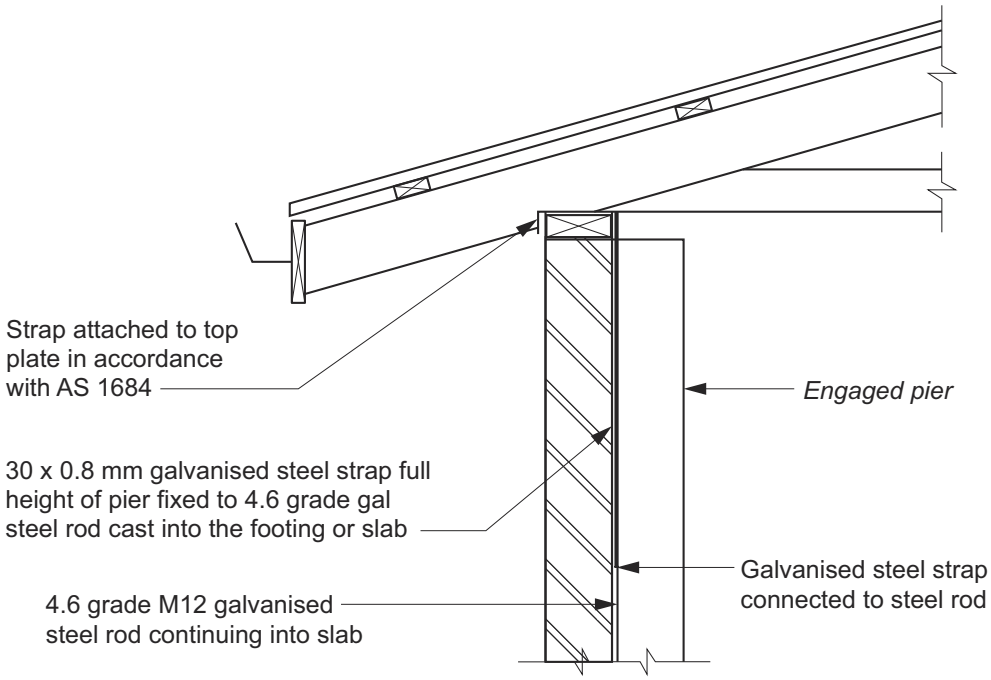

Explanatory Information

Roof tie-down over openings more than 1200 mm wide in masonry construction must be specifically designed in accordance with relevant material and structural design standards.

5.6.7 Lintels

[2019: 3.3.5.12]

Where a lintel is *required* it must comply with the following:

(a) Steel lintels must comply with this Part or H1D6(3).

(b) Steel lintels must—

(i) be sized in accordance with Table 5.6.7a; and

(ii) be installed with the long leg of lintel angle vertical; and

(iii) be wide enough so that the masonry does not overhang the horizontal leg of the lintel by more than 25 mm; and

(iv) not support masonry more than 3 m in height when measured above the opening; and

(v) have a minimum bearing length at each end of the lintel of—

(A) for clear spans not more than 1 m - 100 mm; or

(B) for clear spans more than 1 m - 150 mm (See Figure 5.6.7); and

(vi) have a minimum of three courses of masonry over openings; and

(vii) comply with the corrosion protection requirements of Table 5.6.7b.

Table 5.6.7a: Masonry lintel sizes

Lintel	Maximum clear span of lintel (mm): ≤ 600 mm of masonry over opening	Maximum clear span of lintel (mm): > 600 mm of masonry over opening
Flat 75 x 8	700	700
Flat 100 x 10	900	900
Angle 90 x 90 x 6EA	3000	2650
Angle 90 x 90 x 8EA	3200	2800
Angle 100 x 100 x 6EA	3350	2900
Angle 100 x 100 x 8EA	3600	3040
Angle 150 x 90 x 8UA	4200	3850

Table Notes

The lintels described in this Table must be not less than grade 300 MPa in accordance with AS 4100.

Table 5.6.7b: Corrosion protection – Lintels

Durability class of lintel in accordance with AS 2699.3 Note 1	Material or protective requirements in accordance with AS 2699.3 Note 1
R1, R2	Hot dip galvanised with a minimum average coating thickness of 300 g/m^2; or stainless steel 316L
R3	Hot dip galvanised with a minimum average coating thickness of 600 g/m^2; or stainless steel 316L
R4	Stainless steel 316L

Table Notes

(1) AS 2699.3 contains information on the corrosivity category locations in Australia and provides a method for determining coating thickness for lintels.

(2) Additional decorative coatings can be applied, but must not be considered for the purpose of satisfying the requirements of this Table.

(3) Any lintel with a coating that is modified, i.e. by cutting, welding, or where damaged, must have the coating restored to provide an equivalent level of protection provided by the original coating.

Figure 5.6.7: Lintel installation

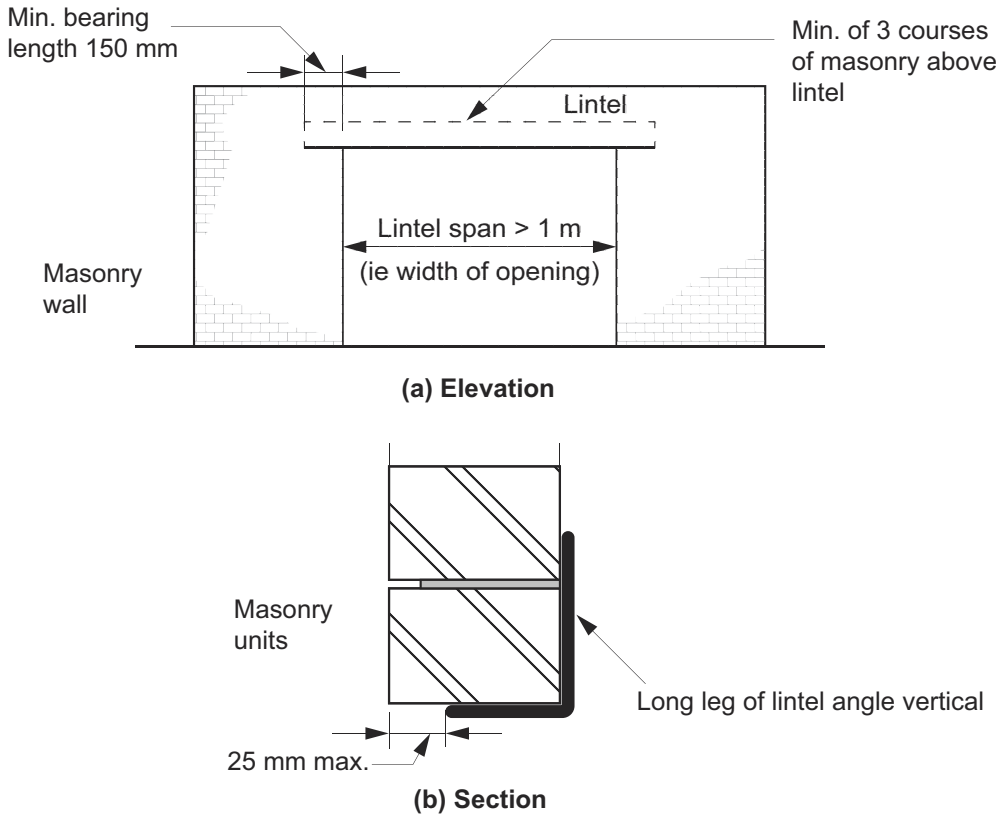

5.6.8 Vertical articulation joints

[2019: 3.3.5.13]

(1) Vertical articulation joints must be provided in masonry walls in accordance with (2), except in walls constructed on *sites* where the soil classification is A or S (see 4.2.2).

(2) Articulation joints between masonry elements must have a width of not less than 10 mm and be provided (see Figures 5.6.8a and 5.6.8b)—

(a) in straight, continuous walls with openings less than 900 mm x 900 mm or walls without openings — at not more than 6 m centres and within 4.5 m, but not closer than 470 mm of all corners; and

(b) in straight, continuous walls with openings more than 900 mm x 900 mm — at not more than 5 m centres and located so that they are not more than 1.2 m away from openings; and

(c) where the height of the wall changes by more than 20% — at the position of change in height; and

(d) where a wall changes in thickness; and

(e) at control or construction joints in footings or slabs; and

(f) at junctions of walls constructed of different masonry materials.

(3) Articulation joints must not be located adjacent to arched openings.

(4) Articulation joints must be filled with flexible sealant that is supported during installation by—

(a) a compressible foam or polystyrene filler (see Figures 5.6.8d and 5.6.8e); or

(b) a purpose made backer rod (see Figures 5.6.8c, 5.6.8d, 5.6.8e and 5.6.8f).

Figure 5.6.8a: Example of vertical articulation joint locations in plan view

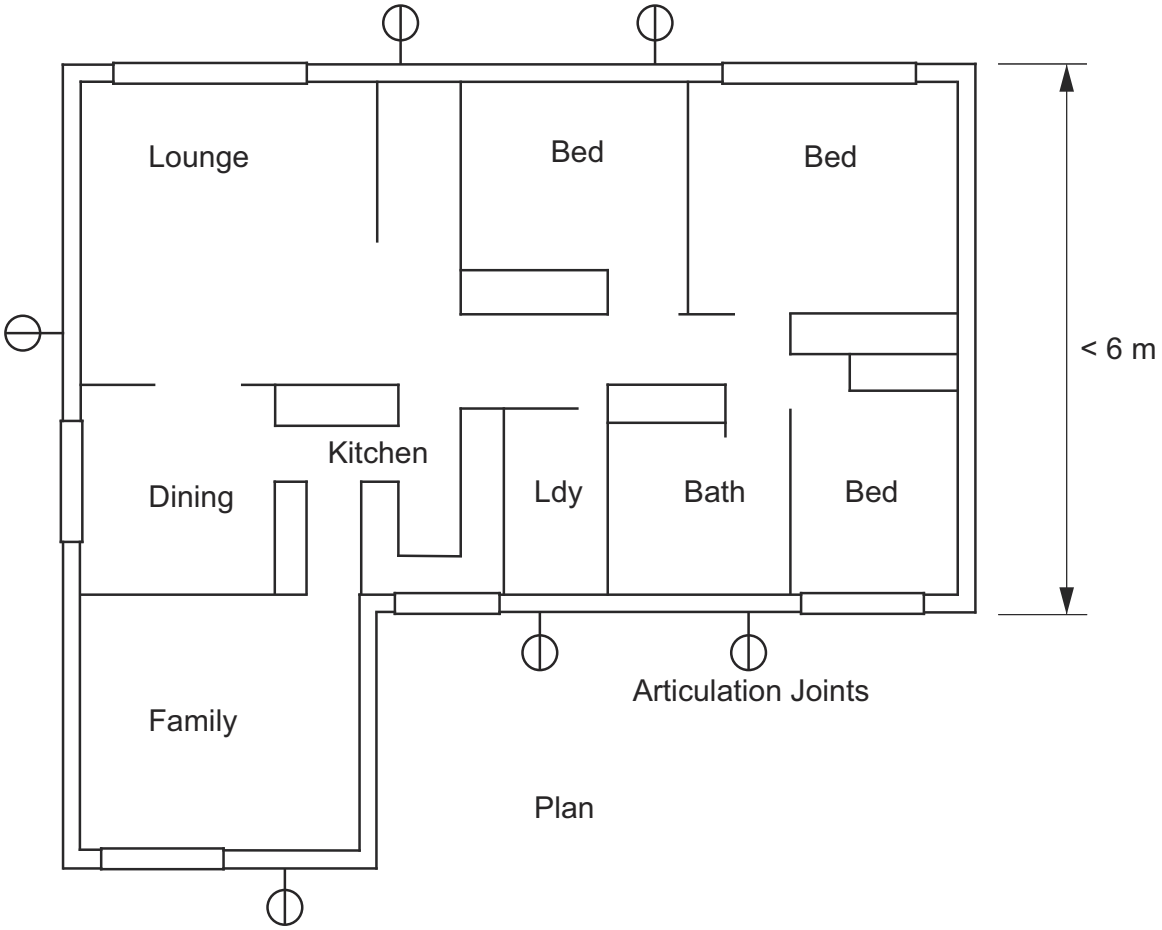

Figure 5.6.8b: Vertical articulation joints

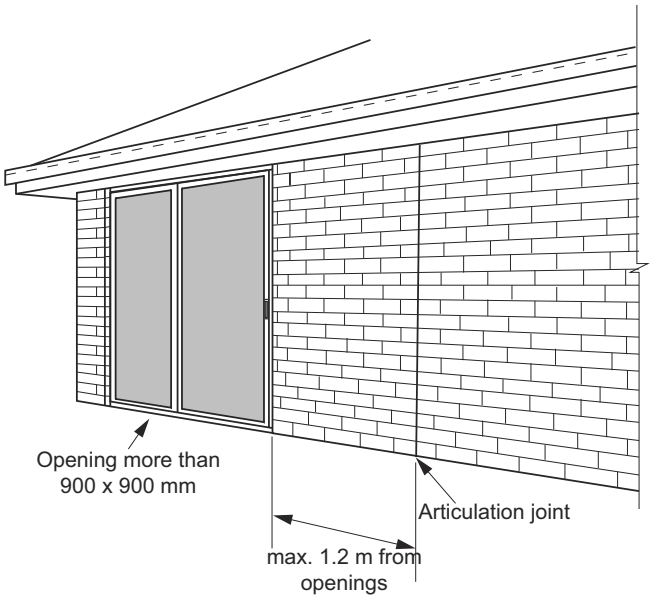

Figure 5.6.8c: Articulation joint with backer rod and sealant—single skin masonry and masonry veneer walls

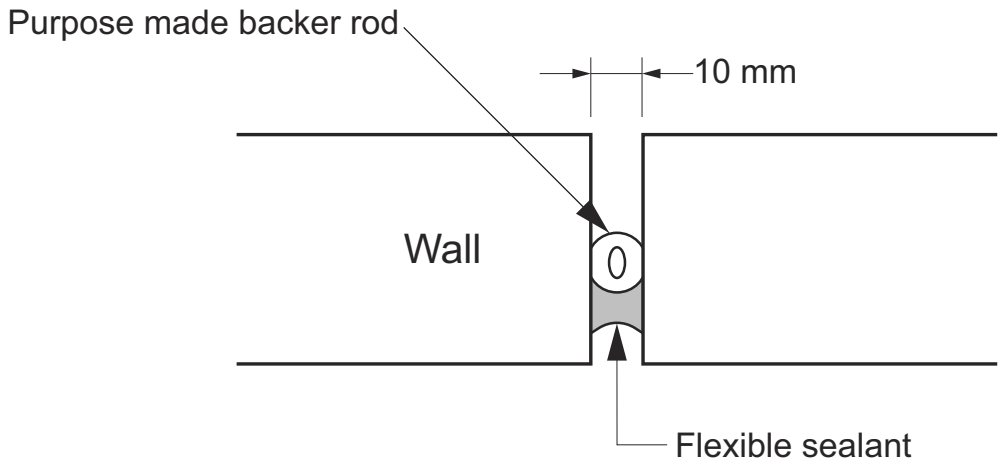

Figure 5.6.8d: Articulation joint in unreinforced single leaf masonry wall with compressed foam

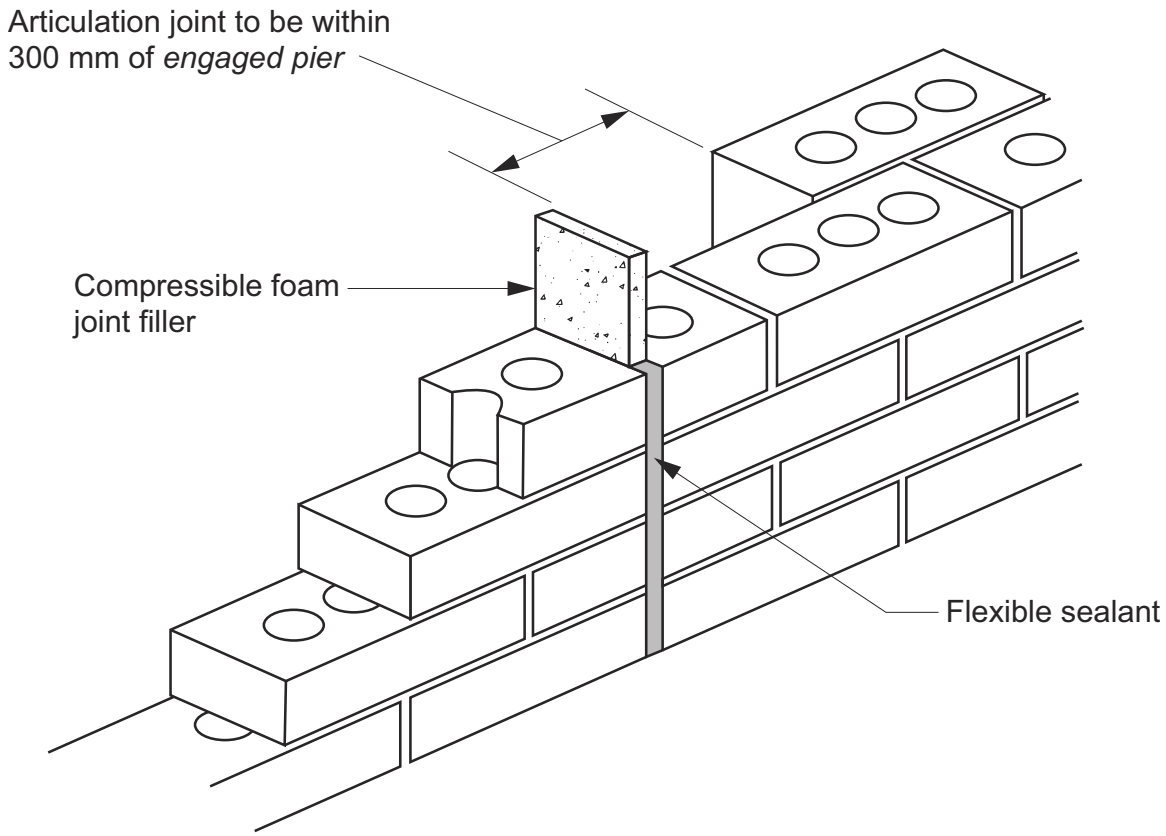

Figure 5.6.8e: Articulation joint in unreinforced masonry veneer wall with compressed foam

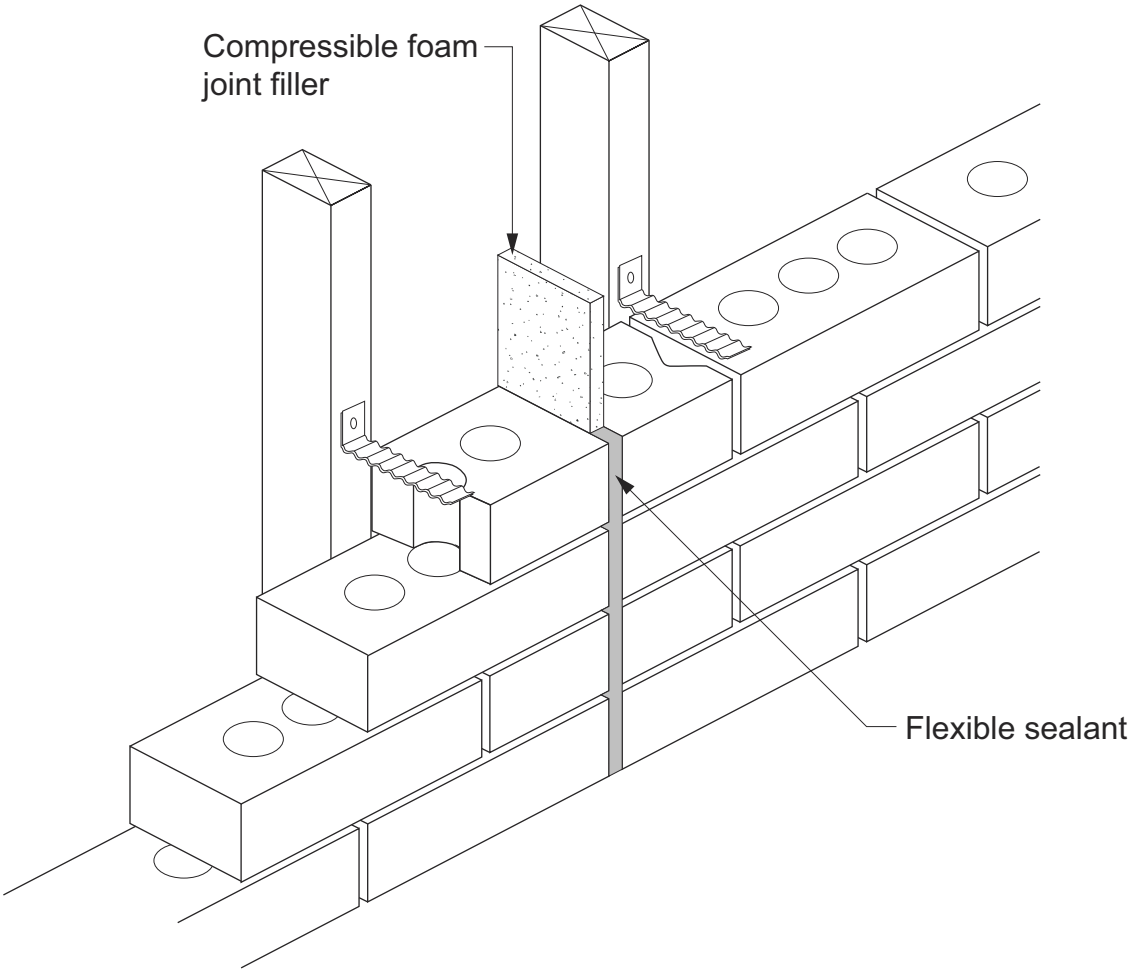

Figure 5.6.8f: Articulation joint in cavity masonry wall

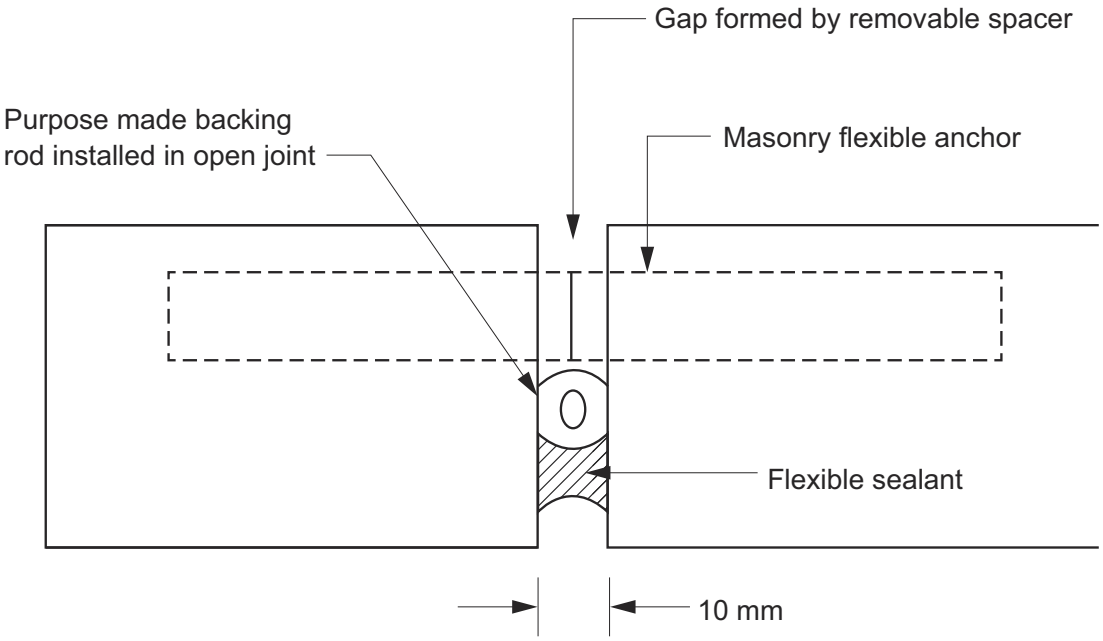

(a) Backer rod joint detail

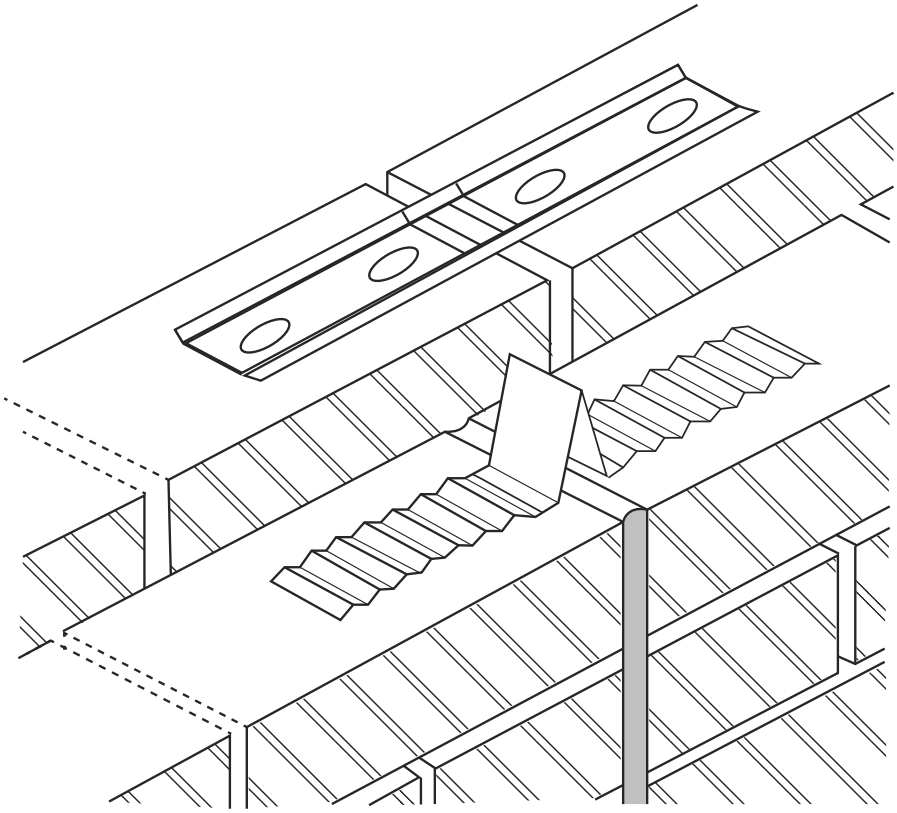

(b) Cavity wall extendable anchors

Explanatory Information

For the purposes of 5.6.8, the vertical articulation joint also performs the function of a contraction or expansion joint.

Part 5.7 Weatherproofing of masonry

5.7.1 Application

[New for 2022]

(1) Part 5.7 applies subject to the limitation set out in H2D4(2)(c).

(2) Part 5.7 need not be complied with if H2D4(2)(a) or (b) are complied with.

5.7.2 Cavities

[2019: 3.3.5.6]

(1) For masonry veneer, the clear width of a *cavity* between the masonry veneer and the exterior face of the supporting frame must not be—

  (a) less than 25 mm wide; and

  (b) more than 75 mm wide.

(2) For *cavity* masonry, the clear width of a *cavity* between the inner and outer masonry leaves must not be—

  (a) less than 35 mm; and

  (b) more than 75 mm.

(3) Where masonry veneer and *cavity* masonry in (1) and (2) are constructed on a slab-on-ground, the *cavity* must be drained to the outside in accordance with 5.7.5.

(4) The exterior masonry leaf must not overhang the edge of the slab by more than 15 mm.

Explanatory Information

The 25 mm clear width of the *cavity* needs to be maintained regardless of any wall *membranes*, sheet bracing or services installed to the supporting frame.

Where mullions are located within a *cavity*, a vertical *damp-proof course* must be placed between the outer masonry leaf and the mullion to prevent moisture penetration.

5.7.3 Damp-proof courses and flashings – material

[2019: 3.3.5.7]

Damp-proof courses and *flashings* must consist of—

  (a) a material that complies with AS/NZS 2904; or

  (b) embossed black polyethylene film of high impact resistance and low slip, with a nominal thickness of 0.5 mm prior to embossing, and comply with clause 7.6 of AS/NZS 2904; or

  (c) polyethylene coated metal, that has an aluminium core of not less than 0.1 mm thick, is coated both sides with bitumen adhesive enclosed in polyethylene film of not less than 0.1 mm thick on each face, and has a nominal total thickness of not less than 0.5 mm prior to embossing; or

  (d) bitumen impregnated materials of not less than 2.5 mm thick, that comply with clause 7.5 of AS/NZS 2904; or

  (e) termite sheet materials complying with Part 3.4 (with no penetrations) serving the purpose of a *damp-proof course* and/or *flashing* that is continuous through the wall or pier.

5.7.4 Damp-proof courses and flashings – installation

[2019: 3.3.5.8]

(1) *Damp-proof courses* and *flashings* must be—

(a) located so as to form a continuous damp-proofing barrier—

(i) around the bottom perimeter of walls where constructed on a concrete slab; and

(ii) in walls and piers below suspended floors; and

(iii) where a masonry wall passes through a roof; and

(iv) where a roof abuts an external masonry wall; and

(v) to the bottom and tops of *windows* and doors and the like in accordance with (3), except a *damp-proof course* or a *flashing* need not be provided to the top of a *window* or door where the opening is protected by an eave of a width more than 3 times the height of the masonry veneer above the opening; and

(b) continuous through the wall or pier and be visible from the outside face of the wall.

(2) The location of a *damp-proof course*, or *flashing* serving as a *damp-proof course*, must be not less than—

(a) 150 mm above the adjacent ground level; or

(b) 75 mm above the finished surface level of adjacent paved, concreted or landscaped areas that slope away from the wall; or

(c) 50 mm above finished paved, concreted or landscaped areas complying with 3.3.3(b)(ii) and protected from the direct effects of the weather by a carport, verandah or the like; or

(d) in *low rainfall intensity areas*—

(i) 15 mm above finished paved, concreted or landscaped areas; or

(ii) 0 mm above finished paved, concreted or landscaped areas if the *damp-proof course* is protected from the direct effects of the weather by a carport, verandah or the like.

(3) Sill and head *flashings* serving openings must be—

(a) installed so that the *flashing* extends not less than 150 mm beyond the reveals on each side of the opening; and

(b) located not more than—

(i) one course below the sill brick course; and

(ii) 300 mm above the opening; and

(c) turned up in the *cavity* not less than 150 mm above the opening; and

(d) embedded not less than 30 mm into—

(i) for masonry veneer, the masonry leaf; and

(ii) for *cavity* masonry, the outer masonry leaf; and

(e) attached to the *window* or wall framing.

5.7.5 Weepholes

[2019: 3.3.5.9]

(1) Except where excluded by (2), open perpend joints (weepholes) must be created in the course immediately above any *flashing* (including above any *damp-proof course* acting as a *flashing*) and be—

(a) a minimum of 50 mm in height, by the width of the vertical mortar joint; and

(b) at not more than 1.2 m centres; and

(2) Weepholes are not *required* in the following locations:

(a) Where head openings are less than 1.2 m wide.

(b) Beneath *window* and door sills.

(c) Where the level of the external impervious surface is elevated for the purpose of providing step-free access *required* by H8P1.

5.7.6 Weatherproofing for single leaf masonry walls

[New for 2022]

(1) A *waterproof* coating material must be applied to all external single skin masonry walls in accordance with the following:

(a) The coating must extend from the uppermost exposed part of the wall—

(i) to a level adjacent to the internal finished floor level, if the external masonry wall leaf overhangs the edge of the slab by not less than 10 mm; or

(ii) 50 mm below the internal floor level if no edge overhang is provided.

(b) Acceptable external *waterproof* finishes are—

(i) three coats of 100% acrylic based exterior quality gloss paint; or

(ii) one complete coat of cement based paint and two coats of 100% acrylic based exterior quality gloss paint; or

(iii) clear water repellent, provided the wall is protected by a roof overhang of not less than 1500 mm.

(2) *Windows* must be installed in accordance with Figure 5.7.6.

Figure 5.7.6: Typical window installation for unreinforced single skin masonry

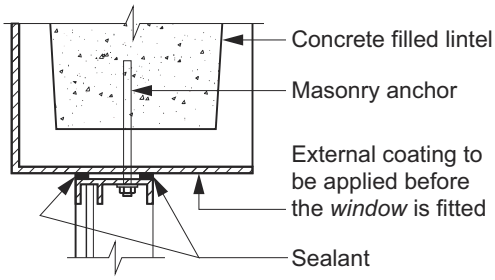

(a) Head fixing

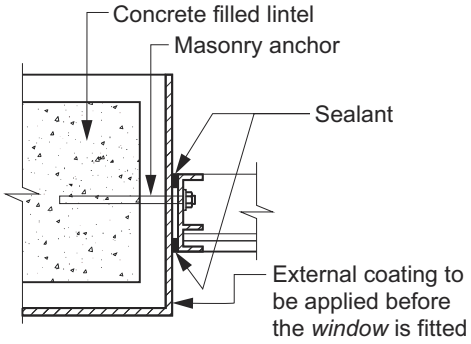

(b) Jamb fixing

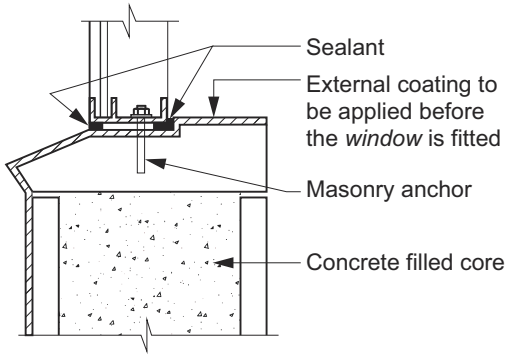

(d) Sill fixing - 2

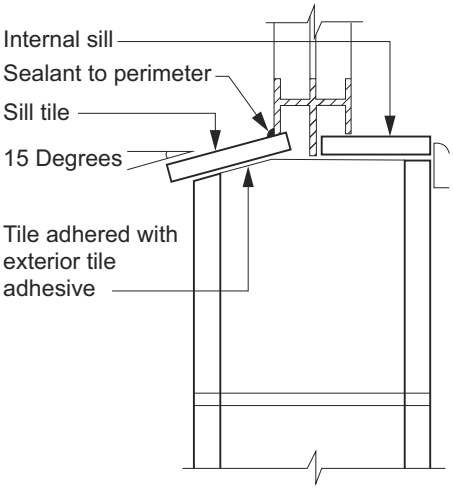

(c) Sill fixing - 1

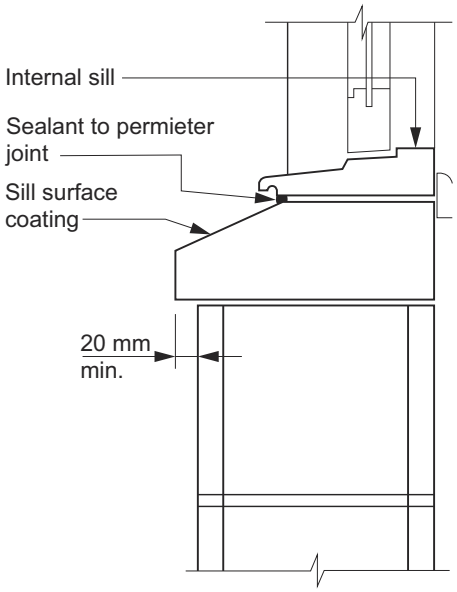

(e) Sill fixing - 3

6 Framing

Part 6.1 **Scope and application of Section 6**

6.1.1 Scope

6.1.2 Application

Part 6.2 **Subfloor ventilation**

6.2.1 Subfloor ventilation

Part 6.3 **Structural steel members**

6.3.1 Application

6.3.2 Structural steel members

6.3.3 Bearers

6.3.4 Strutting beams

6.3.5 Lintels

6.3.6 Columns

6.3.7 Fixings and bearing for structural steel members

6.3.8 Penetrations through structural steel members

6.3.9 Corrosion protection

Part 6.1 Scope and application of Section 6

6.1.1 Scope

[New for 2022]

(1) This Section sets out the *Deemed-to-Satisfy Provisions* for—

(a) subfloor ventilation (see Part 6.2); and

(b) structural steel members (see Part 6.3).

(2) For other framing provisions not included in this Section, refer to the following *Deemed-to-Satisfy Provisions* in NCC Volume Two:

(a) Steel framing (see H1D6(3)).

(b) Timber framing (see H1D6(4)).

(c) Use of structural software (see H1D6(7)).

Explanatory Information

Part 6.2 applies to the subfloor space of all suspended floors of a building or deck, including but not limited to, timber and steel-framed subfloors and suspended concrete slabs.

6.1.2 Application

[New for 2022]

The application of this Section is subject to the following:

(a) The Governing Requirements of NCC Volume Two.

(b) The State and Territory variations, additions and deletions contained in the Schedules to the ABCB Housing Provisions and NCC Volume Two.

Explanatory Information

In NCC 2019, the content of Section 6 of the ABCB Housing Provisions (other than content added in NCC 2022 or later) was contained in the acceptable construction practices for Parts 3.4.1 and 3.4.4 of NCC 2019 Volume Two.

NCC 2019 Volume Two did not include an acceptable construction practice for Parts 3.4.2 or 3.4.3.

Part 6.2 Subfloor ventilation

6.2.1 Subfloor ventilation

[2019: 3.4.1.2]

(1) Subfloor spaces must—

(a) be provided with openings in *external walls* and internal subfloor walls in accordance with Table 6.2.1a for the climatic zones given in Figure 6.2.1a; and

(b) have clearance between the ground surface and the underside of the lowest horizontal member in the subfloor in accordance with Table 6.2.1b (see Figure 6.2.1b and Figure 6.2.1c).

(2) In addition to (1), a subfloor space must—

(a) be cleared of all building debris and vegetation; and

(b) have the ground beneath the suspended floor graded in accordance with 3.3.3; and

(c) contain no dead air spaces; and

(d) have openings evenly spaced as far as practicable (see Figure 6.2.1d); and

(e) have openings placed not more than 600 mm in from corners.

(3) In double leaf masonry walls, openings specified in (1) must be provided in both leaves of the masonry, with openings being aligned to allow an unobstructed flow of air (see Figure 6.2.1d).

(4) Openings in internal subfloor walls specified in (1) must have an unobstructed area equivalent to that *required* for the adjacent external openings (see Figure 6.2.1d).

(5) Where the ground or subfloor space is excessively damp or subject to frequent flooding, in addition to the requirements of (1) to (4)—

(a) the subfloor ventilation *required* in (1) must be increased by 50%; or

(b) the ground within the subfloor space must be sealed with an impervious *membrane*; or

(c) subfloor framing must be—

(i) where above ground — above ground durability Class 1 or 2 timbers or H3 preservative treated timbers in accordance with AS 1684.2, AS 1684.3 or AS 1684.4; or

(ii) where in-ground — in-ground durability Class 1 or 2 timbers or H5 preservative treated timbers in accordance with AS 1684.2, AS 1684.3 or AS 1684.4; or

(iii) steel in accordance with NASH Standard 'Residential and Low-Rise Steel Framing' Part 2.

Table 6.2.1a: Subfloor openings

Climatic zone (see Figure 6.2.1a)	Minimum aggregate subfloor ventilation openings with no *membrane* (mm^2/m of wall)	Minimum aggregate subfloor ventilation openings with ground sealed with impervious *membrane* (mm^2/m of wall)
A	2000	1000
B	4000	2000
C	6000	3000

Table Notes

In situations where openings in *external walls* and internal subfloor walls, including *separating walls*, are not able to be provided, additional measures must be provided to ensure that the overall level of ventilation of the subfloor space is maintained. This may include measures similar to those in 6.2.1(5) i.e. providing durability class timbers, or having the ground sealed in the subfloor space with an impervious *membrane*.

Table 6.2.1b: Ground clearance

Climatic zone (see Figure 6.2.1a)	Minimum ground clearance height where termite inspection or management system is not *required* (mm)	Minimum ground clearance height where termite inspection is *required* (mm)
A, B and C	150	400

Table Notes

(1) 400 mm clearance *required* only where termite management systems are installed that need to be inspected (see Part 2.2.4).

(2) On sloping *sites* the 400 mm clearance *required* by (1) may be reduced to 150 mm within 2 m of *external walls* in accordance with Figure 6.2.1b.

Figure 6.2.1a: Climatic zones based on relative humidity

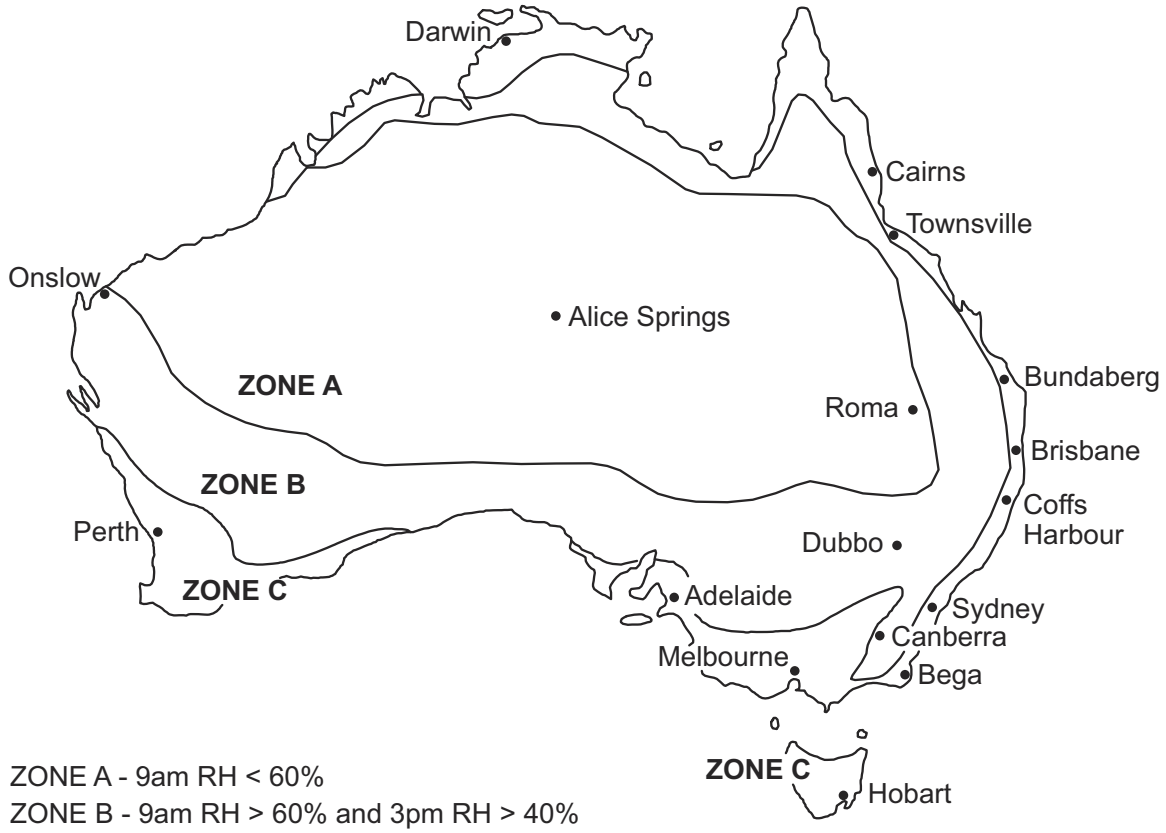

ZONE A - 9am RH < 60%
ZONE B - 9am RH > 60% and 3pm RH > 40%
ZONE C - 9am RH > 70% and 3pm RH > 60%
RH = Relative Humidity

Figure 6.2.1b: Subfloor clearance requirements

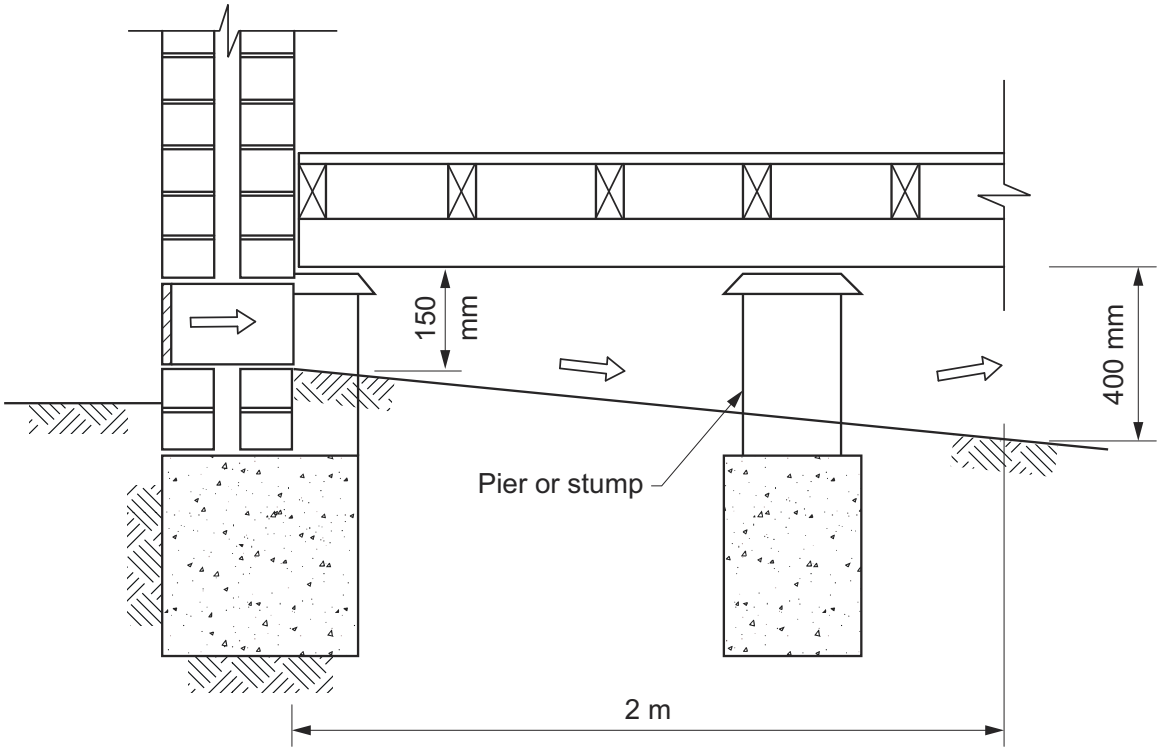

Figure Notes

See notes to Tables 6.2.1a and 6.2.1b.

Figure 6.2.1c: Subfloor clearance requirements – detail

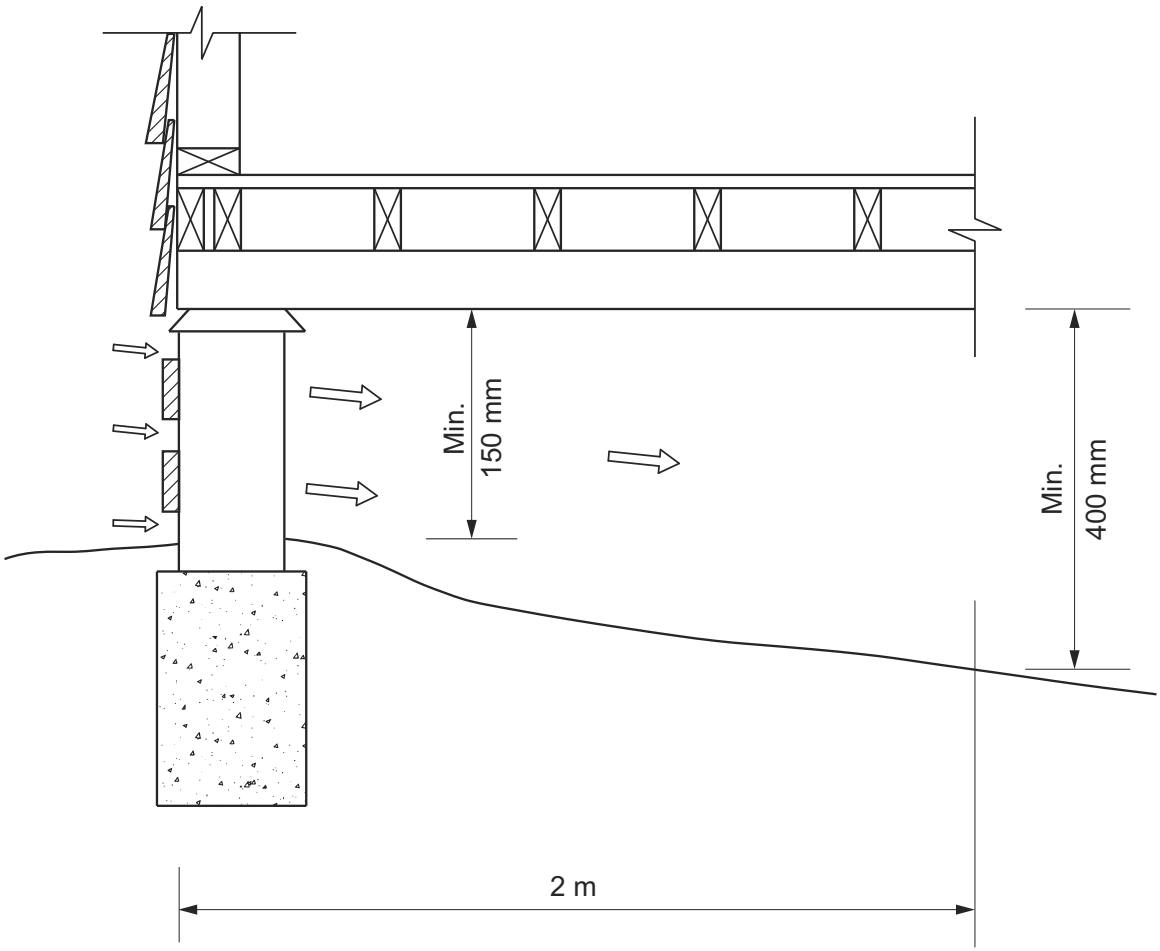

Figure Notes

See notes to Tables 6.2.1a and 6.2.1b.

Figure 6.2.1d: Typical subfloor ventilation details — typical cross ventilation of subfloor area

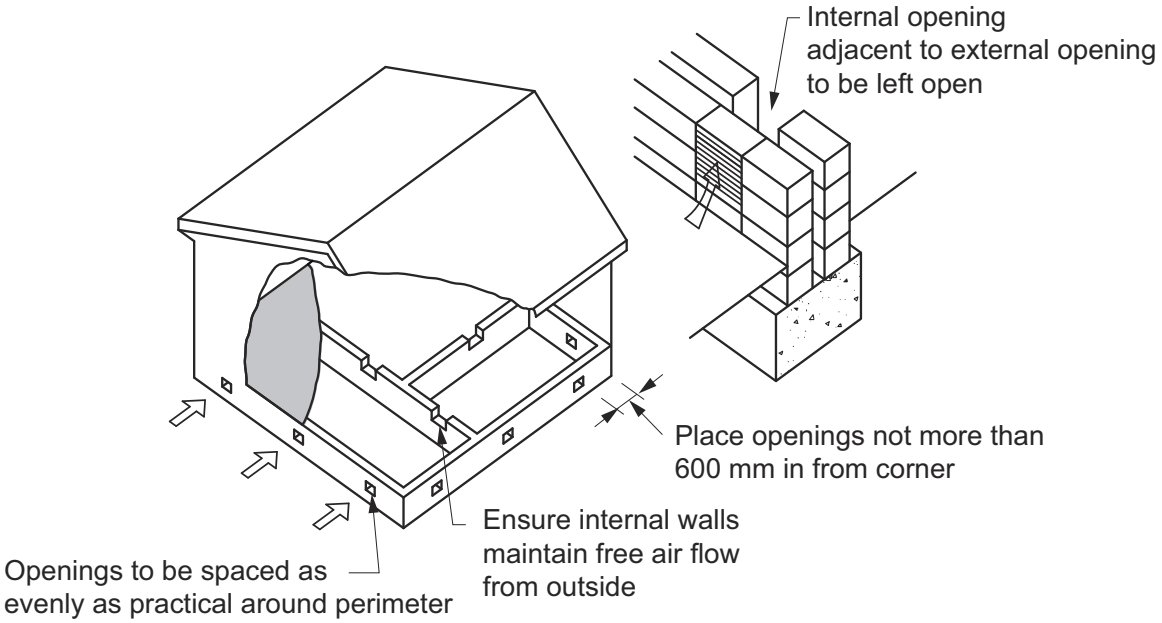

Explanatory Information

Subfloor ventilation is cross ventilation of the subfloor space between the underside of the subfloor and the ground surface under a building.

Ground moisture rising into or entering the subfloor space can create a damp environment which encourages timber rot, fungus growth and the potential for termite activity. Subfloor ventilation increases air flow, reducing any damaging water vapour in the subfloor space.

Factors that can affect achieving satisfactory levels of subfloor ventilation include height above ground, prevailing breezes (air transfer), differential temperature and humidity between the subfloor and the external environment and good building practice.

The amount of subfloor ventilation *required* for a building is related to the relative humidity likely to be encountered in that location. Figure 6.2.1a shows three broad climatic zones based on the prevailing relative humidity and includes a description of the relative humidity conditions which define each zone. If reliable weather data is available, these descriptions may be useful in determining which zone a particular location is in.

The zones shown in Figure 6.2.1a were determined by analysis of the average relative humidity at 9 am and 3 pm in January and July. The season with the highest relative humidity is used. Generally this will be July for southern Australia and January for northern Australia.

Table 6.2.1a and Table 6.2.1b specify the minimum amount of subfloor ventilation openings and height of subfloor framing members above ground level for the three climatic zones illustrated in Figure 6.2.1a. The table allows subfloor ventilation rates to be halved if the ground within the subfloor space is sealed by an impervious *membrane* because humidity levels in the space will not be affected by moisture from the soil.

Clause 6.2.1(5) specifies additional requirements for preventing deterioration of subfloor members where the ground or subfloor space is excessively damp, as would occur in areas with high water tables, poor drainage or in areas frequently affected by flooding or water inundation.

Part 6.3 Structural steel members

6.3.1 Application

[New for 2022]

(1) Part 6.3, other than clause 6.3.4, applies subject to the limitations set out in H1D6(6).

(2) Part 6.3 need not be complied with if H1D6(5)(a) or (b) are complied with.

6.3.2 Structural steel members

[2019: 3.4.4.2]

(1) Structural steel members may be used as follows:

(a) Bearers supporting a timber floor or non-*loadbearing* stud wall — in accordance with 6.3.3.

(b) Strutting beams supporting roof and ceiling loads — in accordance with 6.3.4.

(c) Lintels supporting roof, ceiling, frame and timber floor — in accordance with 6.3.5.

(d) Columns — in accordance with 6.3.6.

(2) Structural steel members in (1)(a), (b) and (c) must have a minimum nominal yield strength of 250 MPa.

(3) The yield strength of structural steel members in (1)(d) is nominated in 6.3.6.

(4) Structural steel members described in this Part must be protected against corrosion in accordance with 6.3.9.

6.3.3 Bearers

[New for 2022]

Structural steel bearers must comply with the following:

(a) Effective bearer spacing must be determined in accordance with—

(i) for single span joists — Table H1D6a and Figure H1D6d; and

(ii) for continuous span joists — Table H1D6b and Figure H1D6e.

(b) Maximum acceptable bearer spans must be determined in accordance with—

(i) for single spans — Tables 6.3.3a and 6.3.3c; and

(ii) for continuous spans — Tables 6.3.3b and 6.3.3d.

(c) All loads along the bearer must be evenly distributed.

(d) The difference in distance between supports for continuous span bearers must not be more than 10% of the span.

(e) Fixing of joists and columns to structural steel bearers must comply with 6.3.7.

(f) Bearers must be supported by structural steel columns that comply with 6.3.6 and are fixed in accordance with 6.3.7.

Table 6.3.3a: Maximum bearer span (m) — single span — bearer supporting timber floor and 3 m high non-loadbearing internal wall

Steel section	Effective load width (m)				
	1.8	2.4	3.0	3.6	4.2
125 TFB	4.2	4.0	3.9	3.8	3.6
180 UB 16.1	5.6	5.4	5.3	5.1	4.7
200 UB 18.2	6.4	6.2	6.0	5.8	5.4

Steel section	Effective load width (m)				
	1.8	2.4	3.0	3.6	4.2
250 UB 25.7	8.3	8.0	7.8	7.6	7.1
250 x 150 x 9 RHS	9.3	9.0	8.8	8.6	8.4
250 x 150 x 5 RHS	8.0	7.8	7.6	7.1	6.6
310 UB 32.0	10.0	9.7	9.4	9.2	8.6
125 x 75 x 2 RHS	2.9	2.6	2.3	2.2	2.0
125 x 75 x 3 RHS	3.5	3.3	3.2	2.9	2.7
150 x 50 x 2 RHS	3.3	2.9	2.6	2.4	2.3
150 x 50 x 3 RHS	3.7	3.6	3.4	3.1	2.9
100 TFB	2.9	2,8	2.7	2.5	2.4
150 PFC	5.2	5.0	4.9	4.7	4.6
180 PFC	6.1	5.9	5.8	5.6	5.4
200 PFC	6.8	6.6	6.4	6.2	5.9
250 PFC	8.9	8.6	8.4	8.2	8.0
300 PFC	10.4	10.1	9.8	9.5	9.3

Table Notes

(1) Load accounted for includes 0.53 kPa permanent floor, 0.92 kN/m permanent wall, permanent member self-weight, 1.5 kPa or 1.1 kN imposed.

(2) Load combinations included are 1.35G and 1.25G+1.5Q for ULS and G + 0.7Q for SLS with a maximum deflection of span/300.

(3) Bearers are assumed to have intermediate lateral restraints at joist locations and are considered fully laterally restrained.

Table 6.3.3b: Maximum bearer span (m) — continuous span — bearer supporting timber floor and 3 m high non-loadbearing internal wall

Steel section	Effective load width (m)				
	1.8	2.4	3.0	3.6	4.2
125 TFB	5.2	4.6	4.2	3.9	3.6
180 UB 16.1	6.8	6.0	5.5	5.1	4.7
200 UB 18.2	7.7	6.9	6.2	5.8	5.4
250 UB 25.7	10.2	9.1	8.3	7.6	7.1
250 x 150 x 9 RHS	12.4	11.5	10.5	9.8	9.1
250 x 150 x 5 RHS	9.5	8.4	7.7	7.1	6.6
310 UB 32.0	12.3	11.0	10.0	9.2	8.6
125 x 75 x 2 RHS	2.9	2.6	2.3	2.2	2.0
125 x 75 x 3 RHS	4.0	3.5	3.2	2.9	2.7
150 x 50 x 2 RHS	3.3	2.9	2.6	2.4	2.3
150 x 50 x 3 RHS	4.2	3.7	3.4	3.1	2.9
100 TFB	3.4	3.0	2.7	2.5	2.4
150 PFC	6.5	5.8	5.3	4.9	4.6
180 PFC	7.8	6.9	6.3	5.8	5.4
200 PFC	8.5	7.6	6.9	6.4	5.9
250 PFC	11.6	10.4	9.5	8.7	8.2
300 PFC	13.4	12.0	10.9	10.1	9.4

Table Notes

(1) Load accounted for includes 0.53 kPa permanent floor, 0.92 kN/m permanent wall, permanent member self-weight, 1.5 kPa or 1.1 kN imposed.

(2) Load combinations included are 1.35G and 1.25G+1.5Q for ULS and G + 0.7Q for SLS with a maximum deflection of span/300.

(3) Bearers are assumed to have intermediate lateral restraints at joist locations and are considered fully laterally restrained.

Table 6.3.3c: Maximum bearer span (m) — single span — bearer supporting tiled floor and 3 m high non-loadbearing internal wall

Steel section	Effective load width (m)				
	1.8	2.4	3.0	3.6	4.2
125 TFB	3.9	3.7	3.5	3.4	3.3
180 UB 16.1	5.2	5.0	4.8	4.6	4.4
200 UB 18.2	5.9	5.6	5.4	5.2	5.0
250 UB 25.7	7.7	7.3	7.1	6.8	6.6
250 x 150 x 9 RHS	8.7	8.3	8.0	7.7	7.5
250 x 150 x 5 RHS	7.5	7.1	6.9	6.6	6.1
310 UB 32.0	9.3	8.9	8.5	8.2	8.0
125 x 75 x 2 RHS	2.7	2.4	2.2	2.0	1.9
125 x 75 x 3 RHS	3.2	3.0	2.9	2.7	2.5
150 x 50 x 2 RHS	3.0	2.7	2.4	2.2	2.1
150 x 50 x 3 RHS	3.4	3.3	3.1	2.9	2.7
100 TFB	2.7	2.6	2.5	2.3	2.2
150 PFC	4.8	4.6	4.4	4.2	4.1
180 PFC	5.7	5.4	5.2	5.0	4.9
200 PFC	6.3	6.0	5.8	5.6	5.4
250 PFC	8.3	7.9	7.6	7.3	7.1
300 PFC	9.7	9.2	8.9	8.6	8.3

Table Notes

(1) Load accounted for includes 0.98 kPa permanent floor, 0.92 kN/m permanent wall, permanent member self-weight, 1.5 kPa or 1.1 kN imposed.

(2) Load combinations included are 1.35G and 1.25G+1.5Q for ULS and G + 0.7Q for SLS with a maximum deflection of span/300.

(3) Bearers are assumed to have intermediate lateral restraints at joist locations and are considered fully laterally restrained.

Table 6.3.3d: Maximum bearer span (m) — continuous span — bearer supporting tiled floor and 3 m high non-loadbearing internal wall

Steel section	Effective load width (m)				
	1.8	2.4	3.0	3.6	4.2
125 TFB	4.8	4.3	3.9	3.6	3.3
180 UB 16.1	6.3	5.6	5.1	4.7	4.4
200 UB 18.2	7.2	6.4	5.8	5.3	5.0
250 UB 25.7	9.5	8.5	7.7	7.1	6.6
250 x 150 x 9 RHS	11.6	10.8	9.8	9.1	8.5

Steel section	Effective load width (m)				
	1.8	2.4	3.0	3.6	4.2
250 x 150 x 5 RHS	8.8	7.8	7.1	6.6	6.1
310 UB 32.0	11.5	10.2	9.3	8.5	8.0
125 x 75 x 2 RHS	2.7	2.4	2.2	2.0	1.9
125 x 75 x 3 RHS	3.7	3.3	3.0	2.7	2.5
150 x 50 x 2 RHS	3.1	2.7	2.4	2.2	2.1
150 x 50 x 3 RHS	3.9	3.4	3.1	2.9	2.7
100 TFB	3.2	2.8	2.5	2.3	2.2
150 PFC	6.1	5.4	4.9	4.5	4.2
180 PFC	7.2	6.4	5.8	5.4	5.0
200 PFC	8.0	7.1	6.4	5.9	5.5
250 PFC	10.9	9.7	8.8	8.1	7.6
300 PFC	12.5	11.2	10.1	9.4	8.7

Table Notes

(1) Load accounted for includes 0.98 kPa permanent floor, 0.92 kN/m permanent wall, permanent member self-weight, 1.5 kPa or 1.1 kN imposed.

(2) Load combinations included are 1.35G and 1.25G+1.5Q for ULS and G + 0.7Q for SLS with a maximum deflection of span/300.

(3) Bearers are assumed to have intermediate lateral restraints at joist locations and are considered fully laterally restrained.

6.3.4 Strutting beams

[New for 2022]

Structural steel strutting beams must comply with the following:

(a) Acceptable strutting beam spacing must be determined in accordance with—

(i) for single span rafters — Table H1D6a and Figure H1D6a; and

(ii) for continuous span rafters — Table H1D6b and Figure H1D6b.

(b) Maximum acceptable strutting beam spans must be determined in accordance with—

(i) for metal sheet roofs — Tables 6.3.4a, 6.3.4b, 6.3.4c, 6.3.4d, 6.3.4e or 6.3.4f; and

(ii) for tiled roofs — Tables 6.3.4g, 6.3.4h, 6.3.4i, 6.3.4j, 6.3.4k or 6.3.4l.

(c) Any point load applied must be located within the middle third of the strutting beam.

(d) Strutting beams must be tied down in accordance with H1D6(3) where supporting metal roofs.

(e) Fixing and any cutting of strutting beams must comply with 6.3.7.

(f) Strutting beams must be supported by structural steel columns that comply with 6.3.6 and be fixed in accordance with 6.3.7.

Table 6.3.4a: Maximum combined strutting/hanging beam span — combined strutting/hanging beam supporting metal sheet roof and plasterboard ceiling — roof load area = 4 m^2

Section	Ceiling load width (m)		
	1.8	3.6	6.0
125 TFB	3.5	3.3	3.2
150 UB 14.0	3.6	3.4	3.3
200 UB 18.2	4.5	4.3	4.1

Section	Ceiling load width (m)		
	1.8	3.6	6.0
250 UB 31.4	6.8	6.5	6.2
310 UB 46.2	8.9	8.5	8.1
100 TFB	2.0	2.0	1.9
150 PFC	4.7	4.5	4.3
200 PFC	5.5	5.3	5.0
250 PFC	7.5	7.1	6.8
300 PFC	7.8	7.5	7.1

Table Notes

(1) Load accounted for includes 0.2 kPa permanent ceiling, 0.4 kPa permanent roof, permanent member self-weight, 0.25 kPa imposed roof, positive roof wind pressure of 0.95 kPa and negative roof wind pressure of -1.49 kPa.

(2) Load combinations included are 1.35G, 1.2G + 1.5Q, 1.2G + W_U + 0.4Q, 0.9G + W_U for ULS and G + 0.7Q, G + W_S.

(3) 0.9G + W_S for SLS with a maximum deflection of span/300.

(4) Strutting beams are assumed to be partially restrained at both ends with no rotational restraint and are designed as members without full lateral restraint.

Table 6.3.4b: Maximum combined strutting/hanging beam span — combined strutting/hanging beam supporting metal sheet roof and plasterboard ceiling — roof load area = 8 m²

Section	Ceiling load width (m)		
	1.8	3.6	6.0
125 TFB	2.6	2.6	2.5
150 UB 14.0	2.8	2.7	2.7
200 UB 18.2	3.6	3.5	3.4
250 UB 31.4	5.5	5.4	5.2
310 UB 46.2	7.3	7.1	6.9
100 TFB	1.4	1.4	1.4
150 PFC	3.7	3.6	3.5
200 PFC	4.4	4.3	4.1
250 PFC	6.0	5.8	5.7
300 PFC	6.3	6.2	6.0

Table Notes

(1) Load accounted for includes 0.2 kPa permanent ceiling, 0.4 kPa permanent roof, permanent member self-weight, 0.25 kPa imposed roof, positive roof wind pressure of 0.95 kPa and negative roof wind pressure of -1.49 kPa.

(2) Load combinations included are 1.35G, 1.2G + 1.5Q, 1.2G + W_U + 0.4Q, 0.9G + W_U for ULS and G + 0.7Q, G + W_S.

(3) 0.9G + W_S for SLS with a maximum deflection of span/300.

(4) Strutting beams are assumed to be partially restrained at both ends with no rotational restraint and are designed as members without full lateral restraint.

Table 6.3.4c: Maximum combined strutting/hanging beam span — combined strutting/hanging beam supporting metal sheet roof and plasterboard ceiling — roof load area = 12 m²

Section	Ceiling load width (m)		
	1.8	3.6	6.0
125 TFB	2.2	2.2	2.2
150 UB 14.0	2.4	2.3	2.3
200 UB 18.2	3.1	3.0	3.0
250 UB 31.4	4.8	4.7	4.6
310 UB 46.2	6.4	6.3	6.1
100 TFC	1.1	1.1	1.1
150 PFC	3.1	3.1	3.0
200 PFC	3.7	3.7	3.6
250 PFC	5.2	5.1	5.0
300 PFC	5.5	5.4	5.3

Table Notes

(1) Load accounted for includes 0.2 kPa permanent ceiling, 0.4 kPa permanent roof, permanent member self-weight, 0.25 kPa imposed roof, positive roof wind pressure of 0.95 kPa and negative roof wind pressure of -1.49 kPa.

(2) Load combinations included are 1.35G, 1.2G + 1.5Q, 1.2G + W_U + 0.4Q, 0.9G + W_U for ULS and G + 0.7Q, G + W_S.

(3) 0.9G + W_S for SLS with a maximum deflection of span/300.

(4) Strutting beams are assumed to be partially restrained at both ends with no rotational restraint and are designed as members without full lateral restraint.

Table 6.3.4d: Maximum counter-strutting beam span — counter-strutting beam supporting metal sheet roof and plasterboard ceiling — roof load area = 4 m²

Section	Ceiling load area (m²)		
	0	6	12
125 TFB	3.9	3.5	3.2
150 UB 14.0	4.0	3.7	3.4
200 UB 18.2	5.4	4.9	4.6
250 UB 31.4	8.9	8.2	7.7
310 UB 46.2	12.0	11.3	10.7
100 TFB	2.0	1.8	1.6
150 PFC	5.9	5.3	4.9
200 PFC	7.1	6.5	6.0
250 PFC	10.1	9.3	8.7
300 PFC	10.5	9.8	9.2

Table Notes

(1) Load accounted for includes 0.2 kPa permanent ceiling, 0.4 kPa permanent roof, permanent member self-weight, 0.25 kPa imposed roof, positive roof wind pressure of 0.95 kPa and negative roof wind pressure of -1.49 kPa.

(2) Load combinations included are 1.35G and 1.25G + 1.5Q, 1.25G + W_U + 0.4Q, 0.9G + W_U for ULS and G + 0.7Q, G+W_S.

(3) 0.9G + W_S for SLS with a maximum deflection of span/300.

(4) Strutting beams are assumed to be partially restrained at both ends with no rotational restraint and are designed as members without full lateral restraint.

(5) A ceiling load area of "0" must be used for strutting beams not supporting ceiling loads.

Table 6.3.4e: Maximum counter-strutting beam span — counter-strutting beam supporting metal sheet roof and plasterboard ceiling — roof load area = 8 m²

Section	Ceiling load area (m²)		
	0	6	12
125 TFB	2.7	2.6	2.4
150 UB 14.0	2.9	2.8	2.6
200 UB 18.2	4.0	3.8	3.6
250 UB 31.4	6.8	6.5	6.2
310 UB 46.2	9.6	9.2	8.8
100 TFB	1.4	1.3	1.2
150 PFC	4.2	4.0	3.8
200 PFC	5.2	4.9	4.7
250 PFC	7.7	7.3	7.0
300 PFC	8.2	7.8	7.5

Table Notes

(1) Load accounted for includes 0.2 kPa permanent ceiling, 0.4 kPa permanent roof, permanent member self-weight, 0.25 kPa imposed roof, positive roof wind pressure of 0.95 kPa and negative roof wind pressure of -1.49 kPa.

(2) Load combinations included are 1.35G and 1.25G + 1.5Q, 1.25G + W_U + 0.4Q, 0.9G + W_U for ULS and G + 0.7Q, G+W_S.

(3) 0.9G + W_S for SLS with a maximum deflection of span/300.

(4) Strutting beams are assumed to be partially restrained at both ends with no rotational restraint and are designed as members without full lateral restraint.

(5) A ceiling load area of "0" must be used for strutting beams not supporting ceiling loads.

Table 6.3.4f: Maximum counter-strutting beam span — counter-strutting beam supporting metal sheet roof and plasterboard ceiling — roof load area = 12 m²

Section	Ceiling load area (m²)		
	0	6	12
125 TFB	2.2	2.1	2.0
150 UB 14.0	2.4	2.3	2.2
200 UB 18.2	3.3	3.2	3.0
250 UB 31.4	5.7	5.5	5.3
310 UB 46.2	8.2	7.9	7.7
100 TFB	1.1	1.0	1.0
150 PFC	3.4	3.2	3.1
200 PFC	4.2	4.1	3.9
250 PFC	6.4	6.2	6.0
300 PFC	6.9	6.6	6.4

Table Notes

(1) Load accounted for includes 0.2 kPa permanent ceiling, 0.4 kPa permanent roof, permanent member self-weight, 0.25 kPa imposed roof, positive roof wind pressure of 0.95 kPa and negative roof wind pressure of -1.49 kPa.

(2) Load combinations included are 1.35G and 1.25G + 1.5Q, 1.25G + W_U + 0.4Q, 0.9G + W_U for ULS and G + 0.7Q, G+W_S.

(3) 0.9G + W_S for SLS with a maximum deflection of span/300.

(4) Strutting beams are assumed to be partially restrained at both ends with no rotational restraint and are designed as members without full lateral restraint.

(5) A ceiling load area of "0" must be used for strutting beams not supporting ceiling loads.

Table 6.3.4g: Maximum combined strutting/hanging beam span — combined strutting/hanging beam supporting tiled roof and plasterboard ceiling — roof load area = 4 m²

Section	Ceiling load width (m)		
	1.8	3.6	6.0
125 TFB	2.7	2.6	2.6
150 UB 14.0	2.8	2.8	2.7
200 UB 18.2	3.6	3.5	3.4
250 UB 31.4	5.5	5.4	5.2
310 UB 46.2	7.2	7.1	6.9
100 TFB	1.6	1.5	1.5
150 PFC	3.7	3.7	3.6
200 PFC	4.4	4.3	4.2
250 PFC	6.0	5.8	5.7
300 PFC	6.3	6.1	6.0

Table Notes

(1) Load accounted for includes 0.2 kPa permanent ceiling, 0.84 kPa permanent roof, permanent member self-weight, 0.25 kPa imposed roof, positive roof wind pressure of 0.95 kPa and negative roof wind pressure of -1.49 kPa.

(2) Load combinations included are 1.35G, 1.2G + 1.5Q, 1.2G + W_U + 0.4Q, 0.9G + W_U for ULS and G + 0.7Q, G + W_S.

(3) 0.9G + W_S for SLS with a maximum deflection of span/300.

(4) Strutting beams are assumed to be partially restrained at both ends with no rotational restraint and are designed as members without full lateral restraint.

Table 6.3.4h: Maximum combined strutting/hanging beam span — combined strutting/hanging beam supporting tiled roof and plasterboard ceiling — roof load area = 8 m²

Section	Ceiling load width (m)		
	1.8	3.6	6.0
125 TFB	2.0	2.0	2.0
150 UB 14.0	2.2	2.1	2.1
200 UB 18.2	2.8	2.8	2.7
250 UB 31.4	4.4	4.3	4.3
310 UB 46.2	5.8	5.7	5.6
100 TFB	1.1	1.1	1.1
150 PFC	2.8	2.8	2.8
200 PFC	3.4	3.3	3.3
250 PFC	4.7	4.6	4.6
300 PFC	5.0	4.9	4.8

Table Notes

(1) Load accounted for includes 0.2 kPa permanent ceiling, 0.84 kPa permanent roof, permanent member self-weight, 0.25 kPa imposed roof, positive roof wind pressure of 0.95 kPa and negative roof wind pressure of -1.49 kPa.

(2) Load combinations included are 1.35G, 1.2G + 1.5Q, 1.2G + W_U + 0.4Q, 0.9G + W_U for ULS and G + 0.7Q, G + W_S.

(3) 0.9G + W_S for SLS with a maximum deflection of span/300.

(4) Strutting beams are assumed to be partially restrained at both ends with no rotational restraint and are designed as members without full lateral restraint.

Table 6.3.4i: Maximum combined strutting/hanging beam span — combined strutting/hanging beam supporting tiled roof and plasterboard ceiling — roof load area = 12 m²

Section	Ceiling load width (m)		
	1.8	3.6	6.0
125 TFB	1.7	1.7	1.7
150 UB 14.0	1.8	1.8	1.8
200 UB 18.2	2.4	2.4	2.4
250 UB 31.4	3.8	3.8	3.7
310 UB 46.2	5.0	5.0	4.9
100 TFB	0.9	0.9	0.9
150 PFC	2.4	2.4	2.3
200 PFC	2.9	2.8	2.8
250 PFC	4.0	4.0	3.9
300 PFC	4.3	4.2	4.2

Table Notes

(1) Load accounted for includes 0.2 kPa permanent ceiling, 0.84 kPa permanent roof, permanent member self-weight, 0.25 kPa imposed roof, positive roof wind pressure of 0.95 kPa and negative roof wind pressure of -1.49 kPa.

(2) Load combinations included are 1.35G, 1.2G + 1.5Q, 1.2G + W_U + 0.4Q, 0.9G + W_U for ULS and G + 0.7Q, G + W_S.

(3) 0.9G + W_S for SLS with a maximum deflection of span/300.

(4) Strutting beams are assumed to be partially restrained at both ends with no rotational restraint and are designed as members without full lateral restraint.

Table 6.3.4j: Maximum counter-strutting beam span — counter-strutting beam supporting tiled roof and plasterboard ceiling — roof load area = 4 m²

Section	Ceiling load area (m²)		
	0	6	12
125 TFB	3.4	3.1	2.9
150 UB 14.0	3.5	3.3	3.0
200 UB 18.2	4.7	4.4	4.1
250 UB 31.4	7.9	7.4	7.0
310 UB 46.2	10.9	10.4	9.9
100 TFB	1.7	1.6	1.4
150 PFC	5.1	4.6	3.6
200 PFC	6.2	5.7	5.4
250 PFC	9.0	8.4	8.0
300 PFC	9.5	8.9	8.5

Table Notes

(1) Load accounted for includes 0.2 kPa permanent ceiling, 0.4 kPa permanent roof, permanent member self-weight, 0.25 kPa imposed roof, positive roof wind pressure of 0.95 kPa and negative roof wind pressure of -1.49 kPa.

(2) Load combinations included are 1.35G, 1.2G + 1.5Q, 1.2G + W_U + 0.4Q, 0.9G + W_U for ULS and G + 0.7Q, G + W_S.

(3) 0.9G + W_S for SLS with a maximum deflection of span/300.

(4) Strutting beams are assumed to be partially restrained at both ends with no rotational restraint and are designed as members without full lateral restraint.

(5) A ceiling load area of "0" must be used for strutting beams not supporting ceiling loads.

Table 6.3.4k: Maximum counter-strutting beam span — counter-strutting beam supporting tiled roof and plasterboard ceiling — roof load area = 8 m²

Section	Ceiling load area (m²)		
	0	6	12
125 TFB	2.3	2.2	2.1
150 UB 14.0	2.5	2.4	2.3
200 UB 18.2	3.4	3.3	3.2
250 UB 31.4	5.9	5.7	5.5
310 UB 46.2	8.5	8.2	7.9
100 TFB	1.2	1.1	1.0
150 PFC	3.6	3.4	3.3
200 PFC	4.4	4.2	4.1
250 PFC	6.7	6.4	6.2
300 PFC	7.2	6.9	6.7

Table Notes

(1) Load accounted for includes 0.2 kPa permanent ceiling, 0.4 kPa permanent roof, permanent member self-weight, 0.25 kPa imposed roof, positive roof wind pressure of 0.95 kPa and negative roof wind pressure of -1.49 kPa.

(2) Load combinations included are 1.35G, 1.2G + 1.5Q, 1.2G + W_U + 0.4Q, 0.9G + W_U for ULS and G + 0.7Q, G + W_S.

(3) 0.9G + W_S for SLS with a maximum deflection of span/300.

(4) Strutting beams are assumed to be partially restrained at both ends with no rotational restraint and are designed as members without full lateral restraint.

(5) A ceiling load area of "0" must be used for strutting beams not supporting ceiling loads.

Table 6.3.4l: Maximum counter-strutting beam span — counter-strutting beam supporting tiled roof and plasterboard ceiling — roof load area = 12 m²

Section	Ceiling load area (m²)		
	0	6	12
125 TFB	1.8	1.8	1.7
150 UB 14.0	2.0	1.9	1.9
200 UB 18.2	2.8	2.7	2.7
250 UB 31.4	5.0	4.8	4.7
310 UB 46.2	7.1	7.0	6.8
100 TFB	0.9	0.9	0.8
150 PFC	2.8	2.7	2.7
200 PFC	3.6	3.5	3.4
250 PFC	5.5	5.4	5.2
300 PFC	5.9	5.8	5.6

Table Notes

(1) Load accounted for includes 0.2 kPa permanent ceiling, 0.4 kPa permanent roof, permanent member self-weight, 0.25 kPa imposed roof, positive roof wind pressure of 0.95 kPa and negative roof wind pressure of -1.49 kPa.

(2) Load combinations included are 1.35G, 1.2G + 1.5Q, 1.2G + W_U + 0.4Q, 0.9G + W_U for ULS and G + 0.7Q, G + W_S.

(3) 0.9G + W_S for SLS with a maximum deflection of span/300.

(4) Strutting beams are assumed to be partially restrained at both ends with no rotational restraint and are designed as members without full lateral restraint.

(5) A ceiling load area of "0" must be used for strutting beams not supporting ceiling loads.

6.3.5 Lintels

[New for 2022]

Structural steel lintels must comply with the following:

(a) Spans for lintels supporting roofs, frames and timber floors must be determined in accordance with—

(i) for metal sheet roofs, Table 6.3.5a, 6.3.5b or 6.3.5c; and

(ii) for tiled roofs, Table 6.3.5d, 6.3.5e or 6.3.5f.

(b) Effective load widths for structural steel lintels must be determined in accordance with Figure 6.3.5 (a) or (b).

(c) All loads along the structural steel lintel must be evenly distributed.

(d) The top flange of the structural steel lintel must be laterally restrained at the loading points.

(e) Fixing of structural steel lintels must comply with 6.3.7.

(f) Structural steel lintels used in masonry must also comply with H1D5.

(g) Lintel beams must be supported by structural steel columns that comply with 6.3.6.

Table 6.3.5a: Maximum lintel span — lintel supporting metal sheet roof, timber floor and 3 m high exterior wall — roof load width = 1.5 m

Section	Floor load width (m)		
	0	1.8	3.6
150 UB 14.0	4.4	3.0	2.5
200 UB 25.4	6.8	4.7	4.0
250 UB 31.4	7.7	5.3	4.6
100 TFB	2.8	1.8	1.5
150 PFC	5.7	3.8	3.2
200 PFC	6.5	4.3	3.7
250 PFC	8.4	5.7	4.9
75 x 75 x 5 EA	2.0	1.0	–
90 x 90 x 6 EA	3.0	1.5	1.0
100 x 100 x 6 EA	3.0	1.8	1.0
125 x 75 x 6 UA	3.0	1.8	1.3
150 x 100 x 10 UA	4.0	3.0	2.5

Table Notes

(1) Load accounted for includes 0.53 kPa permanent floor, 1.16 kN/m permanent wall, 0.4 kPa permanent roof, permanent member self-weight, 1.5 kPa or 1.1 kN imposed floor, positive roof wind pressure of 0.95 kPa and negative roof wind pressure of -1.49 kPa.

(2) Load combinations included are 1.35G and 1.2G + 1.5Q, 1.2G + W_U + 0.4Q, 0.9G + W_U for ULS and G + 0.7Q, G + W_S.

(3) 0.9G + W_S for SLS with a maximum deflection of span/300.

(4) Lintels are assumed to be partially restrained at both ends with no rotational restraint and are designed as members without full lateral restraint.

(5) A floor load of "0" must be used for lintels not supporting floor loads.

Table 6.3.5b: Maximum lintel span — lintel supporting metal sheet roof, timber floor and 3 m high exterior wall — roof load width = 4.5 m

Section	Floor load width (m)		
	0	1.8	3.6
150 UB 14.0	3.1	2.7	2.4
200 UB 25.4	4.9	4.3	3.8
250 UB 31.4	5.6	4.9	4.3
100 TFB	1.9	1.7	1.5
150 PFC	4.0	3.4	3.0
200 PFC	4.5	3.9	3.4
250 PFC	6.0	5.2	4.6
75 x 75 x 5 EA	1.0	–	–
90 x 90 x 6 EA	1.8	1.3	–
100 x 100 x 6 EA	1.8	1.3	–
125 x 75 x 6 UA	1.8	1.3	1.0
150 x 100 x 10 UA	3.0	2.5	2.0

Table Notes

(1) Load accounted for includes 0.53 kPa permanent floor, 1.16 kN/m permanent wall, 0.4 kPa permanent roof, permanent member self-weight, 1.5 kPa or 1.1 kN imposed floor, positive roof wind pressure of 0.95 kPa and negative roof wind pressure of -1.49 kPa.

(2) Load combinations included are 1.35G and 1.2G + 1.5Q, 1.2G + W_U + 0.4Q, 0.9G + W_U for ULS and G + 0.7Q, G + W_S.

(3) 0.9G + W_S for SLS with a maximum deflection of span/300.

(4) Lintels are assumed to be partially restrained at both ends with no rotational restraint and are designed as members without full lateral restraint.

(5) A floor load of "0" must be used for lintels not supporting floor loads.

Table 6.3.5c: Maximum lintel span — lintel supporting metal sheet roof, timber floor and 3 m high exterior wall — roof load width = 7.5 m

Section	Floor load width (m)		
	0	1.8	3.6
150 UB 14.0	2.6	2.4	2.2
200 UB 25.4	4.1	3.8	3.6
250 UB 31.4	4.7	4.4	4.1
100 TFB	1.6	1.5	1.4
150 PFC	3.3	3.0	2.8
200 PFC	3.8	3.5	3.3
250 PFC	5.1	4.6	4.3
75 x 75 x 5 EA	–	–	–
90 x 90 x 6 EA	1.0	–	–
100 x 100 x 6 EA	1.0	–	–

Section	Floor load width (m)		
	0	1.8	3.6
125 x 75 x 6 UA	1.3	1.0	1.0
150 x 100 x 10 UA	2.5	2.0	2.0

Table Notes

(1) Load accounted for includes 0.53 kPa permanent floor, 1.16 kN/m permanent wall, 0.4 kPa permanent roof, permanent member self-weight, 1.5 kPa or 1.1 kN imposed floor, positive roof wind pressure of 0.95 kPa and negative roof wind pressure of -1.49 kPa.

(2) Load combinations included are 1.35G and 1.2G + 1.5Q, 1.2G + W_U + 0.4Q, 0.9G + W_U for ULS and G + 0.7Q, G + W_S.

(3) 0.9G + W_S for SLS with a maximum deflection of span/300.

(4) Lintels are assumed to be partially restrained at both ends with no rotational restraint and are designed as members without full lateral restraint.

(5) A floor load of “0” must be used for lintels not supporting floor loads.

Table 6.3.5d: Maximum lintel span — lintel supporting tiled roof, tiled floor and 3 m high exterior wall — roof load width = 1.5 m

Section	Floor load width (m)		
	0	1.8	3.6
150 UB 14.0	4.0	2.8	2.3
200 UB 25.4	6.2	4.4	3.7
250 UB 31.4	7.1	5.0	4.3
100 TFB	2.5	1.7	1.4
150 PFC	5.2	3.5	2.9
200 PFC	5.9	4.0	3.4
250 PFC	7.7	5.4	4.5
75 x 75 x 5 EA	2.0	–	–
90 x 90 x 6 EA	2.5	1.3	–
100 x 100 x 6 EA	3.0	1.3	–
125 x 75 x 6 UA	2.5	1.5	1.0
150 x 100 x 10 UA	4.0	2.5	2.0

Table Notes

(1) Load accounted for includes 0.98 kPa permanent floor, 1.16 kN/m permanent wall, 0.85 kPa permanent roof, permanent member self-weight, 1.5 kPa or 1.1 kN imposed floor, positive roof wind pressure of 0.95 kPa and negative roof wind pressure of -1.49 kPa.

(2) Load combinations included are 1.35G, 1.2G + 1.5Q, 1.2G + W_U + 0.4Q, 0.9G + W_U for ULS G + 0.7Q, G + W_S.

(3) 0.9G + WS_S for SLS with a maximum deflection of span/300.

(4) Lintels are assumed to be partially restrained at both ends with no rotational restraint and are designed as members without full lateral restraint.

(5) A floor load of “0” must be used for lintels not supporting floor loads.

Table 6.3.5e: Maximum lintel span — lintel supporting tiled roof, tiled floor and 3 m high exterior wall — roof load width = 4.5 m

Section	Floor load width (m)		
	0	1.8	3.6
150 UB 14.0	2.8	2.5	2.2
200 UB 25.4	4.4	3.9	3.5
250 UB 31.4	5.1	4.5	4.0
100 TFB	1.7	1.5	1.3
150 PFC	3.6	3.1	2.7
200 PFC	4.1	3.6	3.1
250 PFC	5.4	4.7	4.2
75 x 75 x 5 EA	–	–	–
90 x 90 x 6 EA	1.3	1.0	–
100 x 100 x 6 EA	1.5	1.0	–
125 x 75 x 6 UA	1.5	1.0	–
150 x 100 x 10 UA	2.5	2.0	1.8

Table Notes

(1) Load accounted for includes 0.98 kPa permanent floor, 1.16 kN/m permanent wall, 0.85 kPa permanent roof, permanent member self-weight, 1.5 kPa or 1.1 kN imposed floor, positive roof wind pressure of 0.95 kPa and negative roof wind pressure of -1.49 kPa.

(2) Load combinations included are 1.35G, 1.2G + 1.5Q, 1.2G + W_U + 0.4Q, 0.9G + W_U for ULS G + 0.7Q, G + W_S.

(3) 0.9G + W_S for SLS with a maximum deflection of span/300.

(4) Lintels are assumed to be partially restrained at both ends with no rotational restraint and are designed as members without full lateral restraint.

(5) A floor load of “0” must be used for lintels not supporting floor loads.

Table 6.3.5f: Maximum lintel span — lintel supporting tiled roof, tiled floor and 3 m high exterior wall — roof load width = 7.5 m

Section	Floor load width (m)		
	0	1.8	3.6
150 UB 14.0	2.4	2.2	2.0
200 UB 25.4	3.8	3.4	3.2
250 UB 31.4	4.3	4.0	3.7
100 TFB	1.5	1.3	1.2
150 PFC	3.0	2.7	2.5
200 PFC	3.4	3.1	2.9
250 PFC	4.6	4.2	3.9
75 x 75 x 5 EA	–	–	–
90 x 90 x 6 EA	–	–	–
100 x 100 x 6 EA	–	–	–
125 x 75 x 6 UA	1.0	–	–
150 x 100 x 10 UA	2.0	1.8	1.5

Table Notes

(1) Load accounted for includes 0.98 kPa permanent floor, 1.16 kN/m permanent wall, 0.85 kPa permanent roof, permanent member self-weight, 1.5 kPa or 1.1 kN imposed floor, positive roof wind pressure of 0.95 kPa and

negative roof wind pressure of -1.49 kPa.

(2) Load combinations included are 1.35G, 1.2G + 1.5Q, 1.2G + W_U + 0.4Q, 0.9G + W_U for ULS G + 0.7Q, G + W_S.

(3) 0.9G + W_S for SLS with a maximum deflection of span/300.

(4) Lintels are assumed to be partially restrained at both ends with no rotational restraint and are designed as members without full lateral restraint.

(5) A floor load of "0" must be used for lintels not supporting floor loads.

Figure 6.3.5: Lintels supporting roof, frames and timber floors

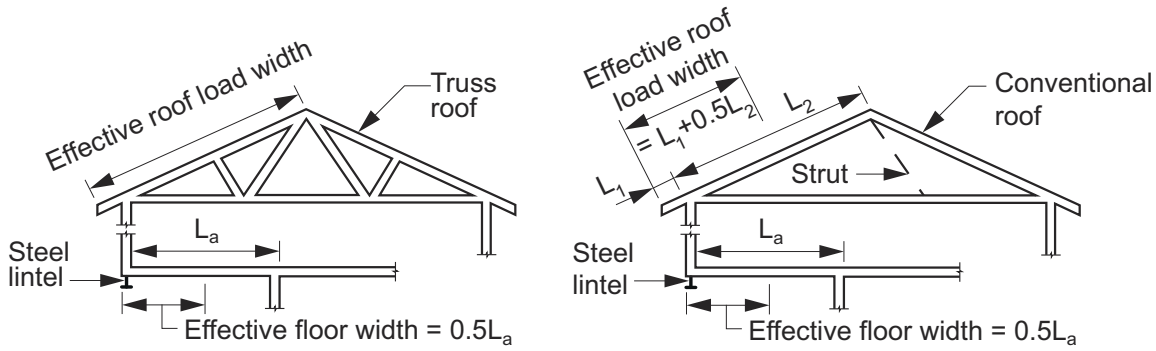

(a) Floor and truss roof **(b) Floor and conventional roof**

6.3.6 Columns

[2019: 3.4.4.3]

Structural steel columns must comply with the following:

(a) Columns must support the maximum area provided for in—

(i) Tables 6.3.6a, 6.3.6b and 6.3.6c for columns supporting tiled floor and tiled roof load; and

(ii) Tables 6.3.6d, 6.3.6e and 6.3.6f for columns supporting timber floor and metal roof load.

(b) The floor area to be supported is to be determined in accordance with Table 6.3.6g and Figure 6.3.6a.

(c) The flooring system supported by structural steel columns must be fully braced to the footing level either by—

(i) subject to (d), adequately fixing the full height of the column to bracing walls of similar height in the two orthogonal directions of the building; or

(ii) a bracing system designed in accordance with AS 1684.2, AS 1684.3, AS/NZS 4600, NASH standard or AS 3700 as appropriate to the materials being used.

(d) For the purposes of (c)(i), the bracing walls must be capable of resisting racking forces in each direction not less than a proportion of the building's racking force equal to the proportion of floor area that the column is supporting compared to the total floor area of the building.

(e) Acceptable load eccentricity must not exceed 50% of the cross-sectional width plus 100 mm (see Figure 6.3.6b).

(f) Have a minimum nominal yield strength of 250 MPa.

Table 6.3.6a: Required column section — columns supporting tiled floor and tiled roof load — roof load area = 0 m²

Column section	Effective height (mm)	Floor load area (m²)		
		4	10	16
CHS 250	2400	60.3 x 4.5 CHS	88.9 x 5 CHS	114.3 x 4.5 CHS
CHS 250	2700	60.3 x 4.5 CHS	88.9 x 5 CHS	114.3 x 4.5 CHS
CHS 250	3000	60.3 x 4.5 CHS	88.9 x 5 CHS	114.3 x 4.5 CHS
CHS 250	3300	60.3 x 5.4 CHS	88.9 x 5 CHS	114.3 x 5.4 CHS

Column section	Effective height (mm)	Floor load area (m^2)		
		4	10	16
CHS 250	3600	60.3 x 5.4 CHS	88.9 x 5 CHS	114.3 x 5.4 CHS
CHS 350	2400	60.3 x 2.9 CHS	88.9 x 3.2 CHS	114.3 x 3.2 CHS
CHS 350	2700	60.3 x 2.9 CHS	88.9 x 3.2 CHS	114.3 x 3.2 CHS
CHS 350	3000	60.3 x 2.9 CHS	88.9 x 3.2 CHS	114.3 x 3.2 CHS
CHS 350	3300	76.1 x 2.3 CHS	88.9 x 3.2 CHS	114.3 x 3.2 CHS
CHS 350	3600	76.1 x 2.3 CHS	101.6 x 2.6 CHS	114.3 x 3.2 CHS
SHS 350	2400	65 x 65 x 2 SHS	89 x 89 x 3.5 SHS	100 x 100 x 4 SHS
SHS 350	2700	65 x 65 x 2 SHS	89 x 89 x 3.5 SHS	100 x 100 x 4 SHS
SHS 350	3000	65 x 65 x 2 SHS	89 x 89 x 3.5 SHS	100 x 100 x 4 SHS
SHS 350	3300	65 x 65 x 2 SHS	89 x 89 x 3.5 SHS	100 x 100 x 4 SHS
SHS 350	3600	65 x 65 x 2.5 SHS	89 x 89 x 3.5 SHS	100 x 100 x 4 SHS
SHS 450	2400	50 x 50 x 2 SHS	89 x 89 x 3.5 SHS	100 x 100 x 3 SHS
SHS 450	2700	65 x 65 x 2 SHS	89 x 89 x 3.5 SHS	100 x 100 x 3 SHS
SHS 450	3000	65 x 65 x 2 SHS	89 x 89 x 3.5 SHS	100 x 100 x 3 SHS
SHS 450	3300	65 x 65 x 2 SHS	89 x 89 x 3.5 SHS	100 x 100 x 3 SHS
SHS 450	3600	65 x 65 x 2 SHS	89 x 89 x 3.5 SHS	100 x 100 x 3 SHS

Table Notes

(1) Load accounted for includes 0.98 kPa permanent floor, 1.16 kN/m permanent wall, 0.85 kPa permanent roof, permanent member self-weight, 1.5 kPa or 1.1 kN imposed floor.

(2) Load combinations included are 1.35G and 1.2G + 1.5Q for ULS.

(3) Columns are assumed to be simply-supported at both ends with an effective length factor of 1.

(4) A maximum load eccentricity of 100 mm has been accounted for in the columns.

(5) A roof load area of “0” must be used for columns not supporting roof loads.

(6) The length of wall load allowed for is equal to the square root of the floor area.

Table 6.3.6b: Required column section — columns supporting tiled floor and tiled roof load — roof load area = 9 m^2

Column section	Effective height (mm)	Floor load area (m^2)		
		4	10	16
CHS 250	2400	76.1 x 4.5 CHS	101.6 x 5 CHS	114.3 x 5.4 CHS
CHS 250	2700	76.1 x 4.5 CHS	101.6 x 5 CHS	114.3 x 5.4 CHS
CHS 250	3000	76.1 x 5.9 CHS	101.6 x 5 CHS	139.7 x 5 CHS
CHS 250	3300	76.1 x 5.9 CHS	101.6 x 5 CHS	139.7 x 5 CHS
CHS 250	3600	76.1 x 5.9 CHS	101.6 x 5 CHS	139.7 x 5 CHS
CHS 350	2400	76.1 x 3.2 CHS	101.6 x 3.2 CHS	139.7 x 3 CHS
CHS 350	2700	76.1 x 3.2 CHS	101.6 x 3.2 CHS	139.7 x 3 CHS
CHS 350	3000	76.1 x 3.2 CHS	114.3 x 3.2 CHS	139.7 x 3 CHS
CHS 350	3300	88.9 x 2.6 CHS	114.3 x 3.2 CHS	139.7 x 3 CHS
CHS 350	3600	88.9 x 2.6 CHS	114.3 x 3.2 CHS	139.7 x 3 CHS
SHS 350	2400	89 x 89 x 3.5 SHS	100 x 100 x 3 SHS	100 x 100 x 4 SHS
SHS 350	2700	89 x 89 x 3.5 SHS	100 x 100 x 3 SHS	100 x 100 x 4 SHS
SHS 350	3000	89 x 89 x 3.5 SHS	100 x 100 x 3 SHS	100 x 100 x 4 SHS

Column section	Effective height (mm)	Floor load area (m^2)		
		4	10	16
SHS 350	3300	89 x 89 x 3.5 SHS	100 x 100 x 3 SHS	100 x 100 x 4 SHS
SHS 350	3600	89 x 89 x 3.5 SHS	100 x 100 x 3 SHS	100 x 100 x 4 SHS
SHS 450	2400	75 x 75 x 2.5 SHS	89 x 89 x 3.5 SHS	100 x 100 x 3 SHS
SHS 450	2700	75 x 75 x 2.5 SHS	89 x 89 x 3.5 SHS	100 x 100 x 3 SHS
SHS 450	3000	75 x 75 x 2.5 SHS	89 x 89 x 3.5 SHS	100 x 100 x 4 SHS
SHS 450	3300	75 x 75 x 2.5 SHS	89 x 89 x 3.5 SHS	100 x 100 x 4 SHS
SHS 450	3600	75 x 75 x 2.5 SHS	89 x 89 x 3.5 SHS	100 x 100 x 4 SHS

Table Notes

(1) Load accounted for includes 0.98 kPa permanent floor, 1.16 kN/m permanent wall, 0.85 kPa permanent roof, permanent member self-weight, 1.5 kPa or 1.1 kN imposed floor and 0.25 kPa imposed roof.

(2) Load combinations included are 1.35G and 1.2G + 1.5Q for ULS.

(3) Columns are assumed to be simply-supported at both ends with an effective length factor of 1.

(4) A maximum load eccentricity of 100 mm has been accounted for in the columns.

(5) A roof load area of “0” must be used for columns not supporting roof loads.

(6) The length of wall load allowed for is equal to the square root of the floor area.

Table 6.3.6c: Required column section — columns supporting tiled floor and tiled roof load — roof load area = 18 m^2

Column section	Effective height (mm)	Floor load area (m^2)		
		4	10	16
CHS 250	2400	88.9 x 5 CHS	114.3 x 5.4 CHS	139.7 x 5 CHS
CHS 250	2700	88.9 x 5 CHS	114.3 x 5.4 CHS	139.7 x 5 CHS
CHS 250	3000	88.9 x 5 CHS	114.3 x 5.4 CHS	139.7 x 5 CHS
CHS 250	3300	88.9 x 5.9 CHS	114.3 x 5.4 CHS	139.7 x 5 CHS
CHS 250	3600	88.9 x 5.9 CHS	114.3 x 5.4 CHS	139.7 x 5 CHS
CHS 350	2400	101.6 x 2.6 CHS	114.3 x 3.6 CHS	139.7 x 3.5 CHS
CHS 350	2700	101.6 x 2.6 CHS	114.3 x 3.6 CHS	139.7 x 3.5 CHS
CHS 350	3000	101.6 x 3.2 CHS	114.3 x 3.6 CHS	139.7 x 3.5 CHS
CHS 350	3300	101.6 x 3.2 CHS	114.3 x 3.6 CHS	139.7 x 3.5 CHS
CHS 350	3600	101.6 x 3.2 CHS	114.3 x 3.6 CHS	139.7 x 3.5 CHS
SHS 350	2400	89 x 89 x 3.5 SHS	100 x 100 x 4 SHS	100 x 100 x 4 SHS
SHS 350	2700	89 x 89 x 3.5 SHS	100 x 100 x 4 SHS	100 x 100 x 4 SHS
SHS 350	3000	89 x 89 x 3.5 SHS	100 x 100 x 4 SHS	100 x 100 x 5 SHS
SHS 350	3300	100 x 100 x 3 SHS	100 x 100 x 4 SHS	100 x 100 x 5 SHS
SHS 350	3600	100 x 100 x 3 SHS	100 x 100 x 4 SHS	100 x 100 x 5 SHS
SHS 450	2400	89 x 89 x 3.5 SHS	100 x 100 x 3 SHS	100 x 100 x 4 SHS
SHS 450	2700	89 x 89 x 3.5 SHS	100 x 100 x 3 SHS	100 x 100 x 4 SHS
SHS 450	3000	89 x 89 x 3.5 SHS	100 x 100 x 3 SHS	100 x 100 x 4 SHS
SHS 450	3300	89 x 89 x 3.5 SHS	100 x 100 x 3 SHS	100 x 100 x 4 SHS
SHS 450	3600	89 x 89 x 3.5 SHS	100 x 100 x 3 SHS	100 x 100 x 4 SHS

Table Notes

(1) Load accounted for includes 0.98 kPa permanent floor, 1.16 kN/m permanent wall, 0.85 kPa permanent roof,

permanent member self-weight, 1.5 kPa or 1.1 kN imposed floor and 0.25 kPa imposed roof.

(2) Load combinations included are 1.35G and 1.2G + 1.5Q for ULS.

(3) Columns are assumed to be simply-supported at both ends with an effective length factor of 1.

(4) A maximum load eccentricity of 100 mm has been accounted for in the columns.

(5) A roof load area of "0" must be used for columns not supporting roof loads.

(6) The length of wall load allowed for is equal to the square root of the floor area.

Table 6.3.6d: Required column section — columns supporting timber floor and metal roof load — roof load area = 0 m^2

Column section	Effective height (mm)	Floor load area (m^2)		
		4	10	16
CHS 250	2400	60.3 x 3.6 CHS	76.1 x 5.9 CHS	101.6 x 5 CHS
CHS 250	2700	60.3 x 3.6 CHS	76.1 x 5.9 CHS	101.6 x 5 CHS
CHS 250	3000	60.3 x 4.5 CHS	76.1 x 5.9 CHS	101.6 x 5 CHS
CHS 250	3300	60.3 x 4.5 CHS	76.1 x 5.9 CHS	101.6 x 5 CHS
CHS 250	3600	60.3 x 4.5 CHS	88.9 x 5 CHS	101.6 x 5 CHS
CHS 350	2400	60.3 x 2.3 CHS	88.9 x 2.6 CHS	101.6 x 3.2 CHS
CHS 350	2700	60.3 x 2.9 CHS	88.9 x 2.6 CHS	114.3 x 3.2 CHS
CHS 350	3000	60.3 x 2.9 CHS	88.9 x 3.2 CHS	114.3 x 3.2 CHS
CHS 350	3300	60.3 x 2.9 CHS	88.9 x 3.2 CHS	114.3 x 3.2 CHS
CHS 350	3600	60.3 x 2.9 CHS	88.9 x 3.2 CHS	114.3 x 3.2 CHS
SHS 350	2400	65 x 65 x 2 SHS	89 x 89 x 3.5 SHS	100 x 100 x 3 SHS
SHS 350	2700	65 x 65 x 2 SHS	89 x 89 x 3.5 SHS	100 x 100 x 3 SHS
SHS 350	3000	65 x 65 x 2 SHS	89 x 89 x 3.5 SHS	100 x 100 x 3 SHS
SHS 350	3300	65 x 65 x 2 SHS	89 x 89 x 3.5 SHS	100 x 100 x 3 SHS
SHS 350	3600	65 x 65 x 2 SHS	89 x 89 x 3.5 SHS	100 x 100 x 3 SHS
SHS 450	2400	50 x 50 x 2 SHS	75 x 75 x 2.5 SHS	89 x 89 x 3.5 SHS
SHS 450	2700	50 x 50 x 2 SHS	75 x 75 x 2.5 SHS	89 x 89 x 3.5 SHS
SHS 450	3000	50 x 50 x 2 SHS	75 x 75 x 2.5 SHS	89 x 89 x 3.5 SHS
SHS 450	3300	50 x 50 x 2.5 SHS	89 x 89 x 3.5 SHS	89 x 89 x 3.5 SHS
SHS 450	3600	50 x 50 x 2.5 SHS	89 x 89 x 3.5 SHS	89 x 89 x 3.5 SHS

Table Notes

(1) Load accounted for includes 0.53 kPa permanent floor, 1.16 kN/m permanent wall, 0.4 kPa permanent roof, permanent member self-weight, 1.5 kPa or 1.1 kN imposed floor and 0.25 kPa imposed roof.

(2) Load combinations included are 1.35G and 1.2G + 1.5Q for ULS.

(3) Columns are assumed to be simply-supported at both ends with an effective length factor of 1.

(4) A maximum load eccentricity of 100 mm has been accounted for in the columns.

(5) A roof load area of "0" must be used for columns not supporting roof loads.

(6) The length of wall load allowed for is equal to the square root of the floor area.

Table 6.3.6e: Required column section — columns supporting timber floor and metal roof load — roof load area = 9 m²

Column section	Effective height (mm)	Floor load area (m²)		
		4	10	16
CHS 250	2400	60.3 x 5.4 CHS	88.9 x 5 CHS	114.3 x 4.5 CHS
CHS 250	2700	76.1 x 3.6 CHS	88.9 x 5 CHS	114.3 x 4.5 CHS
CHS 250	3000	76.1 x 3.6 CHS	88.9 x 5 CHS	114.3 x 4.5 CHS
CHS 250	3300	76.1 x 3.6 CHS	88.9 x 5 CHS	114.3 x 4.5 CHS
CHS 250	3600	76.1 x 4.5 CHS	88.9 x 5.9 CHS	114.3 x 5.4 CHS
CHS 350	2400	76.1 x 2.3 CHS	88.9 x 3.2 CHS	114.3 x 3.2 CHS
CHS 350	2700	76.1 x 2.3 CHS	101.6 x 2.6 CHS	114.3 x 3.2 CHS
CHS 350	3000	76.1 x 3.2 CHS	101.6 x 2.6 CHS	114.3 x 3.2 CHS
CHS 350	3300	76.1 x 3.2 CHS	101.6 x 3.2 CHS	114.3 x 3.2 CHS
CHS 350	3600	76.1 x 3.2 CHS	101.6 x 3.2 CHS	114.3 x 3.2 CHS
SHS 350	2400	65 x 65 x 2.5 SHS	89 x 89 x 3.5 SHS	100 x 100 x 4 SHS
SHS 350	2700	75 x 75 x 2.5 SHS	89 x 89 x 3.5 SHS	100 x 100 x 4 SHS
SHS 350	3000	75 x 75 x 2.5 SHS	89 x 89 x 3.5 SHS	100 x 100 x 4 SHS
SHS 350	3300	75 x 75 x 2.5 SHS	89 x 89 x 3.5 SHS	100 x 100 x 4 SHS
SHS 350	3600	75 x 75 x 2.5 SHS	100 x 100 x 3 SHS	100 x 100 x 4 SHS
SHS 450	2400	65 x 65 x 2 SHS	89 x 89 x 3.5 SHS	100 x 100 x 3 SHS
SHS 450	2700	65 x 65 x 2 SHS	89 x 89 x 3.5 SHS	100 x 100 x 3 SHS
SHS 450	3000	65 x 65 x 2 SHS	89 x 89 x 3.5 SHS	100 x 100 x 3 SHS
SHS 450	3300	65 x 65 x 2.5 SHS	89 x 89 x 3.5 SHS	100 x 100 x 3 SHS
SHS 450	3600	65 x 65 x 2.5 SHS	89 x 89 x 3.5 SHS	100 x 100 x 3 SHS

Table Notes

(1) Load accounted for includes 0.53 kPa permanent floor, 1.16 kN/m permanent wall, 0.4 kPa permanent roof, permanent member self-weight, 1.5 kPa or 1.1 kN imposed floor and 0.25 kPa imposed roof.

(2) Load combinations included are 1.35G and 1.2G + 1.5Q for ULS.

(3) Columns are assumed to be simply-supported at both ends with an effective length factor of 1.

(4) A maximum load eccentricity of 100 mm has been accounted for in the columns.

(5) A roof load area of “0” must be used for columns not supporting roof loads.

(6) The length of wall load allowed for is equal to the square root of the floor area.

Table 6.3.6f: Required column section — columns supporting timber floor and metal roof load — roof load area = 18 m²

Column section	Effective height (mm)	Floor load area (m²)		
		4	10	16
CHS 250	2400	76.1 x 4.5 CHS	101.6 x 5 CHS	114.3 x 5.4 CHS
CHS 250	2700	76.1 x 5.9 CHS	101.6 x 5 CHS	114.3 x 5.4 CHS
CHS 250	3000	76.1 x 5.9 CHS	101.6 x 5 CHS	114.3 x 5.4 CHS
CHS 250	3300	76.1 x 5.9 CHS	101.6 x 5 CHS	114.3 x 5.4 CHS
CHS 250	3600	76.1 x 5.9 CHS	101.6 x 5 CHS	114.3 x 5.4 CHS
CHS 350	2400	76.1 x 3.2 CHS	101.6 x 3.2 CHS	114.3 x 3.6 CHS
CHS 350	2700	76.1 x 3.2 CHS	101.6 x 3.2 CHS	114.3 x 3.6 CHS

Column section	Effective height (mm)	Floor load area (m^2)		
		4	10	16
CHS 350	3000	88.9 x 2.6 CHS	101.6 x 3.2 CHS	114.3 x 3.6 CHS
CHS 350	3300	88.9 x 2.6 CHS	101.6 x 3.2 CHS	114.3 x 3.6 CHS
CHS 350	3600	88.9 x 2.6 CHS	101.6 x 3.2 CHS	114.3 x 3.6 CHS
SHS 350	2400	89 x 89 x 3.5 SHS	100 x 100 x 3 SHS	100 x 100 x 4 SHS
SHS 350	2700	89 x 89 x 3.5 SHS	100 x 100 x 3 SHS	100 x 100 x 4 SHS
SHS 350	3000	89 x 89 x 3.5 SHS	100 x 100 x 3 SHS	100 x 100 x 4 SHS
SHS 350	3300	89 x 89 x 3.5 SHS	100 x 100 x 3 SHS	100 x 100 x 4 SHS
SHS 350	3600	89 x 89 x 3.5 SHS	100 x 100 x 3 SHS	100 x 100 x 4 SHS
SHS 450	2400	75 x 75 x 2.5 SHS	89 x 89 x 3.5 SHS	100 x 100 x 3 SHS
SHS 450	2700	75 x 75 x 2.5 SHS	89 x 89 x 3.5 SHS	100 x 100 x 3 SHS
SHS 450	3000	75 x 75 x 2.5 SHS	89 x 89 x 3.5 SHS	100 x 100 x 3 SHS
SHS 450	3300	75 x 75 x 2.5 SHS	89 x 89 x 3.5 SHS	100 x 100 x 3 SHS
SHS 450	3600	75 x 75 x 2.5 SHS	89 x 89 x 3.5 SHS	100 x 100 x 3 SHS

Table Notes

(1) Load accounted for includes 0.53 kPa permanent floor, 1.16 kN/m permanent wall, 0.4 kPa permanent roof, permanent member self-weight, 1.5 kPa or 1.1 kN imposed floor and 0.25 kPa imposed roof.

(2) Load combinations included are 1.35G and 1.2G + 1.5Q for ULS.

(3) Columns are assumed to be simply-supported at both ends with an effective length factor of 1.

(4) A maximum load eccentricity of 100 mm has been accounted for in the columns.

(5) A roof load area of “0” must be used for columns not supporting roof loads.

(6) The length of wall load allowed for is equal to the square root of the floor area.

Table 6.3.6g: Area supported by columns

Column descriptor (as shown in Figure 6.3.6a)	Total area supported
C1	0.4L1 x 0.4LA
C2	0.7(L1 + L2) x 0.4LA
C3	0.4L1 x 0.7(LA + LB)
C4	0.7(L1 + L2) x 0.7(LA + LB)
C5	0.4L1 + 0.4LC
C6	0.7(L1 + L2) x 0.4LC

Table Notes

The total area supported equations marginally overestimate the total area to account for a difference between L1 and L2 by up to 30%.

Figure 6.3.6a: Determining floor area supported by columns

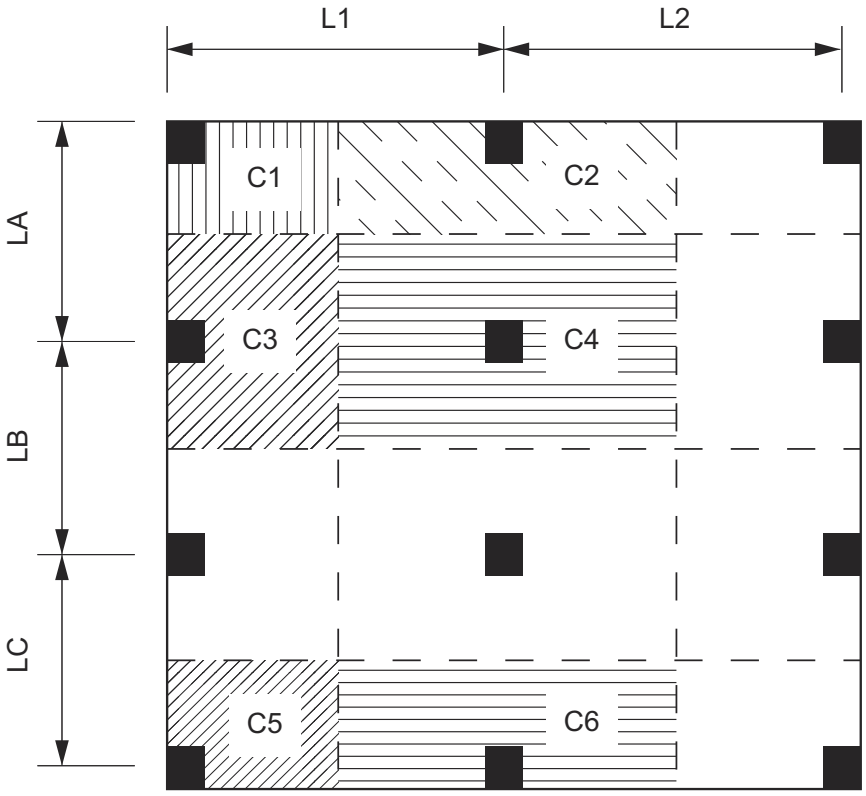

Figure 6.3.6b: Acceptable load eccentricity for columns

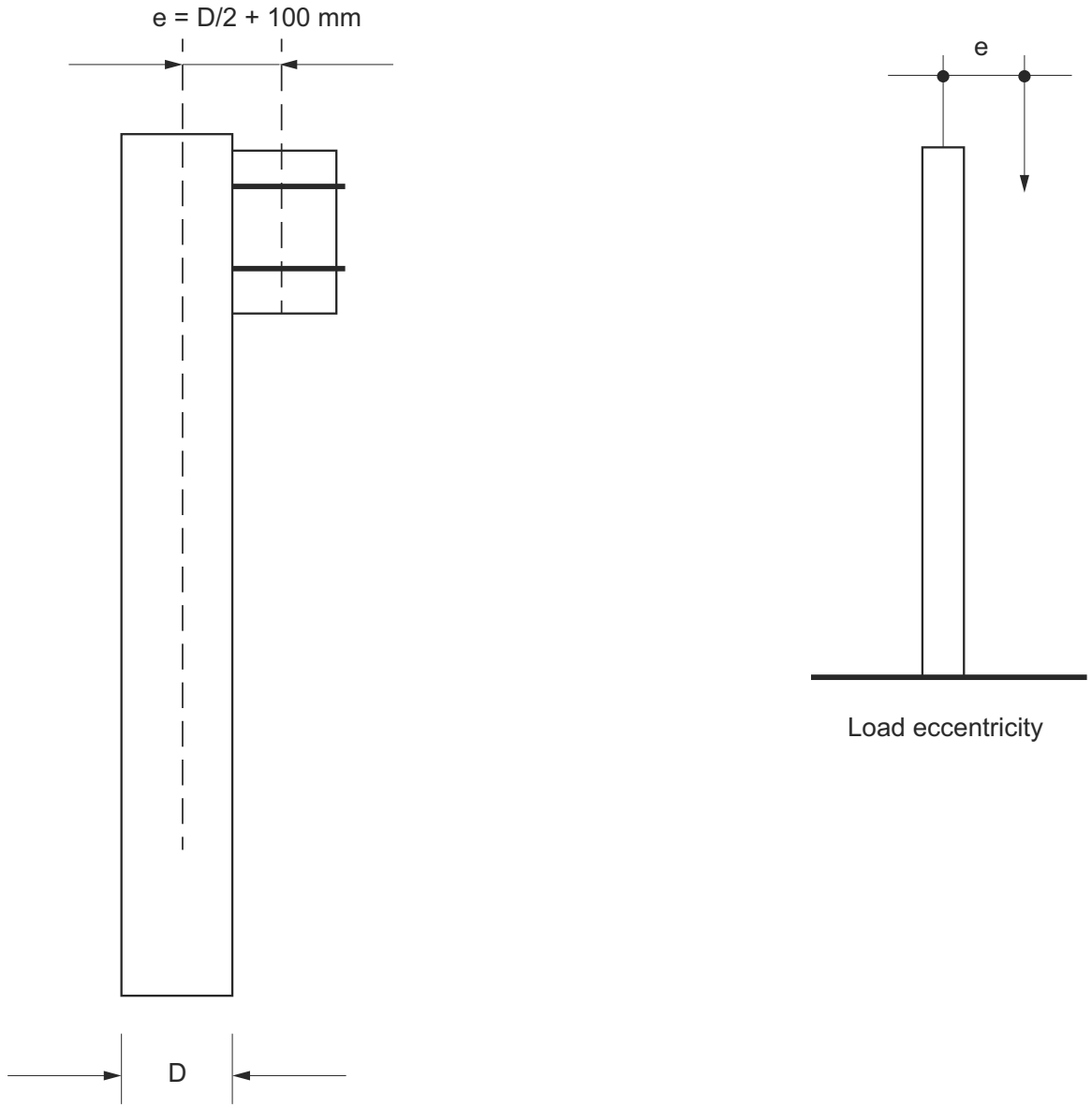

Explanatory Information: Cantilever columns

A cantilever column is not assisted by any lateral bracing element such as a column bracing set, timber or masonry wall.

Explanatory Information: Calculating column size

The following is an example of the steps required to calculate a suitable column to support typical floor loads in a residential building. It is proposed the column will—

- have an actual height of 1800 mm; and
- support a timber floor only; and
- be square in section; and
- be cast in to the footings; and
- be fully braced by column bracing sets.

Step 1 – Determining effective column height

The column height (H) is determined by multiplying the actual height by the relevant height factor (F1) in Tables 6.3.6d, 6.3.6e or 6.3.6f. In this case, the relevant value for F1 is 1.00 as the column is cast in to the footing and is fully braced.

Therefore:

- H = actual height x F1
- H = 1800 mm x F1
- H = 1800 mm (1.8 m)

Step 2 – Determine floor area to be supported

The column position selected is C4 as shown in Figure 6.3.6a and the dimensions of L1 and L2 are 2700 mm (2.7 m), LA is 1900 mm (1.9 m) and LB is 2100 mm (2.1 m).

The area supported by the column is determined by the formulae set out in Table 6.3.6g.

Therefore:

- Total area supported (A) is 0.625(L1 + L2) x 0.625(LA + LB)
- A = 0.625(2.7 m + 2.7 m) x 0.625 x (1.9 m + 2.1 m)
- A = (0.625 x 5.4 m) x (0.625 x 4.0 m)
- A = 3.38 m x 2.5 m
- A = 8.5 m^2

Step 3 – Select column size from Tables 6.3.6d, 6.3.6e or 6.3.6f

The column with an effective height of 1800 mm supporting a floor area of 8.5 m^2 is selected from the 10 m^2 column in Table 6.3.6d ("0" roof load area) giving a SHS 350 75 x 75 x 3 size.

It should be noted there is a choice of CHS 250 88.9 x 4 or CHS 350 101.6 x 2.6 should a different section be desired.

6.3.7 Fixings and bearing for structural steel members

[New for 2022]

(1) All bolts used in connections must be hot dip galvanised 300 g/m^2.

(2) Bearer connections must be fixed in accordance with Figure 6.3.7a.

(3) Joists, bearers and lintels must be restrained from lateral movement or twisting along their length by fixing rafters or joists to the top flange of the member so as to prevent the member from moving laterally.

(4) End supports for bearers and lintels must transfer loads to the footings and have a bearing distance as follows:

  (a) For single spans, the bearing distance must be not less than the width of the member.

  (b) For continuous spans, internal bearing must be not less than two times the width of the member.

(5) Strutting beams must—

  (a) be supported and fixed in accordance with Figure 6.3.7b; and

  (b) where ends are cut to suit roof pitch, be cut in accordance with Figure 6.3.7c.

(6) Lintels must be fixed in accordance with Figures 6.3.7d, 6.3.7e, 6.3.7f, 6.3.7g and 6.3.7h.

Figure 6.3.7a: Bearer supporting a timber floor and non-loadbearing stud wall

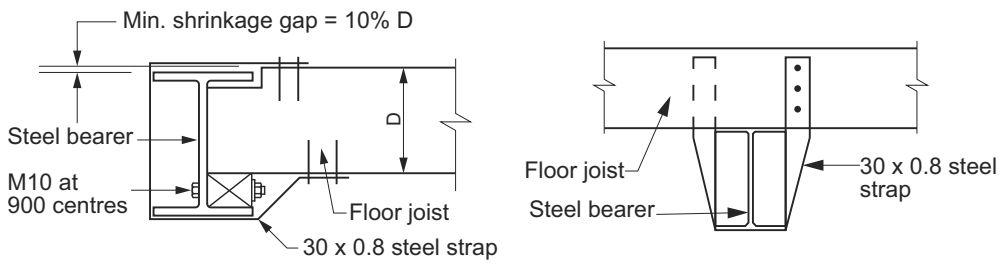

(a) Example A **(b) Example B**

Figure 6.3.7b: Strutting beam supporting roof and ceiling

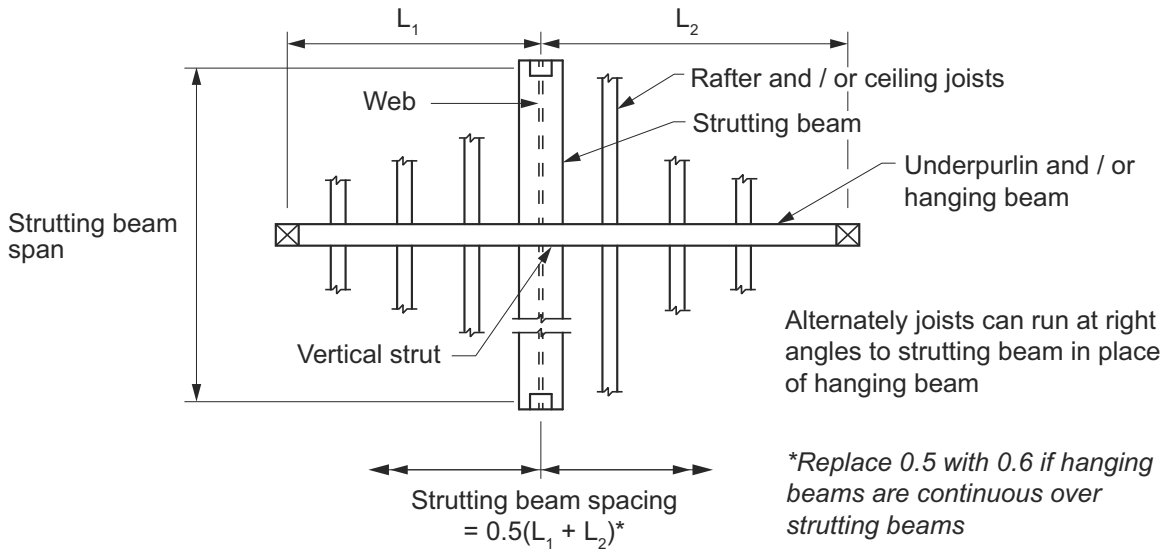

Figure 6.3.7c: End cuts to strutting beams

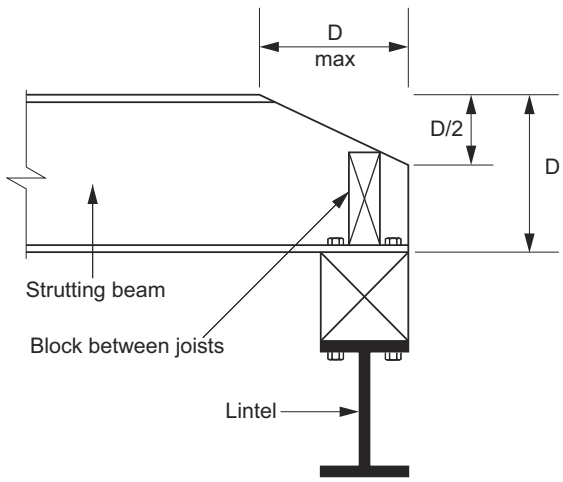

Figure Notes

Strutting beam top plate to be tied down in accordance with 6.3.4.

Figure 6.3.7d: Lintels supporting roof, frames and timber floors

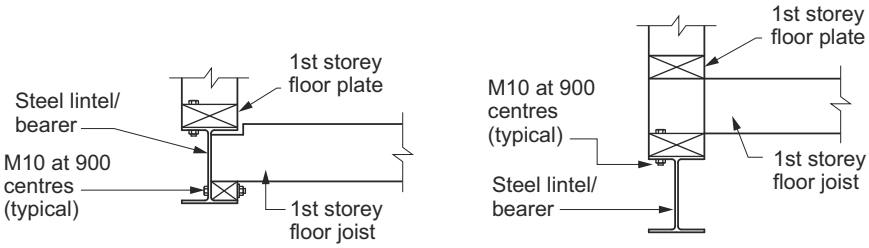

(a) Floor – example A **(b) Floor – example B**

Figure 6.3.7e: Lintels supporting roof, frames and timber floors — sections

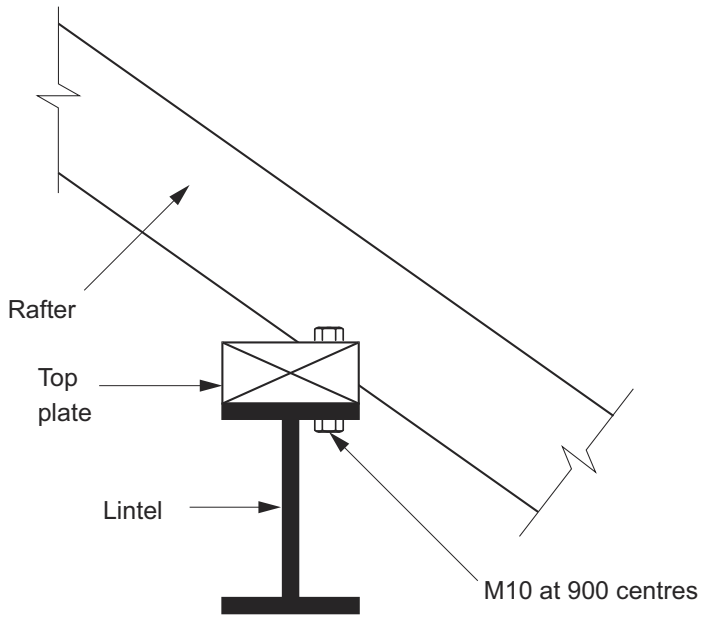

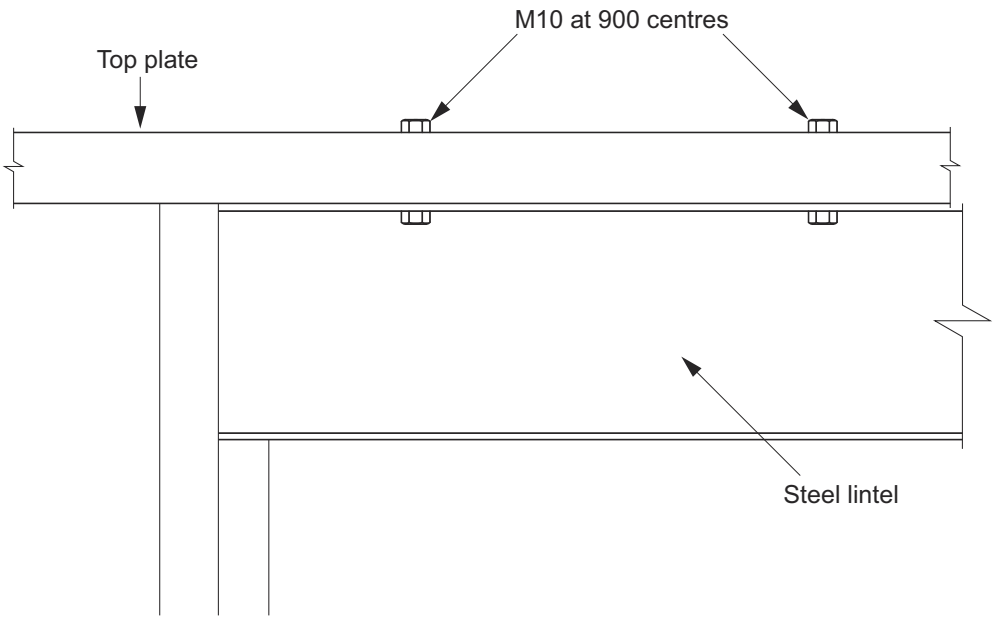

Figure 6.3.7f: Typical universal beam to column connection detail

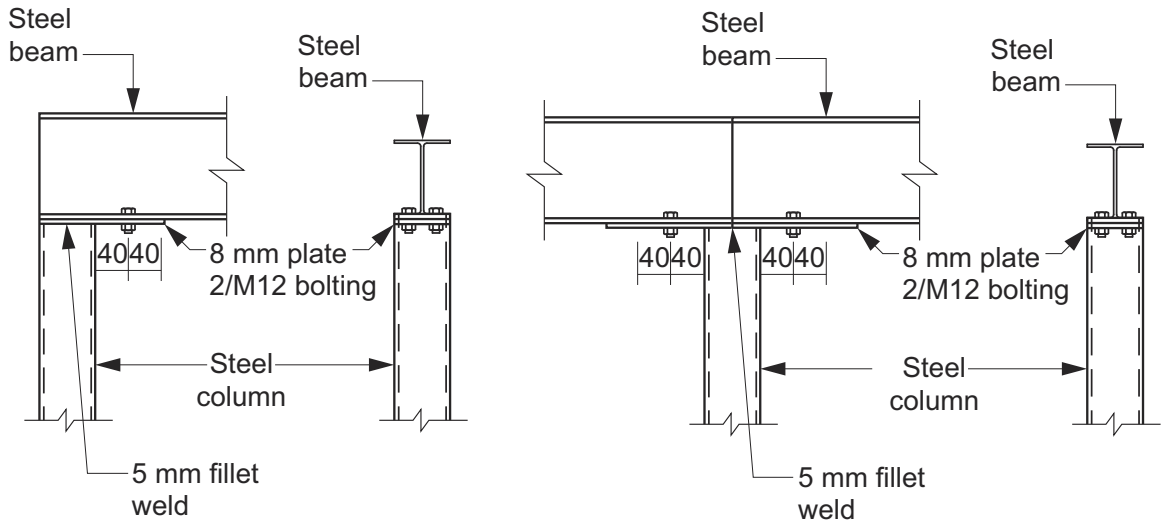

Figure Notes

(1) 8 mm steel plates to be welded to the top and bottom of the column using 5 mm fillet welds.

(2) Plate width must be the greater of the column width or the beam width.

(3) Plate length must be such that there is not less than 40 mm from the centreline of the bolts to the ends.

(4) All bolting between structural steel members must be not less than 2 M12 4.6/S.

Figure 6.3.7g: Typical PFC and RHS beam to column connection detail

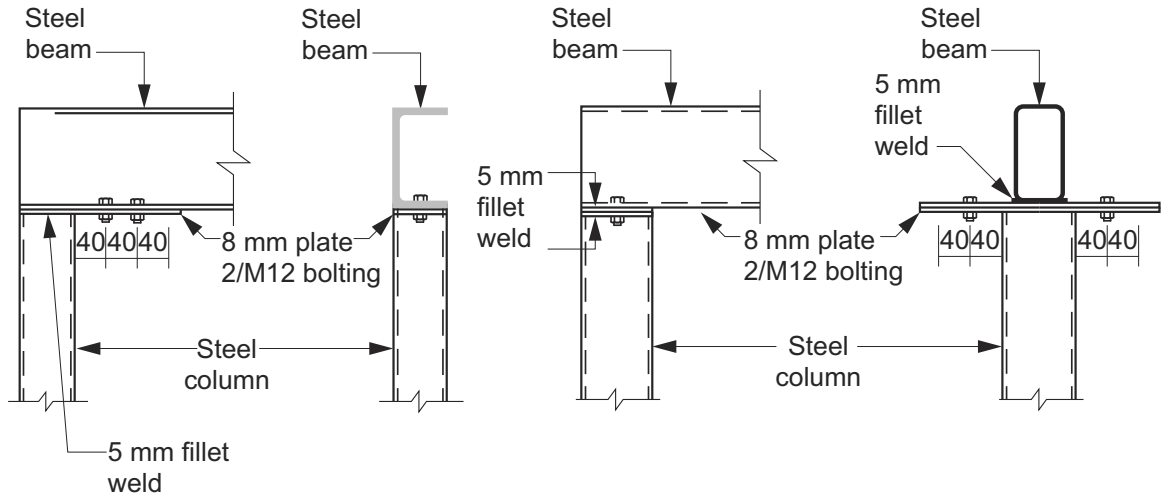

Figure 6.3.7h: Typical column base plate detail

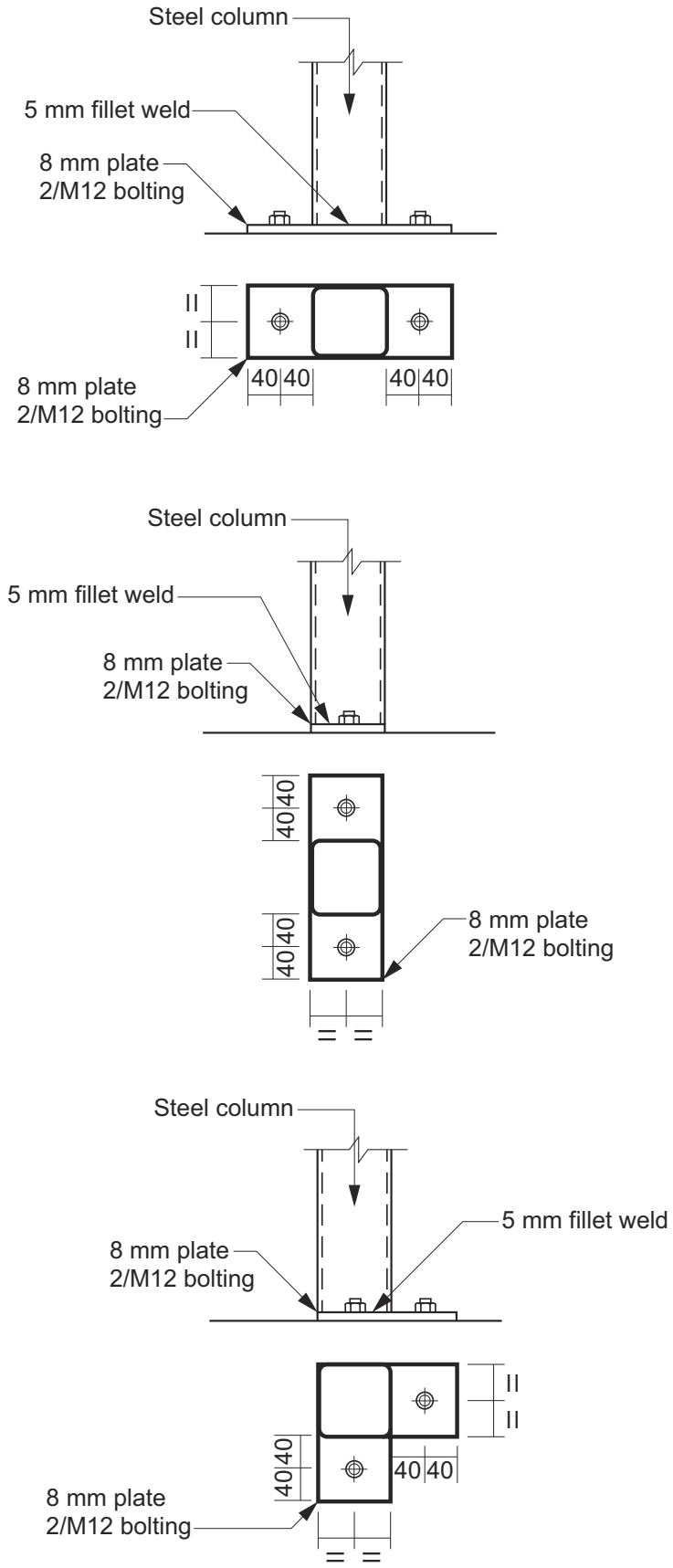

Figure Notes

Fixing of the column base plate to the slab must be not less than 2 M12 4.6/S post-installed mechanical anchors.

Explanatory Information

The ends of bearers and lintels must be sufficiently supported to ensure structural loads are transferred to the footing system. The amount of horizontal bearing (measured in millimetres) required on the vertical supports will depend on the type of span of the bearer or lintel. For single spans, the amount of horizontal bearing is to be equal to or greater than the width of the bearer or lintel. For continuous spans it is to be twice the width of the bearer or lintel.

For bearing distance, see 6.3.7(4)(a) and (b).

Explanatory Figure 6.3.7 depicts an example of a 200 PFC bearer or lintel supporting floor or roof loads over a single span.

Figure 6.3.7 (explanatory): Example of a 200 PFC bearer or lintel supporting floor or roof loads over a single span

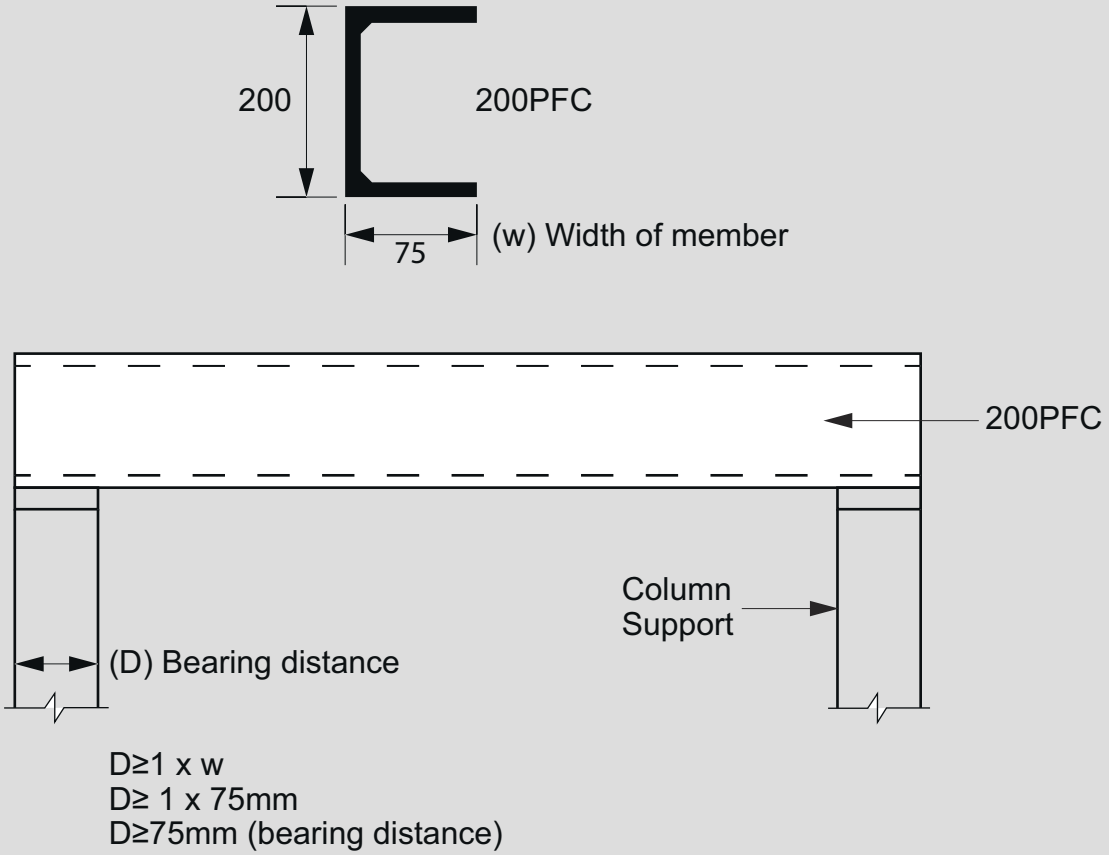

6.3.8 Penetrations through structural steel members

[New for 2022]

Penetrations through structural steel members must be within the allowable zones in Figure 6.3.8.

Figure 6.3.8: Allowable zones for penetrations through structural steel members

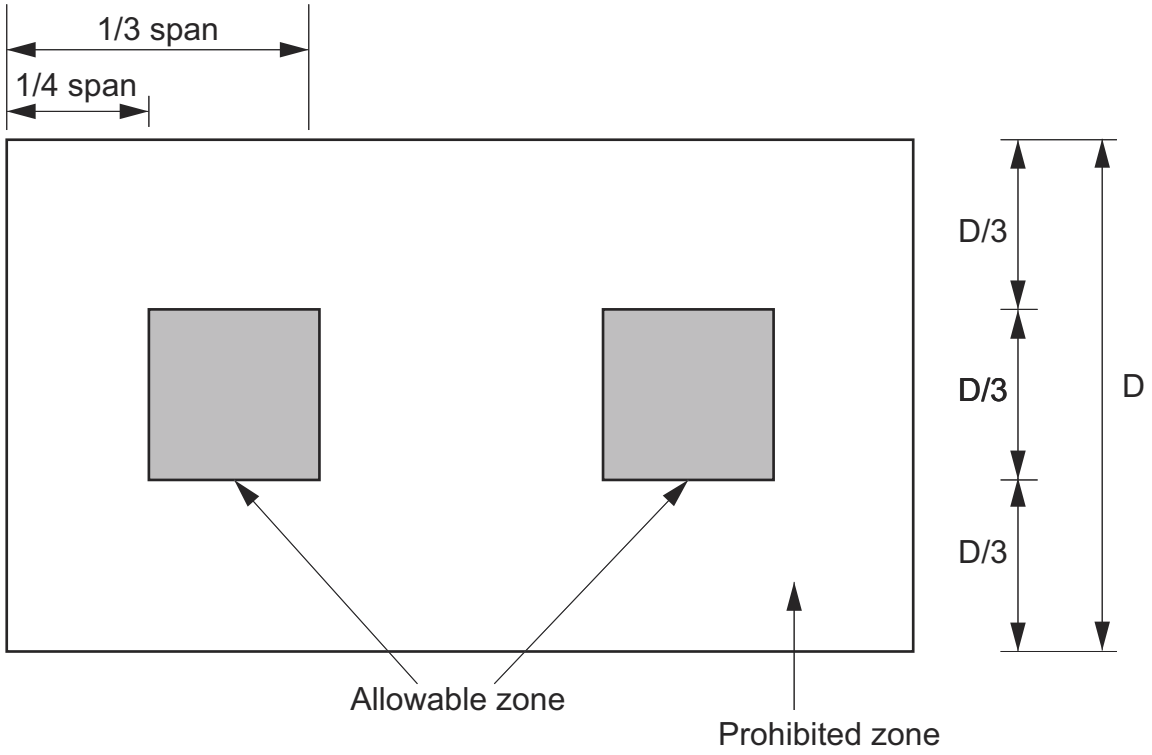

Explanatory Information

Cutting and penetrations in structural steel should be avoided where possible. Figure 6.3.8 provides permissible zones for penetrations through structural steel. However, it is recommended that a suitable qualified professional be consulted where penetrations or cuts are required to be made on site.

6.3.9 Corrosion protection

[2019: 3.4.4.4]

Structural steel members that are not built in to a masonry wall must—

(a) be protected against corrosion in accordance with Tables 6.3.9a, 6.3.9b and 6.3.9c; and

(b) where a paint finish is applied to the surface, be free from rust; and

(c) where zinc coatings are applied to the surface, be provided with a barrier coat to prevent domestic enamels from peeling; and

(d) when cut or welded on-site, have those areas and any other areas of damage to protective coatings comply with (a).

Table 6.3.9a: Minimum protective coatings for structural steel members

Environment	Location	Minimum protective coating		
		Option 1 (hot dip galvanising)	Option 2 (duplex system). See Table 6.3.9c	Option 3 (paint). See Table 6.3.9b
Low (mild steel corrosion rate 1.3 to 25 µm/year	Typically remote inland areas or more than 1 km from sheltered bays	HDG75	–	ACL2, ACC2, IZS1, PUR2A

Environment	Location	Minimum protective coating		
		Option 1 (hot dip galvanising)	Option 2 (duplex system). See Table 6.3.9c	Option 3 (paint). See Table 6.3.9b
Medium (mild steel corrosion rate 25 to 50 µm/year)	Typically more than 1 km from *breaking surf* or aggressive industrial areas or more than 50 m from sheltered bays	HDG225	–	ACL3, ACC4, ACC5, IZS1, PUR3, PUR4
High (mild steel corrosion rate 50 to 80 µm/year)	Typically more than 200 m from *breaking surf* or aggressive industrial areas or within 50 m from sheltered bays	HDG450	HDG150 (5 years) 4D (10-15 years) or HDG300 (10 years) 2D (5-10 years)	ACC6, IZS3, PUR5
Very High (mild steel corrosion rate 80 to 200 µm/year)	Typically extends from 100 m inland from *breaking surf* to 200 m inland from *breaking surf*, or within 200 m of aggressive industrial areas and within 100 m of *breaking surf*.	HDG900	HDG300 (5 years) 5D (10-15 years) or HDG600 (10 years) 4D (5-10 years)	ACC6 (C5-M only), PUR5

Table Notes

Hot dip galvanising and duplex systems must be in accordance with AS 2312.2. Paint systems must be in accordance with AS 2312.1.

Table 6.3.9b: Paint coating system specification

AS 2312.1 system	Surface preparation	1st coat		2nd coat		3rd coat		Total DFT
		Type of paint	DFT	Type of paint	DFT	Type of paint	DFT	
ACC2	Sa 2.5	Epoxy primer	75	Acrylic (2 pack)	50	–	–	125
ACC4	Sa 2.5	Epoxy primer	75	High build epoxy	125	Acrylic (2 pack)	50	250
ACC5	Sa 2.5	Zinc rich primer	75	High build epoxy	125	Acrylic (2 pack)	50	250
ACC6	Sa 2.5	Zinc rich primer	75	High build epoxy	200	Acrylic (2 pack)	50	325
ACL2	Sa 2.5	Zinc rich primer	75	Acrylic latex	40	Acrylic latex	40	155
ACL3	Sa 2.5	Zinc rich primer	75	High build epoxy	125	Acrylic latex	40	240
IZS1	Sa 2.5	Inorganic zinc silicate	75	–	–	–	–	75
IZS3	Sa 2.5	Inorganic zinc silicate	125	–	–	–	–	125
PUR2A	Sa 2.5	Zinc rich primer	75	High build polyurethane	75	–	–	150
PUR3	Sa 2.5	Epoxy primer	75	High build epoxy	125	Polyurethane gloss	50	250
PUR4	Sa 2.5	Zinc rich primer	75	High build epoxy	125	Polyurethane gloss	50	250
PUR5	Sa 2.5	Zinc rich primer	75	High build epoxy	200	Polyurethane gloss	50	325

Table Notes

DFT refers to dry film thickness, measured in µm.

Table 6.3.9c: Duplex coating system specification

AS 2312.2 duplex system	Surface preparation	1st coat		2nd coat		3rd coat		Total DFT
		Type of paint	DFT	Type of paint	DFT	Type of paint	DFT	
2D	Degrease, wash and dry, sweep blast clean	Epoxy primer (2 pack) inhibitive	75	Polyurethane or acrylic gloss (2 pack)	100	–	–	175
4D	Degrease, wash and dry, sweep blast clean	High-build epoxy (2 pack)	250	Polyurethane or acrylic gloss (2 pack)	100	–	–	350
5D	Degrease, wash and dry, sweep blast clean	Epoxy primer (2 pack) inhibitive	75	High-build epoxy (2 pack)	225	Polyurethane or acrylic gloss (2 pack)	100	400

Table Notes

DFT refers to dry film thickness, measured in µm.

Notes

Clause 3.4.4.4 and Table 3.4.4.7 from NCC Volume Two 2019 (Amendment 1) may be used in place of 6.3.9 and Tables 6.3.9a, 6.3.9b and 6.3.9c until 1 May 2024.

7 Roof and wall cladding

Part 7.1 Scope and application of Section 7

7.1.1 Scope
7.1.2 Application

Part 7.2 Sheet roofing

7.2.1 Application of Part 7.2
7.2.2 Corrosion protection and compatibility requirements for roofing
7.2.3 Minimum pitches for metal sheet roofing profiles
7.2.4 Maximum spans
7.2.5 Fixing of metal sheet roofing
7.2.6 Installation of roofing sheets
7.2.7 Flashings and cappings
7.2.8 Water discharge

Part 7.3 Roof tiles and shingles

7.3.1 Application
7.3.2 Fixing of roof tiles and ancillaries
7.3.3 Flashing
7.3.4 Sarking
7.3.5 Anti-ponding device/board
7.3.6 Water discharge

Part 7.4 Gutters and downpipes

7.4.1 Application
7.4.2 Materials
7.4.3 Selection of guttering
7.4.4 Installation of gutters
7.4.5 Downpipes – size and installation
7.4.6 Acceptable continuous overflow measure
7.4.7 Acceptable dedicated overflow measure per downpipe

Part 7.5 Timber and composite wall cladding

7.5.1 Application
7.5.2 Timber wall cladding
7.5.3 Wall cladding boards
7.5.4 Sheet wall cladding
7.5.5 Eaves and soffit linings
7.5.6 Flashings to wall openings
7.5.7 Clearance between cladding and ground
7.5.8 Parapet cappings

Part 7.1 Scope and application of Section 7

7.1.1 Scope

[New for 2022]

(1) This Section sets out the *Deemed-to-Satisfy Provisions* for—

(a) metal sheet roofing (see Part 7.2); and

(b) roof tiles (see Part 7.3); and

(c) gutters and downpipes (see Part 7.4); and

(d) timber and composite wall cladding (see Part 7.5).

(2) For other roof and wall cladding provisions not included in this Section, refer to NCC Volume Two H1D7(5) Metal wall cladding.

Explanatory Information

This Part contains requirements including weatherproofing and structural requirements, for wall and roof systems. Gutter and downpipe requirements are also contained in this Part.

It should be noted that other construction methods may be used to achieve the same results as specified in this Part provided they comply with the appropriate *Performance Requirements*.

7.1.2 Application

[New for 2022]

The application of this Section is subject to the following:

(a) The Governing Requirements of NCC Volume Two.

(b) The State and Territory variations, additions and deletions contained in the Schedules to the ABCB Housing Provisions and NCC Volume Two.

Explanatory Information

In NCC 2019, the content of Section 7 of the ABCB Housing Provisions (other than content added in NCC 2022 or later) was contained in the acceptable construction practices for Parts 3.5.1 to 3.5.4 of NCC 2019 Volume Two.

NCC 2019 Volume Two did not include an acceptable construction practice for Part 3.5.5.

Part 7.2 Sheet roofing

7.2.1 Application of Part 7.2

[New for 2022]

(1) Part 7.2 applies subject to the limitations set out in H1D7(2)(c).

(2) Part 7.2 need not be complied with if H1D7(2)(a) or (b) are complied with.

Explanatory Information: Design wind speeds

Information on *design wind speeds* for particular areas may be available from the *appropriate authority*. Also see the table associated with the definition of '*design wind speed*' for wind classes. A map indicating wind regions of Australia is contained in Part 2.2.

Explanatory Information: Other relevant sheet roof requirements

In addition to the requirements of this Part, requirements for sheet roofing also exist in NCC Volume Two and other Parts of the ABCB Housing Provisions. They include the following:

(a) For the sizing and fixing of roof battens - NCC Volume Two H1D6(3) (steel battens) and H1D6(4) (timber battens)

(b) For sheet roofing over a *separating wall* - ABCB Housing Provisions Part 9.3.

(c) For gutters and downpipes - ABCB Housing Provisions Part 7.4.

7.2.2 Corrosion protection and compatibility requirements for roofing

[2019: 3.5.1.2]

(1) Metal sheet roofing must be protected from corrosion in accordance with Table 7.2.2a.

(2) Where different metals are used in a roofing system, including *flashings*, fasteners, guttering, downpipes, etc., they must be compatible with each other as described in Table 7.2.2b, Table 7.2.2c, Table 7.2.2d, to and Table 7.2.2e and—

(a) no lead materials can be used upstream from aluminium/zinc coated materials; and

(b) no lead materials can be used on roofs that form part of a *drinking water* catchment area; and

(c) no copper materials can be used upstream from galvanized coated materials.

Table 7.2.2a: Acceptable corrosion protection for metal sheet roofing

Environment	Location	Minimum metal coating in accordance with AS 1397: Metallic coated steel	Minimum metal coating in accordance with AS 1397: Metallic and organic coated steel
Low (mild steel corrosion rate 1.3 to 25 µm/y)	Typically remote inland areas or more than 1 km from sheltered bays.	Z450 galvanised or AZ150 aluminium/zinc or AM125 aluminium/zinc/magnesium	Z275 galvanised or AZ150 aluminium/zinc or AM100 aluminium/zinc/magnesium
Medium (mild steel corrosion rate 25 to 50 µm/y)	Typically more than 1 km from *breaking surf* or aggressive industrial areas or more than 50 m from sheltered bays.	Z450 galvanised or AZ150 aluminium/zinc or AM125 aluminium/zinc/magnesium	Z275 galvanised or AZ150 aluminium/zinc or AM100 aluminium/zinc/magnesium

Environment	Location	Minimum metal coating in accordance with AS 1397: Metallic coated steel	Minimum metal coating in accordance with AS 1397: Metallic and organic coated steel
High (mild steel corrosion rate 50 to 80 µm/y)	Typically more than 200 m from *breaking surf* or aggressive industrial areas or within 50 m from sheltered bays.	AZ150 aluminium/zinc or AM125 aluminium/zinc/magnesium	AZ150 aluminium/zinc or AM100 aluminium/zinc/magnesium
Very High (mild steel corrosion rate 80 to 200 µm/y)	Typically extends from 100 m inland from *breaking surf* to 200 m inland from *breaking surf*, or within 200 m of aggressive industrial areas.	Not suitable	AZ200 aluminium/zinc or AM150 aluminium/zinc/magnesium
Very High (mild steel corrosion rate 80 to 200 µm/y)	Typically within 100 m of *breaking surf*.	Not suitable	Not suitable

Table Notes

(1) Low — remote inland includes dry rural areas remote from the coast or sources of pollution. Many areas of Australia beyond at least 50 km from the sea are in this category, including most cities and towns such as Canberra, Ballarat, Toowoomba, Alice Springs and some suburbs of cities on sheltered bays such as Melbourne, Hobart, Brisbane and Adelaide that are more than 1 km from the sea. However each of these have many exceptions which are in more corrosive categories.

(2) Medium — urban inland, coastal or industrial typically coastal areas with low salinity around sheltered bays, such as Port Phillip Bay. This extends from about 50 m from the shoreline to a distance of about 1 km inland but seasonally or in semi-sheltered bays extends 3 to 6 km inland. Along ocean front areas with *breaking surf* and significant salt spray, it extends from 1 km inland to about 10 to 50 km depending on wind direction and topography. Much of the metropolitan areas of Wollongong, Sydney, Newcastle, Perth and the Gold Coast are in this category. This can extend to 30 to 70 km inland in South Australia while on some evidence, other southern Australian coastal zones are in this, or a more severe category. This also includes urban and industrial areas with low pollution and for several kilometres around large industries such as steel works and smelters.

(3) High typically occurs on the coast around sheltered bays. Category high extends up to 50 m inland from the shoreline. In areas of rough seas and surf it extends from several hundred metres to about 1 km inland. As with other categories the extent depends on wind, wave action and topography. The category will also be found inside industrial plants and can influence a distance of 1.5 km down wind of the plant.

(4) Very high is typical of offshore conditions and is found on the beachfront in regions of rough seas and surf beaches. It can extend inland for several hundred metres. It is also found in aggressive industrial areas with a pH of less than 5.

(5) All locations described in the table contain variations of greater corrosion severity. If significant, this must be addressed by designing for the most severe environment.

(6) In locations where metallic coatings are not a suitable form of corrosion protection, the roof sheeting must be of a type that has been designed and manufactured for such environments.

Table 7.2.2b: Acceptability of contact between different roofing materials – Stainless steel accessory or fastener

Cladding material	Atmosphere classification - Medium to very high as per Table 7.2.2a	Atmosphere classification - Low as per Table 7.2.2a
Copper and copper alloys	No	Yes
Stainless steel (300 series)	Yes	Yes
Zinc-coated steel and zinc	No	Yes
Zinc/aluminium coated steel	No	Yes

Cladding material	Atmosphere classification - Medium to very high as per Table 7.2.2a	Atmosphere classification - Low as per Table 7.2.2a
Aluminium/zinc (AZ) and aluminium/zinc/magnesium (AM) coated steel	No	Yes
Lead	Yes	Yes

Table Notes

(1) No — means the metal cannot be used in association with the other metal.

(2) Yes — means the metal can be used in association with the other metal.

Table 7.2.2c: Acceptability of contact between different roofing materials – Zinc-coated steel and zinc accessory or fastener

Cladding material	Atmosphere classification - Medium to very high as per Table 7.2.2a	Atmosphere classification - Low as per Table 7.2.2a
Copper and copper alloys	No	No
Stainless steel (300 series)	No	No
Zinc-coated steel and zinc	Yes	Yes
Zinc/aluminium coated steel	Yes	Yes
Aluminium/zinc (AZ) and aluminium/zinc/magnesium (AM) coated steel	Yes	Yes
Lead	No	Yes

Table Notes

(1) No — means the metal cannot be used in association with the other metal.

(2) Yes — means the metal can be used in association with the other metal.

Table 7.2.2d: Acceptability of contact between different roofing materials – Zinc/aluminium coated steel or aluminium/zinc (AZ) and aluminium/zinc/magnesium (AM) coated steel accessory or fastener

Cladding material	Atmosphere classification - Medium to very high as per Table 7.2.2a	Atmosphere classification - Low as per Table 7.2.2a
Copper and copper alloys	No	No
Stainless steel (300 series)	No	No
Zinc-coated steel and zinc	Yes	Yes
Zinc/aluminium coated steel	Yes	Yes
Aluminium/zinc (AZ) and aluminium/zinc/magnesium (AM) coated steel	Yes	Yes
Lead	No	No

Table Notes

(1) No — means the metal cannot be used in association with the other metal.

(2) Yes — means the metal can be used in association with the other metal.

Table 7.2.2e: Acceptability of contact between different roofing materials – Lead accessory or fastener

Cladding material	Atmosphere classification - Medium to very high as per Table 7.2.2a	Atmosphere classification - Low as per Table 7.2.2a
Copper and copper alloys	No	Yes
Stainless steel (300 series)	No	Yes
Zinc-coated steel and zinc	No	Yes
Zinc/aluminium coated steel	No	No
Aluminium/zinc (AZ) and aluminium/zinc/magnesium (AM) coated steel	No	No
Lead	Yes	Yes

Table Notes

(1) No — means the metal cannot be used in association with the other metal.

(2) Yes — means the metal can be used in association with the other metal.

Explanatory Information

To prevent corrosion due to adverse chemical reaction of materials used, 7.2.2(2) ensures that the metal roofing and other materials that come into contact with it, i.e. fasteners, *flashings* and cappings, etc. are compatible with each other.

7.2.3 Minimum pitches for metal sheet roofing profiles

[2019: 3.5.1.3]

Metal sheet roofing must comply with the minimum pitch requirements for the associated roof profile in accordance with Figure 7.2.3.

Figure 7.2.3: Minimum pitch requirements for metal roofing profiles

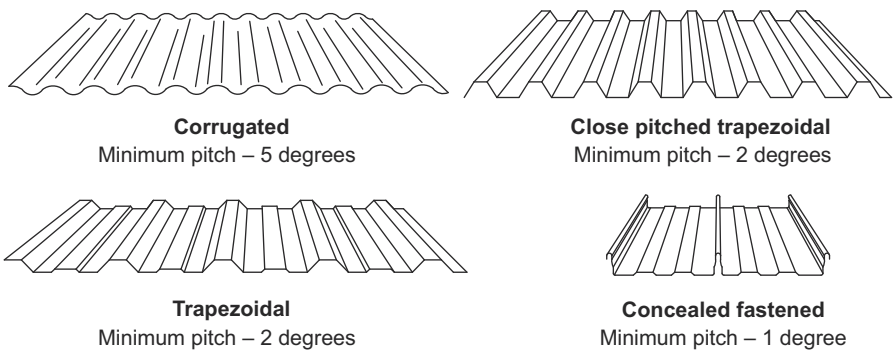

Figure Notes

(1) For minimum end lap requirements see 7.2.6(b)(ii).

(2) Consideration should be given to the drainage run off capacity of the roof sheeting when determining the minimum pitch and total length of the roof sheet.

7.2.4 Maximum spans

[2019: 3.5.1.4]

Metal sheet roofing must comply with the maximum span between roofing supports in accordance with Table 7.2.4 and

Figure 7.2.4.

Table 7.2.4: Maximum roofing spans between supports

Sheet roofing profile	Sheet roofing base metal thickness (mm)	Max. end span (mm) Note 1	Max. internal span (mm) Note 1
Corrugated	0.42	900	1200
Close pitched trapezoidal	0.42	1800	2400
Trapezoidal	0.42	1300	1700
Concealed fasteners — narrow sheet	0.42	1750	2100
Concealed fasteners — wide sheet	0.48	1800	2100

Table Notes

(1) Refer to Figure 7.2.4 for determination of end span and internal spans.

(2) Thermal expansion - Maximum sheet run for pierced fixed metal roofing profiles must be not greater than 25 m when measured between the fasteners at the ends of the sheet.

Figure 7.2.4: Maximum spans for roofing between supports

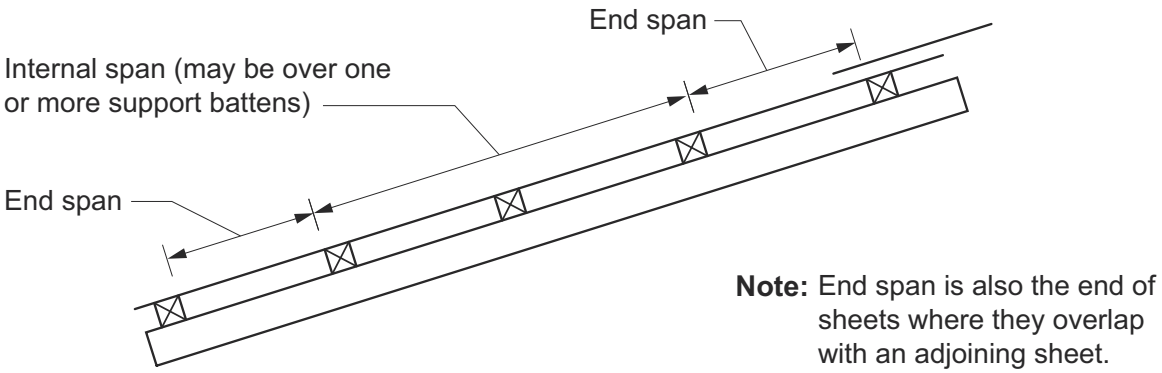

7.2.5 Fixing of metal sheet roofing

[2019: 3.5.1.5]

Metal sheet roofing must—

(a) be either fixed through the roofing (crest fastening) or have concealed fasteners; and

(b) be fixed at spacings in accordance with Table 7.2.5; and

(c) use fixings of a compatible metal to the roof in accordance with Tables 7.2.2b, 7.2.2c, 7.2.2d and 7.2.2e; and

(d) when using both clipped and pierced fastening systems, employ an anti-capillary feature in the side lap of the sheet (see Figure 7.2.5).

Table 7.2.5: Fixing requirements for sheet roofing

Sheet roofing profile	Fixing: End span	Fixing: Internal spans
Corrugated	Side lap and every second rib	Side lap and every third rib
Close pitched trapezoidal	Side lap and every second rib	Side lap and every third rib
Trapezoidal	Every rib	Every rib
Concealed fasteners	Every rib	Every rib

Figure 7.2.5: Side lap fastening detail

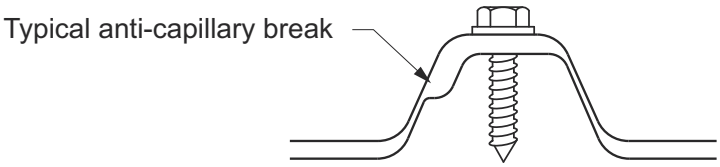

(a) Trapezoidal profile

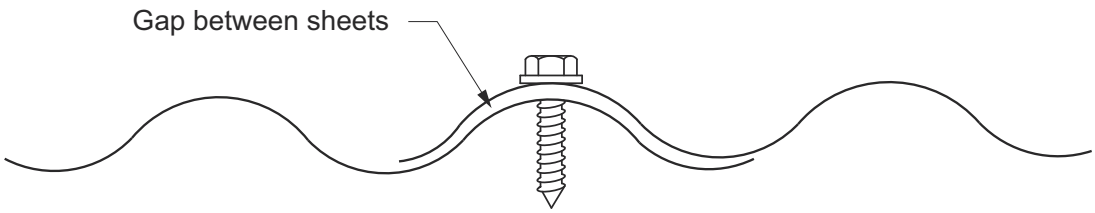

(b) Corrugated profile

Explanatory Information

An anti-capillary feature in the side lap of the sheet is used to prevent capillary action drawing moisture into the lap and to allow the lap to drain. This can also be achieved by not over tightening the sheet fixing.

Wherever possible, consideration should be given to laying the metal sheet roofing so that the side lap is facing away from prevailing weather.

7.2.6 Installation of roofing sheets

[2019: 3.5.1.6]

Sheets must be—

(a) laid wherever possible using complete lengths from the fascia to ridge; or

(b) where a complete length cannot be laid—

(i) each run must be laid from bottom to top before moving on to the next run (see Figure 7.2.6); and

(ii) the minimum end lap must be—

(A) for roof slopes above 15 degrees (1:4) – 150 mm; and

(B) for roof slopes between 5–15 degrees (1:12-1:4) – 200 mm; and

(c) stop ended (i.e. each valley turned up 60 degrees) at the ridge line of each length.

Figure 7.2.6: Sheet laying sequence

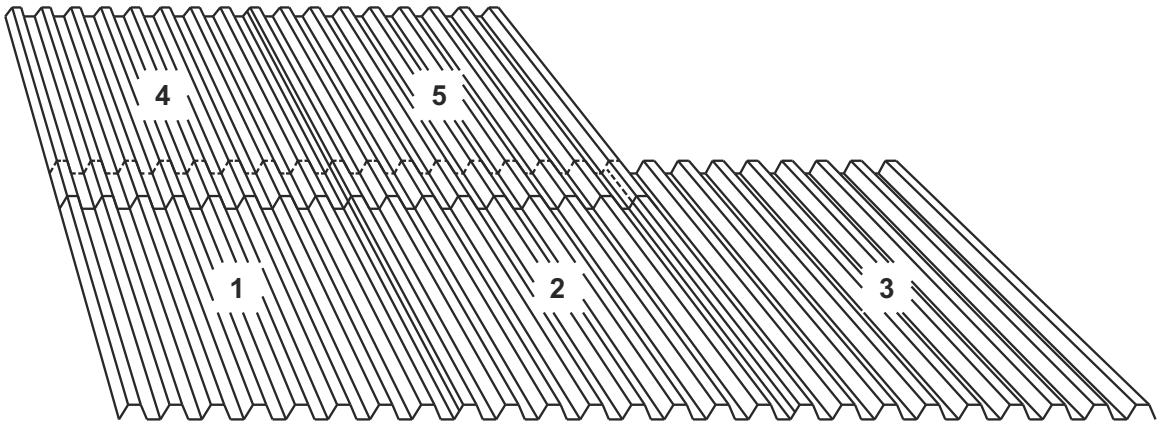

7.2.7 Flashings and cappings

[2019: 3.5.1.7]

(1) Sheet metal roof *flashings* and cappings must comply with the following:

(a) Roof *flashings* and cappings must be purpose made, machine-folded sheet metal sections of material compatible with all up and downstream metal roof covering materials in accordance with 7.2.2(2).

(b) The type of fasteners for *flashing* and cappings must comply with 7.2.5.

(c) The fastener and fixing frequency for *flashings* and cappings must comply with Table 7.2.7.

(d) Joints in *flashings* and cappings must be not less than 75 mm, lapped in the direction of the fall of the roof, and fastened at intervals not more than 40 mm.

(e) Wall and step *flashings* must be fastened into masonry walls with galvanized or zinc/aluminium sheet metal wedges at each end of each length and at intermediate intervals of not more than 500 mm and must overlap by not less than 75 mm in the direction of flow.

(f) Lead *flashings* must not be used with prepainted steel or zinc/aluminium steel or on any roof if the roof is part of a *drinking water* catchment area.

(g) Anti-capillary breaks must be installed in accordance with Figure 7.2.7a and be—

(i) for flat surfaces – 10 mm/30 degree fold; and

(ii) all other surfaces – 10 mm/90 degree or 135 degree fold.

(h) Acceptable *flashing* configurations are shown in Figure 7.2.7b and Figure 7.2.7c.

(2) *Flashing* of penetrations must comply with the following:

(a) Collar *flashings* must permit the total drainage of the area above the penetration.

(b) On completion of installation, the roof structure must be restored to its original strength by installing roof trimmers and soaker supports as necessary.

(c) The type of fasteners for *flashings* and cappings must comply with 7.2.5.

(d) Lead *flashings* must not be used with prepainted steel or zinc/aluminium steel or on any roof if the roof is part of a *drinking water* catchment area.

(e) Acceptable *flashings* for penetrations are shown in Figure 7.2.7d, Figure 7.2.7e and Figure 7.2.7f.

(f) Clearance for heating appliance roof support members must be in accordance with Part 12.4.

Table 7.2.7: Fastener frequency for flashings and cappings

Roof type	Fixing frequency	Fastener type
Concealed fastener roofs	Every rib	Rivets and self-drilling screws
Pierced fastener roofs	Every second rib	Self-drilling screws or rivets
Corrugated roofs	Every fourth rib	Self-drilling screws or rivets

Figure 7.2.7a: Anti-capillary breaks

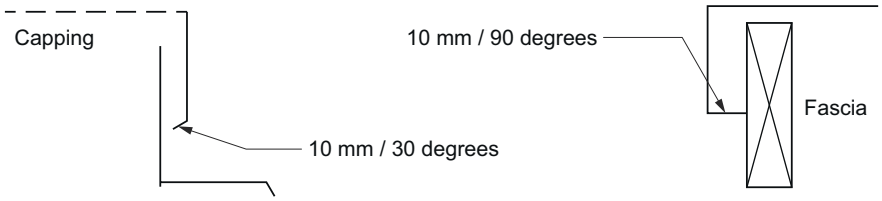

(a) Roof capping **(b) Fascia flashing**

Figure 7.2.7b: Parapet flashing—Acceptable flashing details

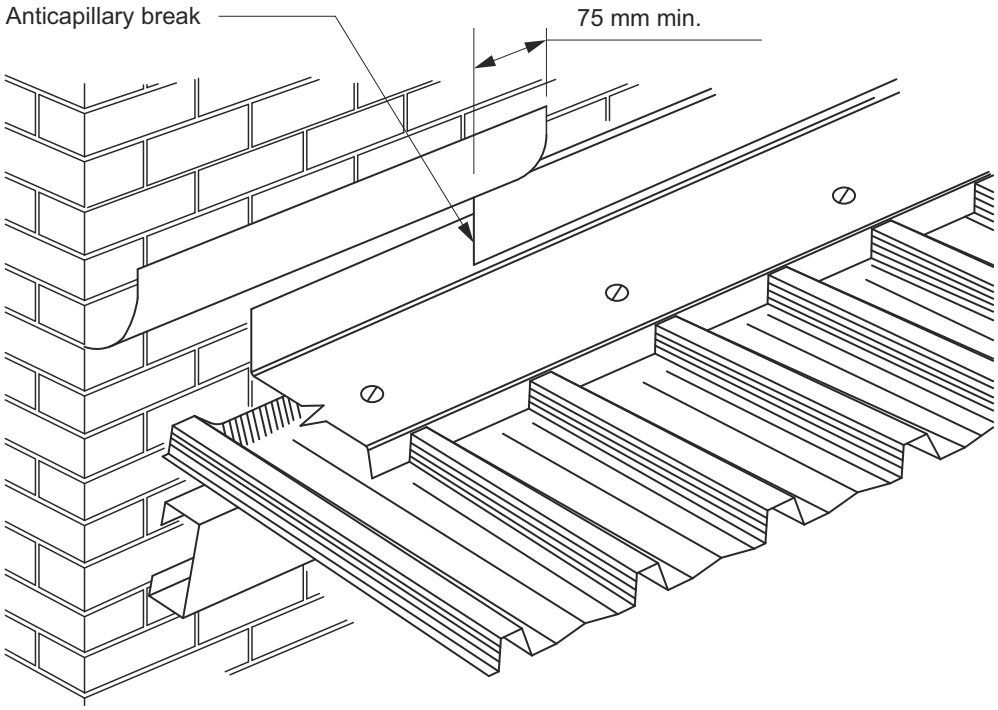

Figure 7.2.7c: Parapet and end wall flashing—Acceptable flashing details

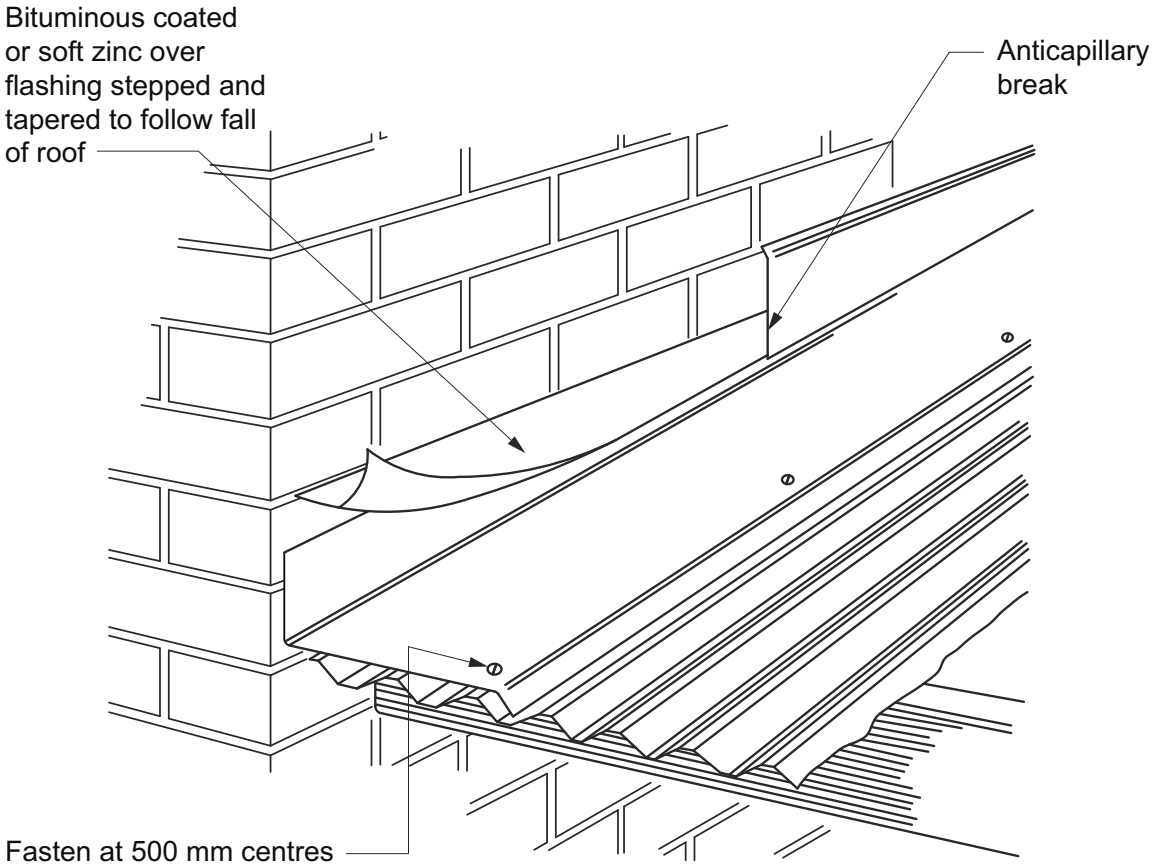

Figure 7.2.7d: PVC aprons—Typical roof penetration flashing details

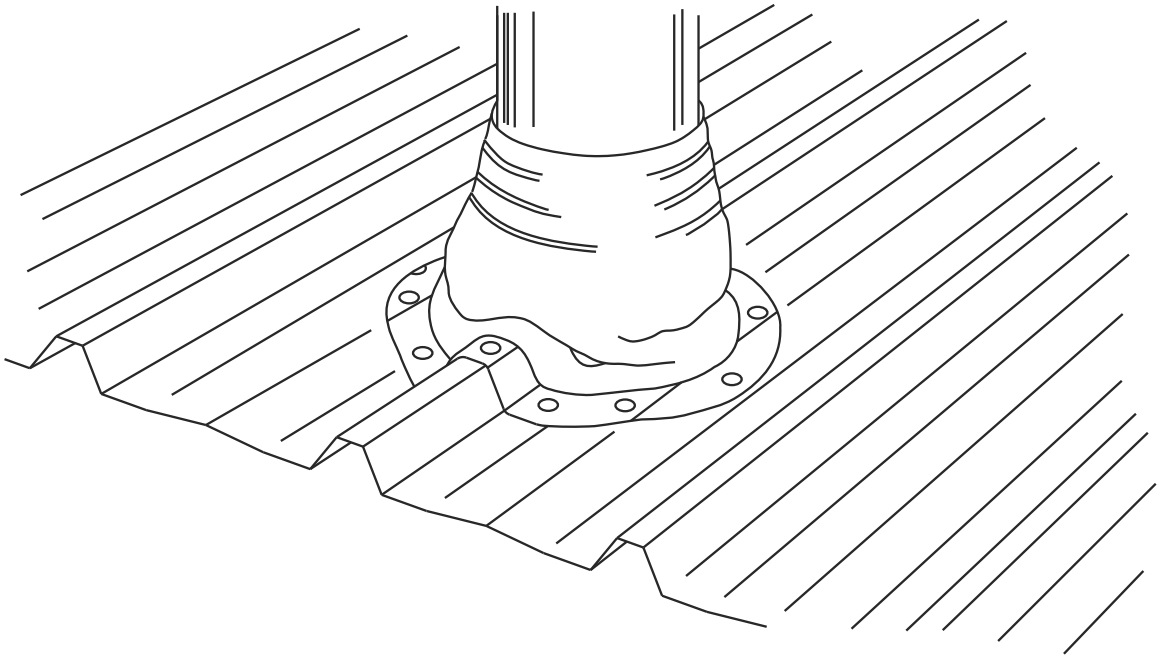

Figure 7.2.7e: Collar flashings—Typical roof penetration flashing details

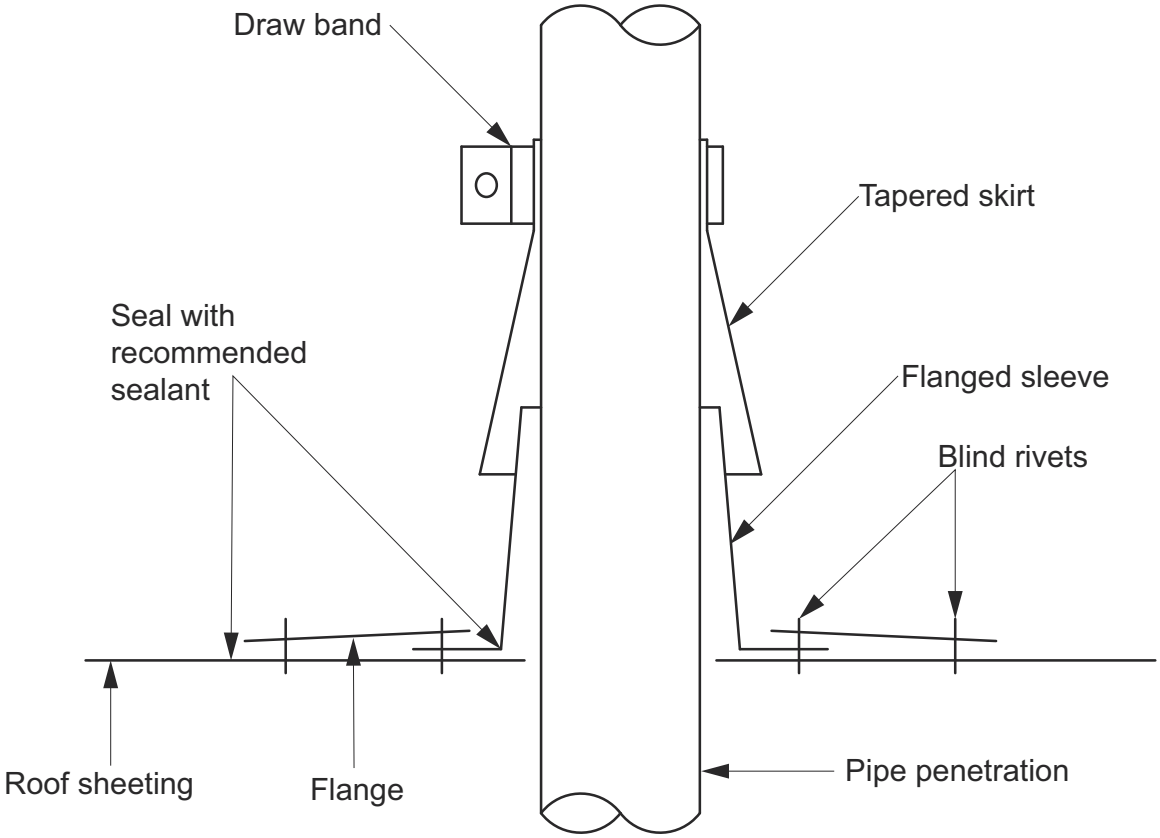

Figure 7.2.7f: Large penetrations using apron—typical roof penetration flashing details

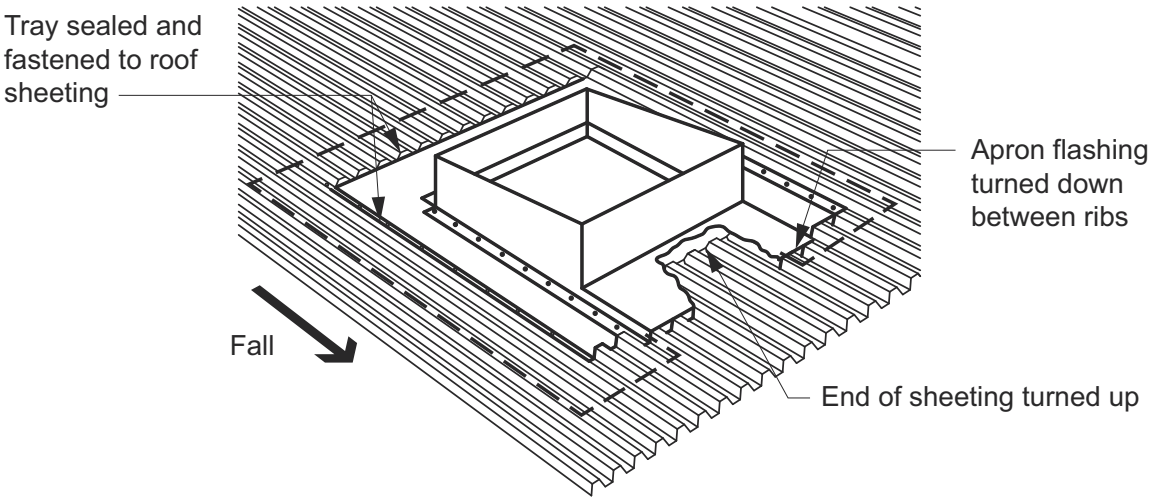

7.2.8 Water discharge

[2019: 3.5.1.8]

Where an eaves gutter is provided in accordance with H2D6(1), sheets must overhang the fascia, or end batten where there is no fascia, by not less than 50 mm.

Part 7.3 Roof tiles and shingles

7.3.1 Application

[New for 2022]

(1) Part 7.3 applies subject to the limitations set out in H1D7.

(2) Part 7.3 need not be complied with if H1D7(3)(a) or (b) are complied with.

Explanatory Information: Design wind speeds

Information on *design wind speeds* for particular areas may be available from the *appropriate authority*. Also see the table associated with the definition of '*design wind speed*' for wind classes. A map indicating wind regions of Australia is contained in Part 2.2.

Explanatory Information: Other relevant roof tile requirements

In addition to the requirements of this Part, requirements for roof tiles also exist in NCC Volume Two and other Parts of the ABCB Housing Provisions. They include the following:

- For the sizing and fixing of roof battens - NCC Volume Two H1D6(3) (steel battens) and H1D6(4) (timber battens).
- For sheet roofing over a *separating wall* - ABCB Housing Provisions Part 9.3.
- For gutters and downpipes - ABCB Housing Provisions Part 7.4.

7.3.2 Fixing of roof tiles and ancillaries

[2019: 3.5.2.2]

(1) Roof tiles and hip, ridge, barge and capping tiles must be fixed in accordance with Table 7.3.2 and Figure 7.3.2a, Figure 7.3.2b, Figure 7.3.2c, Figure 7.3.2d and Figure 7.3.2e.

(2) Fixing *required* by Table 7.3.2 must consist of one or a combination of the following:

(a) Galvanized clout nails with a minimum diameter of 2.8 mm and of a length so that the nail will penetrate not less than 15 mm into the batten.

(b) Self embedding head screws of 8-18 gauge and of a length so that the screw will penetrate not less than 15 mm into the batten.

(c) Purpose made clips of non-ferrous metal, stainless steel or steel protected from corrosion in accordance with Tables 7.2.2b, 7.2.2c and 7.2.2d.

(d) Flexible pointing material complying with AS 2050.

Table 7.3.2: Minimum fixing requirements

Wind class	Tile fixing - edge of roof	Tile fixing - field of roof	Ridge, hip, barge and valley tiles including capping (see Figure 7.3.2d and 7.3.2e)
N1 and N2	Fix every full tile in second course in from the edge of roof.	In field of roof fix every second tile in every course, or every tile in each alternative course. (see Figure 7.3.2b)	Fix each tile
N3	Fix each full tile in every second course starting from the second course in (see Figure 7.3.2c)	Fix every second full tile in every course (see Figure 7.3.2c)	Fix each tile

Table Notes

Refer to Figure 7.3.2a for determination of 'edge of roof' and 'field of roof'.

Figure 7.3.2a: Fixing of tile requirements — Identification of field and edge of roof

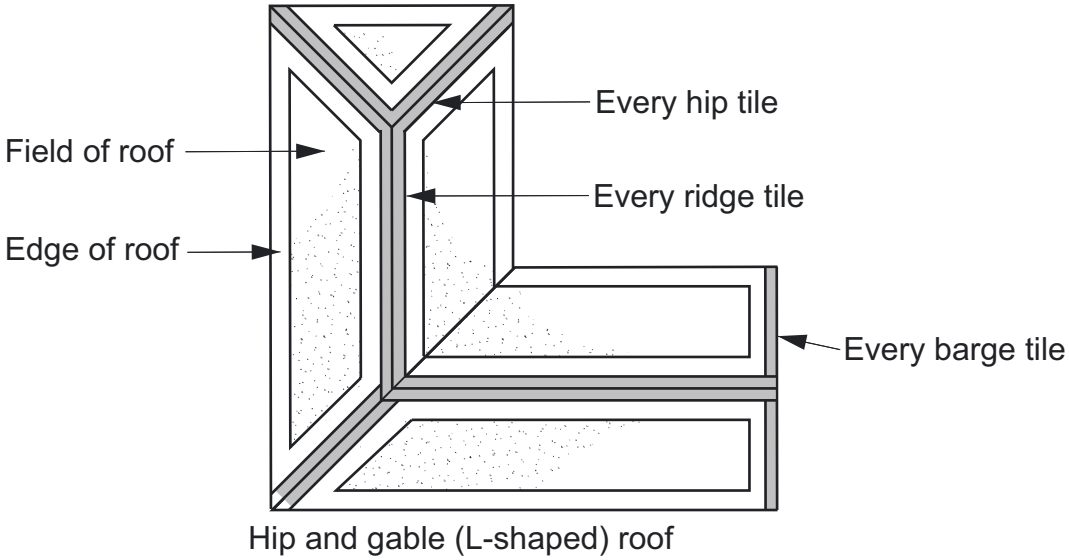

Figure 7.3.2b: Fixing of tile requirements — Minimum tile fixing requirements - Wind class N1/N2

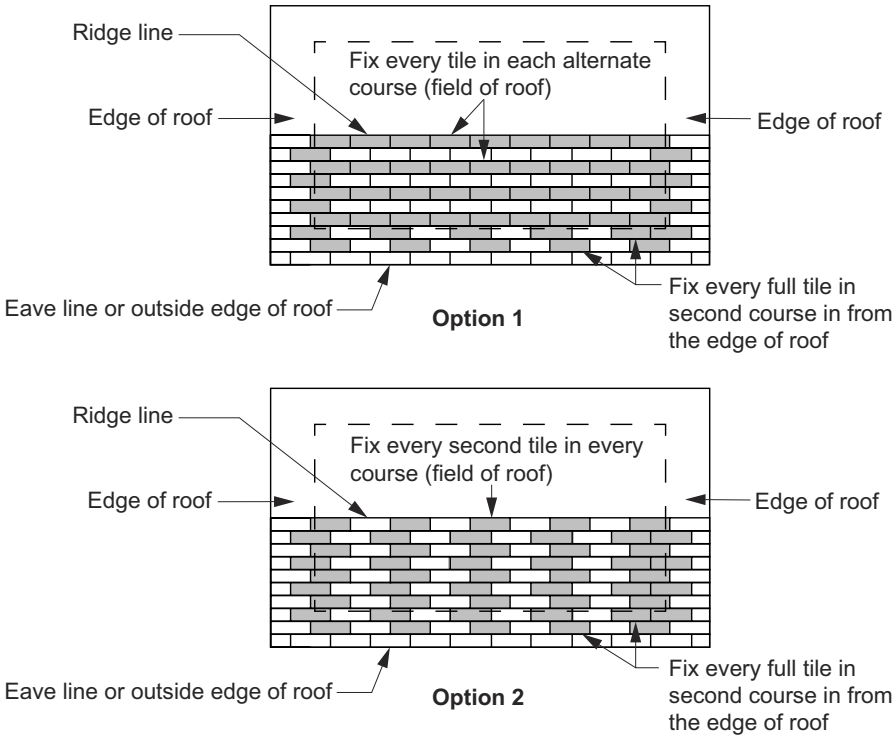

Figure 7.3.2c: Fixing of tile requirements — Minimum tile fixing requirements N3

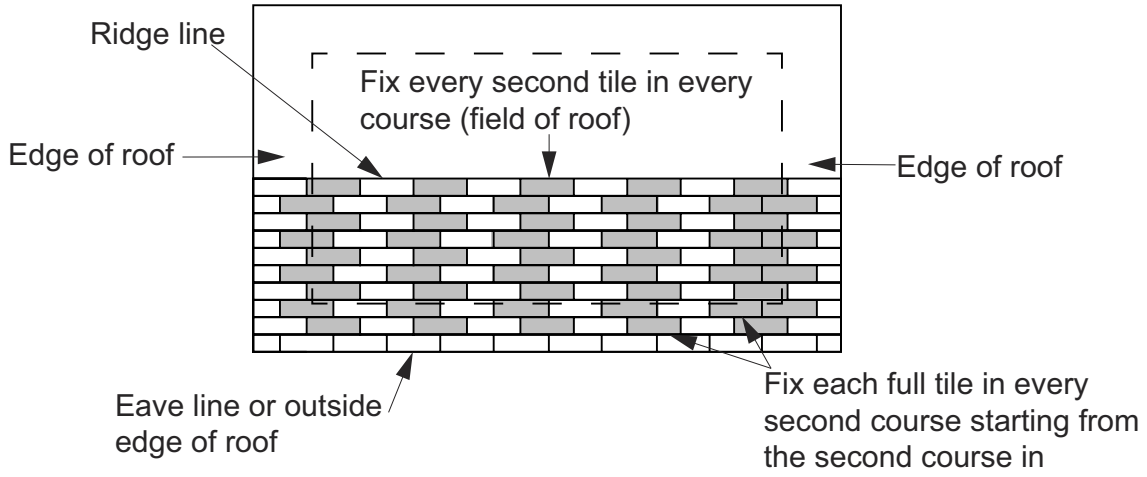

Figure 7.3.2d: Fixing of ridge capping — ridge clip fixing

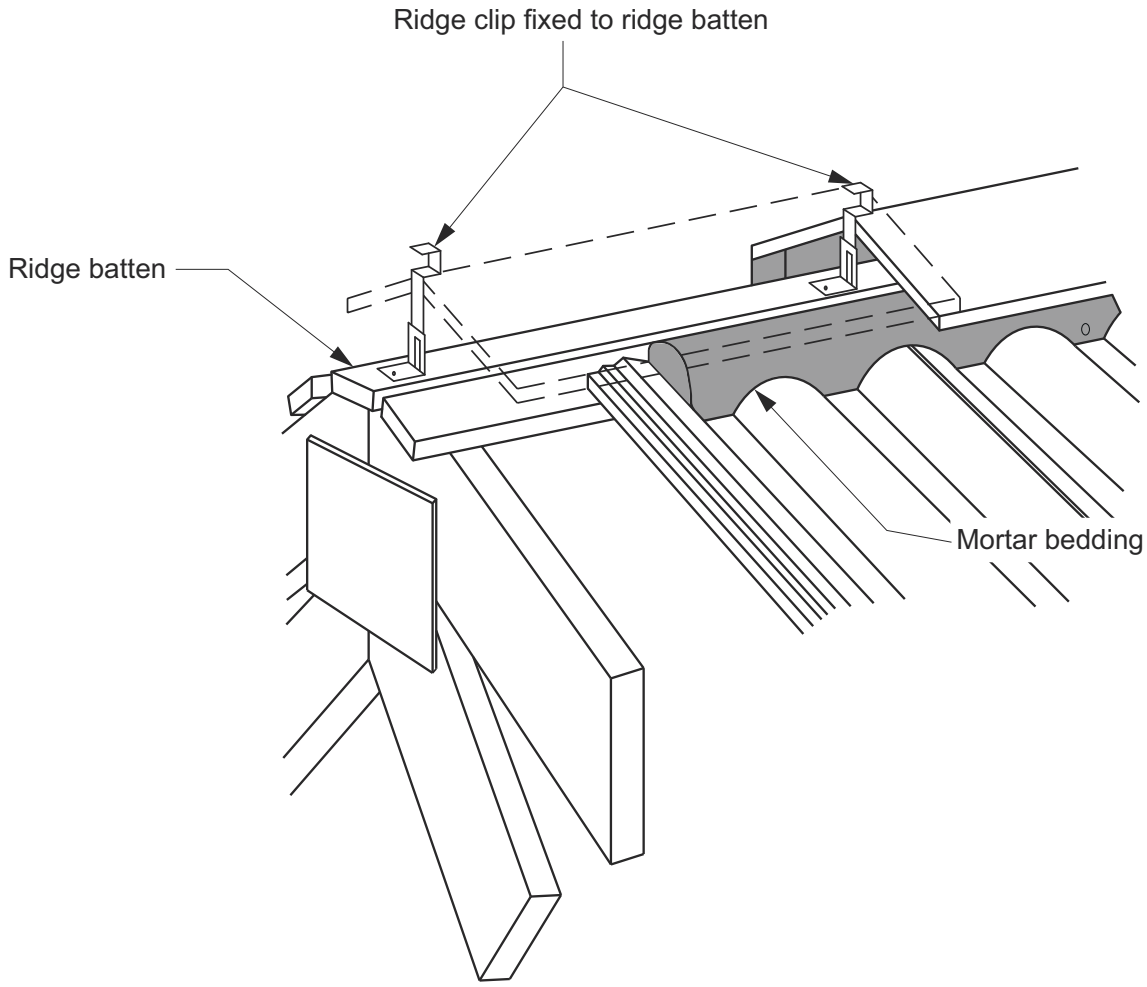

Figure 7.3.2e: Fixing of hip capping — clout or screw fixing

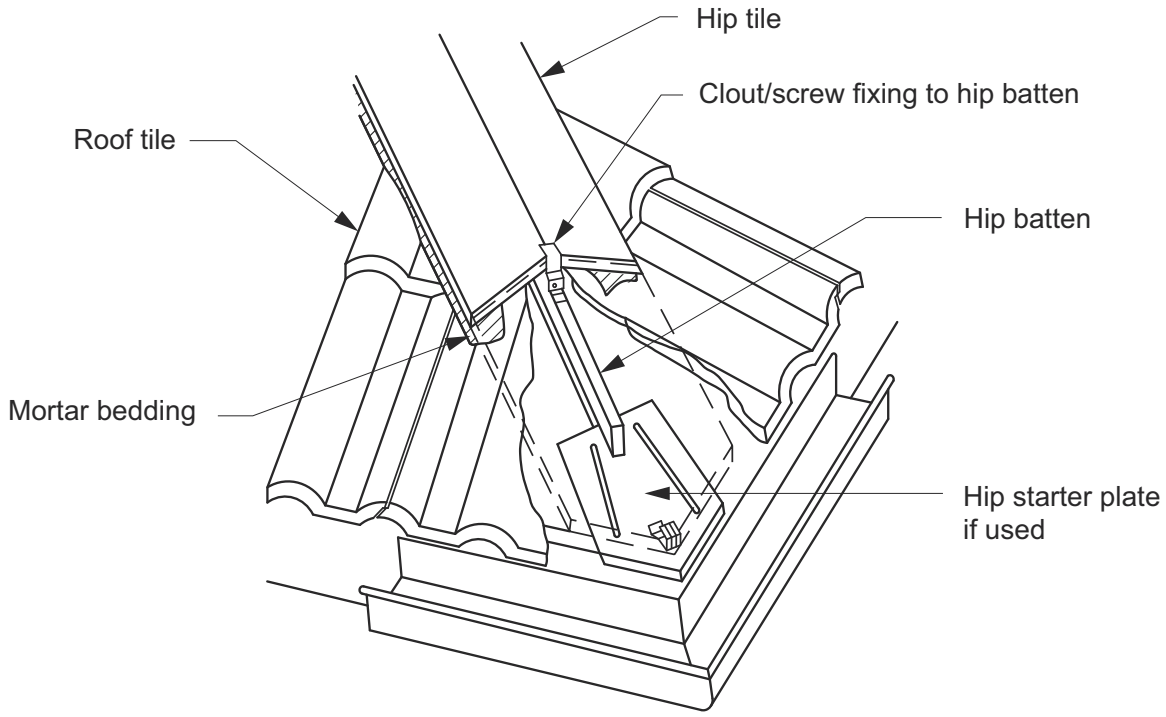

Explanatory Information

For the purposes of Figures 7.3.2a, 7.3.2b and 7.3.2c, 'edge of roof' is a 1.2 m wide band bounded by the eaves, hips and barge measured toward the 'ridge of roof'.

7.3.3 Flashing

[2019: 3.5.2.3]

(1) *Flashing* for roof tiles must comply with (2) to (7).

(2) Wall and step *flashings*:

(a) For masonry or similar walls, *flashing* must—

(i) follow the roof line, allowing not less than 75 mm upturn to the wall and a minimum of 150 mm in width and moulded into the tiles; and

(ii) have a horizontal overflashing, stepped overflashing or raked overflashing built into the masonry leaf or veneer, except that one continuous *flashing* may be used as both an apron *flashing* or an overflashing; and

(iii) have joints overlap the one below by not less than 75 mm in the direction of flow.

(b) For *flashing* where the upturn can be fixed to or behind the supporting frame or cladding, it must—

(i) follow the roof line, allowing not less than 75 mm upturn to the wall and a minimum of 150 mm in width and moulded into the tiles; and

(ii) be fastened into or behind the wall cladding at each end and at a maximum of 600 mm centres; and

(iii) have joints overlap the one below by not less than 75 mm in the direction of flow.

(3) *Flashing* of penetrations must—

(a) be either collar, apron or other purpose made *flashings*; and

(b) have a minimum upturn on the penetration of not less than 75 mm and a minimum of 150 mm in width surrounding the penetration and be moulded into the tiles; and

(c) permit the total drainage of the area above the penetration.

(4) Joints in *flashing* must be not less than 75 mm and lapped in the direction of fall of the roof.

(5) Fixings for *flashings* must be compatible with the *flashing* material.

(6) Lead *flashings* must not be used on any roof that is part of a *drinking water* catchment area.

(7) Acceptable *flashing* configurations, including typical details for standard, and bedded and pointed valleys, are shown in Figures 7.3.3a, 7.3.3b, 7.3.3c, 7.3.3d, 7.3.3e, 7.3.3f and 7.3.3g.

Figure 7.3.3a: Flashing abutting a masonry wall

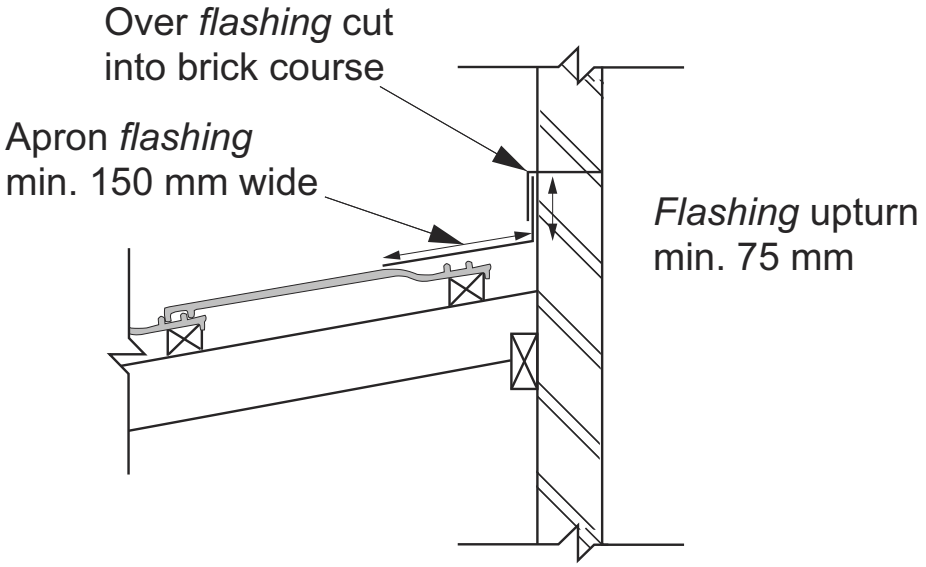

Figure 7.3.3b: Flashing abutting a weatherboard wall or similar cladding

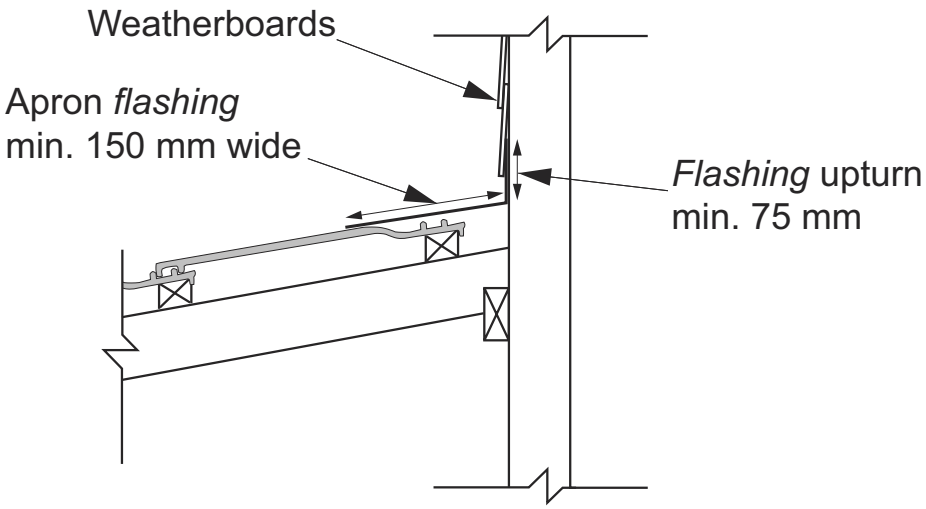

Figure 7.3.3c: Stepped flashing to a masonry wall

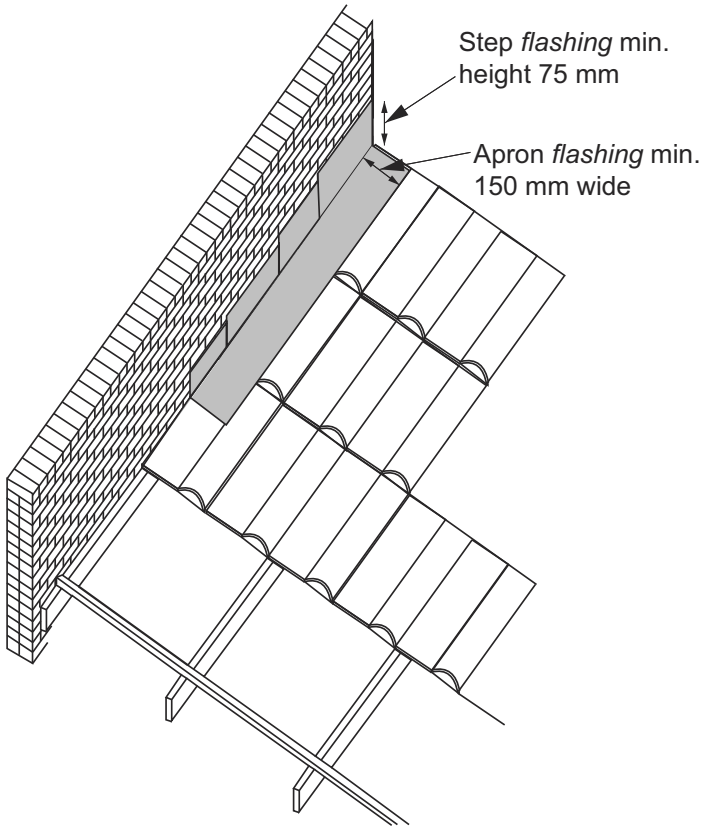

Figure 7.3.3d: Pipe penetration flashing

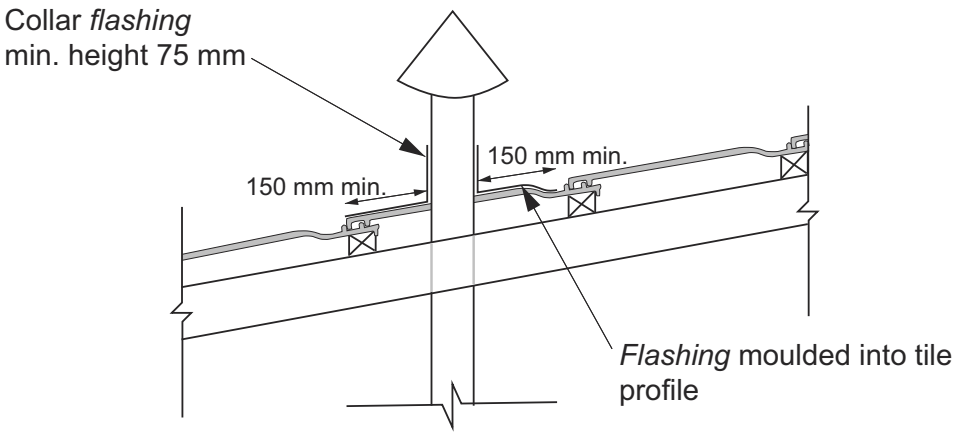

Figure 7.3.3e: Chimney flashing

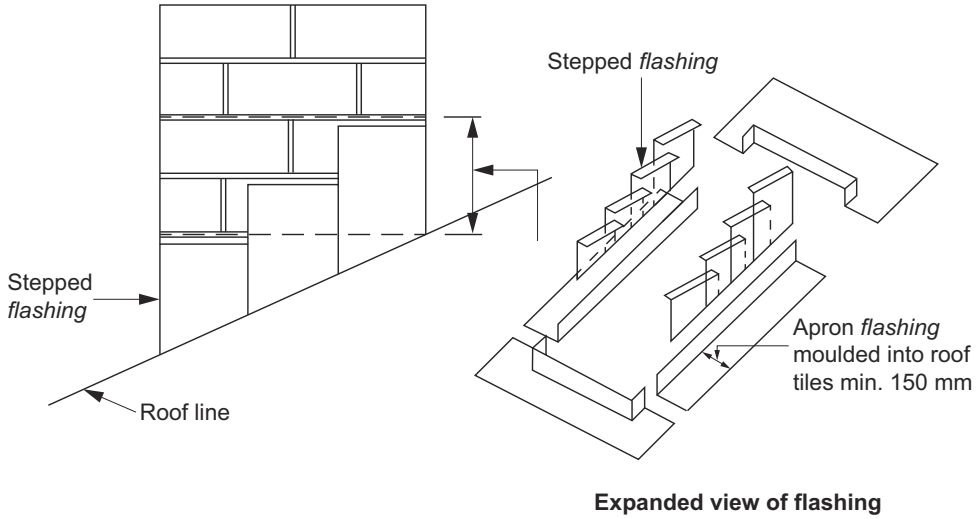

Figure 7.3.3f: Standard valley

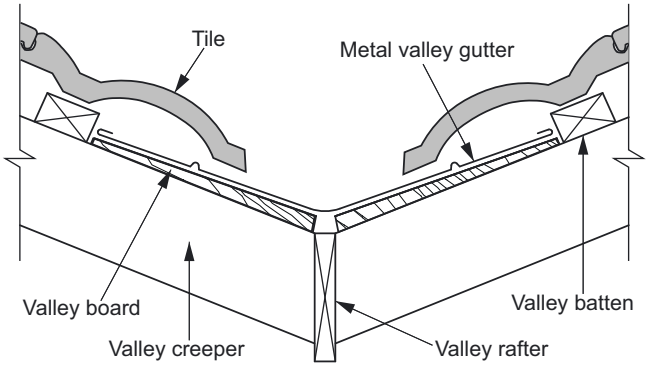

Figure 7.3.3g: Bedded and pointed valley for high rainfall areas (refer definition of low rainfall intensity area)

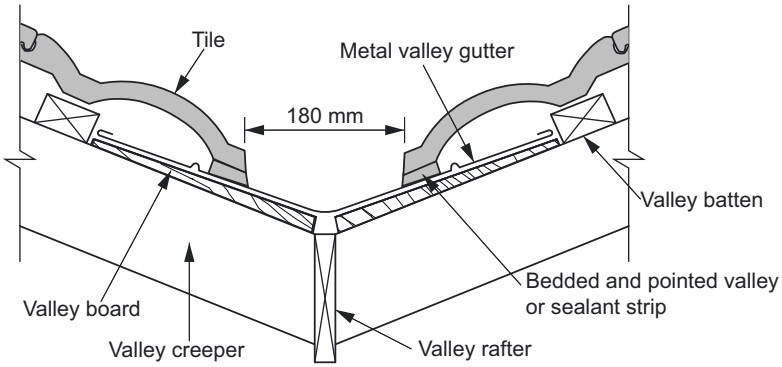

7.3.4 Sarking

[2019: 3.5.2.4]

Sarking must—

(a) be provided in accordance with Table 7.3.4; and

(b) comply with AS 4200.1 and be installed with—

(i) each adjoining sheet or roll being—

(A) overlapped not less than 150 mm; or

(B) taped together; and

(ii) sarking fixed to supporting members at not more than 300 mm centres; and

(iii) no sags more than 40 mm in the sarking.

Table 7.3.4: Sarking requirements for tiled roofs

Roof pitch	Maximum rafter/truss top chord length without sarking (mm) Note 1
<18°	N/A Note 2
≥18° <20°	4 500
≥20° <22°	5 500
≥22°	6 000

Table Notes

(1) The maximum rafter/truss top chord length is measured from the topmost point of the rafter/truss i.e. the apex downwards. Where the maximum length is exceeded, sarking must be installed over the remainder of the rafter/truss top chord length towards the eave line of the roof, or equivalent where the building has no eaves.

(2) All tiled roofs with a pitch less than 18 degrees must be provided with sarking, regardless of rafter/truss chord length.

Explanatory Information

Where sarking is also provided as *reflective insulation* for the purpose of energy efficiency, Section 13 of the ABCB Housing Provisions contains *required R-Values* and the necessary airspaces adjoining the *reflective insulation*.

7.3.5 Anti-ponding device/board

[2019: 3.5.2.5]

(1) An anti-ponding device/board must be provided where sarking is installed on—

(a) roofs with a pitch less than 20°; and

(b) roofs with no eaves overhang, regardless of the roof pitch.

(2) An anti-ponding device *required* by (1) must be *water resistant* and fixed along the eaves line from the top of the fascia back up the rafter with a clearance of approximately 50 mm below the first batten (See Figure 7.3.5).

Figure 7.3.5: Typical installation of anti-ponding device/board

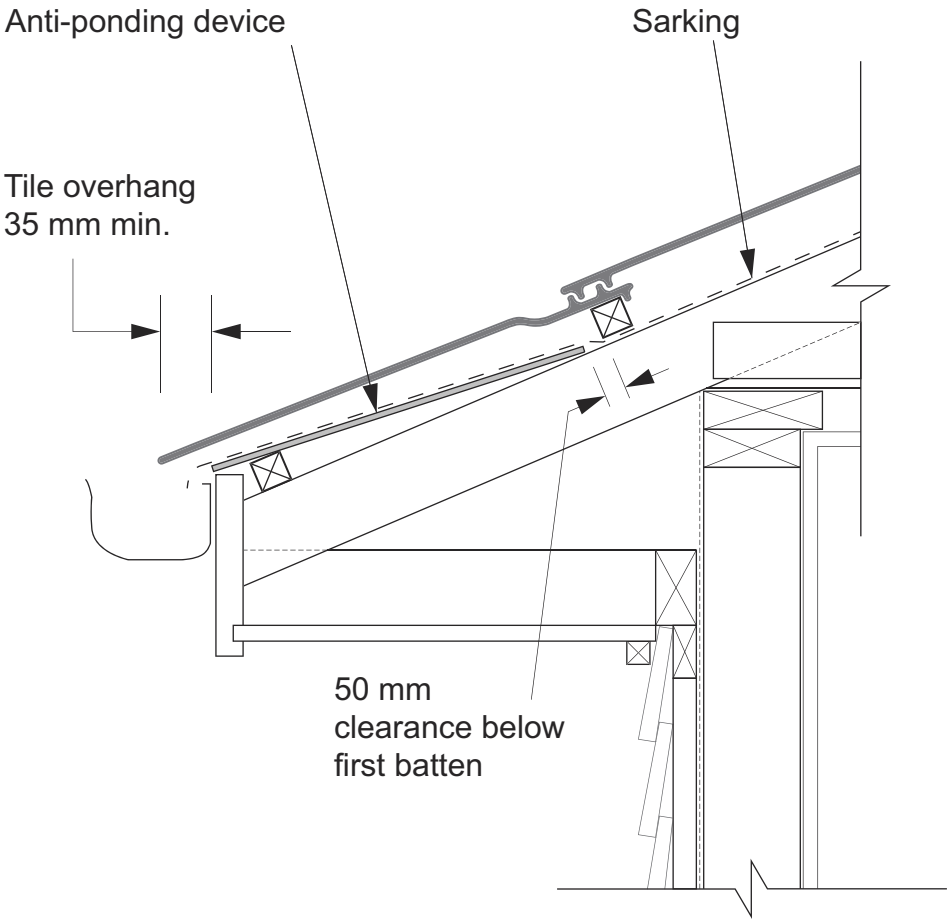

Figure Notes

(1) Sarking is *required* by 7.3.4.

(2) Anti-ponding device is *required* by 7.3.5.

7.3.6 Water discharge

[2019: 3.2.5.6]

Where an eaves gutter is provided in accordance with H2D6(1), tiles must overhang the fascia or tiling batten by not less than 35 mm (See Figure 7.3.5).

Part 7.4 Gutters and downpipes

7.4.1 Application

[New for 2022]

(1) Part 7.4 applies subject to H2D6(2) and the limitations set out in H2D6(3).

(2) Part 7.4 need not be complied with if H2D6(1)(a) is complied with.

Explanatory Information

- The requirement to install drainage systems from roofs and sub-soil drains should be confirmed with the *appropriate authority*. These provisions need only be applied when drainage systems are necessary.
- Information on drainage requirements outside the allotment can be obtained from the *appropriate authority*.
- Where box gutters are proposed to be installed, AS/NZS 3500.3 may be used to calculate minimum sizes, falls and overflow requirements.
- For Class 10 buildings, it may not be necessary to comply with the requirements for removing *surface water* where the Class 10 building is not connected to or does not impact a Class 1 building. For example, where a Class 10 garage is attached to a Class 1 dwelling, the run-off from the garage would most likely directly impact the dwelling and therefore be *required* to be removed. However, a garage that is separated by a reasonable distance from the dwelling so as to not have an impact would not necessarily have to comply with the requirements for removal of surface water.
- The following are a number of other Clauses and Parts of the ABCB Housing Provisions that contain requirements related to drainage and roofing in addition to the provisions of this Part:
  - 7.5.8 for parapet cappings.
  - 7.3.6 for water discharge.
  - 7.2.7 for *flashings* and cappings as they relate to penetrations through roofs.
  - Part 3.3 for *drainage*.

Explanatory Information: Design of stormwater drainage systems

Stormwater drainage systems specified in the NCC Volume Two and the ABCB Housing Provisions are not designed to remove all water to an appropriate outfall during exceptionally heavy rain, particularly in tropical areas. Specifically, eaves gutter systems are designed to remove water arising from rainfall events with an *annual exceedance probability* of 5% provided they are not blocked.

Accordingly, it is necessary to design and install the system to incorporate overflow measures so that when overflowing occurs, during a rainfall event with an *annual exceedance probability* of up to 1%, any water is directed away in a manner which ensures it does not pond against, enter or damage the building, even if the stormwater drainage system is blocked.

Insufficient and poorly located downpipes are a frequent cause of poor roof drainage system performance. The installation of downpipes, especially near valley gutters, is designed to ensure rainwater from areas on the roof that have concentrated water flows is adequately removed.

Particular consideration needs to be given to box gutters, valley gutters etc. located above the internal areas of a building. There are several options available to designers using the requirements of NCC Volume Two and the ABCB Housing Provisions. The designer will need to choose an overflow system that will cope with the rainfall intensity for the particular location. Consideration needs to be given to the total capacity of overflow measures on lower level roofs where overflow measures adopted for a higher roof catchment will result in overflow to a lower one. Overflow discharge onto lower roofs may also require consideration of sarking, flashing and other weatherproofing precautions to the lower roof area.

The acceptable overflow measures in Table 7.4.4a and Table 7.4.4b were calculated using the following formulas:

- For continuous slots or rainhead:

$$Q = C_d A \sqrt{2gh}$$

where—

A = Area (m^2)

C_d = Discharge coefficient = 0.61

g = Gravity = 9.81 m/s^2

h = Effective head (m)

Q = Flow rate (m^3/s)

- For front face weir, end stop weir, inverted nozzle, front bead or controlled gap:

$$Q = 0.67 C_d b \sqrt{2g}\, h^{1.5}$$

where—

b = Width (m)

C_d = Discharge coefficient = 0.63

g = Gravity = 9.81 m/s^2

h = Effective head (m)

Q = Flow rate (m^3/s)

7.4.2 Materials

[2019: 3.5.3.2]

Gutters, downpipes and *flashings* must—

(a) be manufactured in accordance with AS/NZS 2179.1 for metal components; and

(b) be manufactured in accordance with AS 1273 for UPVC components; and

(c) be compatible with all upstream roofing materials in accordance with 7.2.2(2); and

(d) not contain any lead if used on a roof forming part of a *drinking water* catchment area.

7.4.3 Selection of guttering

[2019: 3.5.3.3]

The size of guttering must—

(a) for eaves gutters, be in accordance with Table 7.4.3a, Table 7.4.3b and Table 7.4.3c; and

(b) be suitable to remove rainwater falling at the appropriate 5 minute duration rainfall intensity listed in Table 7.4.3d as follows—

(i) for eaves gutters — 5% *annual exceedance probability*; and

(ii) for eaves gutter overflow measures — 1% *annual exceedance probability*.

Table 7.4.3a: Size of gutter required to drain roof catchment area into one (1) downpipe for various rainfall intensities and roof catchment areas (A, B, C, D, E and F defined in Table 7.4.3b)

Design rainfall intensity (mm/h) (as per Table 7.4.3d)	Roof catchment area per downpipe — 30 m^2	Roof catchment area per downpipe — 40 m^2	Roof catchment area per downpipe — 50 m^2	Roof catchment area per downpipe — 60 m^2	Roof catchment area per downpipe — 70 m^2
90 mm/h	A or C	A or C	A or C	A or C	A or C

Design rainfall intensity (mm/h) (as per Table 7.4.3d)	Roof catchment area per downpipe — 30 m^2	Roof catchment area per downpipe — 40 m^2	Roof catchment area per downpipe — 50 m^2	Roof catchment area per downpipe — 60 m^2	Roof catchment area per downpipe — 70 m^2
120 mm/h	A or C	A or C	A or C	A or C	A or D
140 mm/h	A or C	A or C	A or C	A or D	B or E
160 mm/h	A or C	A or C	A or C	A or E	B or E
175 mm/h	A or C	A or C	A or D	B or E	E
200 mm/h	A or C	A or C	A or D	B or E	F
225 mm/h	A or C	A or C	A or B	E	F
255 mm/h	A or C	A or D	B or E	E	F
275 mm/h	A or C	A or D	B or E	F	F
325 mm/h	A or C	B or E	F	F	F
425 mm/h	A or C	E	F	F	F

Table 7.4.3b: Gutter sizes for various rainfall intensities

Gutter type	Gutter description	Minimum cross-sectional area (mm^2)
A	Medium rectangular gutter	6500
B	Large rectangular gutter	7900
C	115 mm D gutter	5200
D	125 mm D gutter	6300
E	150 mm D gutter	9000
F	Gutter must be designed in accordance with AS/NZS 3500.3	N/A

Table 7.4.3c: Downpipe selection for gutter types (A, B, C, D, E and F defined in Table 7.4.3b)

Downpipe section	Gutter type A	Gutter type B	Gutter type C	Gutter type D	Gutter type E
75 mm dia.	Yes	Yes	Yes	Yes	No
100 mm x 50 mm	Yes	Yes	Yes	Yes	Yes
90 mm dia.	Yes	Yes	Yes	Yes	Yes
100 mm x 75 mm	Yes	Yes	Yes	Yes	Yes

Table Notes

(1) Yes — downpipe is suitable for the eaves gutter selection.

(2) No — downpipe is not suitable for the eaves gutter selection.

Table 7.4.3d: 5 minute duration rainfall intensities

State	Locality	*Annual exceedance probability*, 5% (mm/h)	*Annual exceedance probability*, 1% (mm/h)
ACT	Canberra	143	192
ACT	Gungahlin	137	179
ACT	Tuggeranong	148	210
NSW	Albury	139	180
NSW	Broken Hill	142	217
NSW	Goulburn	120	154
NSW	Kiama	225	320

State	Locality	*Annual exceedance probability*, 5% (mm/h)	*Annual exceedance probability*, 1% (mm/h)
NSW	Newcastle	225	316
NSW	Orange	141	186
NSW	Sydney	201	262
NSW	Avalon, Sydney	210	287
NSW	Campbelltown, Sydney	166	223
NSW	Penrith, Sydney	178	240
NSW	Windsor, Sydney	175	234
NSW	Tweed Heads	252	332
NSW	Wollongong	218	311
NT	Alice Springs	165	239
NT	Darwin	233	274
NT	Katherine	216	250
QLD	Bamaga	252	298
QLD	Brisbane	236	306
QLD	Ipswich, Brisbane	211	278
QLD	Victoria Point, Brisbane	245	320
QLD	Bundaberg	266	339
QLD	Cairns	230	279
QLD	Cloncurry	219	278
QLD	Innisfail	248	302
QLD	Mackay	250	315
QLD	Mt Isa	201	262
QLD	Noosa Heads	258	332
QLD	Rockhampton	229	300
QLD	Toowoomba	203	268
QLD	Townsville	235	300
QLD	Weipa	238	281
SA	Adelaide	120	174
SA	Gawler, Adelaide	111	158
SA	Mt Gambier	103	144
SA	Murray Bridge	120	177
SA	Port Augusta	133	199
SA	Port Pirie	123	183
SA	Yorketown	155	166
TAS	Burnie	128	178
TAS	Flinders Island	124	167
TAS	Hobart	86	120
TAS	Launceston	91	123
TAS	Queenstown	94	120
TAS	St. Marys	150	207
VIC	Ballarat	134	192
VIC	Benalla	146	194
VIC	Geelong	103	143

State	Locality	*Annual exceedance probability*, 5% (mm/h)	*Annual exceedance probability*, 1% (mm/h)
VIC	Horsham	121	173
VIC	Lakes Entrance	145	199
VIC	Melbourne	132	187
VIC	Hastings, Melbourne	112	145
VIC	Sorrento, Melbourne	106	140
VIC	Mildura	142	219
VIC	Stawell	130	187
WA	Albany	127	179
WA	Broome	232	287
WA	Bunbury	147	198
WA	Derby	211	256
WA	Geraldton	138	194
WA	Kalgoorlie	136	204
WA	Perth	129	172
WA	Joondalup, Perth	133	180
WA	Midland, Perth	122	164
WA	Port Hedland	168	232
WA	Tom Price	138	182

Table Notes

Locations used in this table are based on the nearest Bureau of Meteorology grid cell latitude and longitude to the central Post Office of each city or town.

Explanatory Information

The cross sectional area referred to in Table 7.4.3b is measured up to the lowest part of the relevant overflow facility including the lower edge of a slot, gutter back, end-stop weir, inverted nozzle, front-face weir or overflow opening in a rainhead.

Explanatory Information: Worked example — determining appropriate overflow measures

The location of a proposed building is in Wollongong, NSW. Using Table 7.4.3d the 5 minute duration rainfall intensity for a 1% *annual exceedance probability* is 311 mm/h. The 5 minute duration rainfall intensities in Table 7.4.4a and Table 7.4.4b are provided in 25 mm/h increments, therefore for the purpose of the worked example 325 mm/h will be used.

Table 7.4.4a and Table 7.4.4b provide *required* overflow volumes in both litres per second for dedicated overflow measures and litres per second per metre for continuous overflow measures. Extrapolation of the values in these tables can be used to inform a *Performance Solution* complying with the Governing Requirements of the NCC. Where both dedicated and continuous measures are proposed, Table 7.4.4b can be used to determine the *required* overflow volume.

(1) Multiple overflow measures are proposed to be used with a roof catchment area of 60 m^2, incorporating a 10 m eaves gutter.

(2) Using Table 7.4.4b for a 325 mm/h 5 minute duration rainfall intensity, the overflow volume in litres per second (L/s) for a roof catchment area of 60 m^2 is 5.4 L/s.

(3) Select an acceptable dedicated overflow measure from 7.4.7.

(a) The selected dedicated overflow measure is an end-stop weir which provides 0.5 L/s.

(b) One end-stop weir does not achieve the *required* overflow volume of 5.4 L/s, and additional overflow measures are *required* to remove the overflow volume.

(4) To achieve the *required* overflow volume a continuous overflow measure is also selected from 7.4.6.

(a) A front face slotted gutter is the selected overflow measure as it provides 0.5 L/s/m.

(b) Taking account of the eaves gutter length (10 m), the combined overflow measures (0.5 L/s for the end-stop weir and 0.5 L/s/m × 10 m) will remove up to 5.5 L/s.

(5) The 5.5 L/s capacity provided by the selected overflow measures exceeds the *required* 5.4 L/s overflow volume.

7.4.4 Installation of gutters

[2019: 3.5.3.4]

(1) Eaves gutters must be—

(a) installed with a fall of not less than 1:500; and

(b) supported by brackets securely fixed at stop ends, corners and at not more than 1.2 m centres; and

(c) fitted with overflow measures capable of removing the overflow volume specified in Table 7.4.4a and Table 7.4.4b.

(2) Overflow measures in accordance with 7.4.6 and 7.4.7 are deemed to be capable of removing the overflow volume specified in those provisions.

(3) Where the overflow volume values for ridge-to-gutter lengths in Table 7.4.4a and roof catchment areas in Table 7.4.4b are not stated, interpolation may be used to determine the applicable overflow values.

(4) Valley gutters must—

(a) be installed on a roof with a pitch more than 12.5 degrees; and

(b) have dimensions in accordance with Table 7.4.4c for the relevant rainfall intensity; and

(c) have minimum freeboard of not less than 15 mm; and

(d) have a side angle of not less than 12.5 degrees.

(5) The requirement of (1)(c) does not apply to eaves gutters fixed to a verandah or an eave that is greater than 450 mm in width, which—

(a) has no lining; or

(b) is a raked verandah or a raked eave with a lining sloping away from the building.

Table 7.4.4a: Overflow volume for continuous measure (L/s/m)

Design 5 minute duration rainfall intensity (mm/h) (from Table 7.4.3d)	Ridge to gutter length — 2 m	Ridge to gutter length — 4 m	Ridge to gutter length — 6 m	Ridge to gutter length — 8 m	Ridge to gutter length — 10 m	Ridge to gutter length — 12 m	Ridge to gutter length — 14 m	Ridge to gutter length — 16 m
150 mm/h	0.08 L/s/m	0.17 L/s/m	0.25 L/s/m	0.33 L/s/m	0.42 L/s/m	0.50 L/s/m	0.58 L/s/m	0.67 L/s/m
175 mm/h	0.10 L/s/m	0.19 L/s/m	0.29 L/s/m	0.39 L/s/m	0.49 L/s/m	0.58 L/s/m	0.68 L/s/m	0.78 L/s/m
200 mm/h	0.11 L/s/m	0.22 L/s/m	0.33 L/s/m	0.44 L/s/m	0.56 L/s/m	0.67 L/s/m	0.78 L/s/m	0.89 L/s/m
225 mm/h	0.13 L/s/m	0.25 L/s/m	0.38 L/s/m	0.50 L/s/m	0.63 L/s/m	0.75 L/s/m	0.88 L/s/m	1.0 L/s/m
250 mm/h	0.14 L/s/m	0.28 L/s/m	0.42 L/s/m	0.56 L/s/m	0.69 L/s/m	0.83 L/s/m	0.97 L/s/m	1.1 L/s/m
275 mm/h	0.15 L/s/m	0.31 L/s/m	0.46 L/s/m	0.61 L/s/m	0.76 L/s/m	0.92 L/s/m	1.1 L/s/m	1.2 L/s/m
300 mm/h	0.17 L/s/m	0.33 L/s/m	0.50 L/s/m	0.67 L/s/m	0.83 L/s/m	1.0 L/s/m	1.2 L/s/m	1.3 L/s/m
325 mm/h	0.18 L/s/m	0.36 L/s/m	0.54 L/s/m	0.72 L/s/m	0.90 L/s/m	1.1 L/s/m	1.3 L/s/m	1.4 L/s/m
350 mm/h	0.19 L/s/m	0.39 L/s/m	0.58 L/s/m	0.78 L/s/m	0.97 L/s/m	1.2 L/s/m	1.4 L/s/m	1.6 L/s/m
375 mm/h	0.21 L/s/m	0.42 L/s/m	0.63 L/s/m	0.83 L/s/m	1.0 L/s/m	1.3 L/s/m	1.5 L/s/m	1.7 L/s/m
400 mm/h	0.22 L/s/m	0.44 L/s/m	0.67 L/s/m	0.89 L/s/m	1.1 L/s/m	1.3 L/s/m	1.6 L/s/m	1.8 L/s/m

Table 7.4.4b: Overflow volume for dedicated measure (L/s)

Design 5 minute duration rainfall intensity (mm/h) (from Table 7.4.3d)	Roof catchment area — 30 m^2	Roof catchment area — 40 m^2	Roof catchment area — 50 m^2	Roof catchment area — 60 m^2	Roof catchment area — 70 m^2
150 mm/h	1.3 L/s	1.7 L/s	2.1 L/s	2.5 L/s	2.9 L/s
175 mm/h	1.5 L/s	1.9 L/s	2.4 L/s	2.9 L/s	3.4 L/s
200 mm/h	1.7 L/s	2.2 L/s	2.8 L/s	3.3 L/s	3.9 L/s
225 mm/h	1.9 L/s	2.5 L/s	3.1 L/s	3.8 L/s	4.4 L/s
250 mm/h	2.1 L/s	2.8 L/s	3.5 L/s	4.2 L/s	4.9 L/s
275 mm/h	2.3 L/s	3.1 L/s	3.8 L/s	4.6 L/s	5.3 L/s
300 mm/h	2.5 L/s	3.3 L/s	4.2 L/s	5.0 L/s	5.8 L/s
325 mm/h	2.7 L/s	3.6 L/s	4.5 L/s	5.4 L/s	6.3 L/s
350 mm/h	2.9 L/s	3.9 L/s	4.9 L/s	5.8 L/s	6.8 L/s
365 mm/h	3.1 L/s	4.2 L/s	5.2 L/s	6.3 L/s	7.3 L/s
400 mm/h	3.3 L/s	4.4 L/s	5.6 L/s	6.7 L/s	7.8 L/s

Table 7.4.4c: Valley gutters — Dimensions

Design rainfall intensity mm/h	Sheet width (minimum, mm)	Effective depth (h_e), (minimum, mm)	Effective width (w_e), (minimum, mm)
≤200	355	32	215
>200 to ≤ 250	375	35	234
>250 to ≤300	395	38	254
>300 to ≤350	415	40	273
>350 to ≤400	435	43	292

Explanatory Information: Valley gutters

- Where roofs have pitches less than 12.5 degrees valley gutters may be designed as box gutters in accordance with AS/NZS 3500.3 or as a *Performance Solution* by a professional engineer or other *appropriately qualified person*.
- An example of a valley gutter profile is shown in Explanatory Figure 7.4.4.

Figure 7.4.4 (explanatory): Valley gutter profile

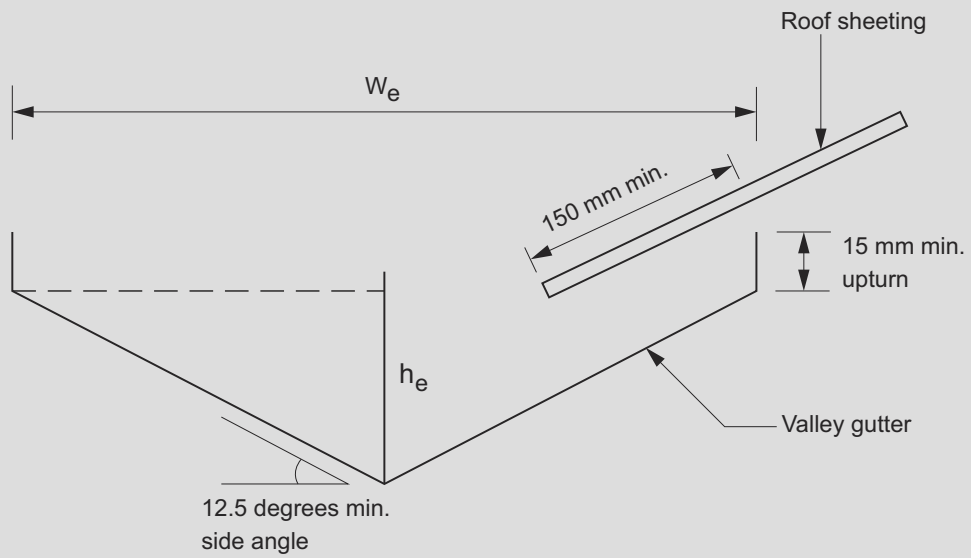

7.4.5 Downpipes – size and installation

[2019: 3.5.3.5]

Downpipes must—

(a) not serve more than 12 m of gutter length for each downpipe; and

(b) be located as close as possible to valley gutters; and

(c) be selected in accordance with the appropriate eaves gutter section as shown in Table 7.4.3a, Table 7.4.3b and Table 7.4.3c.

Explanatory Information

A maximum 12 m gutter length served by each downpipe is to ensure effective fall and adequate capacity to discharge all water anticipated during a storm having an *annual exceedance probability* of 5%.

Where a rainhead overflow device is incorporated in the top of the downpipe, its overflow discharge should be directed away from the building.

7.4.6 Acceptable continuous overflow measure

[2019: Table 3.5.3.4a]

(1) For a front face slotted gutter with—

(a) a minimum slot opening area of 1200 mm^2 per metre of gutter; and

(b) the lower edge of the slots installed a minimum of 25 mm below the top of the fascia,

the acceptable overflow capacity must be 0.5 L/s/m, constructed in accordance with Figure 7.4.6a.

(2) For a controlled back gap with—

(a) a permanent minimum 10 mm spacer installed between the gutter back and the fascia; and

(b) one spacer per bracket, with the spacer not more than 50 mm wide; and

(c) the back of the gutter installed a minimum of 10 mm below the top of the fascia,

the acceptable overflow capacity must be 1.5 L/s/m, constructed in accordance with Figure 7.4.6b.

(3) For the controlled back gap option, the spacer can be a proprietary clip or bracket that provides the *required* offset of the gutter from the fascia.

(4) For controlled front bead height with the front bead of the gutter installed a minimum of 10 mm below the top of the fascia, the acceptable overflow capacity is 1.5 L/s/m constructed in accordance with Figure 7.4.6c.

Figure 7.4.6a: Construction of front face slotted gutter

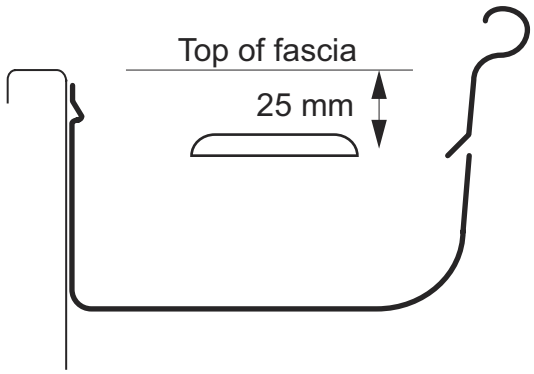

Figure 7.4.6b: Construction of controlled back gap

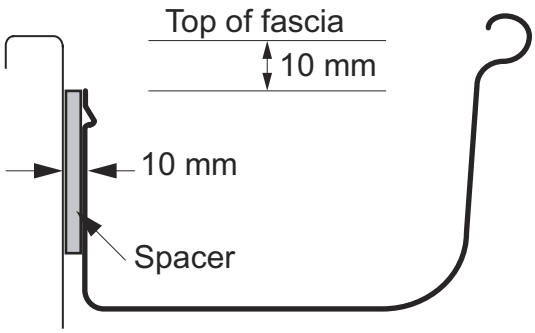

Figure 7.4.6c: Construction of controlled front bead height

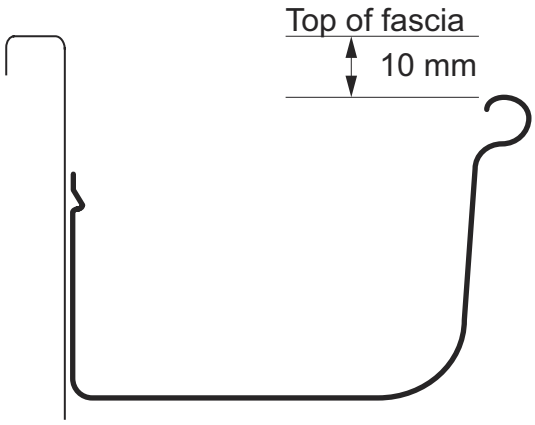

Figure Notes

Front bead of gutter to be a minimum of 10 mm below the top of the fascia.

7.4.7 Acceptable dedicated overflow measure per downpipe

[2019: Table 3.5.3.4b]

(1) For an end-stop weir with—

(a) a minimum clear width of 100 mm; and

(b) the weir edge installed a minimum 25 mm below the top of the fascia,

the acceptable overflow is 0.5 L/s constructed in accordance with Figure 7.4.7a.

(2) An end-stop weir is not suitable where the end-stop abuts a wall.

(3) For an inverted nozzle installed within 500 mm of a gutter high point with—

(a) a minimum nozzle size of 100 mm × 50 mm positioned lengthways in the gutter; and

(b) the top of the nozzle installed a minimum of 25 mm below the top of the fascia,

the acceptable overflow is 1.2 L/s constructed in accordance with Figure 7.4.7b.

(4) For a front face weir with—

(a) a minimum clear width of 200 mm; and

(b) a minimum clear height of 20 mm; and

(c) the weir edge installed a minimum of 25 mm below the top of the fascia,

the acceptable overflow capacity is 1.0 L/s constructed in accordance with Figure 7.4.7c.

(5) For a rainhead with—

(a) a 75 mm diameter hole in the outward face of the rainhead; and

(b) the centreline of the hole positioned 100 mm below the top of the fascia,

the acceptable overflow capacity is 3.5 L/s constructed in accordance with Figure 7.4.7d.

(6) The rainhead should be detailed to avoid nuisance discharge from the overflow at rainfall intensities below the normal design level.

Figure 7.4.7a: Construction of end-stop weir

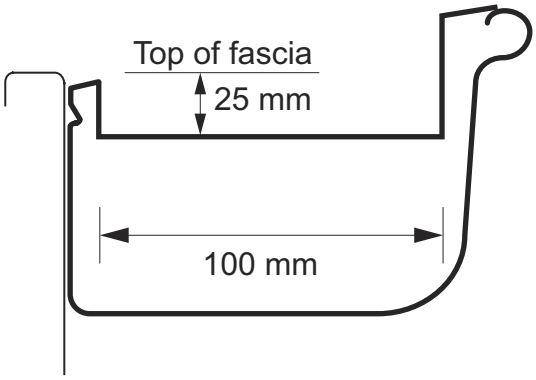

Figure 7.4.7b: Construction of inverted nozzle

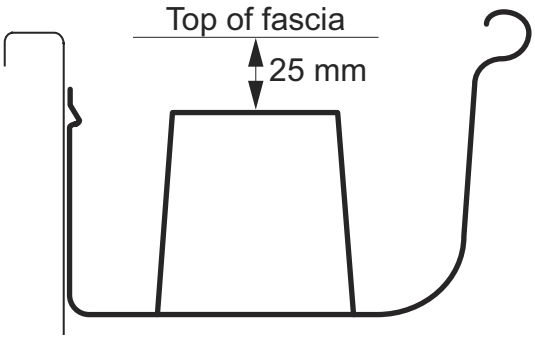

Figure 7.4.7c: Construction of front face weir

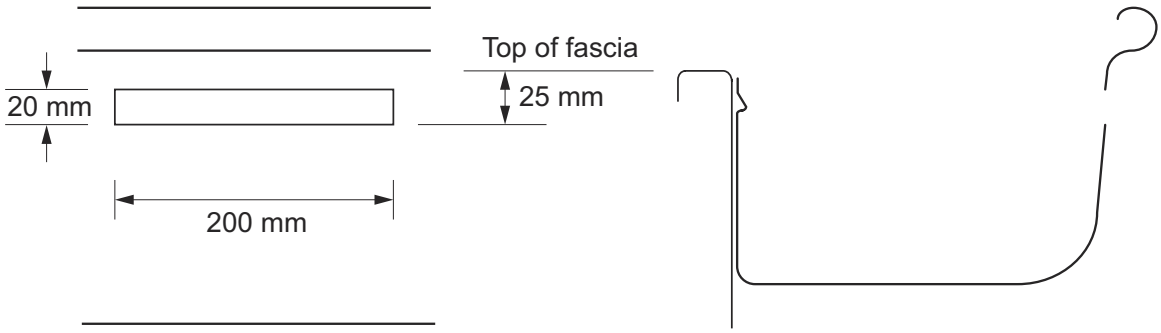

Figure 7.4.7d: Construction of rainhead

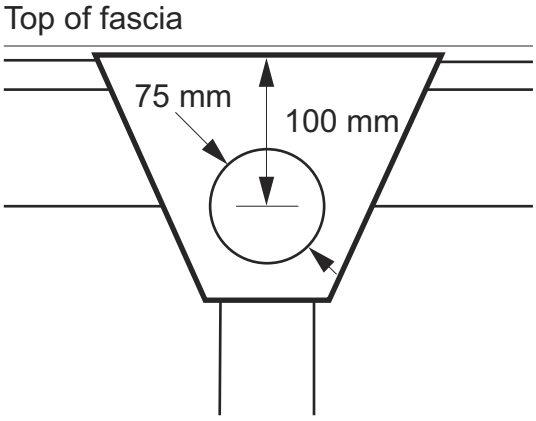

Part 7.5 Timber and composite wall cladding

7.5.1 Application

[2019: 3.5.4.1]

(1) Compliance with Part 7.5 for wall cladding is achieved if—

(a) it is installed in accordance with—

(i) 7.5.2 for timber cladding, including weatherboards and profiled boards; and

(ii) 7.5.3 for fibre-cement and hardboard wall cladding boards; and

(iii) 7.5.4 for fibre-cement, hardboard and plywood sheet wall cladding; and

(b) fibre-cement sheet eaves where provided, are installed in accordance with 7.5.5; and

(c) openings and penetrations in cladding are flashed in accordance with 7.5.6; and

(d) the bottom surface of the cladding terminates in accordance with 7.5.7; and

(e) parapets, where provided, are capped in accordance with 7.5.8.

(2) Part 7.5 need not be complied with if H1D7(5) is complied with.

Explanatory Information: Masonry wall cladding

Masonry wall cladding, including masonry veneer, is not covered by this Part but is covered by NCC Volume Two H1D5 and Section 5 of the ABCB Housing Provisions.

Explanatory Information: Alternative wall cladding materials and systems

The provisions of this Part and those of NCC Volume Two H1D5 and Section 5 (Masonry) of the ABCB Housing Provisions do not cover all of the wall cladding materials that may be used for a Class 1 or Class 10 building.

Wall cladding materials and systems not covered by the *Deemed-to-Satisfy Provisions* may be considered under a *Performance Solution* that complies with the relevant *Performance Requirements*.

One of the *Assessment Methods* that may be used to demonstrate compliance with the *Performance Requirements* is the use of documentary evidence in accordance with Part A5.

7.5.2 Timber wall cladding

[2019: 3.5.4.2]

(1) Timber wall cladding must be installed in accordance with (2), (3), (4) and (5).

(2) Splayed timber weatherboards must be fixed in accordance with Figure 7.5.2a and Figure 7.5.2b and with a lap not less than—

(a) 30 mm for hardwood, Cypress and treated pine; and

(b) 20 mm for Western Red Cedar; and

(c) 25 mm for Baltic Pine.

(3) Profiled timber boards must be—

(a) fixed in a horizontal, vertical or diagonal direction with the overlap and groove closely fitted, where provided; and

(b) with tongue and groove profile, fixed with tongue edge up, where they are fixed in a horizontal or diagonal direction; and

(c) where fixed in a vertical or diagonal direction, provided with a vapour permeable sarking complying with AS 4200.1 (see Figure 7.5.2c) installed behind boards with—

(i) each adjoining sheet or roll being—

(A) overlapped not less than 150 mm; or

(B) taped together; and

(i) sarking fixed to supporting members at not more than 300 mm centres.

(4) Splayed and profiled timber weatherboards must be fixed in accordance with Table 7.5.2, with—

(a) one fixing at each stud or equivalent framing member for splayed timber weatherboards; and

(b) one fixing provided at each stud or equivalent framing member for profiled timber boards not more than 130 mm wide; and

(c) two fixings provided at each stud or equivalent framing member for profiled timber board more than 130 mm wide; and

(d) fixings located so that the fixing does not penetrate the tip or thinner edge of the board beneath.

(5) Fixings used for timber cladding must comply with the following:

(a) Where fixings are punched or countersunk and filled prior to painting, fixings must be standard steel flat head nails or standard steel self embedding head screws.

(b) Uncoated copper or steel fixings must not be used for Western Red Cedar (silicon bronze, monel metal, stainless steel or hot-dipped galvanised are suitable).

(c) Where the building is located within 200 m of *breaking surf*, fixings must be—

(i) stainless steel when fixed into timber framing members; or

(ii) hot-dipped galvanized (min 600 g/m^2) when fixed into steel framing members.

(d) In all other cases, fixings must be hot-dipped galvanised (min. 600 g/m^2) flat head nails or hot dipped galvanised (min 600 g/m^2) self embedding head or wafer head screws.

Table 7.5.2: Fixing requirements—Splayed and profiled timber weatherboards

Wind class	Maximum stud spacing (mm)	Minimum nominal stud fixings
N1 - N3	600	Timber: 2.8 G or (8-18) S
		Steel: (8-18) S

Table Notes

(1) G = galvanised plain shank, threaded or equivalent nails.

(2) S = self embedding head or wafer head screw.

(3) Fasteners must penetrate not less than 30 mm into timber frames and not less than two full screw threads through steel frames.

(4) Wall cladding may be fixed through timber or metal battens attached to the wall frame in accordance with AS 1684.2, AS 1684.3, AS 1684.4 or NASH standard as appropriate (see fixing requirements for roof battens) so long as the minimum penetration into the wall frame is achieved.

(5) Steel framing members must have a base metal thickness (BMT) not less than that *required* for a roof batten in NASH standard.

Figure 7.5.2a: Fixing of wall cladding — Timber cladding

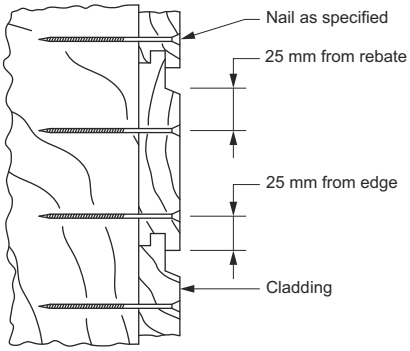

Shiplap weather board

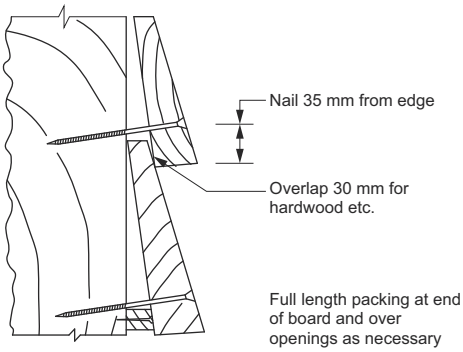

Splayed weather board

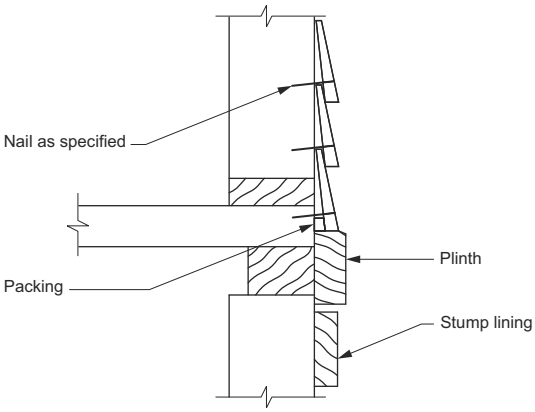

Section at lower part of weatherboard building

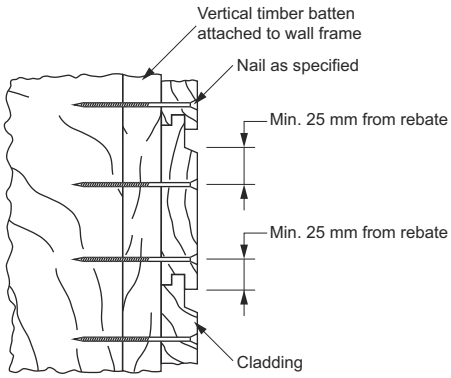

Shiplap weather board fixed through batten

Figure 7.5.2b: Fixing of wall cladding — Wall cladding boards

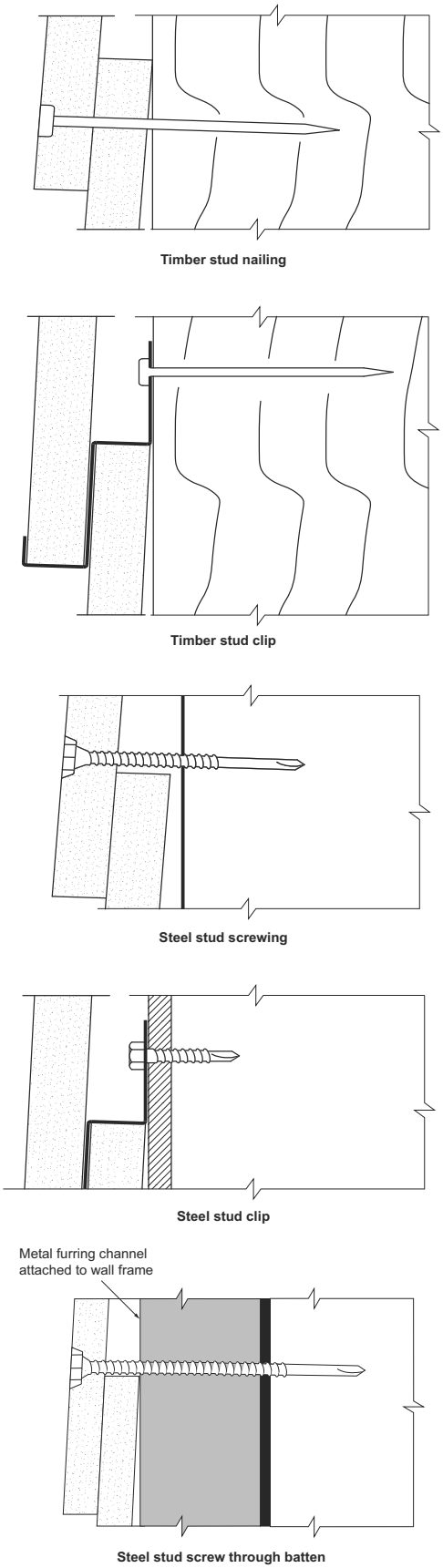

Figure 7.5.2c: Fixing of vertical wall cladding

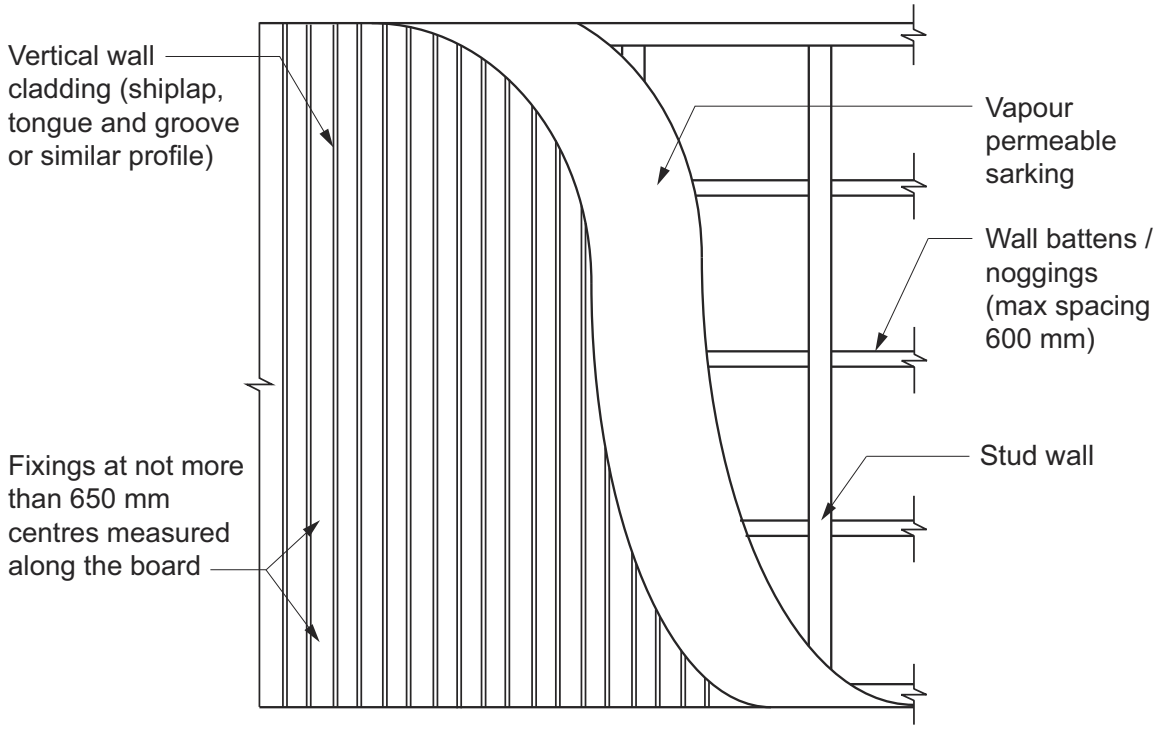

Explanatory Information: Fixing of wall cladding

7.5.2(4)(d) ensures the fixing of the wall cladding does not split the wall cladding board below. For example, for a 30 mm lap, fix 35 mm from the butt or 5 mm above the corresponding overlapping board (see Figure 7.5.2a).

Explanatory Information: Timber cladding profiles

7.5.2 covers the following types of timber cladding profiles:

- Horizontal bevel-back.
- Horizontal rebated bevel-back.
- Horizontal rusticated.
- Vertical and horizontal shiplap.
- Tongue and groove.

Explanatory Information: Machine and hand driven nails

Table 7.5.2 applies to both machine and hand driven nails.

7.5.3 Wall cladding boards

[2019: 3.5.4.3]

Wall cladding boards must—

(a) for 7.5 mm (minimum) thick fibre-cement — comply with AS/NZS 2908.2 or ISO 8336; and

(b) for 9.5 mm (minimum) thick hardboard — comply with AS/NZS 1859.4 for exterior grade; and

(c) be fixed in accordance with Table 7.5.3a and Table 7.5.3b with—

(i) one fixing provided at each stud or equivalent framing member for wall cladding boards not more than 130 mm wide; and

(ii) two fixings provided at each stud or equivalent framing member for wall cladding boards greater than 130 mm wide; and

(iii) fixings located along the studs at not more than 100 mm centres; and

(iv) fixings located so that they do not penetrate the tip or thinner edge of the board beneath; and

(d) have a lap not less than—

(i) for 7.5 mm (minimum) thick fibre-cement — 25mm; or

(ii) for 9.5 mm (minimum) thick hardboard — 20 mm.

Table 7.5.3a: Fixing requirements—Minimum 7.5 mm thick fibre-cement wall cladding boards

Wind class	Maximum stud spacing (mm)	Minimum nominal stud fixings
N1 - N3	600	Timber: 2.8 GC
		Steel: (8-18) S

Table Notes

(1) GC = galvanised fibre-cement nail.

(2) S = self embedding or wafer head screw.

(3) Fasteners must penetrate not less than 30 mm into timber frames and not less than two full screw threads through steel frames.

(4) Steel framing members must have a base metal thickness (BMT) not less than that *required* for a roof batten in NASH standard.

(5) Wall cladding may be fixed through timber or metal battens attached to the wall frame in accordance with AS 1684.2, AS 1684.3, AS 1684.4 or NASH standard as appropriate (see fixing requirements for roof battens) so long as the minimum penetration into the wall frame is achieved.

Table 7.5.3b: Fixing requirements—Minimum 9.5 mm thick hardboard wall cladding boards

Wind class	Maximum stud spacing (mm)	Minimum nominal stud fixings
N1 - N3	600	Timber: 2.8 GC
		Steel: (8-18) S

Table Notes

(1) GC = galvanised fibre-cement nail.

(2) S = self embedding or wafer head screw.

(3) Fasteners must penetrate not less than 30 mm into timber frames and not less than two full screw threads through steel frames.

(4) Steel framing members must have a base metal thickness (BMT) not less than that *required* for a roof batten in NASH standard.

(5) Wall cladding may be fixed through timber or metal battens attached to the wall frame in accordance with AS 1684.2, AS 1684.3, AS 1684.4 or NASH standard as appropriate (see fixing requirements for roof battens) so long as the minimum penetration into the wall frame is achieved.

Explanatory Information

Where the wall cladding boards contain a shiplap join as opposed to a lapped join, 7.5.3(d) does not apply, and the joins between the boards are *required* to have the overlap and groove closely fitted.

7.5.4 Sheet wall cladding

[2019: 3.5.4.4]

(1) Fibre-cement sheet wall cladding must—

(a) comply with AS/NZS 2908.2 or ISO 8336; and

(b) be fixed in accordance with Table 7.5.4a.

(2) Hardboard sheet wall cladding must—

(a) comply with AS/NZS 1859.4 for exterior grade; and

(b) be fixed in accordance with Table 7.5.4b.

(3) Structural plywood wall cladding must—

(a) comply with AS/NZS 2269.0; and

(b) be fixed in accordance with Table 7.5.4c.

Table 7.5.4a: Stud and fixing spacings for 6 mm fibre-cement sheet wall cladding

Wind class	Maximum stud spacing (mm)	Maximum nail spacing within 1.2 m of the external corners of the building (mm) Note 1	Maximum nail spacing elsewhere (mm) Note 1
N1	≤ 1.2 m of external building corners: 600 Elsewhere: 600	Body: 300, Edges: 200	Body: 300, Edges: 200
N2	≤ 1.2 m of external building corners: 600 Elsewhere: 600	Body: 200, Edges: 200	Body: 300, Edges: 200
N3	≤ 1.2 m of external building corners: 450 Elsewhere: 600	Body: 200, Edges: 200	Body: 200, Edges: 200

Table Notes

(1) Maximum nail spacing using 2.8 mm fibre-cement nails.

(2) Fixings must be located not less than 50 mm from the edge of all corners.

(3) Fasteners must penetrate not less than 30 mm into a timber frame.

(4) Wall cladding may be fixed through timber or metal battens attached to the wall frame in accordance with AS 1684.2, AS 1684.3, AS 1684.4 or NASH standard as appropriate (see fixing requirements for roof battens) so long as the minimum penetration into the wall frame is achieved.

Table 7.5.4b: Stud and fixing spacings for 9.5 mm thick hardboard sheet wall cladding

Wind class	Maximum stud spacing (mm)	Maximum nail spacing within 1.2 m of the external corners of the building (mm) Note 1	Maximum nail spacing elsewhere (mm) Note 1
N1	600	Body: 300, Edges: 150	Body: 300, Edges: 150
N2	600	Body: 300, Edges: 150	Body: 300, Edges: 150
N3	600	Body: 300, Edges: 150	Body: 300, Edges: 150

Table Notes

(1) Maximum nail spacing using 2.8 mm galvanised clouts or flat head nails.

(2) Fixings must be positioned a minimum of 12 mm from the edge of the sheet and not less than 50 mm from the edge of all corners.

(3) Fasteners must penetrate not less than 30 mm into the timber frame.

(4) Wall cladding may be fixed through timber or metal battens attached to the wall frame in accordance with AS 1684.2, AS 1684.3, AS 1684.4 or NASH standard as appropriate (see fixing requirements for roof battens) so long as the minimum penetration into the wall frame is achieved.

Table 7.5.4c: Stud and fixing spacings for plywood wall cladding equal to or greater than 6.5 mm thick

Wind class	Maximum stud spacing (mm)	Maximum nail spacing within 1.2 m of the external corners of the building (mm) Note 1	Maximum nail spacing elsewhere (mm) Note 1
N1	600	Body: 200, Edges: 100	Body: 200, Edges: 150
N2	600	Body: 200, Edges: 100	Body: 200, Edges: 150
N3	600	Body: 150, Edges: 100	Body: 200, Edges: 150

Table Notes

(1) Maximum nail spacing using 2.8 mm or 3.5 mm galvanised clouts or flat head nails.

(2) Fixings must be positioned a minimum of 12 mm from the edge of the sheet and not less than 50 mm from the edge of all corners.

(3) Fasteners must penetrate not less than 30 mm into the timber frame

(4) Wall cladding may be fixed through timber or metal battens attached to the wall frame in accordance with AS 1684.2, AS 1684.3, AS 1684.4 or NASH standard as appropriate (see fixing requirements for roof battens) so long as the minimum penetration into the wall frame is achieved.

Explanatory Information

Where sheet bracing is also acting as structural bracing, fixing requirements are listed in AS 1684 and NASH Standard – Residential and Low-Rise Steel Framing, Part 2.

7.5.5 Eaves and soffit linings

[2019: 3.5.4.5]

Where provided, external fibre-cement sheets and linings used as eaves and soffit linings must—

(a) comply with AS/NZS 2908.2 or ISO 8336; and

(b) be fixed in accordance with Table 7.5.5 and Figure 7.5.5 using—

(i) 2.8 × 30 mm fibre-cement nails; or

(ii) No. 8 wafer head screws (for 4.5 mm and 6 mm sheets only); or

(iii) No. 8 self embedding head screws (for 6 mm sheets only).

Table 7.5.5: Trimmer and fastener spacings for 4.5 mm and 6 mm fibre-cement eaves and soffit linings

Maximum eaves width	Wind class	Maximum trimmer spacings (mm)		Maximum fastener spacings (mm)	
		Within 1200 mm of the external corners of the building	Elsewhere	Within 1200 mm of the external corners of the building	Elsewhere
600	N1	600	900	200	300
	N2	600	800	200	300
	N3	500	700	200	300
1200	N1	600	750	200	300
	N2	600	700	200	300
	N3	500	650	200	300

Figure 7.5.5: Eaves trimmer detail

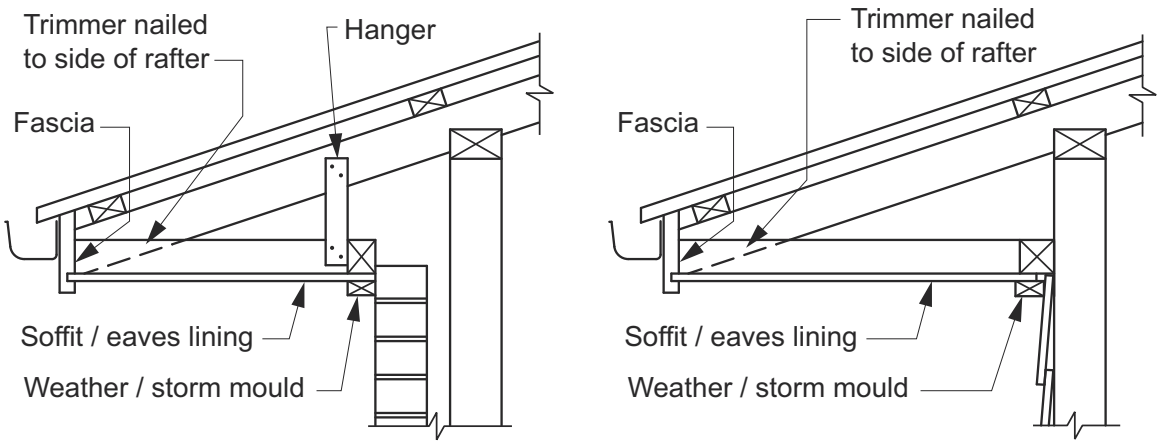

(a) Masonry-veneer construction **(b) Clad frame construction**

7.5.6 Flashings to wall openings

[2019: 3.5.4.6]

Openings in *external wall* cladding exposed to the weather must be flashed with materials complying with AS/NZS 2904 and in accordance with the following:

(a) *Flashings* must be provided to bottom, tops and sides of openings, except as permitted by (d), and must be installed so that the *flashing*—

(i) extends not less than 110 mm beyond the reveals on each side of the opening where practicable; and

(ii) is attached to the *window* and wall framing; and

(iii) at the top and bottom of the opening, drains to the outside face of the wall or cladding.

(b) Joins in the *flashing* must—

(i) overlap by not less than 75 mm in the direction of flow; and

(ii) be securely fastened at intervals of not more than 40 mm; and

(iii) have sealant installed between laps.

(c) The method of *flashing* must be suitable for the framing and cladding used and any reveal for the *window* or door system or any architrave or finishing trims that may be installed.

(d) The top of an opening need not be flashed where it is adequately protected by an eave of a width more than 3 times the height of the cladding above the opening (See Figure 7.5.6).

(e) *Flashings* must be securely fixed at least 25 mm under the cladding and extend over the ends and edges of the framing of the opening.

Figure 7.5.6: Weather protection of openings

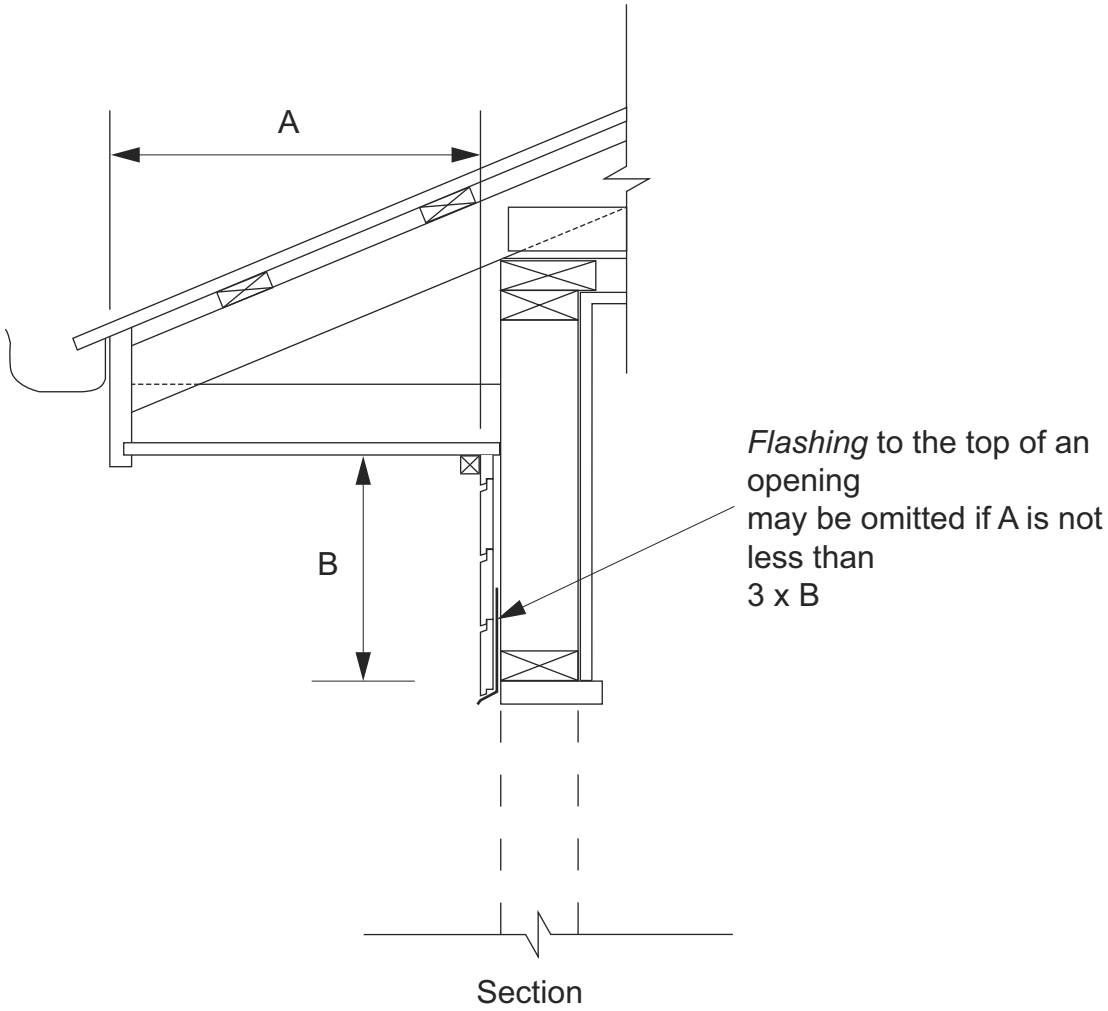

Explanatory Information

7.5.6(a)(i) applies 'where practicable' because it is often impractical to extend the *flashing* 110 mm beyond the reveal; for example, where openings are positioned adjacent to a corner or where two *windows* are within 110 mm of each other. In such cases consideration should be given to ensure the *flashing* prevents the penetration of water into the *external wall*.

7.5.7 Clearance between cladding and ground

[2019: 3.5.4.7]

(1) The minimum clearance from the bottom of the wall cladding to the adjoining *finished ground level* must be—

(a) 100 mm in *low rainfall intensity areas* or sandy, well-drained areas; or

(b) 50 mm above impermeable (paved or concreted) areas that slope away from the building in accordance with 3.3.3(a); or

(c) 150 mm in any other case.

(2) Wall cladding must extend a minimum of 50 mm below the bearer or lowest horizontal part of the suspended floor framing.

Explanatory Information

The required clearances under 7.5.7 may also be subject to other requirements for drainage in Part 3.3, clearances for inspection zones for termite management in Part 3.4 and screening and sealing of gap requirements for construction in *designated bushfire prone areas* in H7D4, where appropriate.

7.5.8 Parapet cappings

[2019: 3.5.4.8]

Where a wall cladding is used to form a parapet wall, the cladding must be attached to a supporting frame and have a capping installed that complies with the following:

(a) Cappings must—

(i) be purpose made, machine-folded sheet metal or equivalent sections of a material compatible with all up and downstream metal roof covering materials in accordance with 7.2.2(2); and

(ii) extend not less than 50 mm down the sides of the parapet; and

(iii) be separated from the supporting framing by a vapour permeable sarking installed in accordance with (f); and

(iv) be fixed with either self drilling screws or rivets with rubber washers at intervals of not more than 500 mm that do not penetrate the top of cappings, except at joints and corners.

(b) The top of the capping must slope a minimum of 5 degrees.

(c) Joints in cappings must—

(i) overlap by not less than 50 mm in the direction of flow; and

(ii) be securely fastened at intervals of not more than 40 mm; and

(iii) have sealant installed between laps.

(d) Fixing for cappings must be compatible with the capping material in accordance with 7.2.2.

(e) Lead cappings must not be used with prepainted steel or zinc/aluminium steel or on any roof if the roof is part of a *drinking water* catchment area.

(f) Sarking must comply with AS 4200.1 and be installed behind all wall cladding where parapets are installed, with—

(i) each adjoining sheet or roll being—

(A) overlapped not less than 150 mm; or

(B) taped together; and

(i) sarking fixed to supporting members at not more than 300 mm centres.

Explanatory Information

For the purposes of 7.5.8(f), sarking is *required* to be installed to the whole *external wall* which contains the parapet and extend to the top and back of the parapet. A gap should be provided between the sarking and the parapet capping to help control *condensation*.

8 Glazing

Part 8.1 **Scope and application of Section 8**

8.1.1 Scope

8.1.2 Application

Part 8.2 **Windows and external glazed doors**

8.2.1 Application

8.2.2 Installation of windows

Part 8.3 **Glass**

8.3.1 Application

8.3.2 Glazing sizes and installation

8.3.3 Fully framed glazing installed in perimeter of buildings

Part 8.4 **Glazing human impact**

8.4.1 Application

8.4.2 Doors, side panels and other framed glazed panels

8.4.3 Door side panels

8.4.4 Full height framed glazed panels

8.4.5 Glazed panels, other than doors or side panels, on the perimeter of rooms

8.4.6 Kitchen, bathroom, ensuite, spa room and splash-back glazing

8.4.7 Visibility of glazing

8.4.8 Identification of safety glass

Part 8.1 Scope and application of Section 8

8.1.1 Scope

[New for 2022]

This Section sets out the *Deemed-to-Satisfy Provisions* for—

(a) *windows* and external glazed doors (see Part 8.2); and

(b) glass (see Part 8.3); and

(c) glazing human impact (see Part 8.4).

Explanatory Information

These provisions relate to the design, manufacture and installation of *windows* in *external walls* and the use of glass in Class 1 and 10 buildings. The selection of glass in Part 8.3 applies to other assemblies that may not be in an *external wall* of a Class 1 or 10 building.

The terms *windows* and glazed assemblies are used throughout Section 8. The term *window* is defined in the NCC and relates to a device which is capable of transmitting natural light directly from outside a building or room when it is in the closed position. This is distinct from glazed assemblies which may also include elements located in internal parts of a building. These may be glazed panels, splash-backs, mirrors, shower screens or *window*-type assemblies that are not subject to wind loads and weatherproofing requirements.

A number of other parts of NCC Volume Two and the ABCB Housing Provisions also contain requirements relating to glazing in addition to this Part. They include:

- H1D5 of NCC Volume Two and Part 5.2 of the ABCB Housing Provisions for *flashing* material requirements.
- H7D2 of NCC Volume Two for glazed barriers for *swimming pool* enclosures.
- H7D4 for *windows* in buildings in *designated bushfire prone areas*.
- Part 13.3 of the ABCB Housing Provisions for glazing subject to energy efficiency requirements.

8.1.2 Application

[New for 2022]

The application of this Section is subject to the following:

(a) The Governing Requirements of NCC Volume Two.

(b) The State and Territory variations, additions and deletions contained in the Schedules to the ABCB Housing Provisions and NCC Volume Two.

Explanatory Information

In NCC 2019, the content of Section 8 of the ABCB Housing Provisions (other than content added in NCC 2022 or later) was contained in the acceptable construction practice for Part 3.6 of NCC 2019 Volume Two.

Part 8.2 Windows and external glazed doors

8.2.1 Application

[New for 2022]

Part 8.2 applies subject to the limitations set out in H1D8(1) and (2).

Explanatory Information

This Part does not cover the installation of assemblies that are internal or revolving doors, fixed louvres, skylights, rooflights and *windows* not installed in the vertical plane, *windows* in greenhouses or horticultural buildings or frameless sliding doors.

The term 'one piece framing' in H1D8(1)(a)(iv) generally refers to glazing installed in the *external wall* of a building where the external fabric is forming the frame.

8.2.2 Installation of windows

[New for 2022]

Windows must be installed in accordance with the following:

(a) Structural building loads must not be transferred to the *window* assembly.

(b) A minimum 10 mm gap must be provided between the top of the *window* assembly and any *loadbearing* framing or masonry wall element.

(c) The requirements of (b) may be increased where necessary to allow for frame settlement over wide openings.

(d) Packing, if provided between each *window* assembly and the frame, must be—

(i) located along each side and bottom; and

(ii) fixed to ensure the sides and bottom of the *window* assembly remain straight; and

(iii) clear of any *flashing* material.

Explanatory Information

It is important for *windows* to be fixed correctly in the external frame or wall of a building to prevent buckling, diagonal distortion or twisting that may compromise weathertightness around the perimeter of the opening. Correct installation is also critical to ensure *windows* resist design wind pressures that the *external walls* of the building are subject to over its expected life and transfer the resultant forces only to the framing members beside the *window*. Consideration should be given to any additional details for systems designed specifically to meet acoustic or energy efficiency requirements.

Window assemblies should be installed so they are as close as possible to being perpendicular with the vertical and horizontal planes and where all corners form right-angles, have equal distances when measured diagonally to ensure they are square.

A gap provided between the top of the assembly and the *external wall* frame will allow for settlement after construction and prevent the transfer of structural loads. Where packing is used between the openings in the *external wall* and the *window* assembly, it should be of a material that is compatible with both the frame and the *window* assembly. It should also be positioned and fixed to stay in place permanently and ensure the sides and sills remain straight.

Where aluminium sills of a *window* assembly may contact masonry, particularly mortar, an isolating material such as bituminous *membranes* or paints and caulking compounds containing zinc chromates should be used. Care must be taken to minimise any gaps between sills and external skins to prevent excessive ingress of water.

Explanatory Figure 8.2.2 provides guidance on the installation of *windows* and positioning of relevant fixing points.

Figure 8.2.2 (explanatory): Guidance for the installation of windows and positioning of relevant fixing points

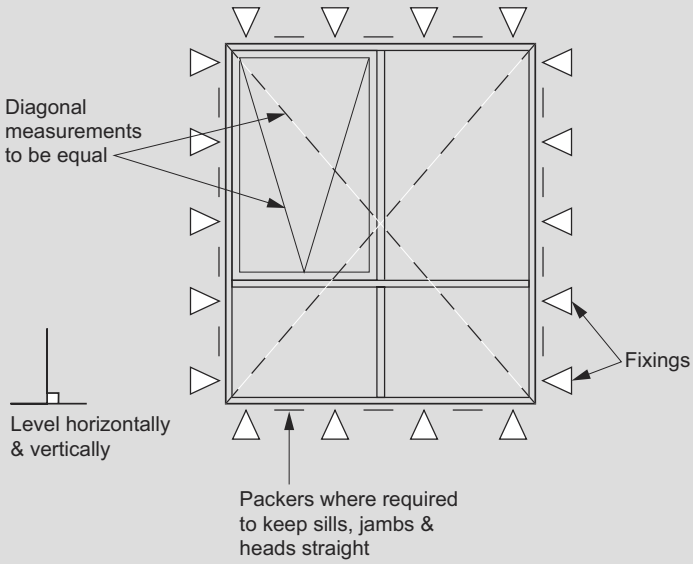

Part 8.3 Glass

8.3.1 Application

[New for 2022]

Glazing must comply with the following:

(a) 8.3.2 for glass sizes and installation.

(b) 8.3.3 for fully framed glazing installed in the perimeter of buildings.

(c) Part 8.4 for glazed assemblies subject to human impact.

(d) Glass used must be of a type within the scope of AS 1288.

(e) Glass used in barriers, except a *window* serving as a barrier, must withstand loading forces in accordance with AS 1170.1.

(f) Safety glass must be—

(i) legibly marked in accordance with 8.4.7; and

(ii) made visible in accordance with 8.4.8.

Explanatory Information

- This Part applies to the selection of glass only and does not include the installation of *windows* or framed glazed doors. This is due to *window* systems relying on the design and testing of structural members to withstand wind loads (e.g. mullions, transoms, and meeting rails and stiles) and the perimeter frame design, sealants and gaskets to resist water penetration.
- This Part does not cover glazing in assemblies that are constructed on site and are architectural one-off *windows* which are not design tested in accordance with AS 2047 or other assemblies that are second-hand, reused, recycled or heritage.
- Information on *design wind speed* for particular areas may be available from the *appropriate authority*.
- For glazing in *high wind areas*, refer to Part 2.2.

8.3.2 Glazing sizes and installation

[2019: 3.6.2]

Glazing used in buildings must comply with the following:

(a) Glazing used in the *perimeter of buildings* and supported on all sides must comply with the appropriate provisions listed in 8.3.3.

(b) Glazing used in areas where the potential for human impact could occur must comply with the appropriate provisions listed in Part 8.4.

(c) For 3 mm monolithic annealed glass, the maximum area must not be more than 0.85 m^2.

Explanatory Information

The selection of glass thickness relies not just on limit state wind loads but on a number of geometric criteria that include the influence of aspect ratio and slenderness factors. These factors are taken into account in Tables 8.3.3a, 8.3.3b and 8.3.3c.

8.3.3 Fully framed glazing installed in perimeter of buildings

[2019: 3.6.3]

Fully framed (supported on all sides) monolithic annealed glass installed in the *perimeter of buildings* must comply with—

(a) if the building is located in an area with a wind class not exceeding N1 – Table 8.3.3a; or

(b) if the building is located in an area with a wind class not exceeding N2 – Table 8.3.3b; or

(c) if the building is located in an area with a wind class not exceeding N3 – Table 8.3.3c.

Table 8.3.3a: Glass thickness for wind class not exceeding N1: monolithic annealed glass (mm)

Edge (mm)	300	450	600	750	900	1050	1200	1350	1500	1650
300	3	3	3	3	3	3	3	3	3	3
450	3	3	3	3	3	3	3	3	3	3
600	3	3	3	3	3	3	3	3	4	4
750	3	3	3	3	3	3	4	4	4	4
900	3	3	3	3	3	4	4	4	4	4
1050	3	3	3	3	4	4	4	4	4	4
1200	3	3	3	4	4	4	4	4	4	4
1350	3	3	3	4	4	4	4	4	4	4
1500	3	3	4	4	4	4	4	4	4	4
1650	3	3	4	4	4	4	4	4	4	4
1800	3	3	4	4	4	4	4	4	4	4
1950	3	4	4	4	4	4	4	4	4	4
2100	3	4	4	4	4	4	4	4	4	4
2250	3	4	4	4	4	4	4	4	4	4
2400	3	4	4	4	4	4	5	5	4	5
2550	3	4	4	4	4	4	5	5	4	5
2700	3	4	4	4	4	4	5	5	6	5

Table 8.3.3b: Glass thickness for wind class not exceeding N2: monolithic annealed glass (mm)

Edge (mm)	300	450	600	750	900	1050	1200	1350	1500	1650
300	3	3	3	3	3	3	3	3	3	3
450	3	3	3	3	3	3	3	3	3	3
600	3	3	3	3	3	3	3	3	4	4
750	3	3	3	3	3	3	4	4	4	4
900	3	3	3	3	3	4	4	4	4	4
1050	3	3	3	3	4	4	4	4	4	4
1200	3	3	3	4	4	4	4	4	4	4
1350	3	3	3	4	4	4	4	4	4	4
1500	3	3	4	4	4	4	4	4	4	4
1650	3	3	4	4	4	4	4	4	4	4
1800	3	3	4	4	4	4	4	4	4	5
1950	3	4	4	4	4	4	4	4	5	5
2100	3	4	4	4	4	4	4	5	5	6

Edge (mm)	300	450	600	750	900	1050	1200	1350	1500	1650
2250	3	4	4	4	4	4	5	5	5	6
2400	3	4	4	4	4	4	5	5	5	6
2550	3	4	4	4	4	4	5	5	5	6
2700	3	4	4	4	5	5	5	5	6	6

Table 8.3.3c: Glass thickness for wind class not exceeding N3: monolithic annealed glass (mm)

Edge (mm)	300	450	600	750	900	1050	1200	1350	1500	1650
300	3	3	3	3	3	3	3	3	3	3
450	3	3	3	3	3	3	3	3	3	3
600	3	3	3	3	3	3	3	3	4	4
750	3	3	3	3	3	3	4	4	4	4
900	3	3	3	3	3	4	4	4	4	4
1050	3	3	3	3	4	4	4	4	5	5
1200	3	3	3	4	4	4	4	5	5	5
1350	3	3	3	4	4	4	5	5	5	5
1500	3	3	4	4	4	5	5	5	5	6
1650	3	3	4	4	4	5	5	6	6	6
1800	3	3	4	4	4	5	5	6	6	6
1950	3	4	4	4	5	5	5	6	6	6
2100	3	4	4	5	5	5	6	6	6	8
2250	3	4	4	5	5	5	6	6	8	8
2400	3	4	4	5	5	5	6	6	8	8
2550	3	4	4	5	5	5	6	6	8	8
2700	3	4	4	5	6	6	6	8	8	8

Explanatory Information

- For other types of perimeter glazing including toughened, wired, laminated, unframed glazing and insulated glass units, refer to AS 1288.
- For monolithic annealed patterned glass thickness measurement refer to AS 1288.
- The thickness of glass in Tables 8.3.3a, 8.3.3b and 8.3.3c is dependent on the wind classification of the *site*, Ultimate Limit State (ULS) wind pressure set out in AS 4055, and the dimensions of the glass panel. AS 4055 has higher ULS wind pressures for parts of *external walls* within 1200 mm of external corners. The thickness of glass in Tables 8.3.3a, 8.3.3b and 8.3.3c is based on these higher ULS wind pressures and can also be used for glass in the general length of walls.

Part 8.4 Glazing human impact

8.4.1 Application

[New for 2022]

(1) Part 8.4 applies subject to the limitations set out in H1D8(1).

(2) Part 8.4 need not be complied with if H1D8(3) is complied with.

(3) The thickness and type of glazing installed in areas of a building that have a high potential for human impact (an area of a building frequented by the occupants during everyday activities in which a person could fall into or against the glazed panel) must comply as follows:

(a) Doors — in accordance with 8.4.2.

(b) Door side panels — in accordance with 8.4.3.

(c) Full height glass panels — in accordance with 8.4.4.

(d) Glazed panels, other than doors or side panels, on the perimeter of rooms — in accordance with 8.4.5.

(e) Bathrooms, ensuite and spa room glazing — in accordance with 8.4.6.

(f) Visibility of glazing — in accordance with 8.4.7.

(g) Identification of safety glass — in accordance with 8.4.8.

8.4.2 Doors, side panels and other framed glazed panels

[2019: 3.6.4.1]

Glass in doors must be Grade A safety glazing material in accordance with Table 8.4.2 and Figure 8.4.2, except that—

(a) unframed doors, other than those incorporated in *shower screens* or bath enclosures, must be glazed with toughened safety glass with a minimum nominal thickness of 10 mm or laminated toughened safety glass with a minimum total thickness of 10 mm; and

(b) individual pieces of monolithic annealed glass incorporated in leadlights may be used, to a maximum area of 0.05 m^2 with a minimum nominal thickness of 3 mm; and

(c) for annealed and annealed decorated glass panels in doors—

(i) for 3 mm and 4 mm annealed glass, the maximum area must not be more than 0.1 m^2 with a maximum panel width of 125 mm; and

(ii) for 5 mm and 6 mm annealed glass, the maximum area must not be more than 0.26 m^2 with a maximum panel width of 300 mm; and

(d) for annealed glass in fully framed panels with a thickness of 10 mm or more, with or without bevelled edges, the maximum area must not be more than 0.5 m^2; and

(e) doors in bathrooms, ensuites and spa rooms must be glazed in accordance with 8.4.6.

Table 8.4.2: Maximum areas of glazing material for framed glass doors, framed glass side panels and other framed glazed panels

Type of glass	Minimum nominal thickness (mm)	Maximum area of pane (m^2)
Patterned or clear monolithic annealed glass	5	0.3
Patterned or clear monolithic annealed glass	6	0.9
Grade A toughened and toughened laminated safety glass	3	1

Type of glass	Minimum nominal thickness (mm)	Maximum area of pane (m^2)
Grade A toughened and toughened laminated safety glass	4	2
Grade A toughened and toughened laminated safety glass	5	3
Grade A toughened and toughened laminated safety glass	6	4
Grade A laminated safety glass	5.38	2.2
Grade A laminated safety glass	6.38	3
Grade A laminated safety glass	8.38	5

Figure 8.4.2: Identification of glazing requirements for doors and side panels

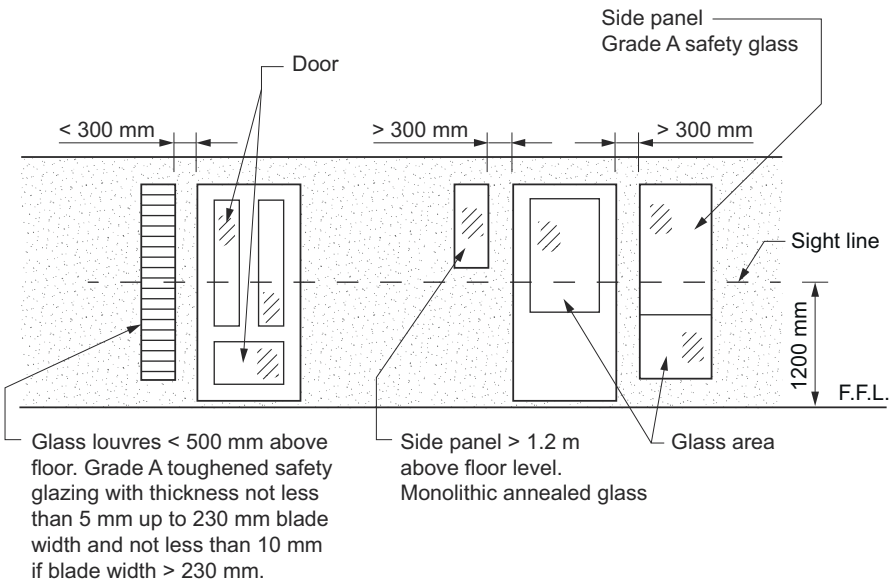

Figure Notes

For door and side panel glazing areas – see Table 8.4.2.

Explanatory Information

Larger areas of monolithic annealed glass in leadlights are not permitted regardless of glass thickness.

8.4.3 Door side panels

[2019: 3.6.4.2]

(1) All framed glass (except leadlight panels) in side panels with their nearest vertical sight line less than 300 mm from the nearest edge of the doorway opening must be Grade A safety glazing material in accordance with Table 8.4.2 and Figure 8.4.2, except that—

(a) where the lowest visible sight line is more than 1.2 m above the highest abutting finished floor level, monolithic annealed glass with a minimum thickness of 5 mm and an area of not more than 0.3 m^2 may be used; or

(b) where the lowest visible sight line is more than1.2 m above the highest abutting finished floor level, monolithic annealed glass with a minimum thickness of 10 mm with an area of not more than 0.5 m^2, may be used; or

(c) where the side panel consists of glass louvres with exposed edges or where the louvres are installed less than 500 mm above the highest abutting finished floor level—

(i) for blade widths not more than 230 mm with blade lengths not more than 1 m, Grade A toughened safety

glazing not less than 5 mm thick must be used; and

(ii) for blade widths more than 230 mm, Grade A toughened safety glazing not less than 10 mm thick must be used.

(2) Framed glass panels with the nearest vertical sight line not less than 300 mm from the nearest edge of the door opening are not considered to be side panels for the purposes of (1).

8.4.4 Full height framed glazed panels

[2019: 3.6.4.3]

(1) A glazed panel located in a building so that it is capable of being mistaken for an *unobstructed opening* must be glazed with Grade A safety glazing material in accordance with Table 8.4.2.

(2) Glazed panels are not considered an *unobstructed opening* where any of the following apply:

(a) The clear opening width is not more than 500 mm.

(b) The lowest sight line of the opening is not less than 500 mm above the highest abutting finished floor level.

(c) The glass is made apparent by means of transoms, colonial bars, other components of the glazing system, permanent motifs or other decorative treatment on or etched into the glass, of sufficient magnitude to be readily apparent, or the glass is opaquely coloured or patterned to indicate its presence.

(d) A chair rail or handrail not less than 40 mm thick, or the like, is provided at a height of not less than 700 mm above the adjoining ground level.

(e) The difference in floor level on either side of the panel is greater than 1000 mm.

8.4.5 Glazed panels, other than doors or side panels, on the perimeter of rooms

[2019: 3.6.4.4]

All framed glazing where the lowest sight line of the glazing panel is less than 500 mm from the highest abutting finished floor level (see Figure 8.4.5) must be—

(a) Grade A safety glazing material in accordance with Table 8.4.2; or

(b) monolithic annealed glass not less than 5 mm nominal thickness provided that the area of the glazing panel is not more than 1.2 m^2.

Figure 8.4.5: Identification of glazing requirements for glazed panels

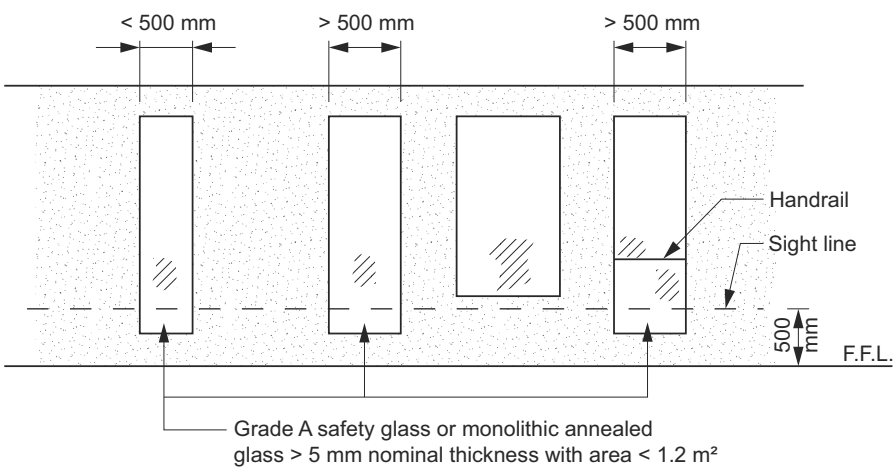

8.4.6 Kitchen, bathroom, ensuite, spa room and splash-back glazing

[2019: 3.6.4.5]

(1) All glazing in kitchens, bathrooms, ensuites, spa rooms or the like, including shower doors, *shower screens*, bath enclosures, and associated *windows* and doors (including cabinet doors), where the lowest sight line is less than 2.0 m above the highest abutting finished level of the floor, bottom of the bath, or shower base, must—

(a) for framed panels, be glazed with Grade A safety glazing material in accordance with Table 8.4.2; or

(b) for panels or doors with any edge exposed, be toughened safety glass in accordance with Table 8.4.6 with a minimum nominal thickness of 6 mm.

(2) Monolithic annealed glass may be used for—

(a) mirrors, provided a fixed vanity or bench with a height of not less than 760 mm, depth of not less than 300 mm and extending the full width of the mirror is, located in front of the mirror; or

(b) splash-backs, provided it is fully backed by and continuously adhered to a solid wall material or a fixed cabinet or bench that is—

(i) a height not less than 760 mm; and

(ii) a depth not less than 300 mm; and

(iii) extending the full width of the splash-back; and

(iv) located in front of the splash back.

Table 8.4.6: Maximum areas of safety glazing materials for shower doors, shower screens and bath enclosures

Type of glass	Standard nominal thickness (mm)	Maximum area of pane (m^2)	Area (Figure 8.4.6)
Safety organic coated glass	3	1	A, B, C, D
Safety organic coated glass	4	1.5	A, B, C, D
Safety organic coated glass	5	2	A, B, C, D
Safety organic coated glass	≥ 6	3	A, B, C, D

Figure 8.4.6: Identification of glazing requirements for bathrooms, ensuites and spa rooms

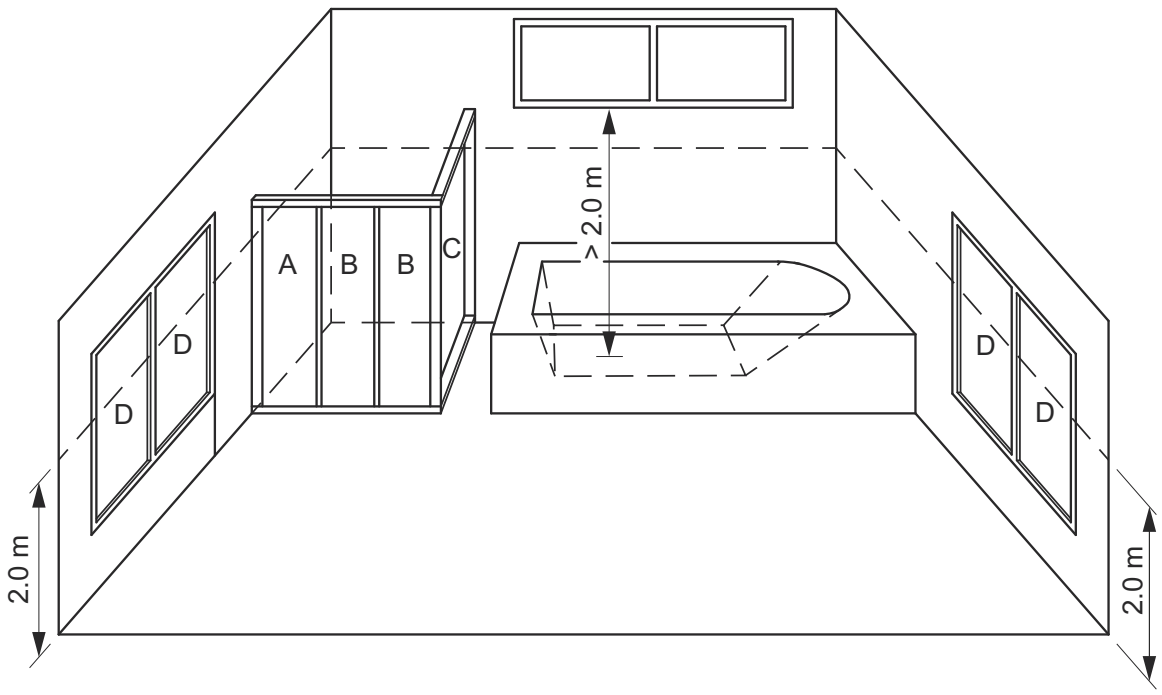

Explanatory Information

Care should be taken when using showers fitted with safety organic-coated glass and laminated safety glass products that are liable to damage from thermal shock. Thermal shock occurs from hot water from the shower hitting the *shower screen* during cold weather.

The requirements for glass splashbacks used near gas appliances are covered in AS/NZS 5601.

8.4.7 Visibility of glazing

[2019: 3.6.4.6]

(1) If the presence of glazing in a door, side panel or panel capable of being mistaken for a doorway or opening is not made apparent in accordance with 8.4.4(2)(c), the glass must be marked to make it readily visible in accordance with (2).

(2) Marking must be in the form of an opaque band not less than 20 mm in height located so that—

(a) the upper edge is not less than 700 mm above the floor; and

(b) the lower edge is not more than 1.2 m above the floor.

(3) A band or marking is not *required* where any of the following applies:

(a) The height of the glazing is not more than 1 m in any part.

(b) The width of the glazing panel is not more than 500 mm in any part.

(c) There is no glazing within 500 mm of the floor.

(d) The glazing is provided with not less than one fixed glazing bar which must—

(i) be firmly attached to the stiles to locate and protect each face of the glass; and

(ii) be located with its upper edge not less than 500 mm and its bottom edge not more than 1 m above the floor; and

(iii) have a face width not less than 40 mm.

Explanatory Information

- Making the glass visible by marking is not a substitute for the use of safety glazing in accordance with this Part.
- A broken line or patterns may be an acceptable form of marking provided it meets the criteria set out in 8.4.7(2).

8.4.8 Identification of safety glass

[New for 2022]

All safety glazing material in Tables 8.4.2 and Table 8.4.6 installed in accordance with this Part must comply with the following:

(a) Safety glass must be marked in the form of either permanent etching or a label that cannot be reused once removed.

(b) The permanent etching or label must state the following information:

(i) The Standard to which the safety glass has been tested.

(ii) Registered name of the manufacturer or supplier.

(iii) Grade of the safety glass.

(iv) Nominal thickness of the safety glass.

(v) The type of safety glass.

Explanatory Information

The labelling of safety glass is not intended to remain after completion of construction. Labelling complying with 8.4.8 should remain in place on safety glass to allow relevant practitioners to confirm and certify that the correct type of safety

glass has been installed in a specific area of the building.

If a label is able to be removed from the glass, it must be comprised of a material that self-destructs upon removal so as to prevent it being reused on other glass panels.

The type of safety glass can be identified in a way that describes the type used such as “L” for laminated glass or “T” for toughened glass, etc.

9 Fire safety

Part 9.1 Scope and application of Section 9

9.1.1 Scope

9.1.2 Application

Part 9.2 Fire separation of external walls

9.2.1 External walls of Class 1 buildings

9.2.2 Measurement of distances

9.2.3 Construction of external walls

9.2.4 Class 10a buildings

9.2.5 Protection of Class 1 buildings — Class 10a between Class 1 and the allotment boundary

9.2.6 Protection of Class 1 buildings—Class 10a between Class 1 and other buildings on allotment

9.2.7 Protection of Class 1 buildings—separation of Class 10a buildings on an allotment

9.2.8 Open carports

9.2.9 Allowable encroachments

9.2.10 Roof lights

Part 9.3 Fire protection of separating walls and floors

9.3.1 Separating walls

9.3.2 Services in separating walls

9.3.3 Roof lights

9.3.4 Horizontal projections

Part 9.4 Fire protection of garage top dwellings

9.4.1 Walls requiring protection

9.4.2 Separating floors

Part 9.5 Smoke alarms and evacuation lighting

9.5.1 Smoke alarm requirements

9.5.2 Location – Class 1a buildings

9.5.3 Location – Class 1b buildings

9.5.4 Installation of smoke alarms

9.5.5 Lighting to assist evacuation – Class 1b buildings

Part 9.1 Scope and application of Section 9

9.1.1 Scope

[New for 2022]

(1) This Section sets out the *Deemed-to-Satisfy Provisions* for—

(a) fire separation of *external walls* (see Part 9.2); and

(b) fire protection of *separating walls* (see Part 9.3); and

(c) fire separation of garage top dwellings (see Part 9.4); and

(d) smoke alarms and evacuation lighting (see Part 9.5).

(2) For other fire safety provisions not included in this Section, refer to NCC Volume Two H3D2(1) and (2): Fire hazard properties.

9.1.2 Application

[New for 2022]

The application of this Section is subject to the following:

(a) The Governing Requirements of NCC Volume Two.

(b) The State and Territory variations, additions and deletions contained in the Schedules to the ABCB Housing Provisions and NCC Volume Two.

Explanatory Information

In NCC 2019, the content of Section 9 of the ABCB Housing Provisions (other than content added in NCC 2022 or later) was contained in the acceptable construction practice for Parts 3.7.2 to 3.7.5 of NCC 2019 Volume Two.

The content of Part 3.7.1 has been retained within Part H3 of NCC Volume Two as it contains requirements which affect how other provisions referenced in Part H3 are applied.

Part 9.2 Fire separation of external walls

SA 9.2.1

9.2.1 External walls of Class 1 buildings

[2019: 3.7.2.2]

An *external wall* of a Class 1 building, and any openings in that wall, must comply with 9.2.3 if the wall is less than—

(a) 900 mm from an allotment boundary other than the boundary adjoining a road alignment or other public space; or

(b) 1.8 m from another building on the same allotment other than a Class 10 building associated with the Class 1 building or a detached part of the same Class 1 building.

9.2.2 Measurement of distances

[2019: 3.7.2.3]

(1) The distance from any point on an *external wall* of a building to an allotment boundary or another building is the distance to that point measured along a line at right angles from the allotment boundary or *external wall* of the other building which intersects that point without being obstructed by a wall complying with 9.2.3.

(2) Where a wall within a specified distance is *required* to comply with 9.2.3, only that part of the wall (including any openings) within the specified distance need be constructed in that manner (see Figure 9.2.2a, Figure 9.2.2b and Figure 9.2.2c).

(3) Where the distance measured is between attached or detached buildings of different heights, the distance must be taken from the *external wall* with the highest elevation measured at right angles to a point that intersects the nearest part of a vertical projection above the adjacent building, excluding any eave overhang (see Figure 9.2.2d and Figure 9.2.2e).

SA 9.2.2(4)

Figure 9.2.2a: Walls at right angles to the boundary

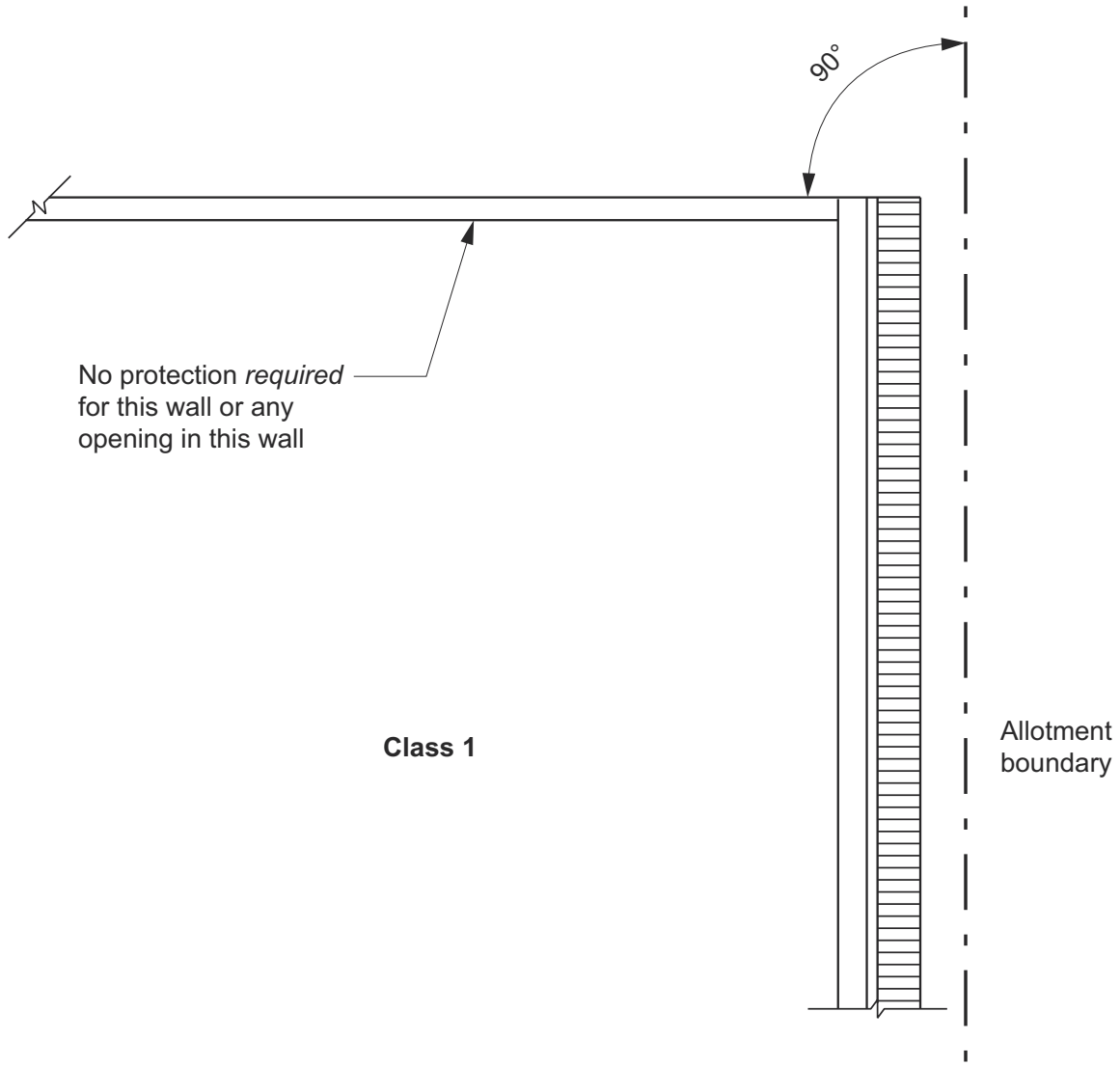

Figure Notes

(1) No protection *required* for the wall at right angles or more to the boundary.

(2) For protection of encroachments refer to 9.2.9.

Figure 9.2.2b: Measurement of distances — Full wall protection (Plan view)

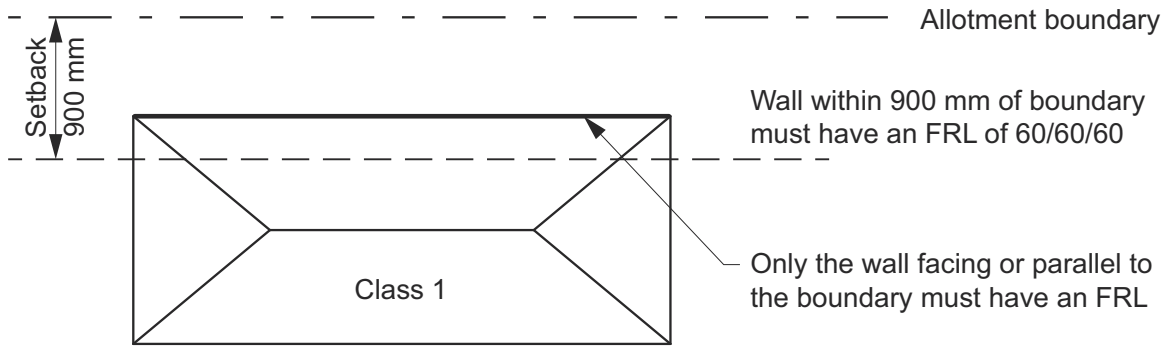

Figure Notes

Setback distance is measured at right angles to the boundary.

Figure 9.2.2c: Measurement of distances — Part walls protection (Plan view)

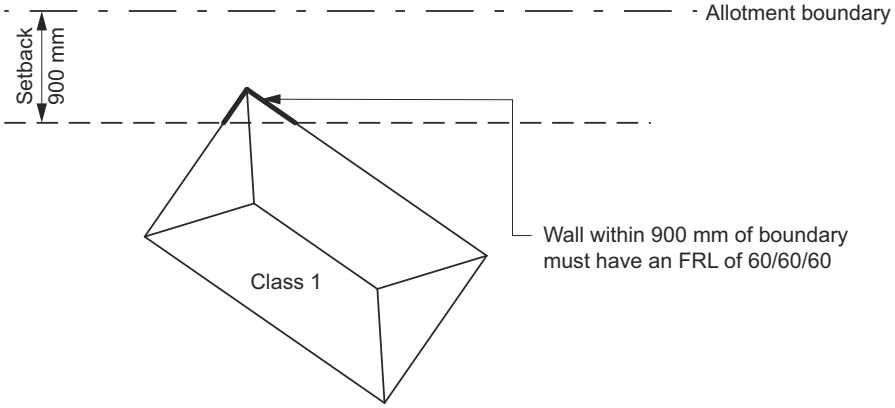

Figure Notes

Setback distance is measured at right angles to the boundary.

Figure 9.2.2d: Measurement of distance — Buildings of different heights — Class 1 buildings on same allotment

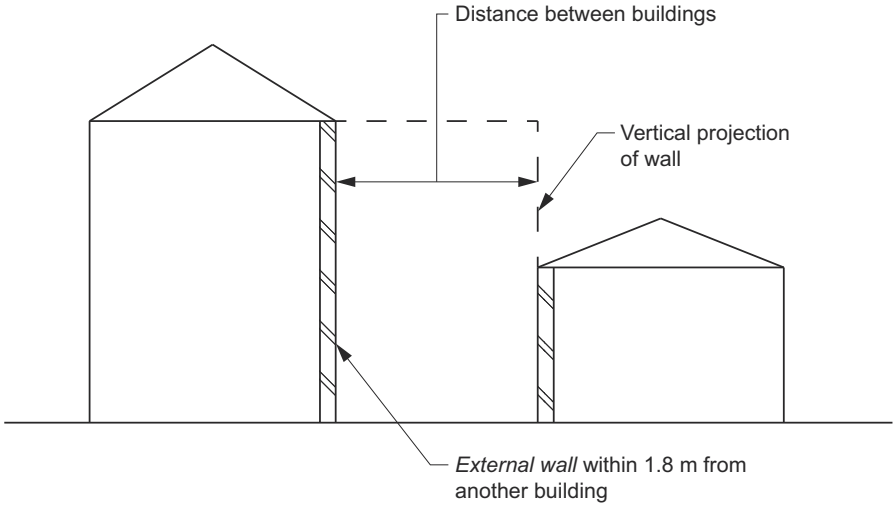

Figure 9.2.2e: Measurement of distance — Buildings of different heights — Attached Class 1 buildings on same allotment

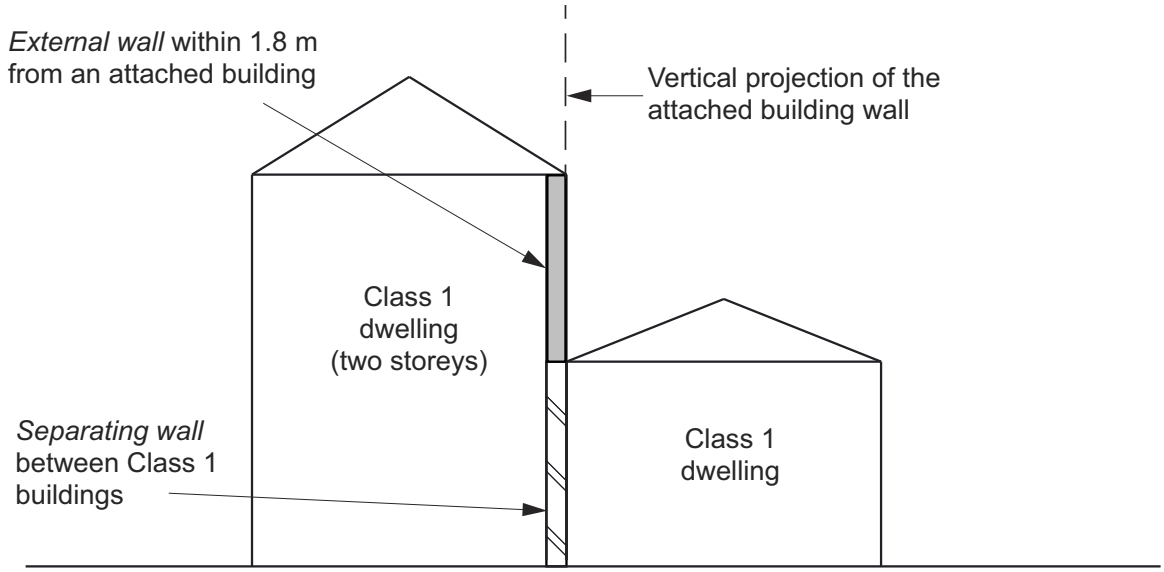

9.2.3 Construction of external walls

[2019: 3.7.2.4]

(1) *An external wall* (including a gable) *required* to be *fire-resisting* (referred to in 9.2.1 or 9.2.4) must—

(a) commence at the footings or ground slab, except where the *external wall* commences above a *separating wall* complying with 9.3.1 (see Figure 9.2.2e); and

(b) extend to—

(i) the underside of a *non-combustible* roof covering, except that a wall may terminate not more than 200 mm from the underside of a *non-combustible* roof covering, where the area between the *external wall* and underside of the roof covering is sealed with a *non-combustible* fascia, gutter or *flashing*; or

(ii) the underside of a *non-combustible* eaves lining (See Figures 9.2.3a and b); and

(c) be constructed in accordance with (2).

(2) A wall *required* by (1) must—

(a) have an FRL of not less than 60/60/60 when tested from the outside; or

(b) be of masonry-veneer construction in which the external masonry veneer is not less than 90 mm thick; or

(c) be of masonry construction not less than 90 mm thick.

(3) Openings in *external walls required* to be *fire-resisting* (referred to in 9.2.1 or 9.2.4) must be protected by—

(a) non-openable fire *windows* or other construction with an FRL of not less than –/60/–; or

(b) *self-closing* solid core doors not less than 35 mm thick.

(4) The requirements of (3) do not apply to a *window* in a non-*habitable room* that is located adjacent to and not less than 600 mm from the boundary of an adjoining allotment or 1.2 m from another building on the same allotment provided that—

(a) in a bathroom, laundry or toilet, the opening has an area of not more than 1.2 m^2; or

(b) in a room other than one referred to in (a), the opening has an area of not more than 0.54 m^2 and—

(i) the *window* is steel-framed, there are no opening sashes and it is glazed in wired glass; or

(ii) the opening is enclosed with translucent hollow glass blocks.

(5) Subfloor vents, roof vents, weepholes, control joints, construction joints and penetrations for pipes, conduits and the like need not comply with (3).

Figure 9.2.3a: Typical construction of external walls

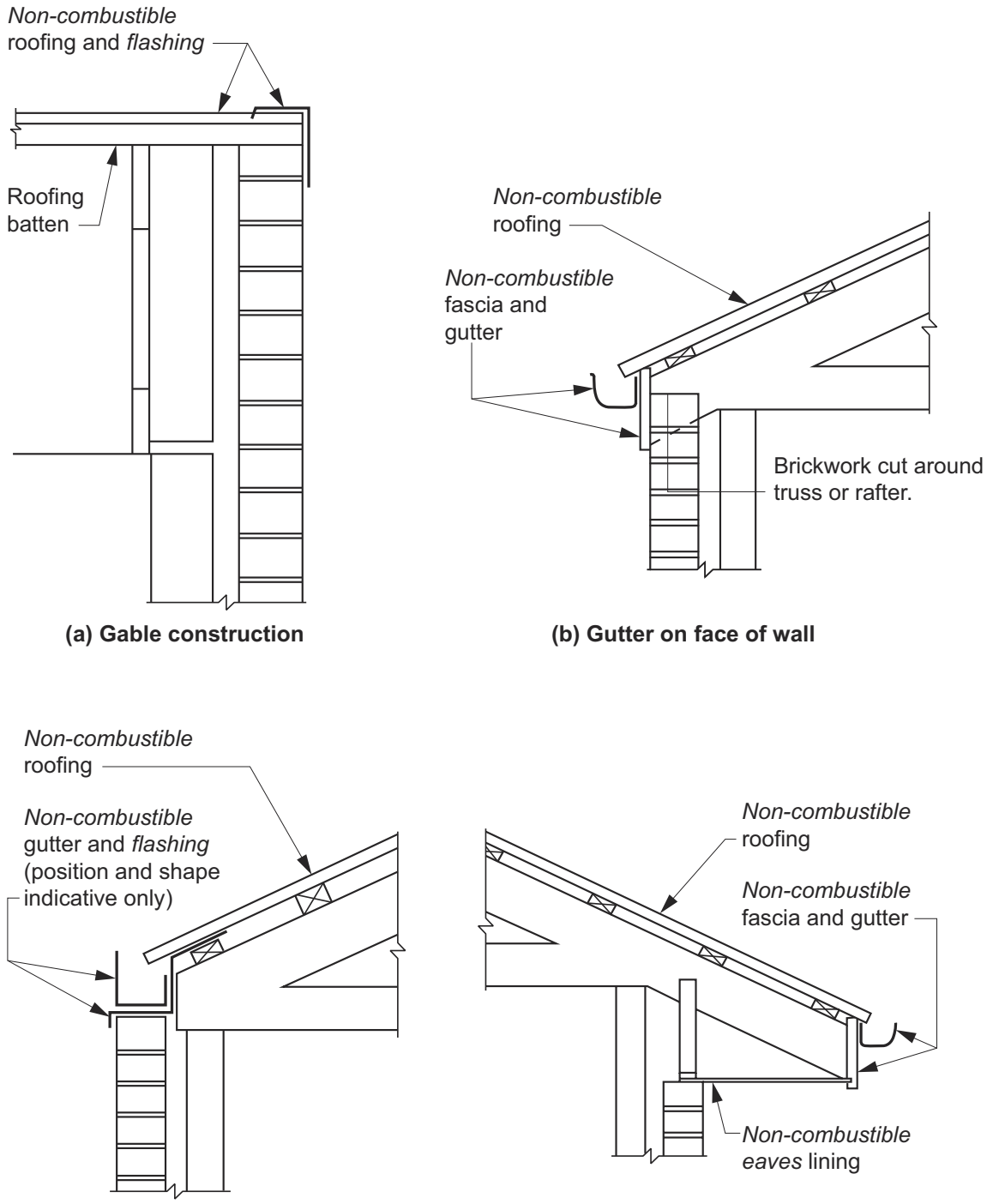

(a) Gable construction **(b) Gutter on face of wall**

(c) Gutter on top of wall **(d) Eaves construction**

Figure Notes

(1) The *external wall* is deemed to extend to the underside of *non-combustible* roof covering, or *non-combustible* eaves lining, when constructed as shown.

(2) Where sarking is installed it must be located so that ponding of water is avoided between the fascia and the first roofing batten.

(3) The location of *flashing* and framing is indicative only.

(4) Masonry shown in diagram (b) is to be terminated in accordance with 9.2.3(1)(b).

Figure 9.2.3b: Typical construction of external walls — attached Class 1 buildings on the same allotment

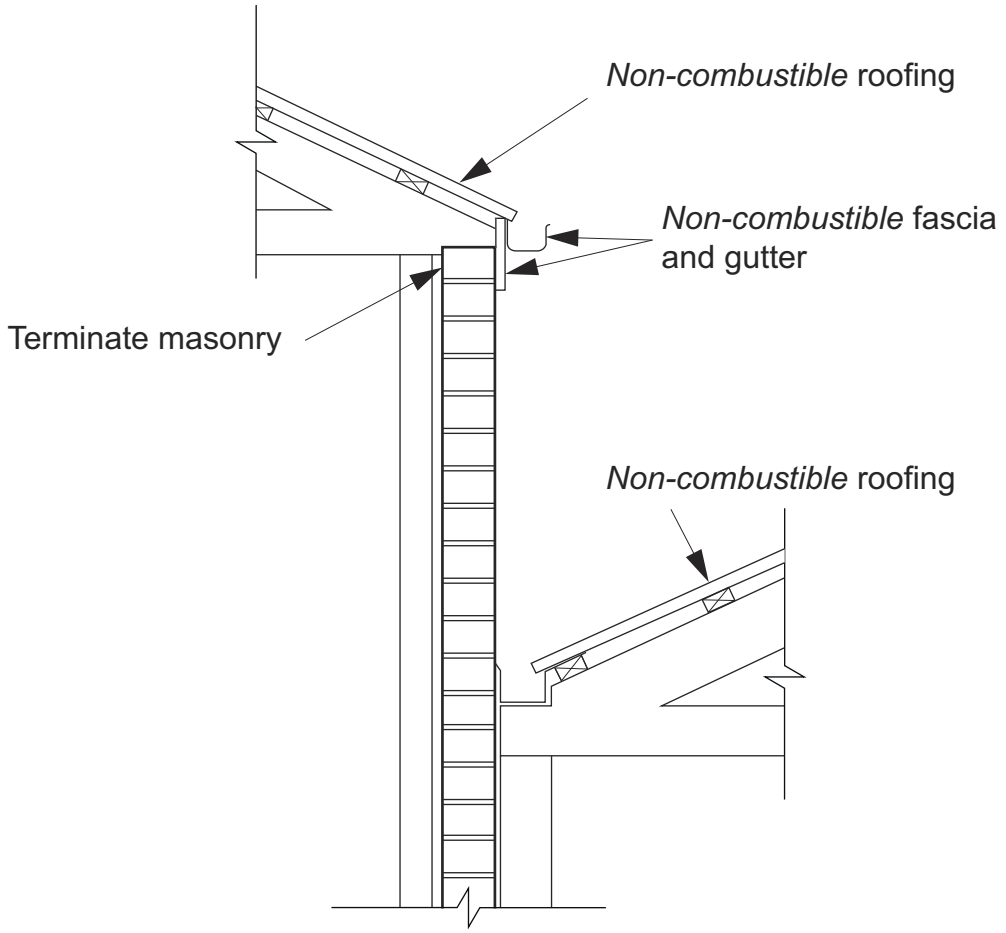

Attached Class 1 buildings on the same allotment

Figure Notes

(1) The *external wall* is deemed to extend to the underside of *non-combustible* roof covering, or *non-combustible* eaves lining, when constructed as shown.

(2) Where sarking is installed it must be located so that ponding of water is avoided between the fascia and the first roofing batten.

(3) The location of *flashing* and framing is indicative only.

(4) Masonry shown in diagram (b) is to be terminated in accordance with 9.2.3(1)(b).

Explanatory Information

- A *Performance Solution* must be used where an *external wall required* to be *fire-resisting* does not commence in accordance with 9.2.3(1)(a).
- The intent of the typical construction details shown in Figures 9.2.3a and b are to ensure that *combustible* materials (external or internal) are not directly exposed to fire at the junction of the wall and *non-combustible* roof, eaves lining, guttering and the like. Other forms of construction may also be acceptable provided that they achieve this intent.
- See Figure 9.2.2a and clause 10.7.3 for internal *separating wall* construction under one common roof.

9.2.4 Class 10a buildings

[2019: 3.7.2.5]

(1) A Class 1 building must be protected by a method in—

(a) 9.2.5 where a Class 10a building is located between or adjacent to a Class 1 building and a boundary alignment

that is not a boundary with a road alignment or other public space; or

(b) 9.2.6 where a Class 10a building is located between or adjacent to a Class 1 building it is associated with and another building on the same allotment; or

(c) 9.2.7 where two or more Class 10a buildings on the same allotment are located between and are associated with different Class 1 buildings.

(2) A Class 10a building must not significantly increase the risk of spread of fire between Class 2 to 9 buildings.

SA 9.2.4(3)

SA 9.2.4(4)

Explanatory Information

9.2.4(1)(a) ensures that when a Class 10 building is located between an allotment boundary and a Class 1 building or another building on the same allotment, either directly or indirectly, that the Class 1 building be protected by a wall with an FRL.

The intention is to prevent the spread of fire from an allotment boundary (*fire source feature*) to a Class 1 building via a Class 10a building. Where a Class 10a building is not sited directly and wholly between the allotment boundary and the Class 1 building (see 9.2.5), the potential of fire spreading from the allotment boundary to the Class 1 still exists. Therefore, fire separation would be *required*.

9.2.4 does not apply to a boundary that adjoins a road or public space such as parklands, lakes, rivers and the like where the construction of buildings is unlikely.

9.2.5 Protection of Class 1 buildings — Class 10a between Class 1 and the allotment boundary

[2019: Figure 3.7.2.4]

The following methods are acceptable for the protection of a Class 1 building where a Class 10a building is located between or adjacent to a Class 1 building and a boundary alignment that is not a boundary with a road alignment or other public space:

(a) The Class 10a building is not less than 900 mm from the allotment boundary, other than the boundary adjoining a road alignment or other public space, as shown in Figure 9.2.5a.

(b) An *external wall* of the Class 10a building which is less than 900 mm from an allotment boundary, other than the boundary adjoining a road alignment or other public space, complies with 9.2.3 as shown in Figure 9.2.5b.

(c) An *external wall* of the Class 10a building, which is less than 900 mm from the Class 1 building, complies with 9.2.3 as shown in Figure 9.2.5c.

(d) The Class 1 building is not less than 900 mm from the Class 10a building, as shown in Figure 9.2.5d.

(e) An *external wall* of the Class 1 building, which is less than 900 mm from the Class 10a building, complies with 9.2.3, as shown in Figure 9.2.5e.

(f) An *external wall* of the Class 10a building which is less than 900 mm from an allotment boundary other than the boundary adjoining a road alignment or other public space, complies with 9.2.3, as shown in Figure 9.2.5f.

(g) An *external wall* of the Class 10a building, which is less than 900 mm from the *external wall* of the Class 1 building, complies with 9.2.3, as shown in Figure 9.2.5g.

(h) An *external wall* of the Class 1 building, which is less than 900 mm from a Class 10a building that is situated less than 900 mm from an allotment boundary, complies with 9.2.3, as shown in Figure 9.2.5h.

(i) The *external wall* of the Class 1 and Class 10a building which are less than 900 mm from an allotment boundary, other than the boundary adjoining a road alignment or other public space, complies with 9.2.3 as shown in Figure 9.2.5i.

Figure 9.2.5a: Class 10a building 900 mm from allotment boundary

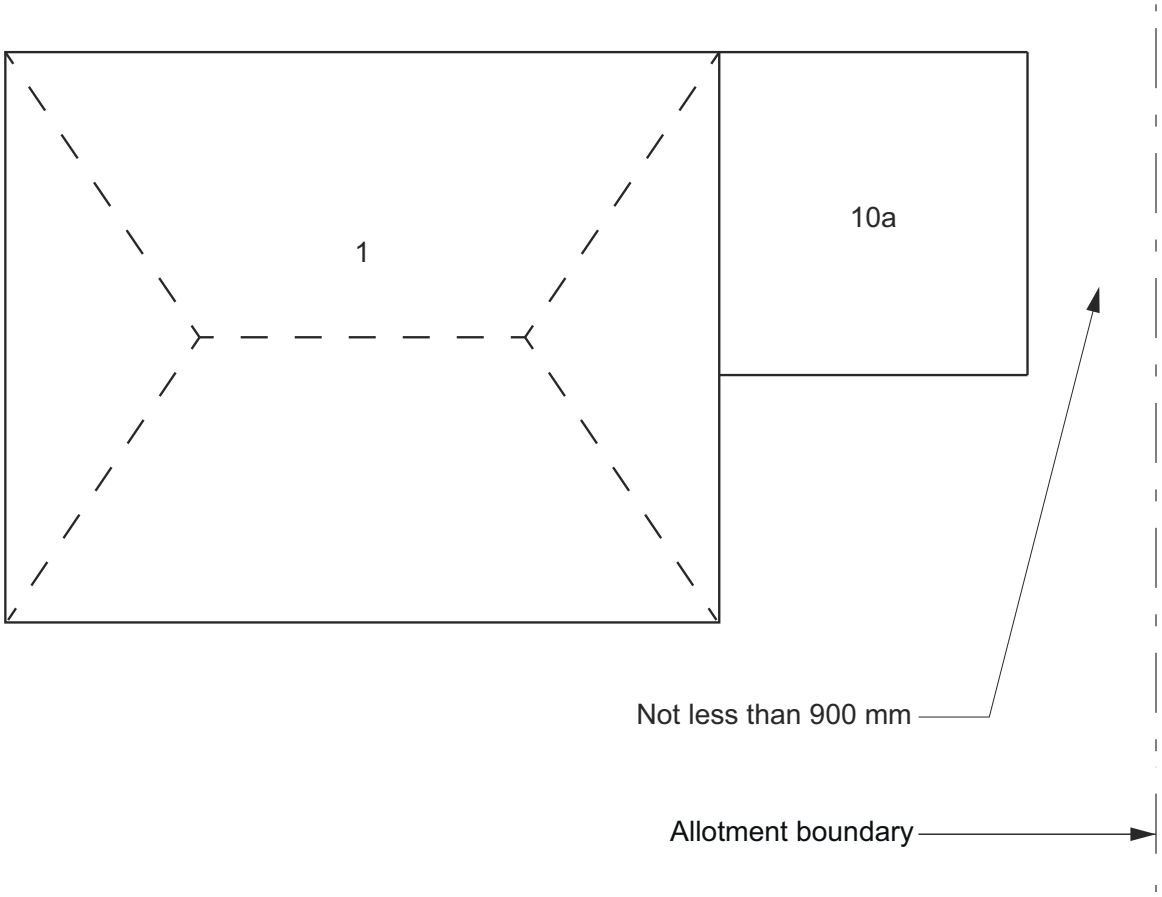

Figure 9.2.5b: External wall to Class 10a building with FRL (method 1)

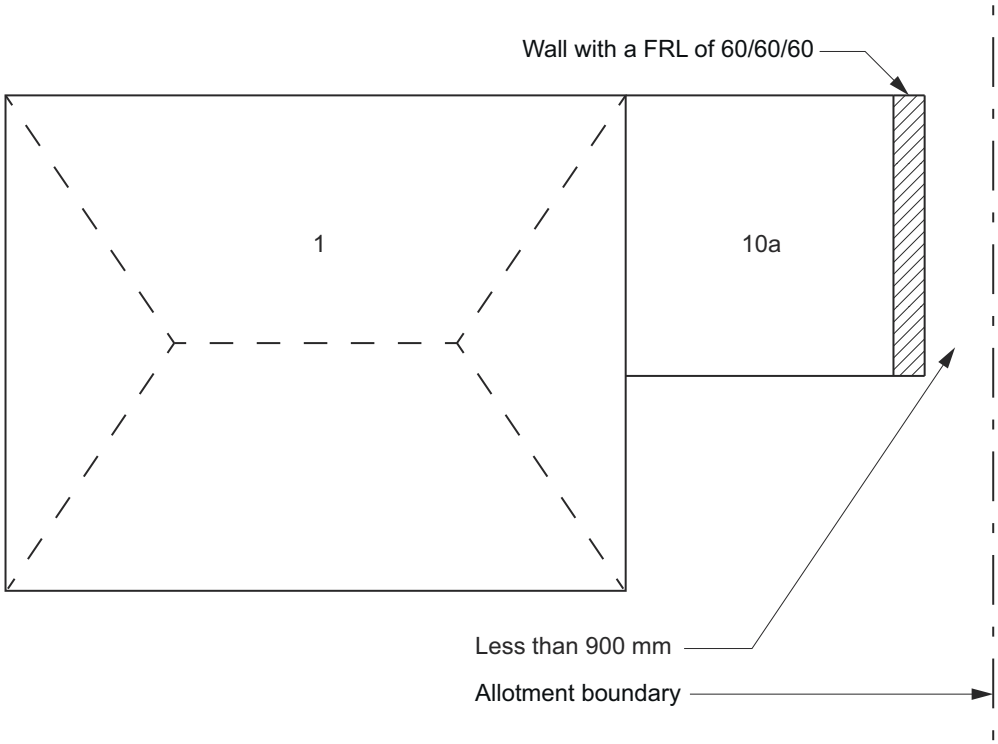

Figure 9.2.5c: External wall to Class 10a building with FRL (method 2)

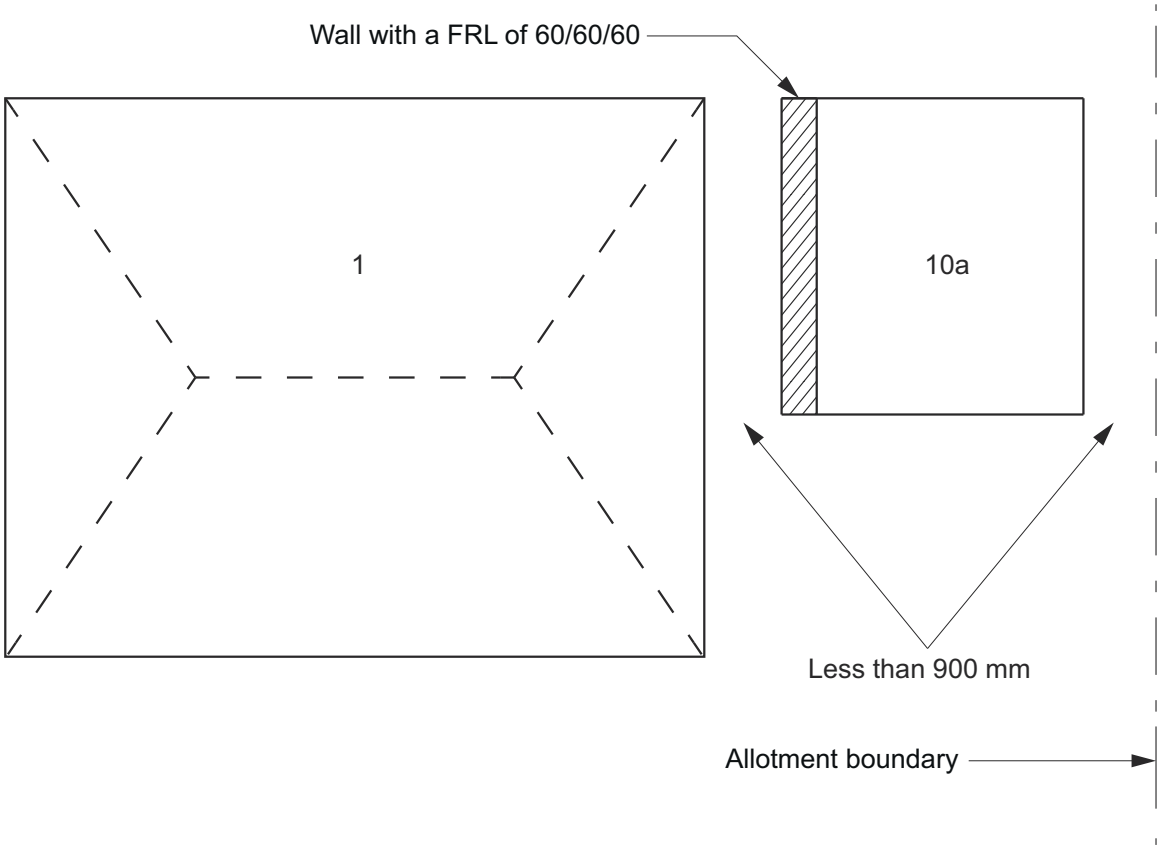

Figure 9.2.5d: 900 mm separation between buildings

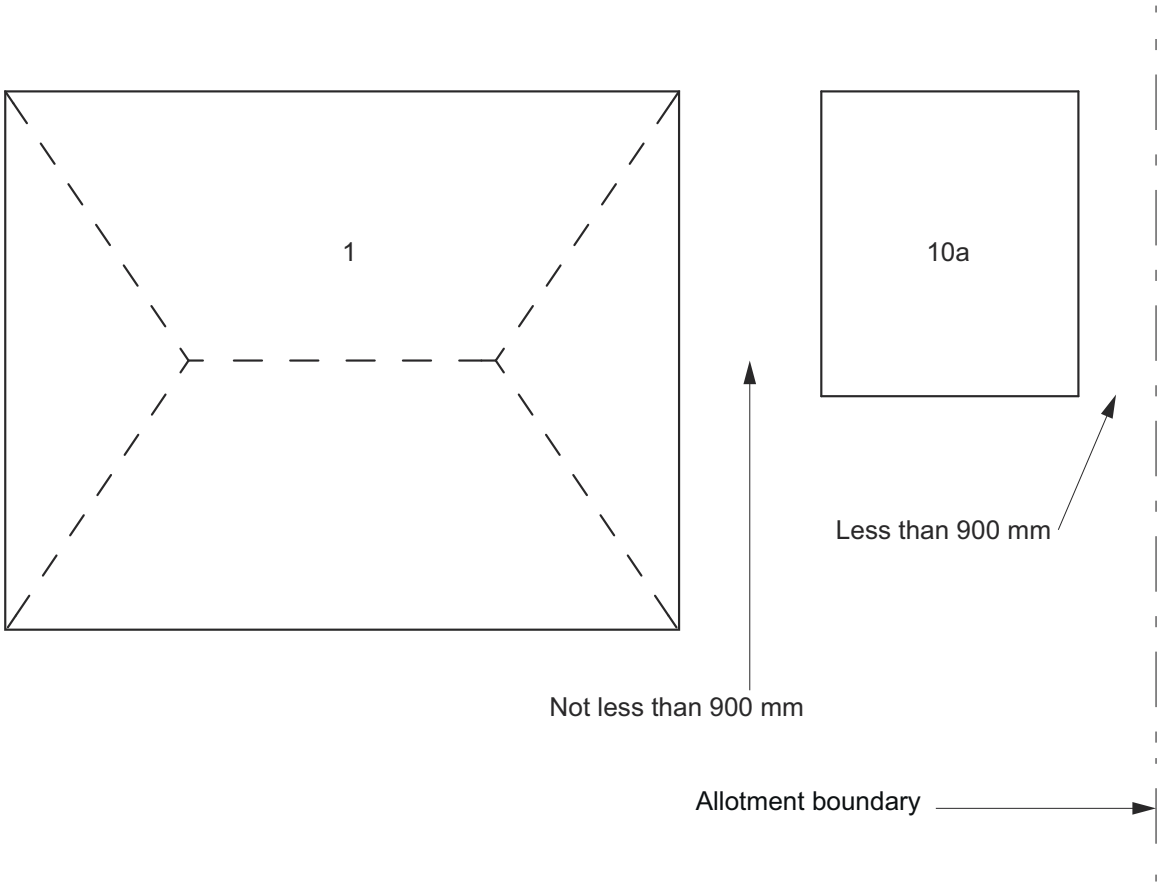

Figure 9.2.5e: Class 1 building with FRL to external wall

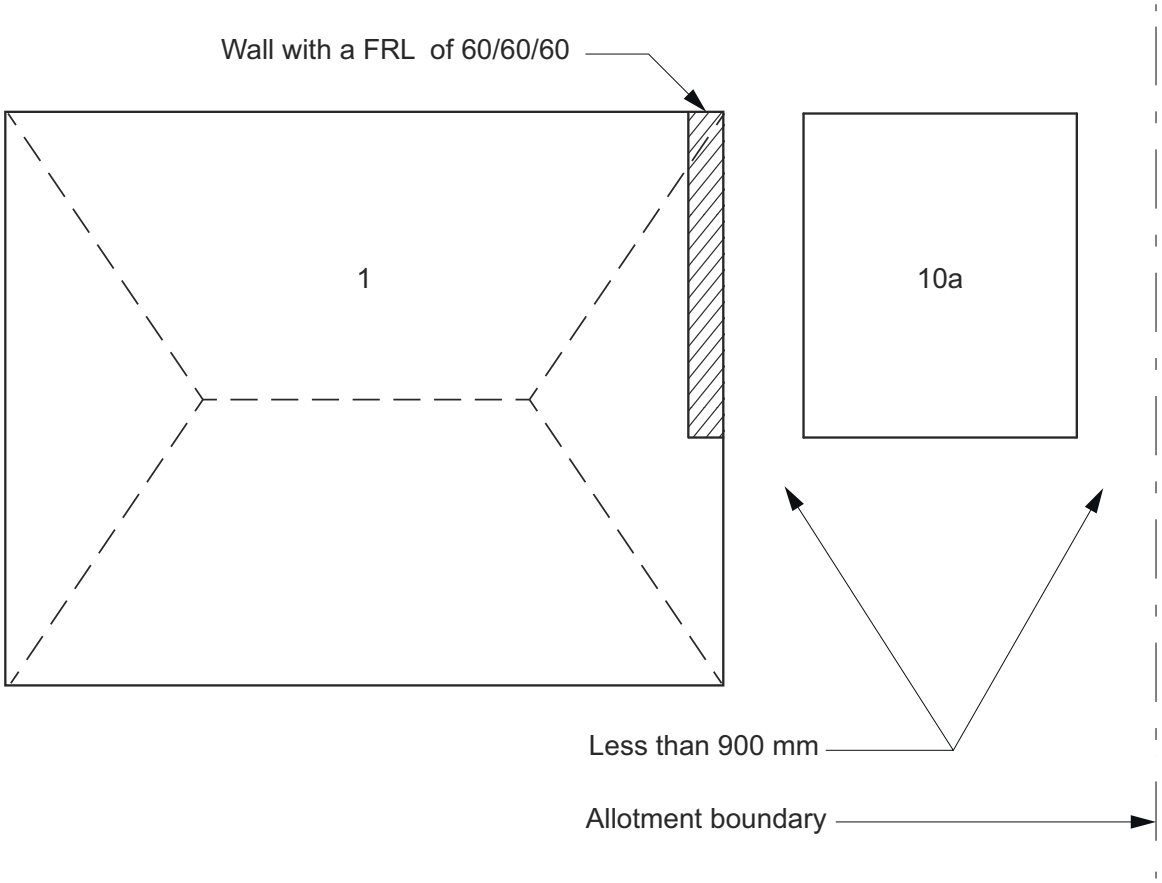

Figure 9.2.5f: External wall of adjacent Class 10a building with FRL (method 1)

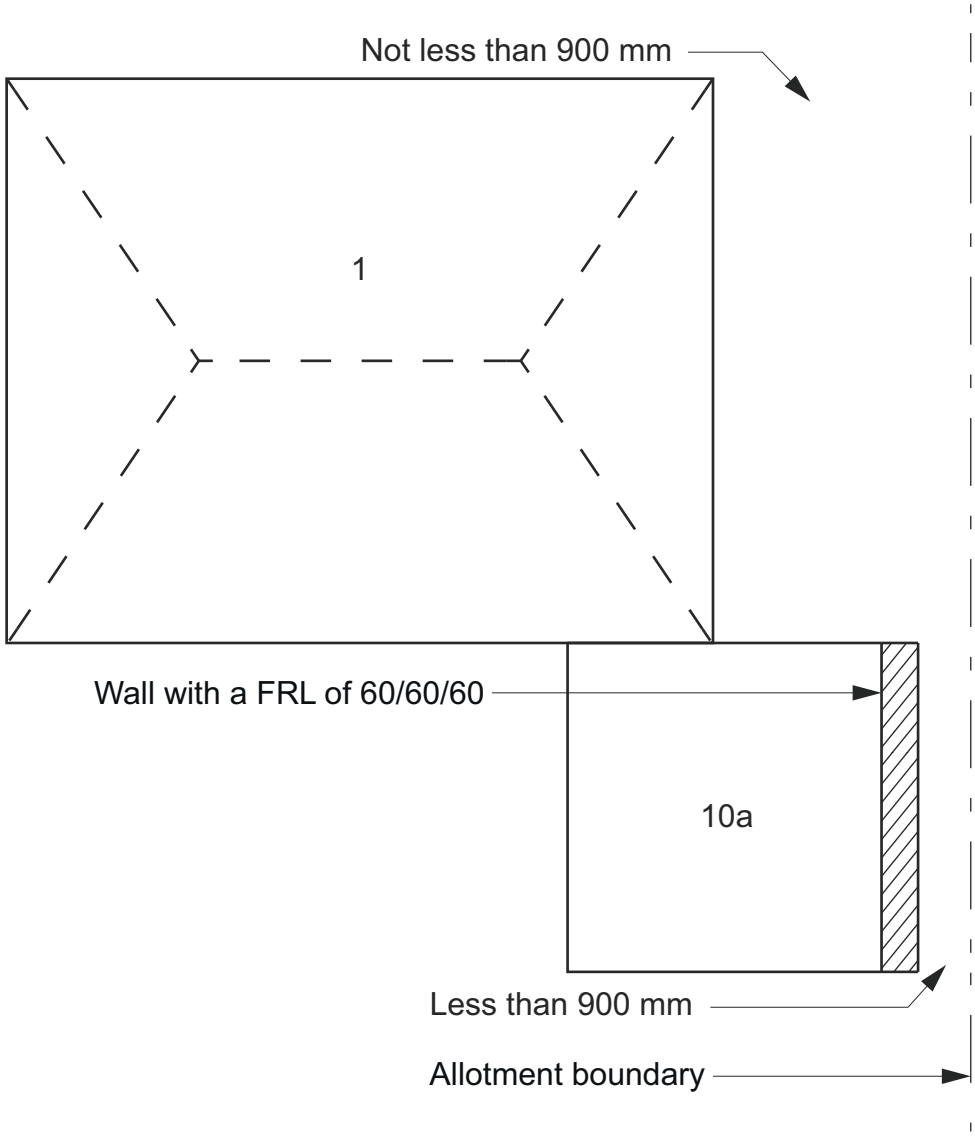

Figure 9.2.5g: External wall of adjacent Class 10a building with FRL (method 2)

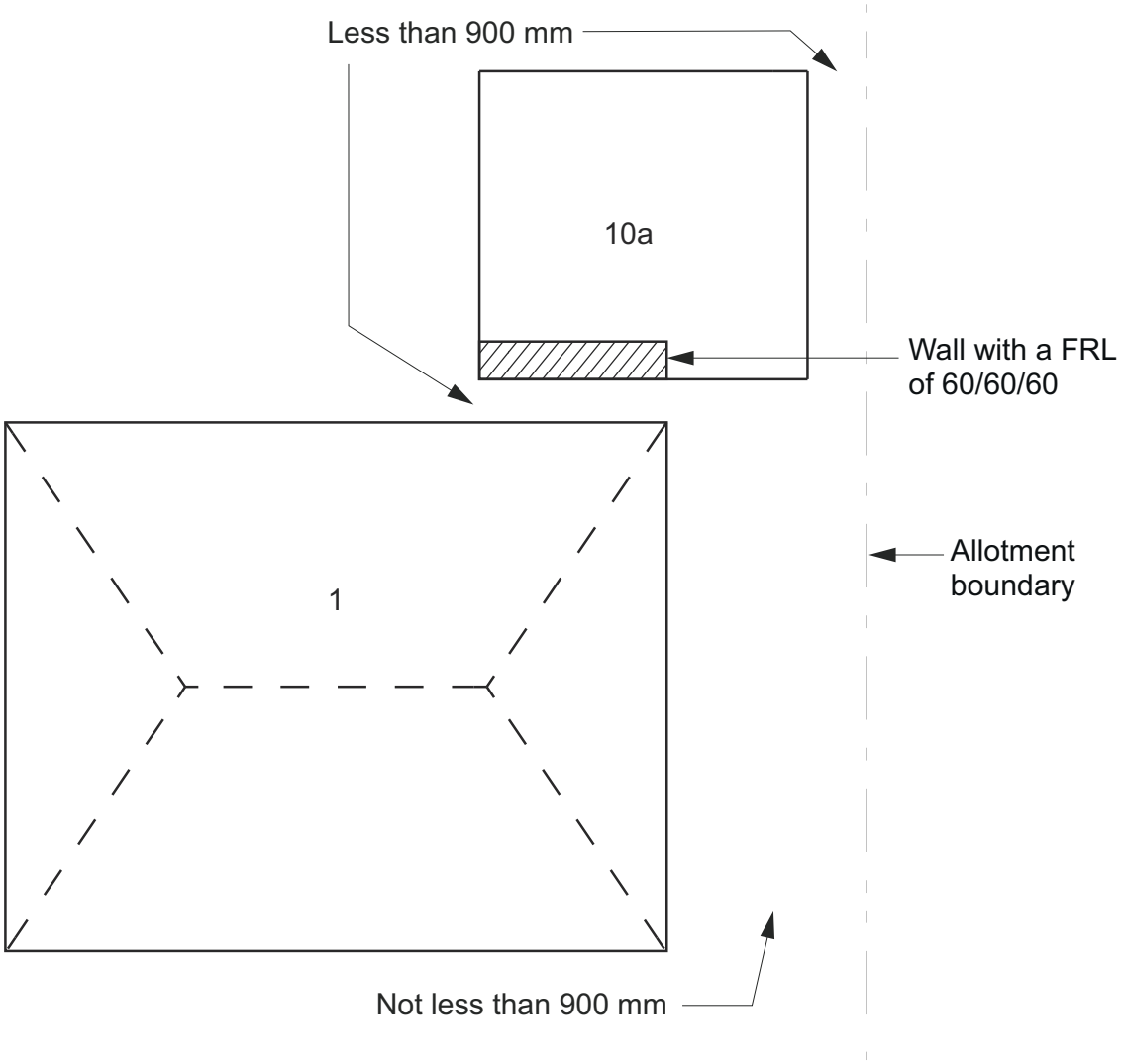

Figure 9.2.5h: Class 1 building with FRL to external wall

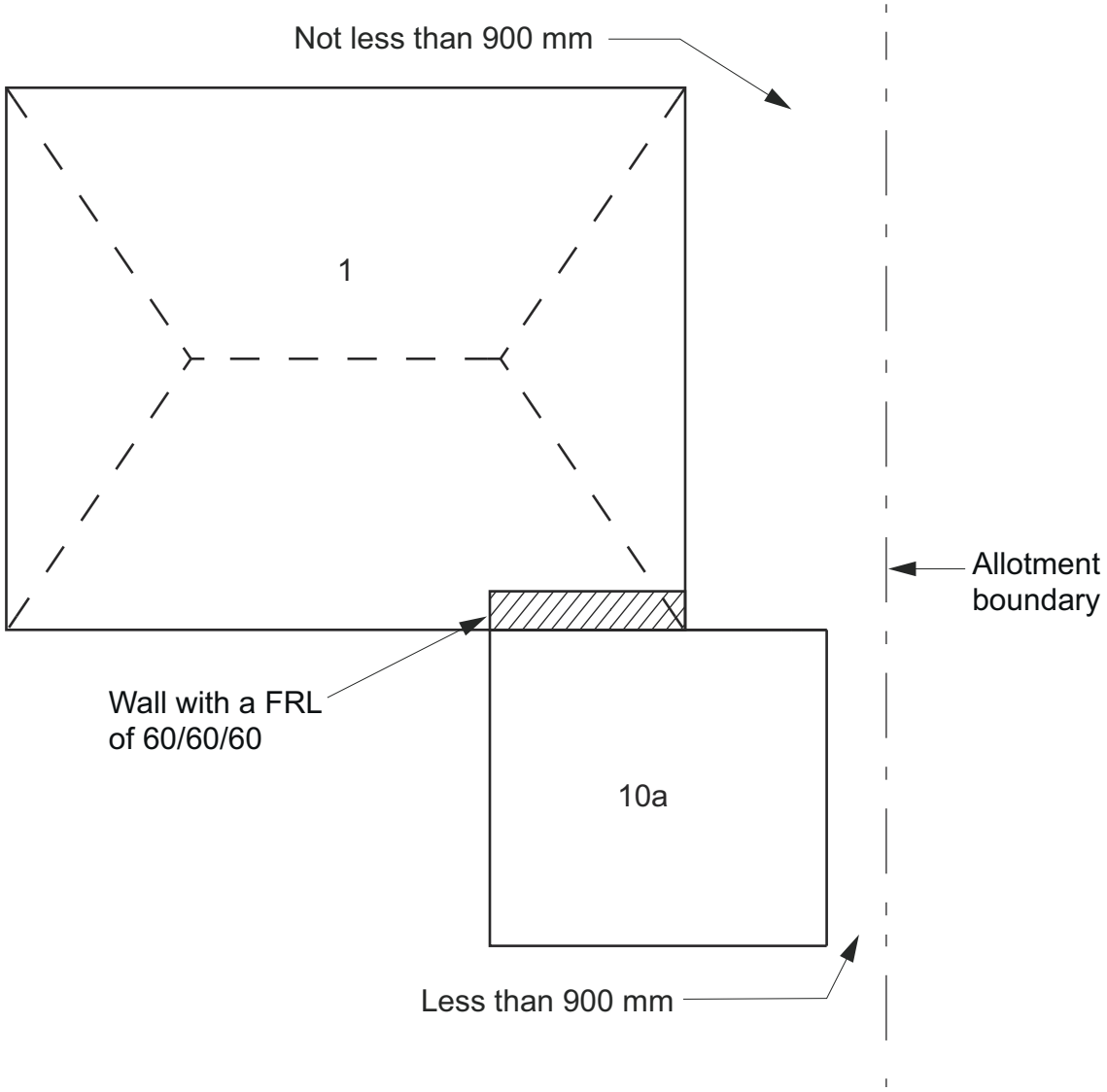

Figure 9.2.5i: External wall to Class 10 building with FRL

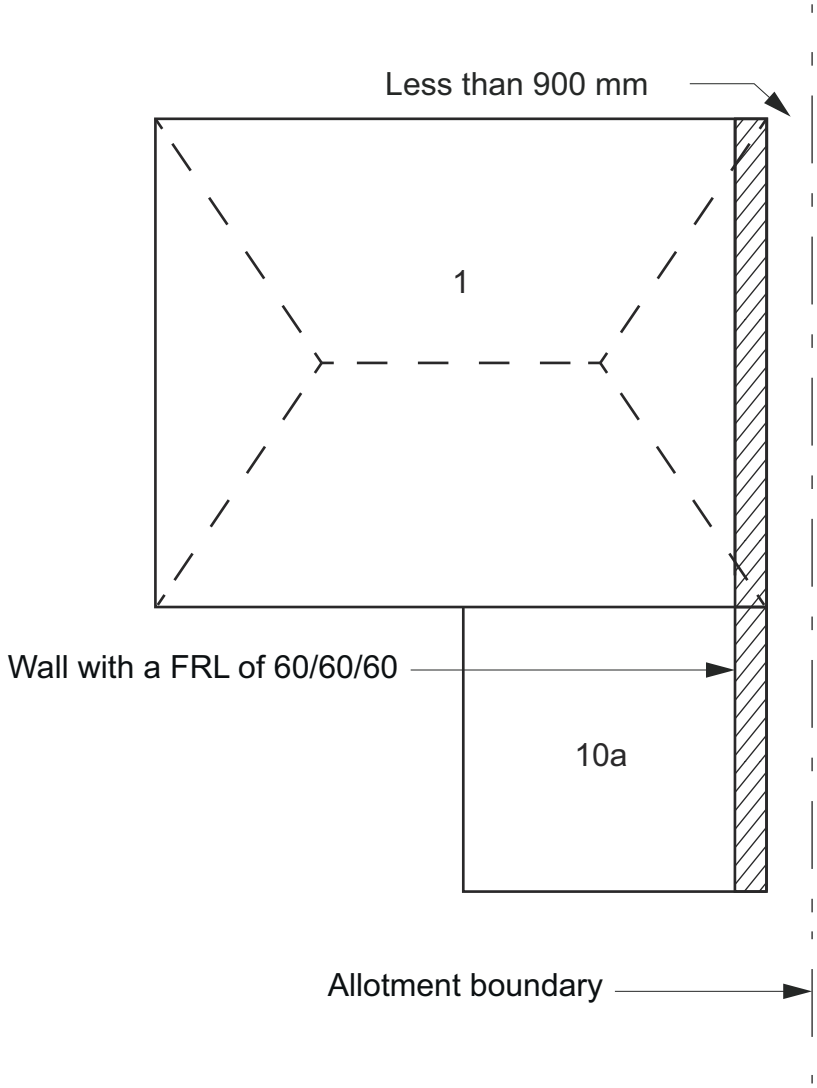

9.2.6 Protection of Class 1 buildings—Class 10a between Class 1 and other buildings on allotment

[2019: Figure 3.7.2.5]

The following methods are acceptable for the protection of a Class 1 building where a Class 10a building is located between or adjacent to a Class 1 building it is associated with and another building on the same allotment:

(a) The Class 10a building is not less than 1.8 m from the other building, as shown in Figure 9.2.6a.

(b) An *external wall* of the Class 10a building, which is less than 1.8 m from the other building, complies with 9.2.3, as shown in Figure 9.2.6b.

(c) An *external wall* of the Class 10a building, which is less than 1.8 m from the Class 1 building, complies with 9.2.3, as shown in Figure 9.2.6c.

(d) The Class 1 building is not less than 1.8 m from the Class 10a building, as shown in Figure 9.2.6d.

(e) An *external wall* of the Class 1 building, which is less than 1.8 m from the Class 10a building, complies with 9.2.3, as shown in Figure 9.2.6e.

(f) An *external wall* of the Class 10a building, which is less than 1.8 m from the *external wall* of the other building, complies with 9.2.3, as shown in Figure 9.2.6f.

(g) An *external wall* of the Class 10a building, which is less than 1.8 m from the *external wall* of the Class 1 building, complies with 9.2.3, as shown in Figure 9.2.6g.

(h) An *external wall* of the Class 1 and 10a building, which is less than 1.8 m from the *external wall* of the other building, complies with 9.2.3, as shown in Figure 9.2.6h.

Figure 9.2.6a: Class 10a building 1.8 m from other building on allotment

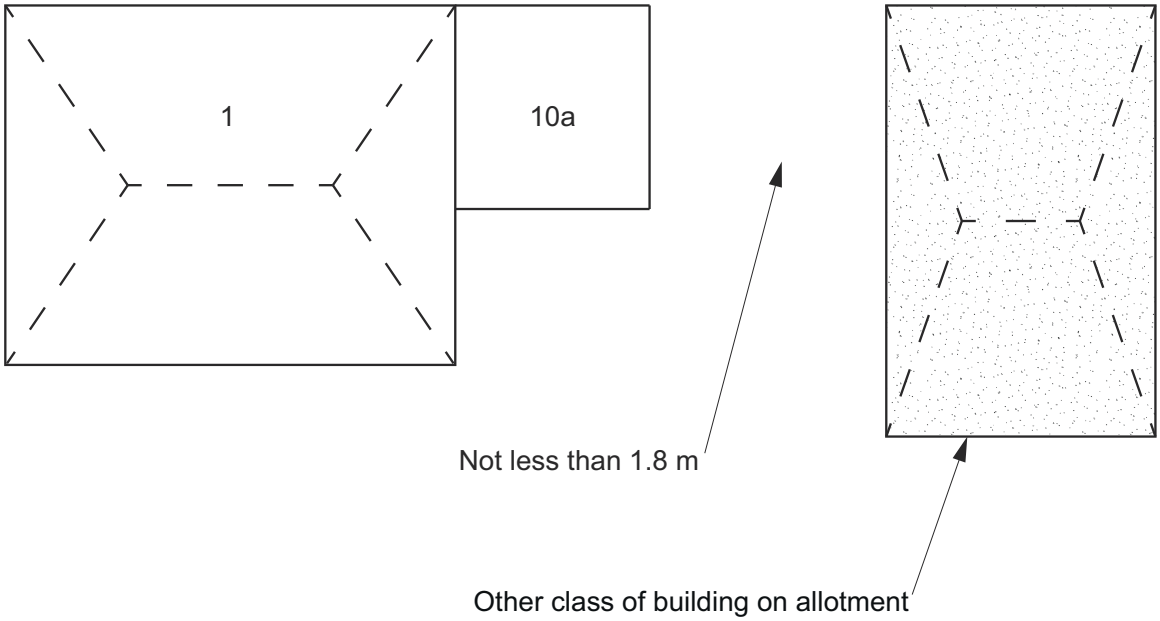

Figure 9.2.6b: External wall to Class 10a building with FRL (method 1)

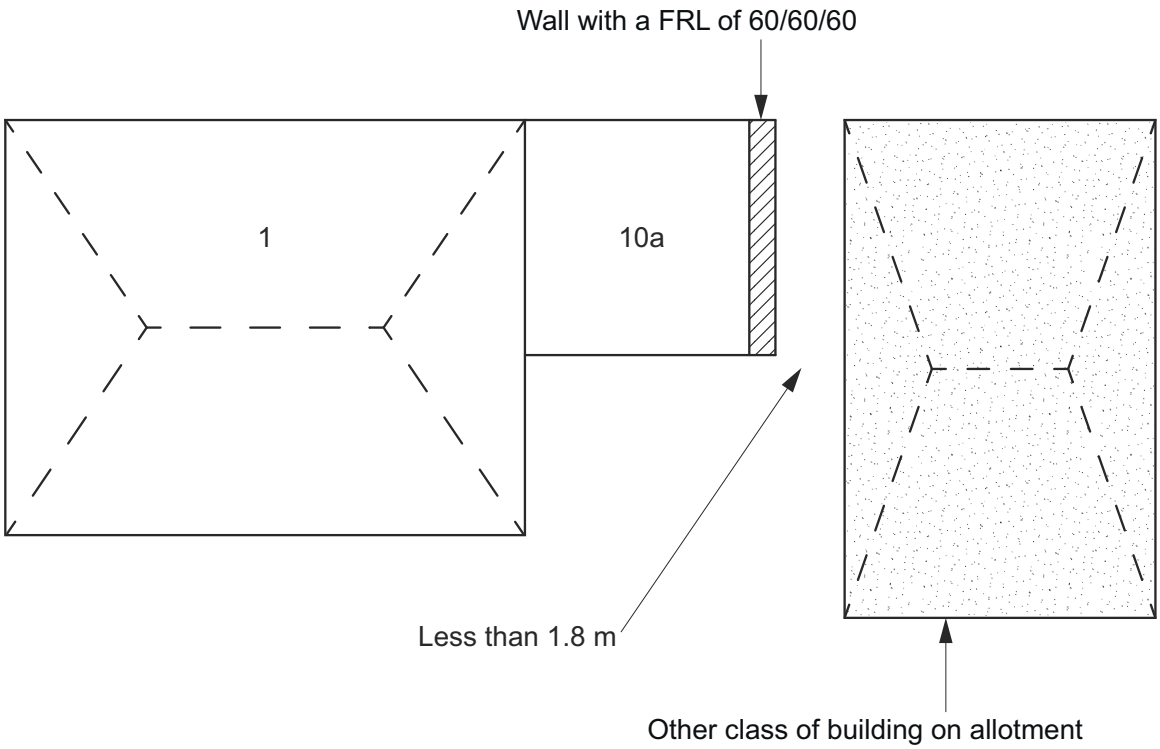

Figure 9.2.6c: External wall to Class 10a building with FRL (method 2)

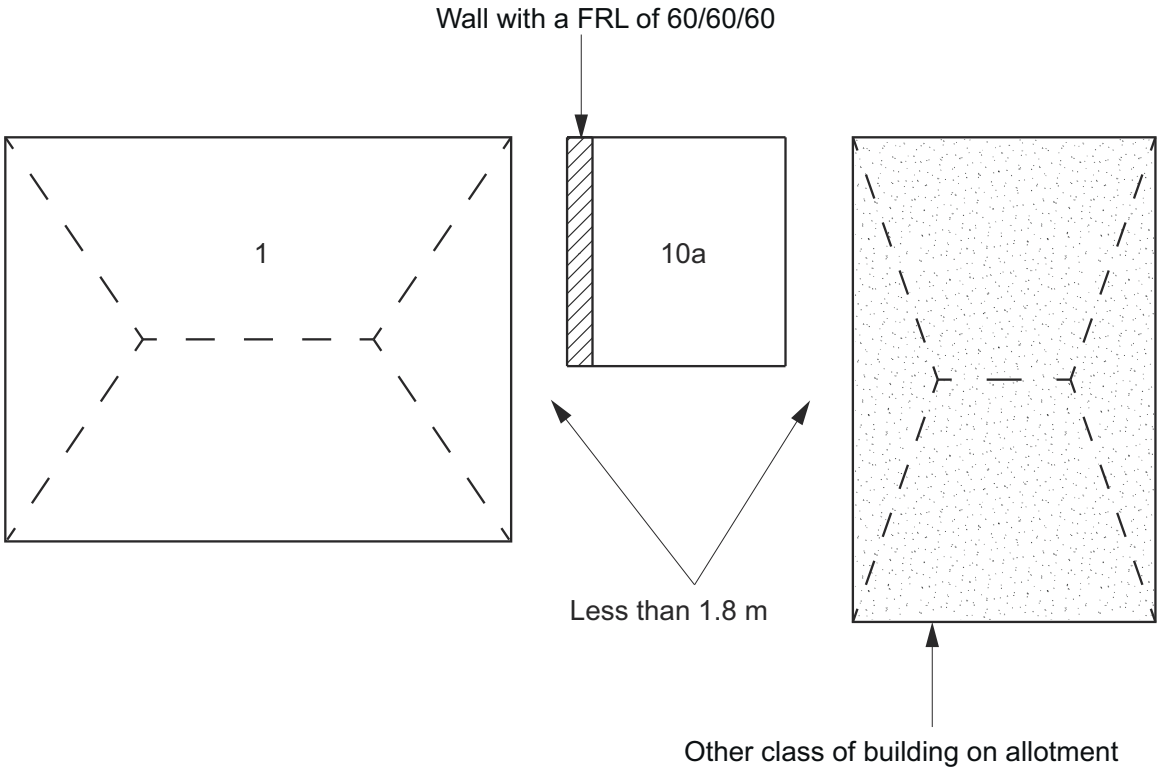

Figure 9.2.6d: 1.8 m separation between Class 1 and 10a

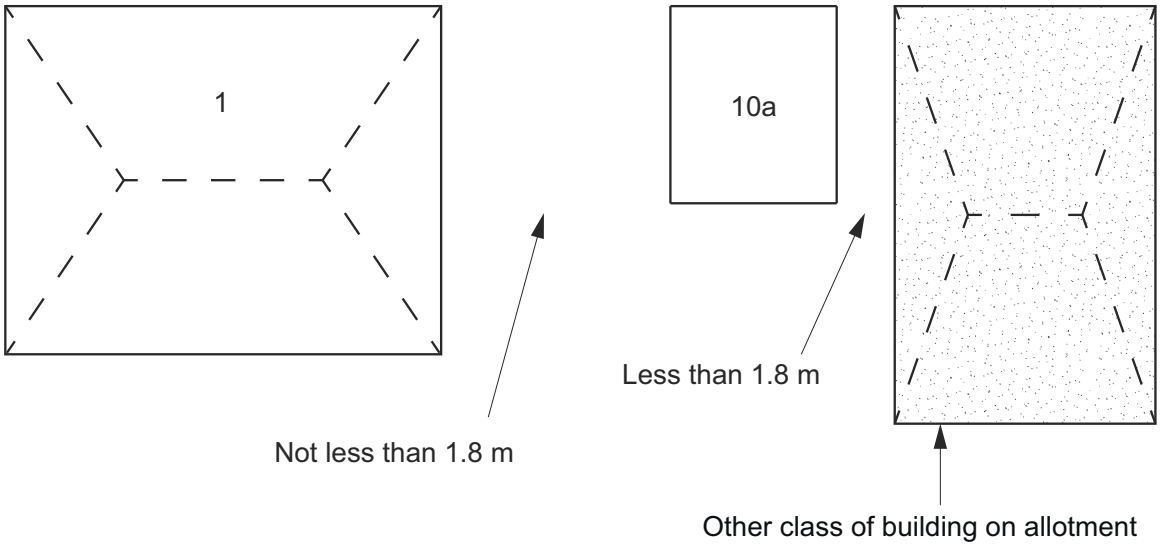

Figure 9.2.6e: Class 1 building with FRL to external wall

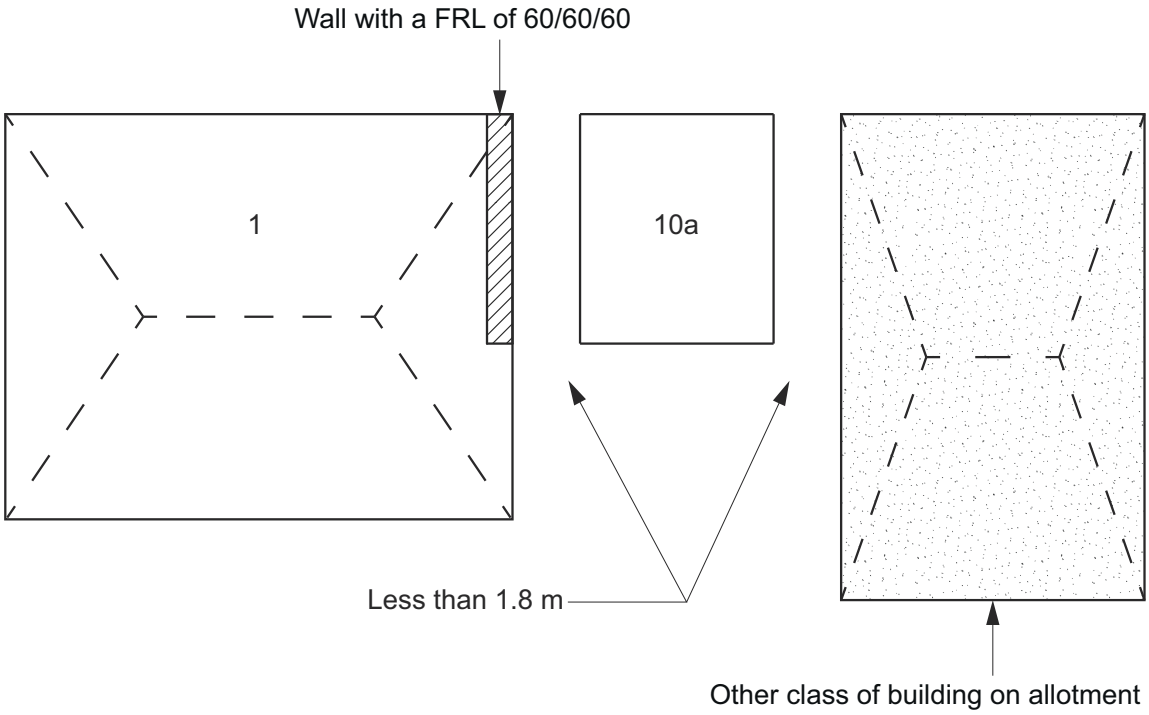

Figure 9.2.6f: External wall of adjacent Class 10a building with FRL (method 1)

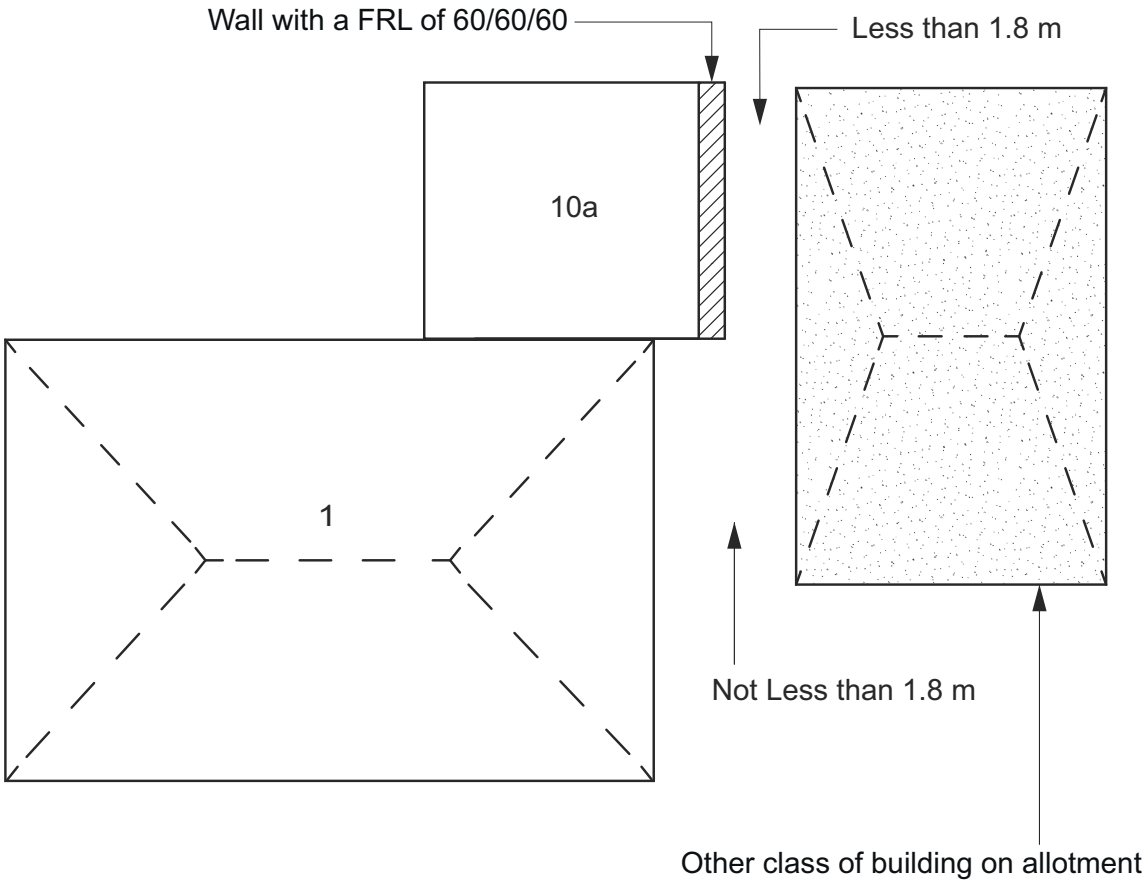

Figure 9.2.6g: External wall of adjacent Class 10a building with FRL (method 2)

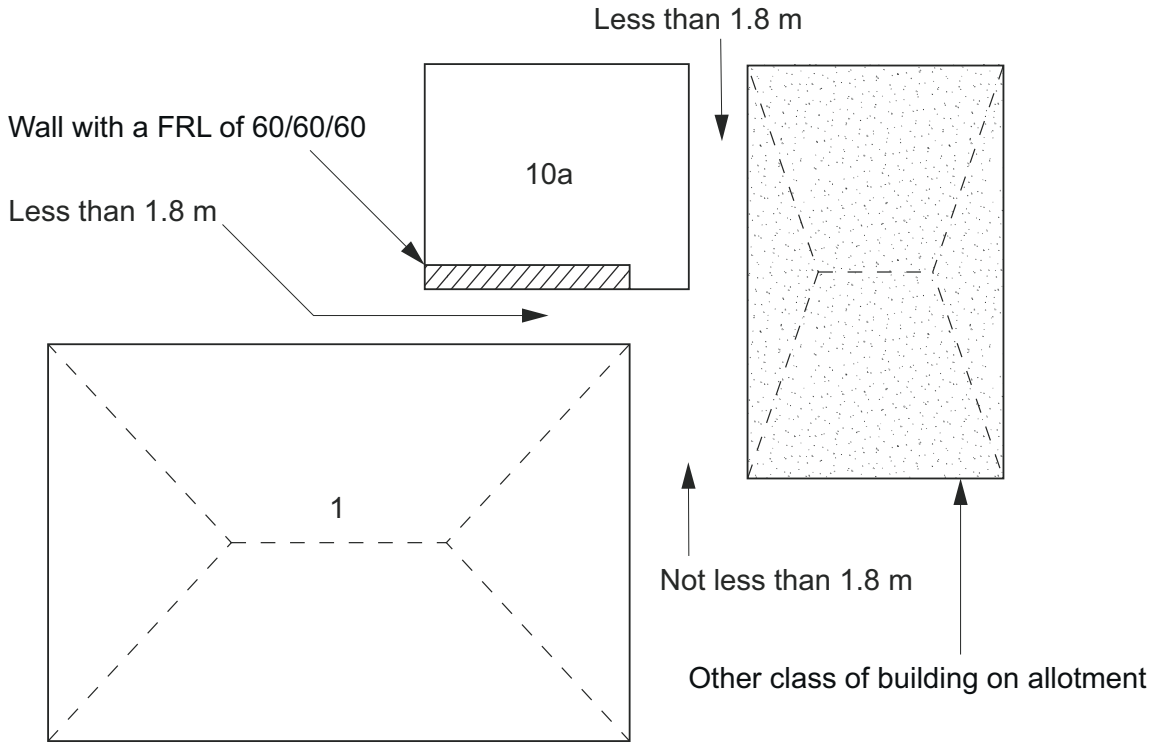

Figure 9.2.6h: Class 1 and 10 building with FRL to external wall

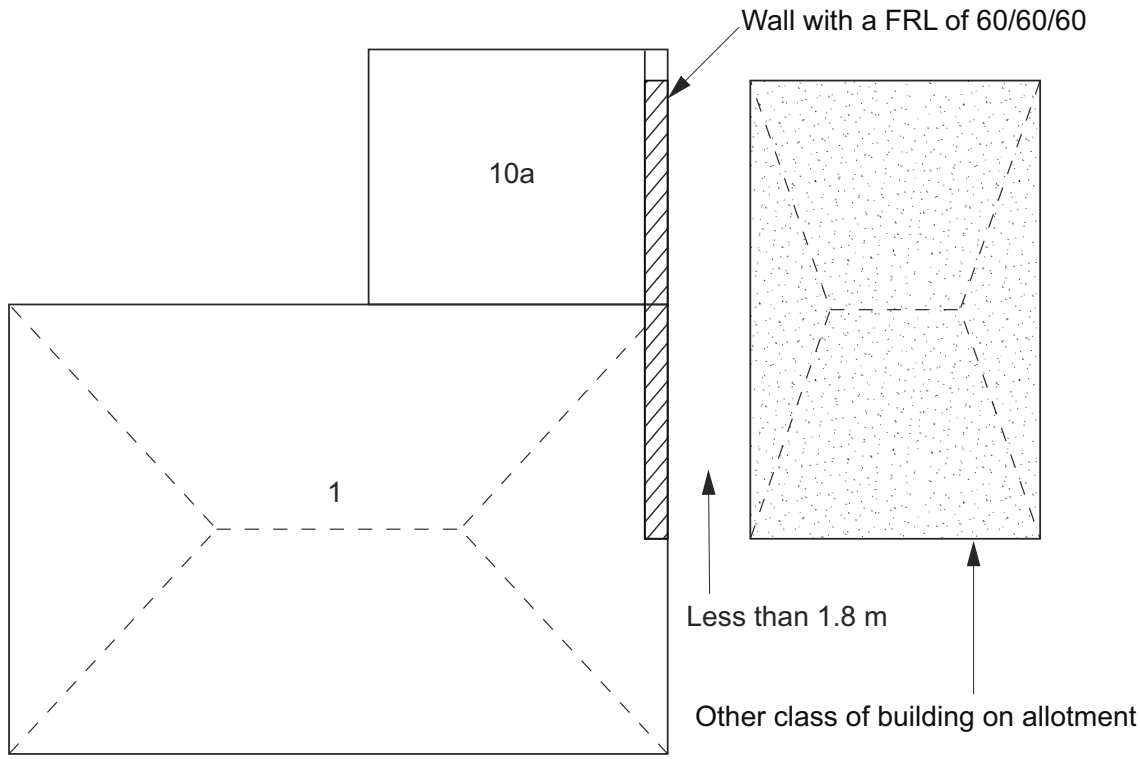

9.2.7 Protection of Class 1 buildings—separation of Class 10a buildings on an allotment

[2019: Figure 3.7.2.6]

The following methods are acceptable for the protection of a Class 1 building where two or more Class 10a buildings on the same allotment are located between and are associated with different Class 1 buildings:

(a) Each Class 10a building must be separated from each other by a distance of not less than 1.8 m, as shown in

Figure 9.2.7a.

(b) Each Class 10a building must be separated from each other by *external walls* complying with 9.2.3, as shown in Figure 9.2.7b.

(c) Each Class 10a building must be separated from each Class 1 building by a distance of not less than 900 mm, as shown in Figure 9.2.7c.

(d) Each Class 10a building must be separated from each Class 1 building by *external walls* complying with 9.2.3, as shown in Figure 9.2.7d.

(e) Each Class 10a building must be separated by a wall complying with 9.3.1, as shown in Figure 9.2.7e.

(f) Each Class 10a building must be separated from each other by *external walls* complying with 9.2.3, as shown in Figure 9.2.7f.

(g) Each Class 10a building must be separated from each Class 1 building by *external walls* complying with 9.2.3, as shown in Figure 9.2.7g.

(h) Each Class 10a building must be separated by a wall complying with 9.3.1, as shown in Figure 9.2.7h.

Figure 9.2.7a: 1.8m separation between Class 10a buildings

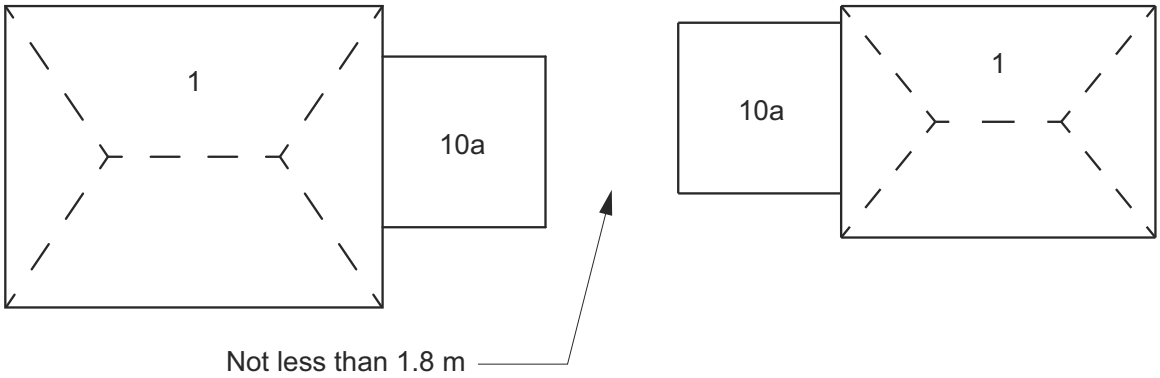

Figure 9.2.7b: External wall to Class 10a building with FRL (method 1)

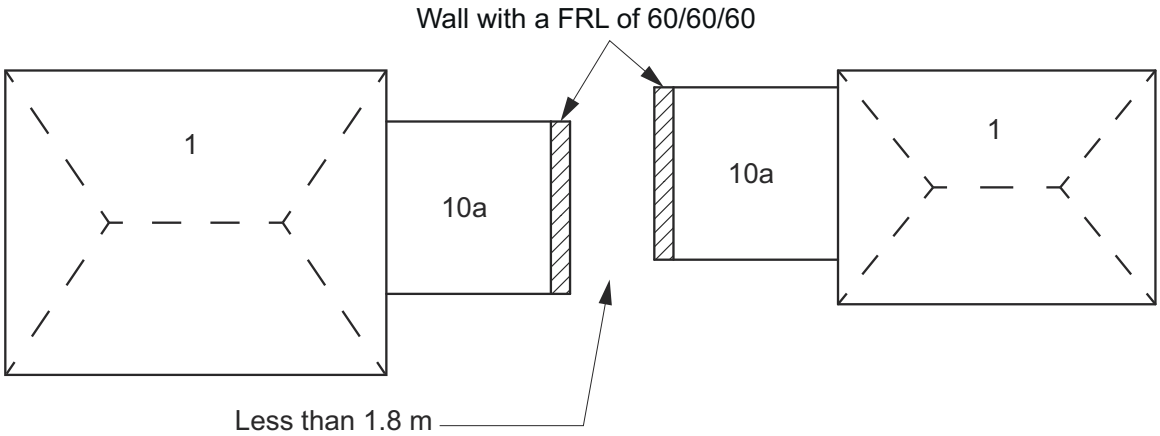

Figure 9.2.7c: 900 mm separation between Class 10a and Class 1 buildings

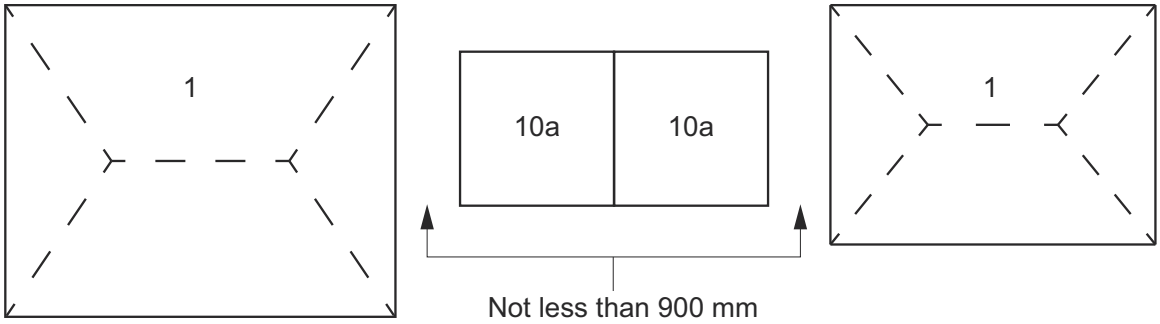

Figure 9.2.7d: External wall to a Class 10a buildings with FRL (method 2)

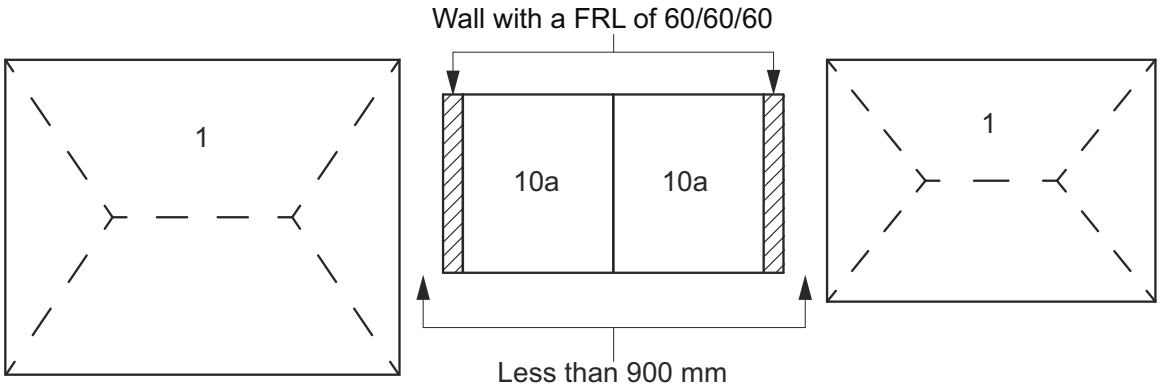

Figure 9.2.7e: Class 10a buildings with FRL to separating wall (method 1)

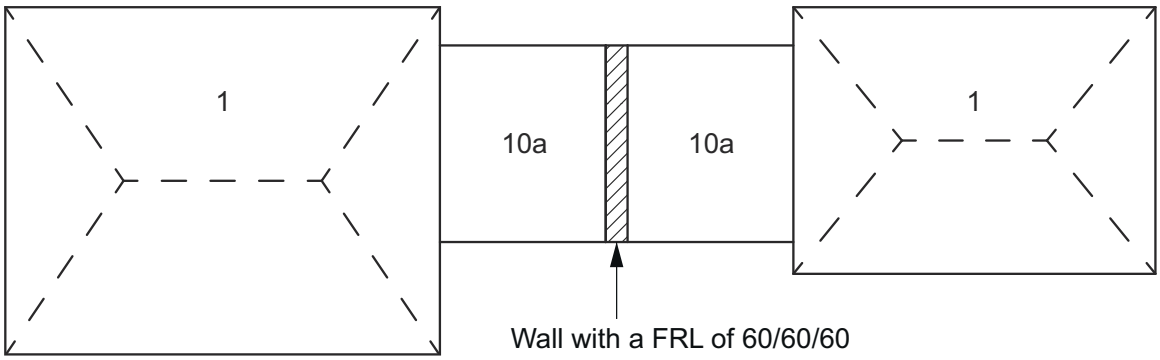

Figure 9.2.7f: External wall to adjacent Class 10a buildings with FRL (method 1)

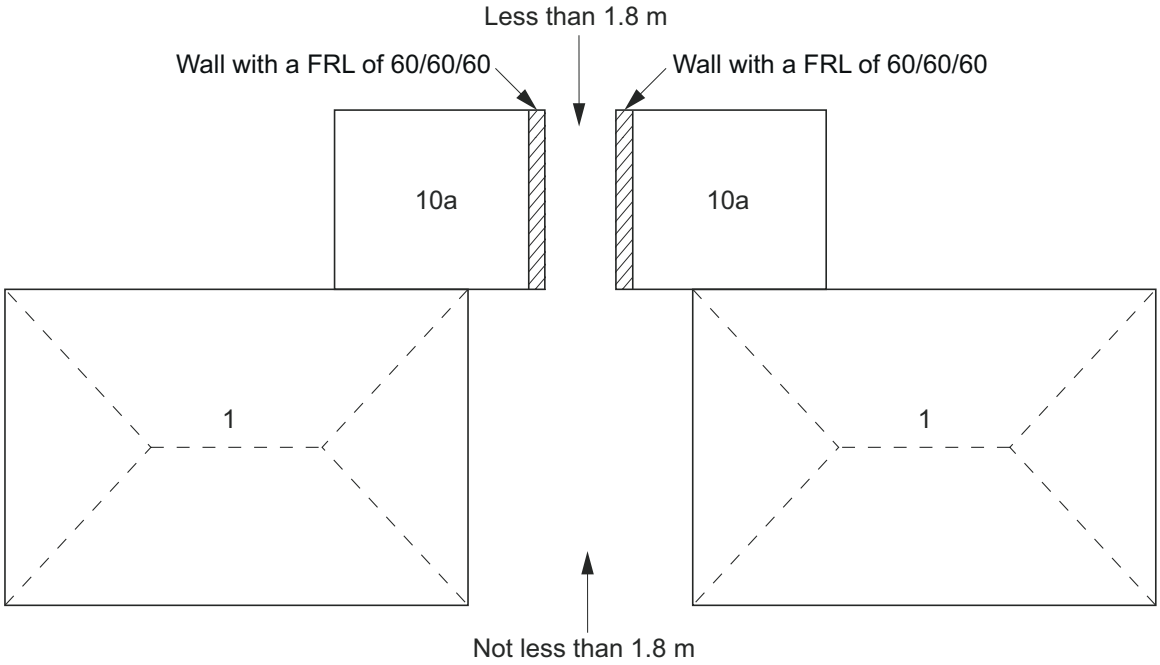

Figure 9.2.7g: External wall to adjacent Class 10a buildings with FRL (method 2)

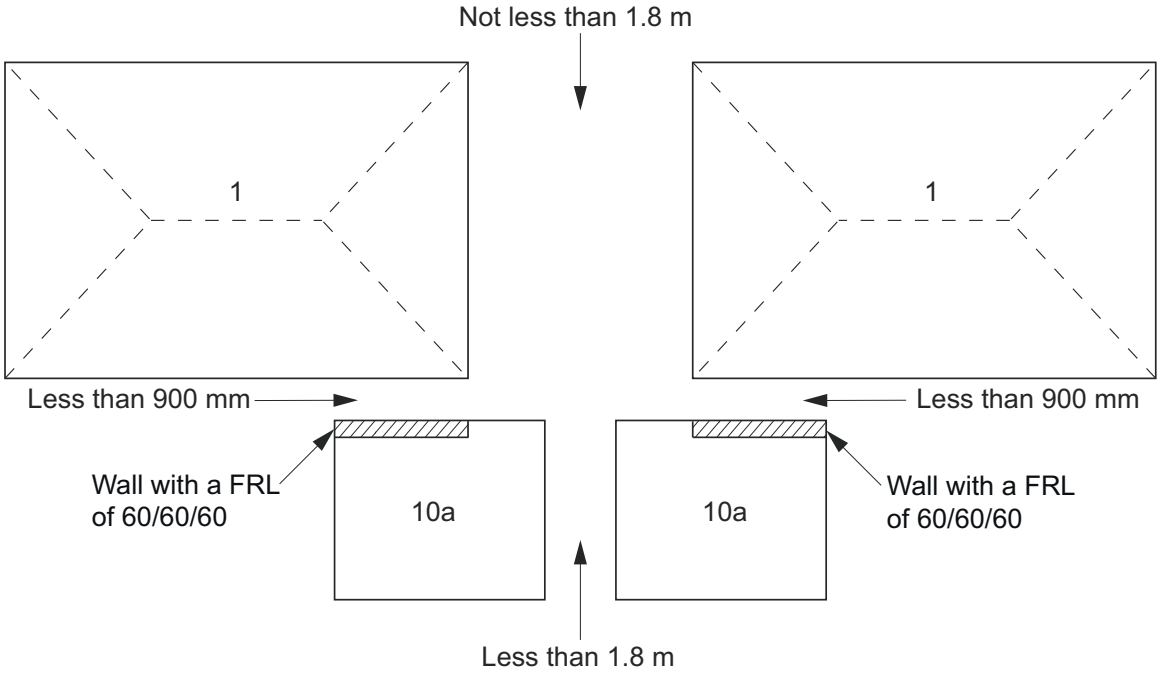

Figure 9.2.7h: Class 10a buildings with FRL to separating wall (method 2)

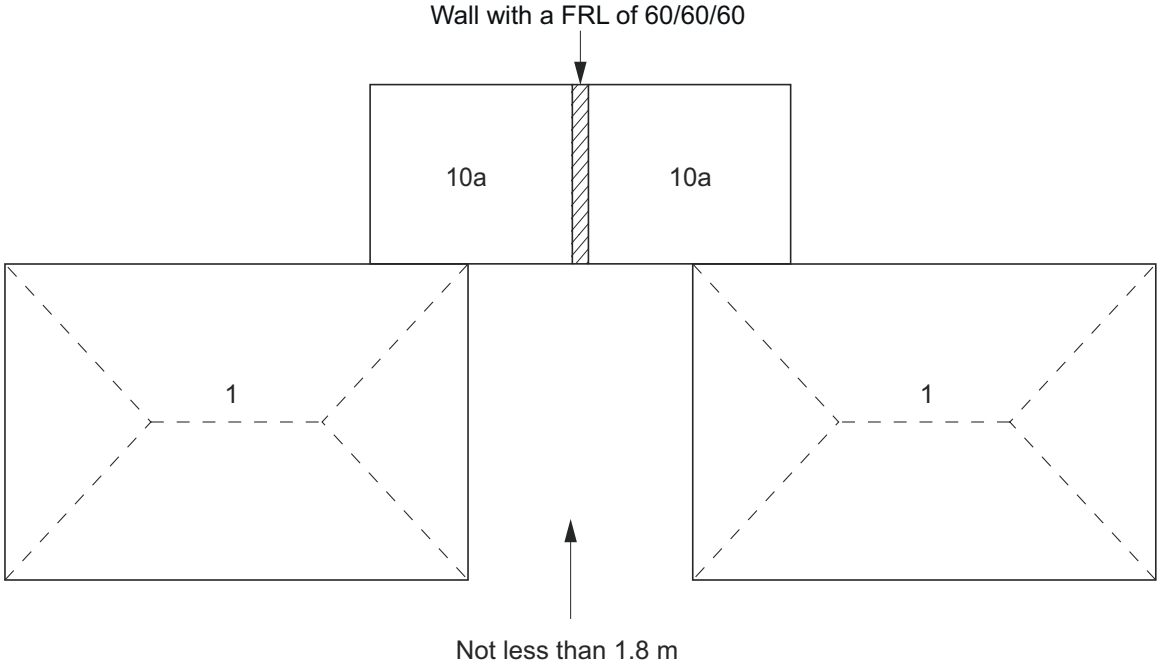

SA 9.2.8

9.2.8 Open carports

[2019: 3.7.2.6]

A Class 10a carport is exempt from complying with 9.2.4(1) if—

(a) it has two or more sides open and not less than one third of its perimeter open; and

(b) for the purposes of (a), a side is considered to be open if the roof covering adjacent to that side is not less than 500 mm from another building or allotment boundary; and

(c) it has a polycarbonate or *non-combustible* roof covering; and

(d) any ceiling lining and wall cladding, including gables, is *non-combustible* (see Figure 9.2.8a); and

(e) it does not provide direct vertical support to any part of the Class 1 building; and

(f) in the case where it has a common roof structure with the Class 1 building and the carport does not have a ceiling (See Figure 9.2.8b), the opening between the top of the wall of the Class 1 building and the underside of the roof covering is infilled with—

(i) a *non-combustible* material; or

(ii) construction clad with *non-combustible* material on the carport side.

Figure 9.2.8a: Identifying an open carport

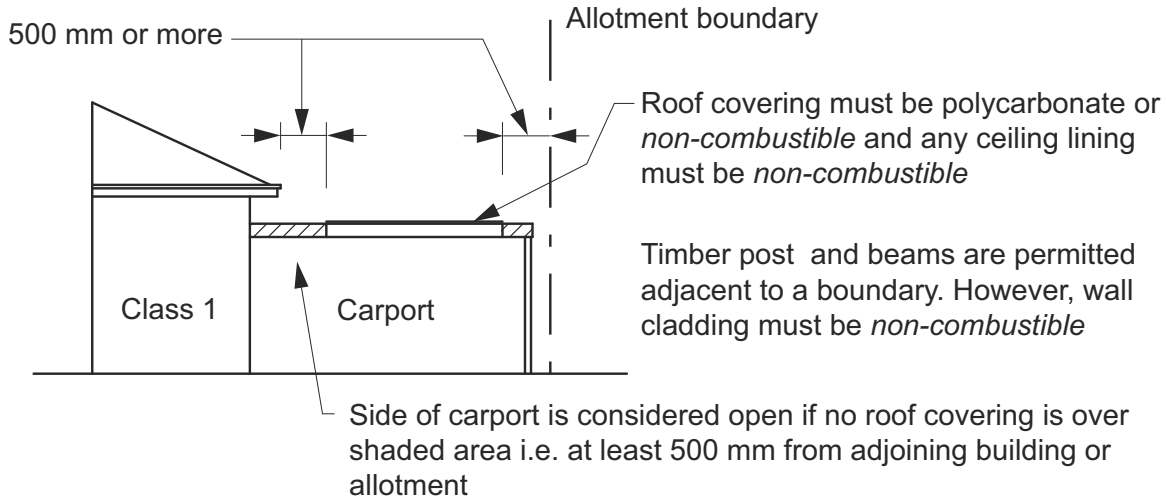

(a) Example A

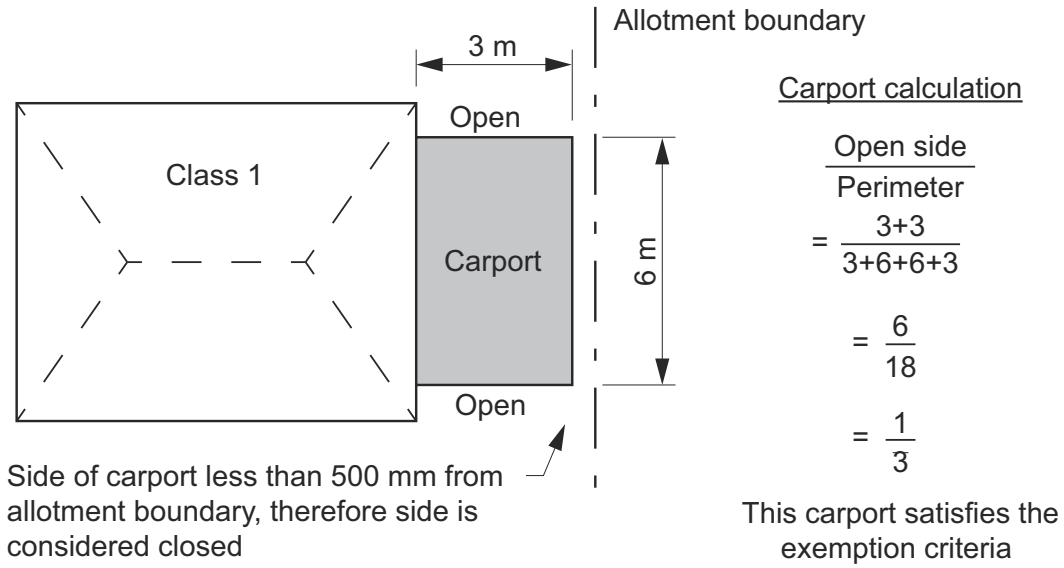

(b) Example B

Figure 9.2.8b: Requirements for non-combustible infill panels to carport

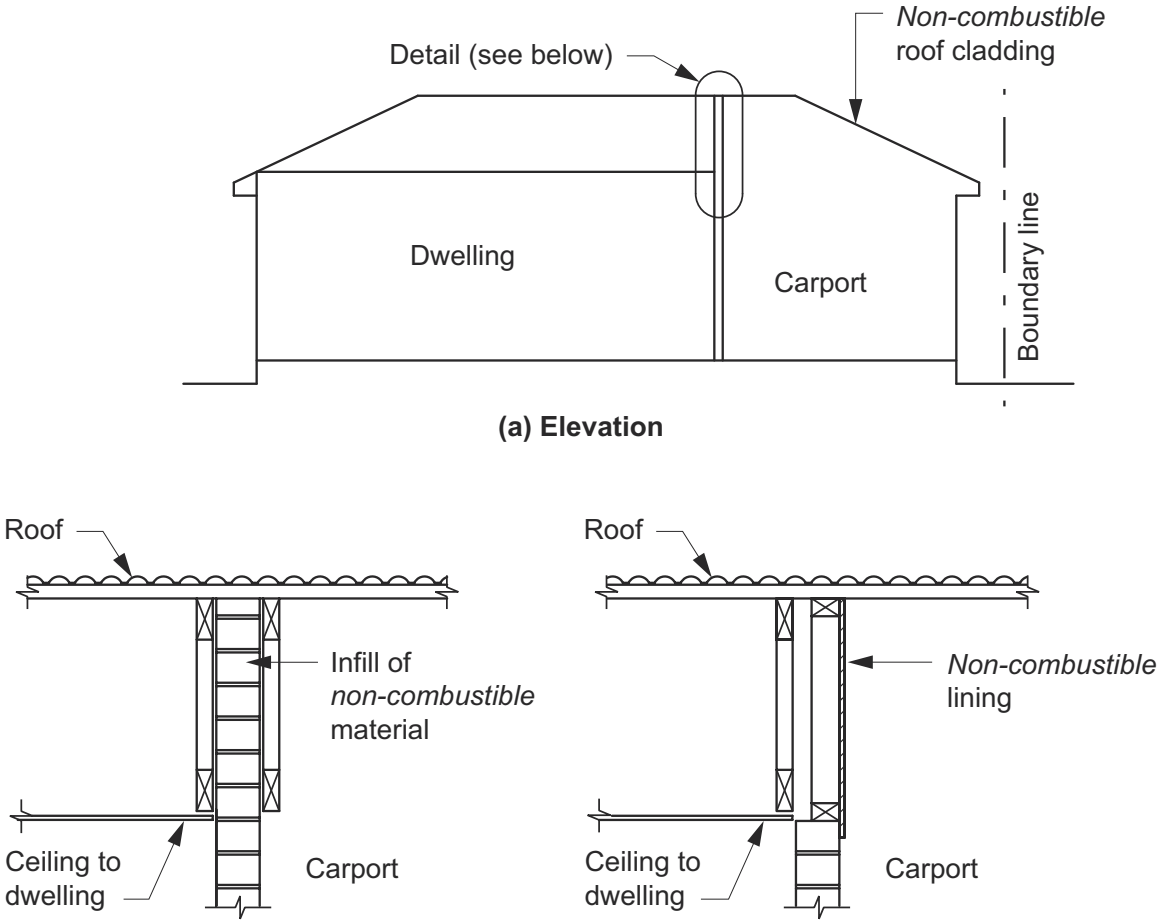

Explanatory Information

A side of a carport enclosed by a vehicle access door is not considered to be an open side.

SA 9.2.9

9.2.9 Allowable encroachments

[2019: 3.7.2.7]

(1) An encroachment is any construction—

(a) between the *external wall* of the building and the allotment boundary other than a boundary adjoining a road or other public space; or

(b) between the *external walls* of two buildings on the same allotment; or

(c) between the *external wall* of the building and the vertical projection of the *external wall* of another building on the same allotment; or

(d) that extends beyond the vertical projection of another building on the same allotment other than a building it is associated with.

(2) For the purposes of (1), an encroachment relates to any *external wall* of—

(a) a Class 10a building *required* to comply with 9.2.4; or

(b) a Class 1 building.

(3) Encroachments allowed within 900 mm of an allotment boundary or within 1.8 m of another building, or its vertical projection, on the same allotment are—

(a) *non-combustible* fascias, gutters and downpipes; and

(b) light fittings, electricity or gas meters, aerials or antennas; and

(c) pergolas, sun blinds or water tanks (see Figure 9.2.9a); and

(d) unroofed terraces, landings, steps and ramps, not more than 1 m in height.

(4) Encroachments allowed up to but not closer than 450 mm from an allotment boundary or up to but not closer than 900 mm from another building, or its vertical projection, on the same allotment or associated encroachments of another building on the same allotment are—

(a) *combustible* fascias, gutters and downpipes (see Figure 9.2.9a, Figure 9.2.9b and Figure 9.2.9c); and

(b) eaves with *non-combustible* roof cladding and *non-combustible* lining; and

(c) flues, chimneys, pipes, domestic fuel tanks, cooling or heating appliances or other services.

(5) Encroachments allowed to project beyond the vertical projection of another building on the same allotment are *non-combustible* fascias, gutters and downpipes (see Figure 9.2.3b).

Figure 9.2.9a: Allowable encroachments for non-combustible construction — Combustible fascia up to but not closer than 450 mm to an allotment boundary

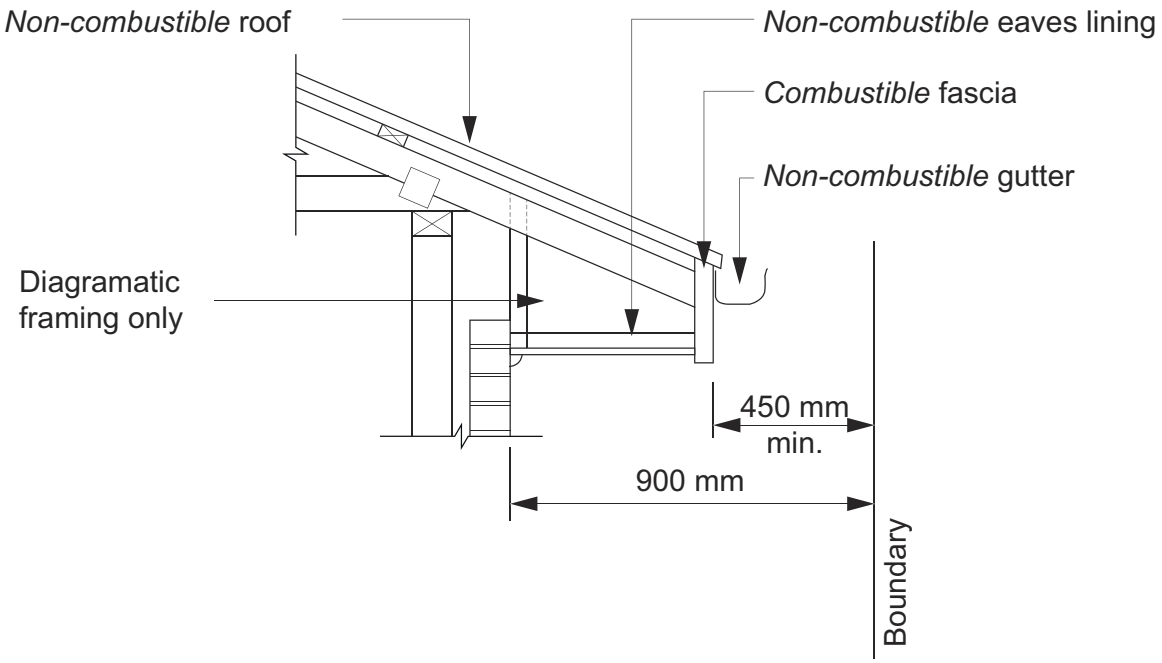

Figure 9.2.9b: Allowable encroachments for non-combustible construction — Non-combustible fascia and gutter within 900 mm of an allotment boundary

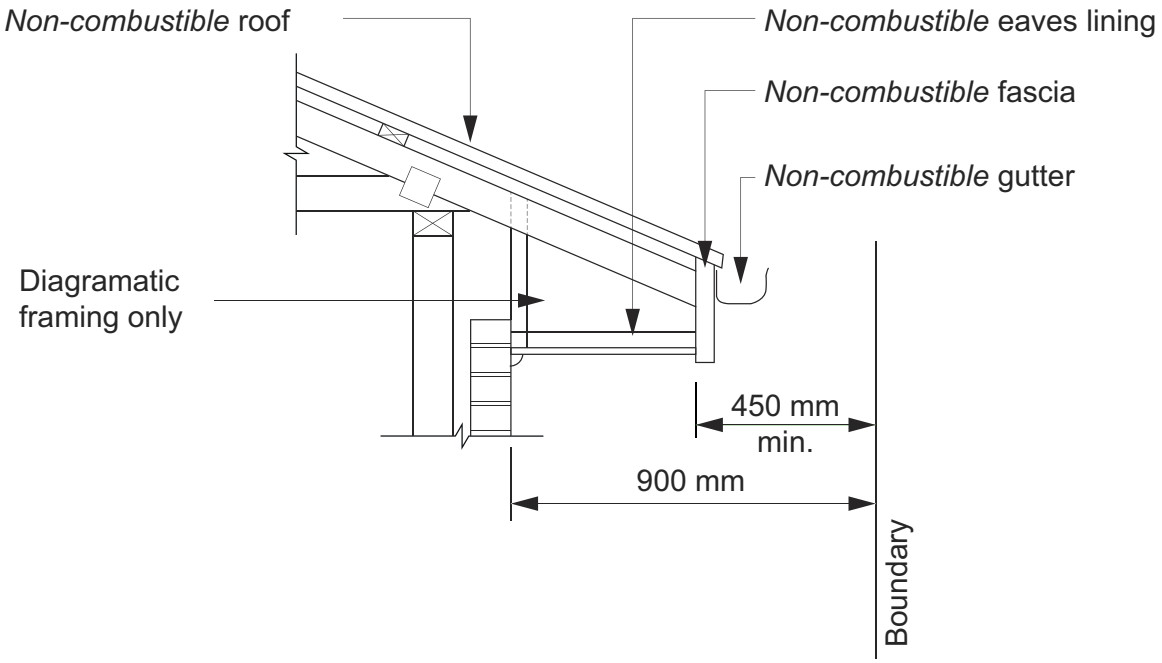

Figure 9.2.9c: Allowable encroachments for non-combustible construction — Unroofed pergola within 900 mm of an allotment boundary

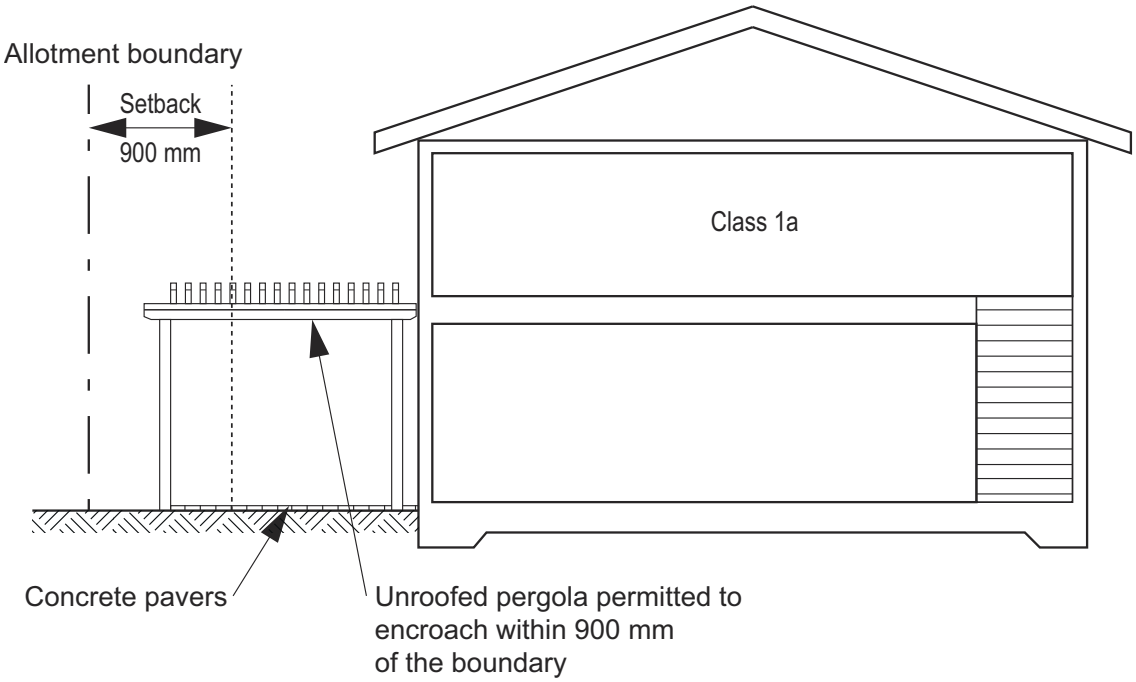

Explanatory Information

A deck is not considered an unroofed terrace and is therefore not permitted as an allowable encroachment under 9.2.9 whether *combustible* or not.

The term 'pergola' is a reference to an unroofed structure.

Explanatory Figure 9.2.9 depicts encroachment of a building on the same allotment, but which is not associated with the building onto which it encroaches.

Figure 9.2.9 (explanatory): Encroachment of a building that is not associated on the same allotment

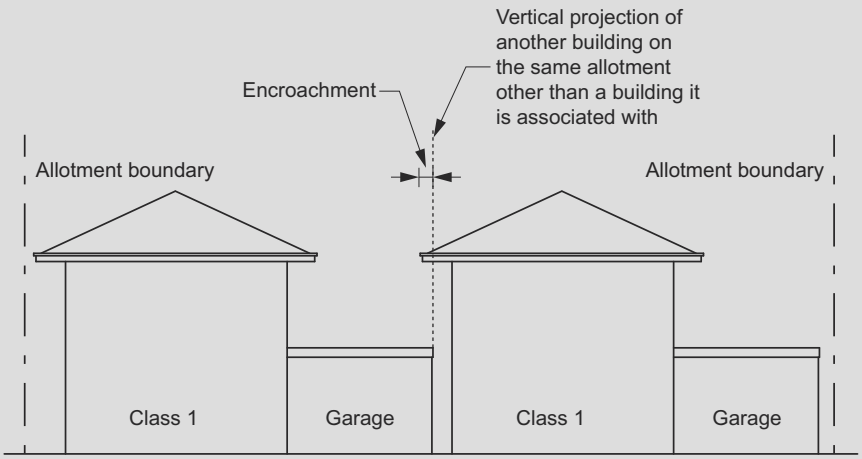

9.2.10 Roof lights

[2019: 3.7.2.8]

Combustible roof lights, skylights or the like installed in a roof or part of a roof *required* to have a *non-combustible* covering must—

(a) have an aggregate area not more than 20% of the roof or part of the roof; and

(b) be not less than—

(i) 900 mm from the allotment boundary other than the boundary adjoining a road alignment or other public space; and

(ii) 1.8 m from any roof light or the like in another building on the allotment other than an associated building or a detached part of the same building (see Figure 9.2.10).

Figure 9.2.10: Location of combustible roof lights

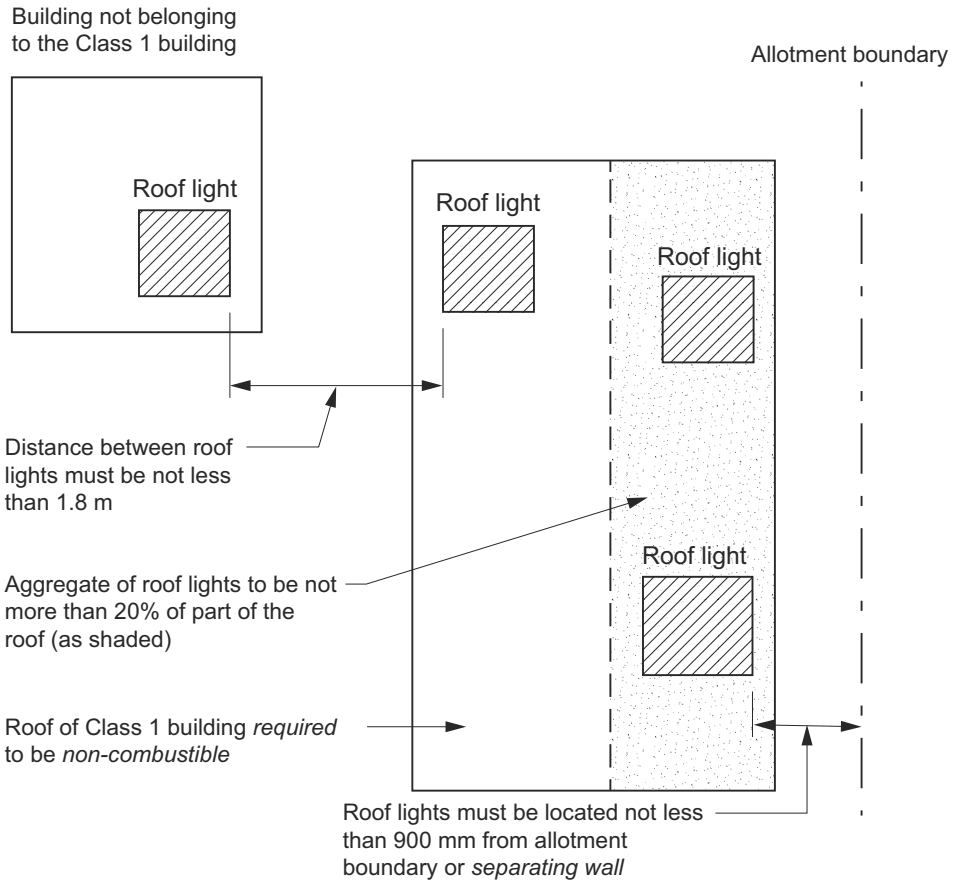

Figure Notes

Roof lights depicted in Figure 9.2.10 are *combustible*.

Part 9.3 Fire protection of separating walls and floors

9.3.1 Separating walls

[2019: 3.7.3.2]

(1) A *separating wall* between Class 1 buildings, or a wall that separates a Class 1 building from a Class 10a building which is not associated with the Class 1 building must—

(a) be constructed—

(i) having an FRL of not less than 60/60/60; or

(ii) of masonry not less than 90 mm thick; and

(b) commence at the footings or ground slab (see Figure 9.3.1a), except for horizontal projections to which 9.3.4 applies (see Figure 9.3.4); and

(c) extend—

(i) if the building has a *non-combustible* roof covering, to the underside of the roof covering (see Figure 9.3.1a and Figure 9.3.1b); or

(ii) if the building has a *combustible* roof covering, to not less than 450 mm above the roof covering (see Figure 9.3.1a); and

(d) comply with (2) to (5) and 9.3.2 as applicable.

(2) A *separating wall* of *lightweight construction* must be tested in accordance with Specification 6.

(3) A *separating wall* complying with (1)(c)(i)—

(a) must not be crossed by timber or other *combustible* building elements except for roof battens with dimensions of 75 x 50 mm or less, or roof sarking; and

(b) must have any gap between the top of the wall and the underside of the roof covering packed with mineral fibre or other suitable *fire-resisting* material.

(4) Where a building has a masonry veneer *external wall*, any gap between the *separating wall* and the external masonry veneer must be—

(a) not more than 50 mm; and

(b) packed with a mineral fibre or other suitable *fire-resisting* material with the packing arranged to maintain any weatherproofing requirements of H2D4.

(5) Eaves, verandahs and similar spaces that are open to the roof space and are common to more than one Class 1 dwelling must be separated by a *non-combustible* vertical lining (see Figure 9.3.1c).

Figure 9.3.1a: Separating wall construction

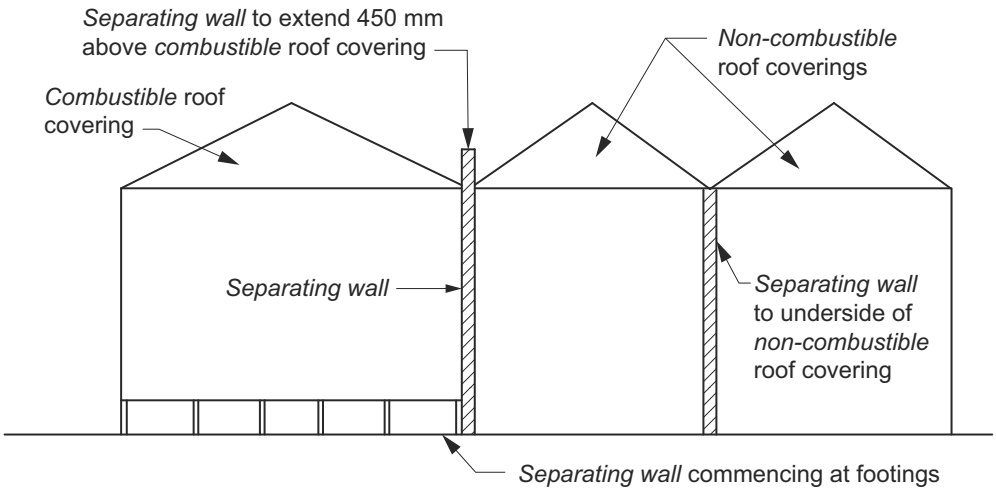

Figure 9.3.1b: Separating wall construction — Underside of non-combustible roof cladding (diagram 1)

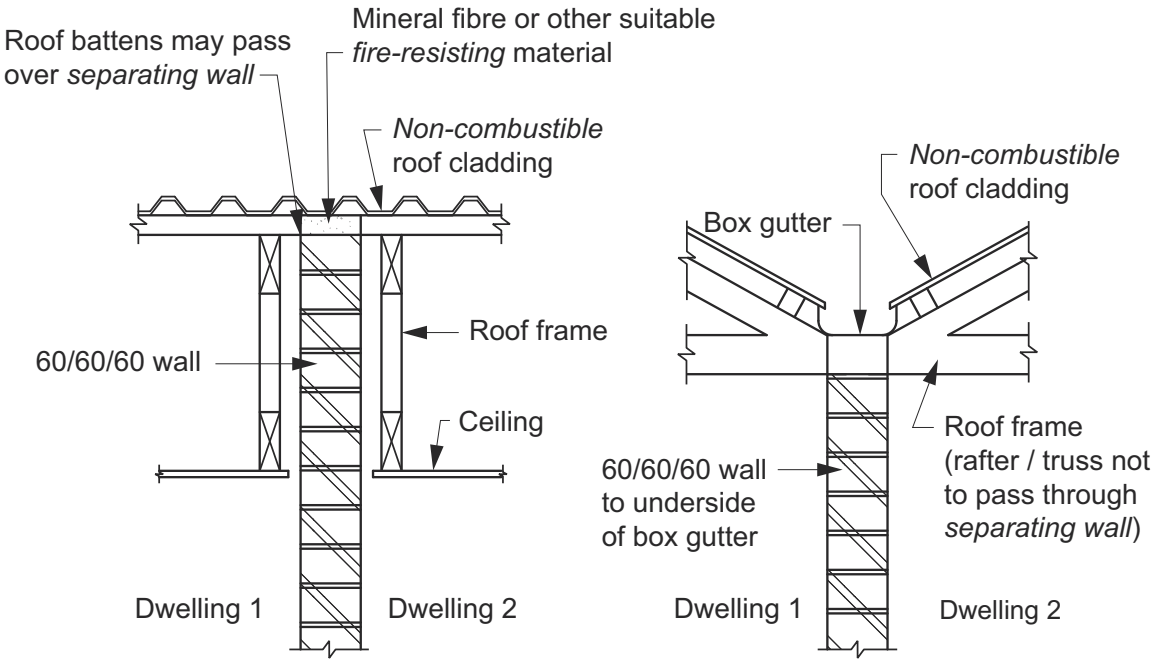

(a) Wall parallel to roof frame **(b) Wall at right-angles to roof frame**

Figure 9.3.1c: Separating wall construction — Underside of non-combustible roof cladding (diagram 2)

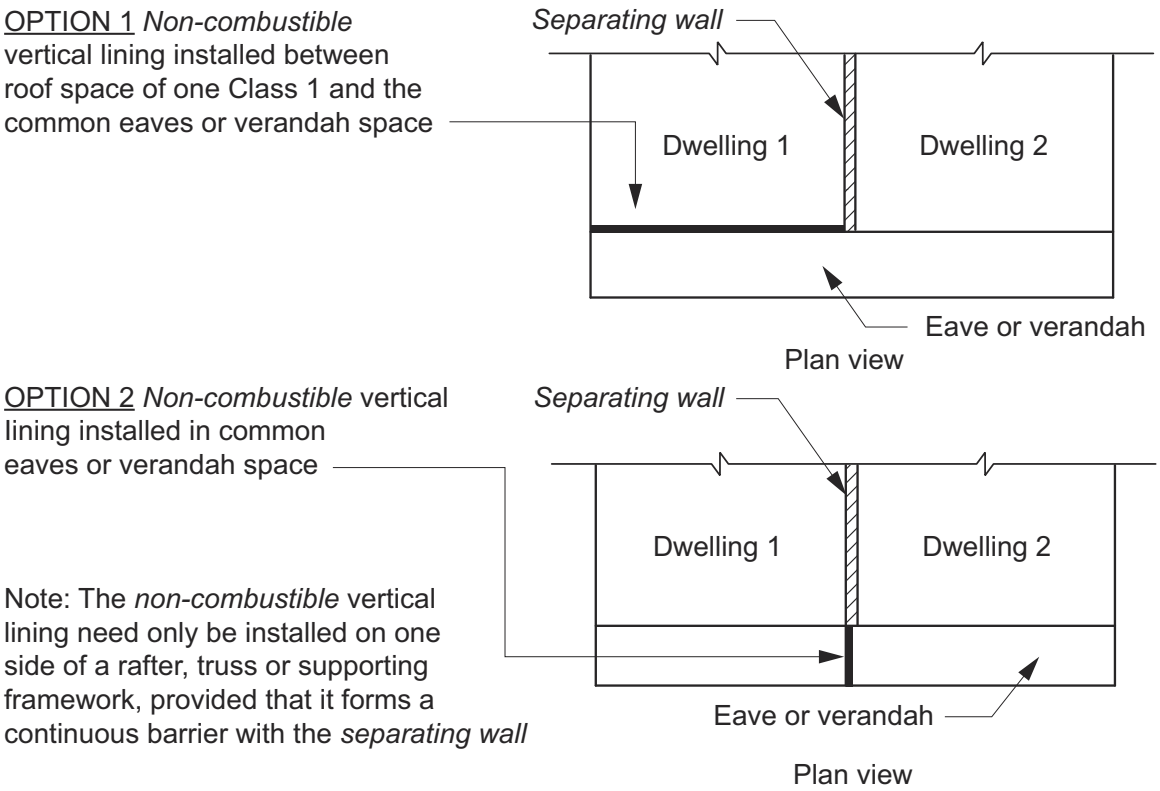

Figure Notes

Elements crossing the *non-combustible* vertical lining must comply with 9.3.1(3).

9.3.2 Services in separating walls

[2019: 3.7.3.3]

(1) Any service opening, other than those listed in (2), (3) and (4), in a *separating wall* must have construction with an

FRL of not less than -/60/60.

(2) If an electrical wire or cable penetrates a *separating wall*—

(a) the service and building element at the penetration must—

(i) be identical with a prototype assembly that has been tested in accordance with AS 4072.1 and AS 1530.4 and achieve an FRL of not less than -/60/60; or

(ii) differ from a prototype assembly of the service and building element in accordance with AS 4072.1; or

(b) the service must be installed so that—

(i) the opening is neatly formed, cut or drilled and no closer than 50 mm to any other service; and

(ii) the opening is no larger in cross-section than—

(A) 2000 mm^2 if only a single cable is accommodated and the gap between the cable and the wall is no wider than 15 mm; or

(B) 500 mm^2 in any other case; and

(iii) any gap between the service and the wall is packed with mineral fibre or other suitable *fire-resisting* material.

(3) If an electrical switch, outlet, socket or the like is accommodated in a *separating wall*—

(a) the service and building element at the penetration must—

(i) be identical with a prototype assembly which has been tested in accordance with AS 4072.1 and AS 1530.4 and achieve an FRL of not less than -/60/60; or

(ii) differ from a prototype assembly of the service and building element in accordance with AS 4072.1; or

(b) the service must be installed so that—

(i) the opening or recess—

(A) is not located opposite any point within 300 mm horizontally or 600 mm vertically of any opening or recess on the opposite side of the wall; or

(B) does not extend beyond half the thickness of the wall; and

(ii) any gap between the service and the wall is packed with mineral fibre or other suitable *fire-resisting* material.

(4) Other than where a tested system is used in accordance with (3)(a), if an electrical switch, socket, outlet or the like is accommodated in a hollow *separating wall*, the *cavity* immediately behind the service must be framed and packed with mineral fibre or other suitable *fire-resisting* material (see Figure 9.3.2).

Figure 9.3.2: Separating wall construction — Services in cavity construction

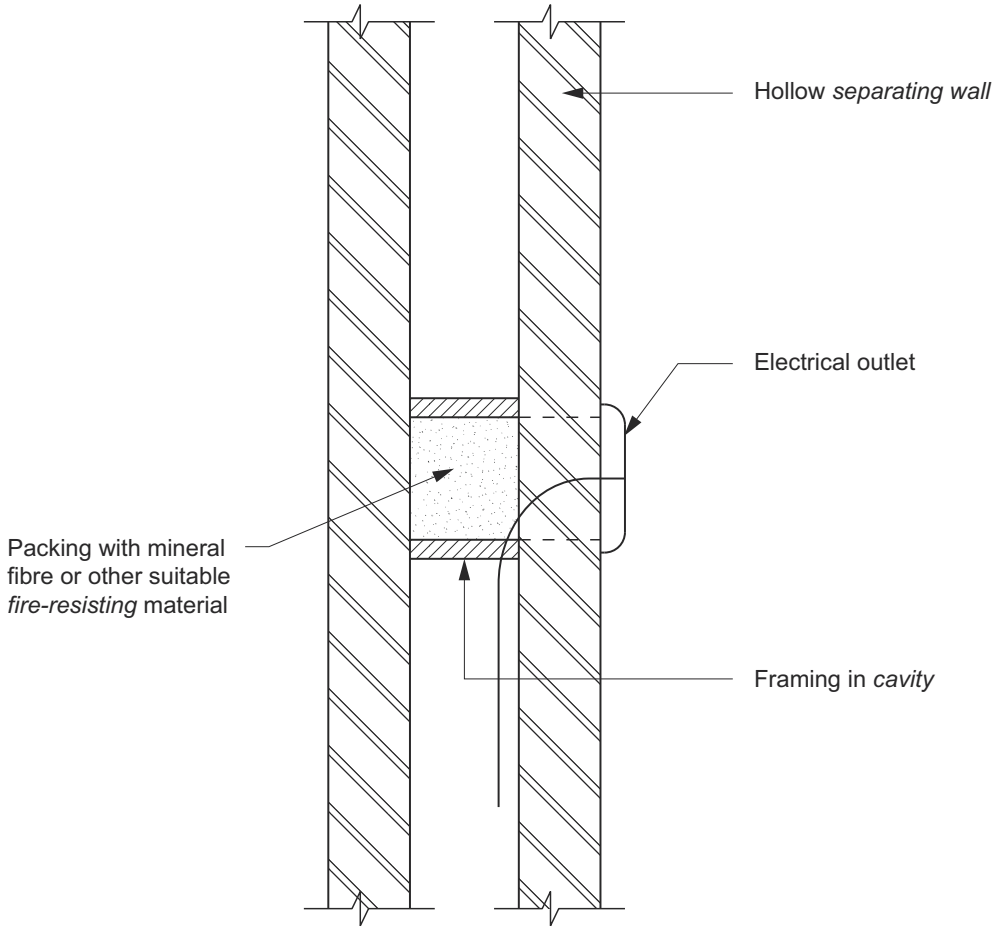

Explanatory Information

For the purposes of 9.3.2 and 10.7.2, a reference to a *separating wall* includes a wall that separates a Class 1 building from a Class 10a building that is not associated with the Class 1 building.

It is important that any opening in a *separating wall* between Class 1 buildings does not allow the free passage of fire between buildings. Many designs would require the installation of openings for electrical cables and outlets in these walls. 9.3.2 therefore allows such openings provided they comply with the requirements of that provision.

A reference to a hollow *separating wall* in 9.3.2(4) may include a stud wall, masonry *cavity* wall or a wall of hollow blockwork.

Part 10.7 (sound insulation) also contains requirements relevant to *separating walls*, in addition to the provisions of this Part. This includes installation requirements for walls and services to achieve appropriate levels of sound insulation.

9.3.3 Roof lights

[2019: 3.7.3.4]

Combustible roof lights, skylights or the like installed in a roof or part of a roof *required* to have a *non-combustible* covering must—

(a) have an aggregate area not more than 20% of the roof or part of the roof; and

(b) be not less than 900 mm from the vertical projection of a *separating wall* extending to the underside of the roof covering.

9.3.4 Horizontal projections

[2019: 3.7.3.5]

(1) Where a horizontal projection forms part of a *separating wall* complying with 9.3.1, any horizontal projection within 1.8 m on each side of the *separating wall* (see Figure 9.3.4) must—

(a) be a floor/ceiling or floor/soffit system incorporating a ceiling or soffit which has a *resistance to the incipient spread of fire* to the space above itself of not less than 60 minutes; or

(b) have an FRL not less than 30/30/30 when tested from the underside; or

(c) have a *fire-protective covering* on the underside of the floor, including beams incorporated in it, if the floor is *combustible* or of metal.

(2) The part of the *separating wall* that projects outwards horizontally must—

(a) extend to the underside of the floor/ceiling or floor/soffit system complying with (1); and

(b) not be crossed by timber or other *combustible* building elements except for framing members with dimensions of 75 x 50 mm or less, or sarking; and

(c) have any gap between the bottom of the wall and the underside of the floor/ceiling or floor/soffit system packed with mineral fibre or other suitable *fire-resisting* material.

(3) Where a floor subject to (1)(b) depends on direct vertical or lateral support from another part to maintain its FRL, that supporting part must have an FRL of not less than 30/-/-.

(4) Where a service passes through a floor referred to in (1), the penetration must not reduce the fire performance of the floor or covering.

Figure 9.3.4: Horizontal projection forming part of a separating wall

Class 1 buildings on same allotment

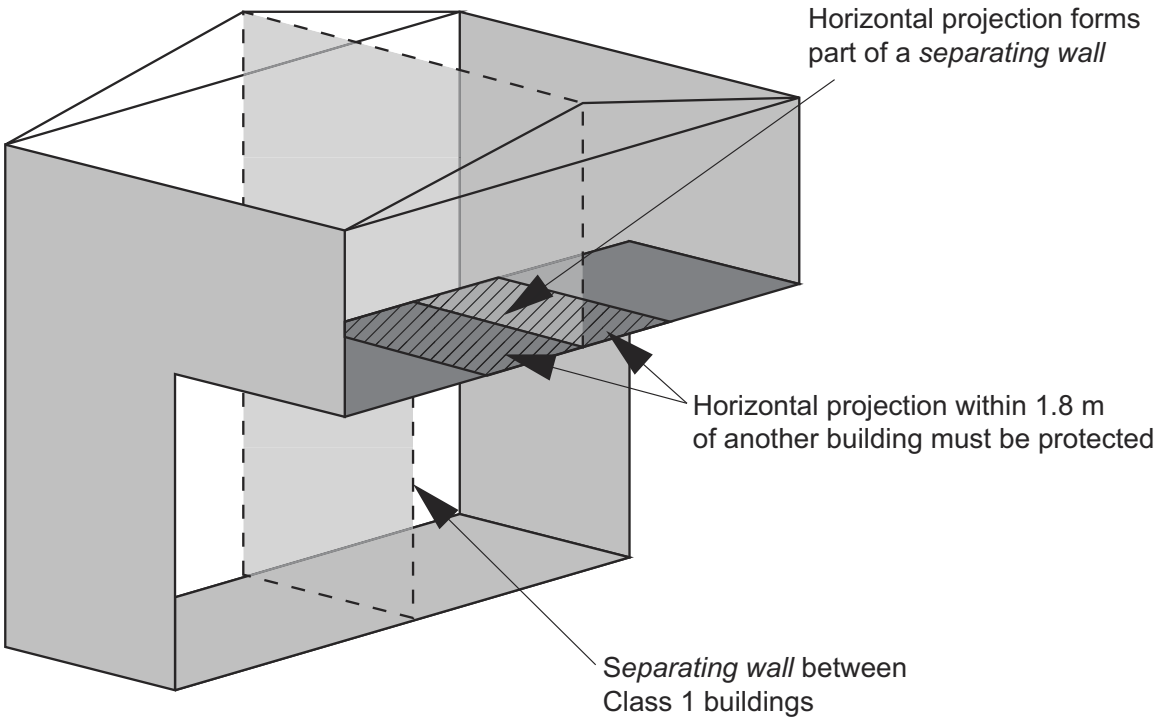

Figure Notes

Horizontal projections within 1.8 m of another building must be protected in accordance with 9.3.4(1).

Part 9.4 Fire protection of garage top dwellings

NSW Part 9.4

9.4.1 Walls requiring protection

[2019: 3.7.4.2]

(1) Where parts of a Class 1a dwelling are located above a Class 10a *private garage* that is not associated with the Class 1a dwelling—

(a) any wall separating parts of the Class 1a dwelling from the *private garage* not associated with the dwelling must comply with (2); and

(b) any *private garage* associated with and located below the Class 1a dwelling must be separated from the *private garage* not associated with the dwelling by a wall complying with (2).

(2) A wall *required* by (1) must—

(a) have either—

(i) an FRL of not less than 60/60/60 when tested from the *private garage* associated with another dwelling side; or

(ii) be of masonry construction not less than 90 mm thick; and

(b) commence at the footings or ground slab; and

(c) extend to the underside of a separating floor complying with 9.4.2; and

(d) comply with 9.3.1(2) to (5) and 9.3.2 as applicable.

9.4.2 Separating floors

[2019: 3.7.4.3]

(1) Where parts of a Class 1a dwelling are located above or below a Class 10a *private garage* that is not associated with the Class 1a dwelling, any floor separating the Class 1a dwelling from the Class 10a *private garage* not associated with the dwelling must—

(a) be a floor/ceiling or floor/soffit system incorporating a ceiling or soffit which has a *resistance to the incipient spread of fire* to the space above itself of not less than 60 minutes; or

(b) have an FRL not less than 30/30/30 when tested from the underside; or

(c) have a *fire-protective covering* on the underside of the floor, including beams incorporated in it, if the floor is *combustible* or of metal.

(2) Where a floor subject to (1)(b) depends on direct vertical or lateral support from another part to maintain its FRL, that supporting part must have an FRL of not less than 30/-/-.

(3) Where a service passes through a floor referred to in (1), the penetration must not reduce the fire performance of the floor or covering.

Notes

Figure 9.4.2 illustrates requirements of this provision.

Figure 9.4.2: Separating wall and floor construction

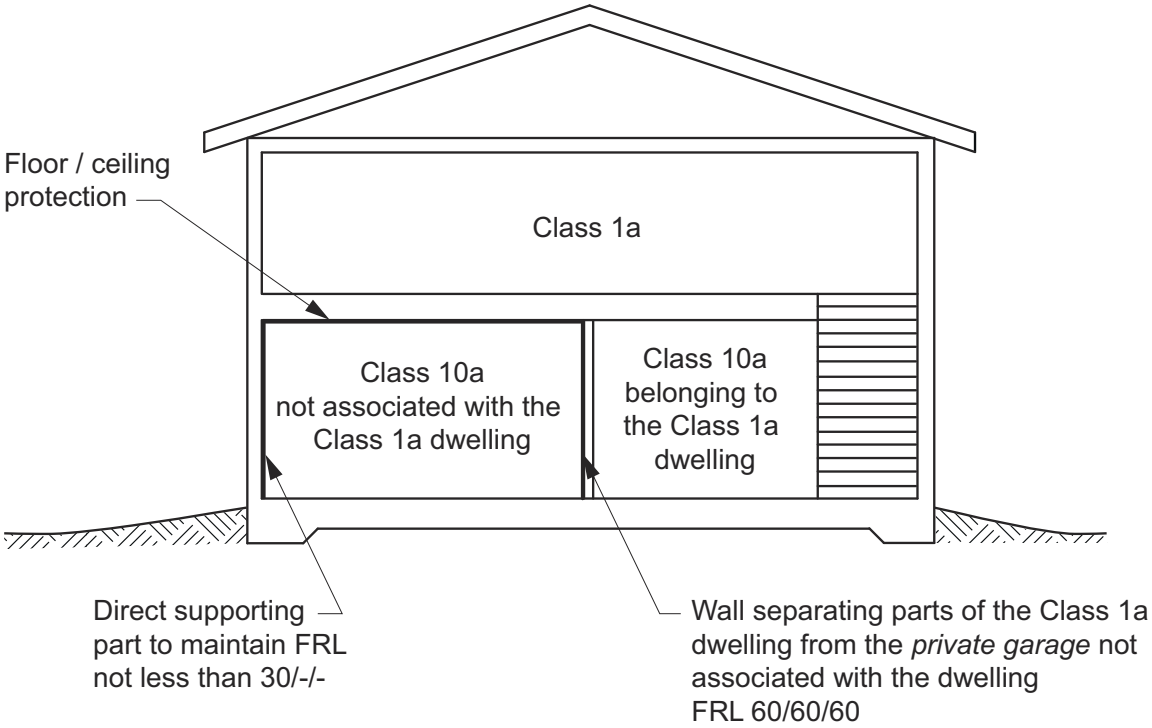

Figure Notes

(1) For floor/ceiling protection, see 9.4.1(2)(c) and 9.4.2.

(2) For FRL for direct supporting part, see 9.4.2(2).

(3) For FRL for wall separating parts of the Class 1a dwelling from the non-associated *private garage*, see 9.4.1(1).

Part 9.5 Smoke alarms and evacuation lighting

NSW 9.5.1

9.5.1 Smoke alarm requirements

[2019: 3.7.5.2]

Smoke alarms must—

(a) be located in—

(i) a Class 1a building in accordance with 9.5.2 and 9.5.4; and

(ii) a Class 1b building in accordance with 9.5.3 and 9.5.4; and

(b) comply with AS 3786, except that in a Class 10a *private garage* where the use of the area is likely to result in smoke alarms causing spurious signals, any other alarm deemed suitable in accordance with AS 1670.1 may be installed provided that smoke alarms complying with AS 3786 are installed elsewhere in the Class 1 building; and

(c) be powered from the consumer mains source where a consumer mains source is supplied to the building; and

(d) be interconnected where there is more than one alarm.

Explanatory Information

A smoke alarm can give spurious alarms if the atmosphere contains particles which obscure vision, such as could occur in a Class 10a *private garage* part of a building. 9.5.1(b) therefore allows the use of a more suitable alarm, such as a heat alarm, in these locations.

9.5.1(d) requires alarms to be interconnected where there is more than one alarm. This only applies within a single dwelling. Therefore, alarms in a Class 1a dwelling need not be interconnected with alarms in another dwelling or a *private garage* which does not belong to the Class 1a dwelling.

9.5.2 Location – Class 1a buildings

[2019: 3.7.5.3]

In a Class 1a building, smoke alarms must be located in—

(a) any storey containing bedrooms, every corridor or hallway associated with a bedroom, or if there is no corridor or hallway, in an area between the bedrooms and the remainder of the building; and

(b) each other storey not containing bedrooms.

Notes

Figure 9.5.2a and 9.5.2b illustrates requirements of this provision.

Figure 9.5.2a: Class 1a building where all bedrooms are grouped together and served by a hallway

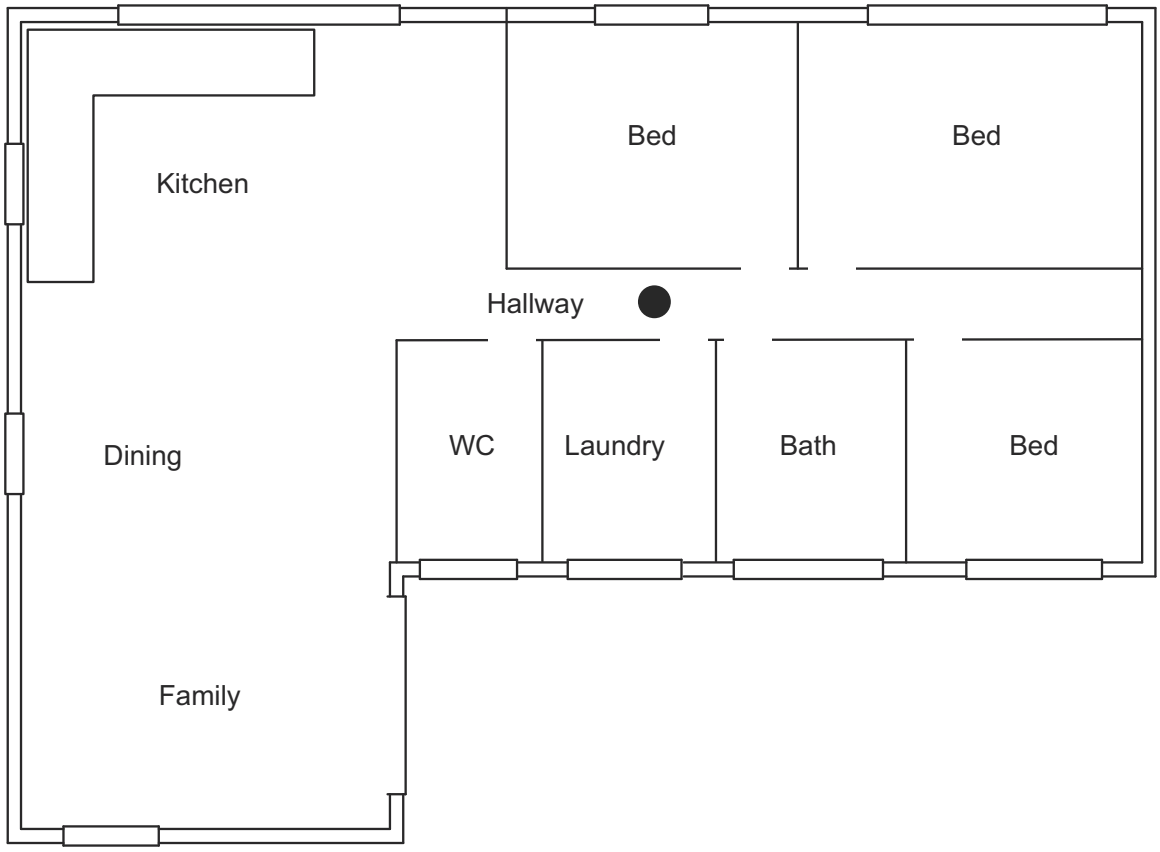

Figure Notes

In this diagram, the location of the smoke alarm is indicated by a black dot.

Figure 9.5.2b: Class 1a building where bedrooms are located in separate areas

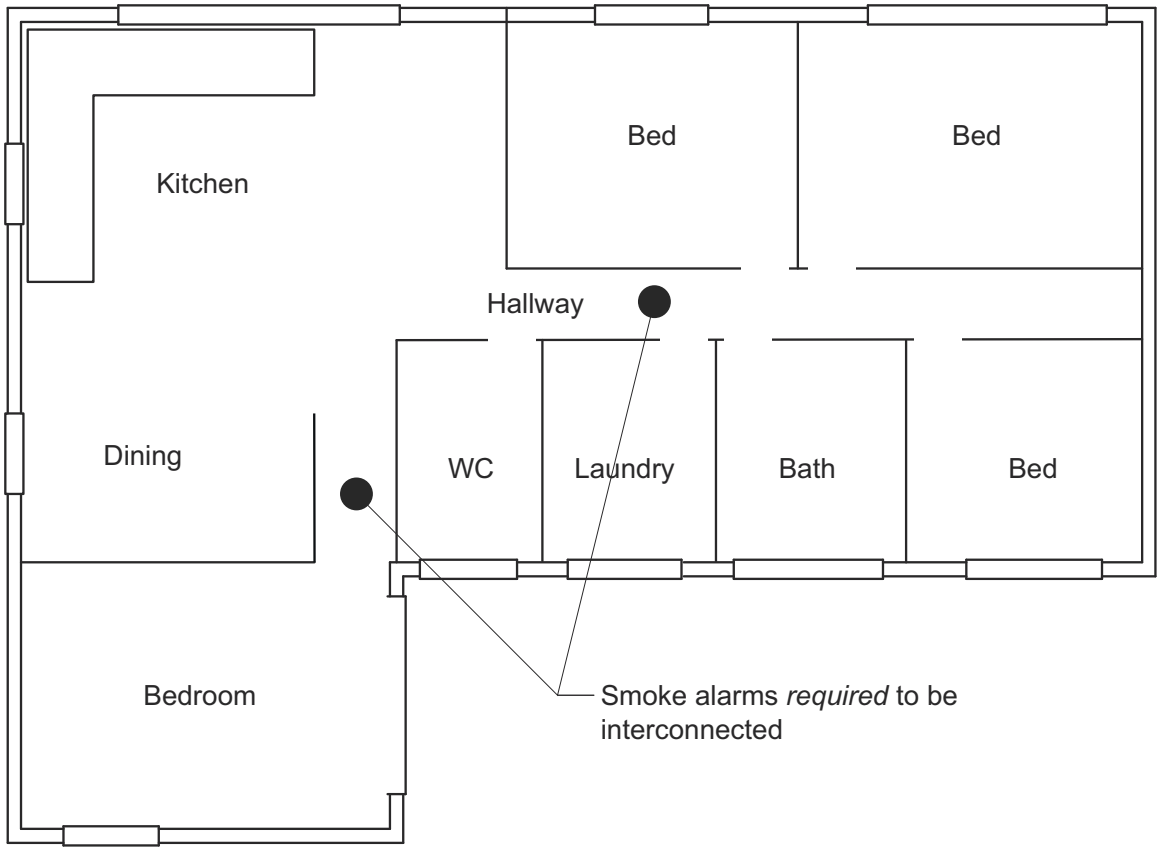

Figure Notes

(1) In this diagram, the location of each smoke alarm is indicated by a black dot.

(2) Smoke alarms are *required* to be interconnected by 9.5.1(d).

9.5.3 Location – Class 1b buildings

[2019: 3.7.5.4]

In a Class 1b building, smoke alarms must be located in—

(a) every bedroom; and

(b) every corridor or hallway associated with a bedroom, or if there is no corridor or hallway, in an area between the bedrooms and the remainder of the building; and

(c) each other storey.

Notes

Figure 9.5.3 illustrates requirements of this provision.

Figure 9.5.3: Class 1b building where multiple bedrooms are served by a hallway

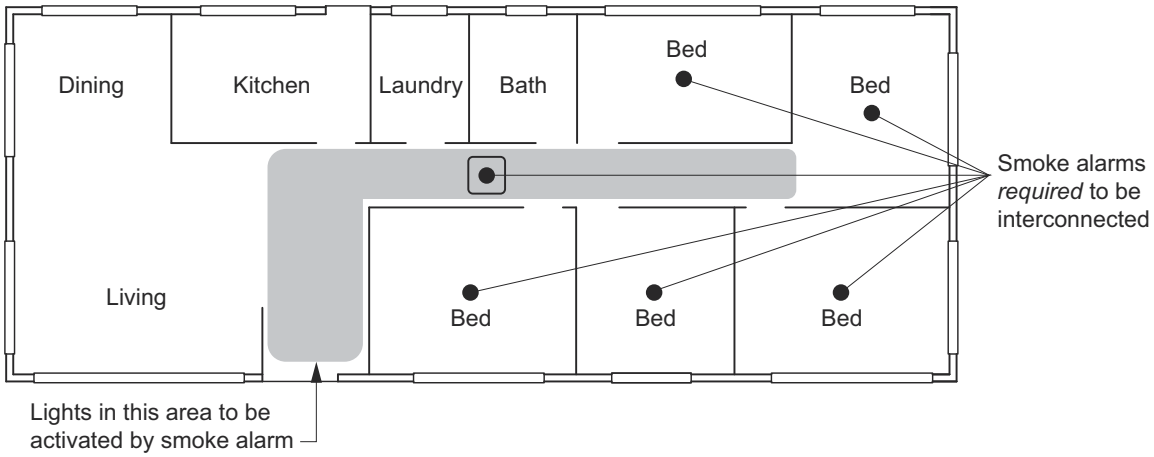

Figure Notes

(1) In this diagram—

(a) the location of each smoke alarm is indicated by a black dot; and

(b) the location of a smoke alarm with evacuation lighting is indicated by a black dot within a square; and

(c) the area served by evacuation lighting is indicated by grey shading.

(2) Smoke alarms are *required* to be interconnected by 9.4.1(d).

(3) Lighting in the grey shaded area is to be activated by a smoke alarm if using 9.5.5(b)(ii).

9.5.4 Installation of smoke alarms

[2019: 3.7.5.5]

Smoke alarms *required* by 9.5.2 and 9.5.3 must be installed on or near the ceiling, in accordance with the following:

(a) Where a smoke alarm is located on the ceiling it must be—

(i) a minimum of 300 mm away from the corner junction of the wall and ceiling; and

(ii) between 500 mm and 1500 mm away from the high point and apexes of the ceiling, if the room has a sloping ceiling.

(b) Where (a) is not possible, the smoke alarm may be installed on the wall, and located a minimum of 300 mm and a maximum of 500 mm off the ceiling at the junction with the wall.

Explanatory Information

Smoke alarms need to be located on (or near) the ceiling for optimum detection of smoke in a fire situation with special care taken to avoid dead air spaces. A dead air space is an area in which trapped hot air will prevent smoke from reaching the alarm. This space generally occurs at the apex of cathedral ceilings, the corner junction of walls and ceilings and between exposed joists etc. (see Explanatory Figure 9.5.4).

Smoke alarms may be located on the wall in accordance with 9.5.4(b). Explanatory Figure 9.5.4 provides location criteria and the dimensional relationship to building elements and the associated dead air spaces.

Figure 9.5.4 (explanatory): Installation of smoke alarms to avoid dead air space

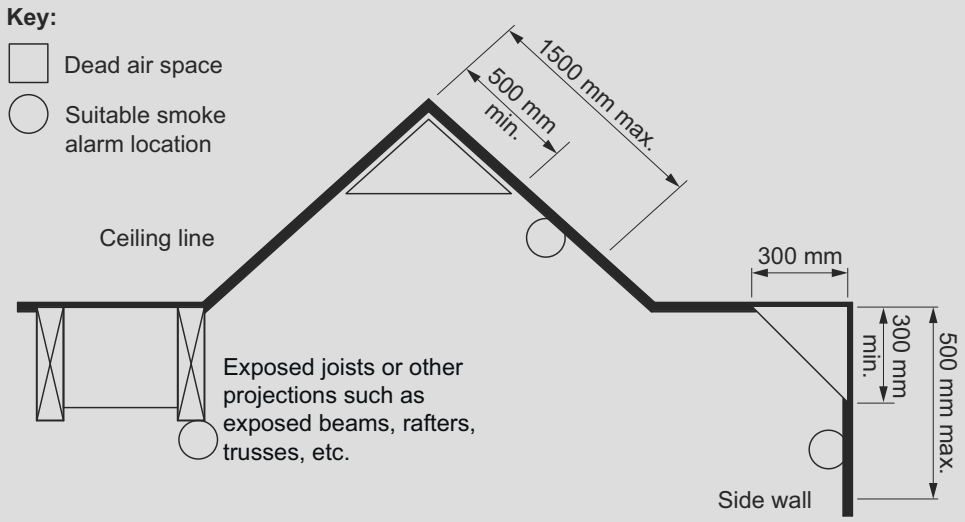

9.5.5 Lighting to assist evacuation – Class 1b buildings

[2019: 3.7.5.6]

In a Class 1b building, a system of lighting must be installed to assist evacuation of occupants in the event of a fire, and—

(a) be activated by the smoke alarm *required* by 9.5.3(b); and

(b) consist of—

(i) a light incorporated within the smoke alarm; or

(ii) the lighting located in the corridor, hallway or area served by the smoke alarm.

Explanatory Information

The lighting *required* by 9.5.5 may consist of artificial lighting which may already be installed in a corridor, hallway or area, provided that the lighting is activated by the smoke alarm. However consideration should be given to ensure that the lighting is not controlled by a dimmer or timer controlled switch which may dim the level of light to an ineffective level, or switch the light off before occupants have time to evacuate.

10 Health and amenity

Part 10.1 Scope and application of Section 10

10.1.1 Scope
10.1.2 Application

Part 10.2 Wet area waterproofing

10.2.1 Wet areas
10.2.2 Shower area (enclosed and unenclosed)
10.2.3 Area outside shower area
10.2.4 Areas adjacent to baths and spas without showers
10.2.5 Other areas
10.2.6 Waterproofing systems
10.2.7 Materials
10.2.8 Materials — waterproof
10.2.9 Materials — water resistant substrates
10.2.10 Materials — water resistant surface materials
10.2.11 Construction of wet areas — wall and floor substrate materials
10.2.12 Construction of wet area floors — falls
10.2.13 Construction of wet areas — wall and floor surface materials
10.2.14 Shower area requirements
10.2.15 Stepdown showers
10.2.16 Hob construction
10.2.17 Enclosed showers with level threshold (without hob or set down)
10.2.18 Unenclosed showers
10.2.19 Preformed shower bases
10.2.20 Baths and spas
10.2.21 Membrane installation for screed
10.2.22 Substrate surface preparation for application of membrane
10.2.23 Penetrations
10.2.24 Flashings/junctions
10.2.25 Shower area floor membrane application
10.2.26 Shower area membrane requirements for wall sheeting substrates
10.2.27 Bond breaker installation for bonded membranes
10.2.28 Installation of internal membranes
10.2.29 Membrane to drainage connection
10.2.30 Drainage riser connection
10.2.31 Door jambs on tiled floors
10.2.32 Shower screens

Part 10.3 Room heights

10.3.1 Height of rooms and other spaces

Part 10.4 Facilities

10.4.1 Required facilities
10.4.2 Construction of sanitary compartments

Part 10.5 Light

	10.5.1	Natural light
	10.5.2	Artificial lighting
Part 10.6	**Ventilation**	
	10.6.1	Application
	10.6.2	Ventilation requirements
	10.6.3	Location of sanitary compartments
Part 10.7	**Sound insulation**	
	10.7.1	Sound insulation requirements
	10.7.2	Determination of airborne sound insulation ratings
	10.7.3	Construction of sound insulated walls
	10.7.4	Services
	10.7.5	Acceptable forms of construction for masonry walls
	10.7.6	Acceptable forms of construction for concrete walls
	10.7.7	Acceptable forms of construction for autoclaved aerated concrete walls
	10.7.8	Acceptable forms of construction for timber and steel framed walls
Part 10.8	**Condensation management**	
	10.8.1	External wall construction
	10.8.2	Exhaust systems
	10.8.3	Ventilation of roof spaces

Part 10.1 Scope and application of Section 10

10.1.1 Scope

[New for 2022]

This Section sets out the *Deemed-to-Satisfy Provisions* for—

(a) *wet areas* and external *waterproofing* (see Part 10.2); and

(b) room heights (see Part 10.3); and

(c) facilities (see Part 10.4); and

(d) light (see Part 10.5); and

(e) ventilation (see Part 10.6); and

(f) sound insulation (see Part 10.7); and

(g) *condensation* management (see Part 10.8).

10.1.2 Application

[New for 2022]

The application of this Section is subject to the following:

(a) The Governing Requirements of NCC Volume Two.

(b) The State and Territory variations, additions and deletions contained in the Schedules to the ABCB Housing Provisions and NCC Volume Two.

Explanatory Information

In NCC 2019, the content of Section 10 of the ABCB Housing Provisions (other than content added in NCC 2022 or later) was contained in the acceptable construction practices for Parts 3.8.1 to 3.8.7 of NCC 2019 Volume Two.

Part 10.2 Wet area waterproofing

SA 10.2.1

10.2.1 Wet areas

[2019: 3.8.1.2]

(1) Building elements in *wet areas* within a building must be protected with a *waterproofing system*.

(2) The *waterproofing system* in (1) must be either *waterproof* or *water resistant* in accordance with 10.2.2 to 10.2.6.

10.2.2 Shower area (enclosed and unenclosed)

[2019: Table 3.8.1.1]

(1) For a *shower area* with a hob, step-down or level threshold, the following applies:

(a) The floor of the *shower area* must be *waterproof*, including any hob or step-down (see Figure 10.2.2); and

(b) The walls of the *shower area* must be *waterproof* not less than 1800 mm above the floor substrate (see Figure 10.2.2).

(c) Wall junctions and joints within the *shower area* must be *waterproof* not less than 40 mm either side of the junction (see Figure 10.2.2).

(d) Wall/floor junctions within the *shower area* must be *waterproof* (see Figure 10.2.2).

(e) Penetrations within the *shower area* must be *waterproof*.

(2) A shower with a *preformed shower base* must also comply with the requirements of (1), except for (a) which is not applicable.

Figure 10.2.2: Extent of treatment for shower areas — concrete compressed fibre-cement and fibre-cement sheet floors

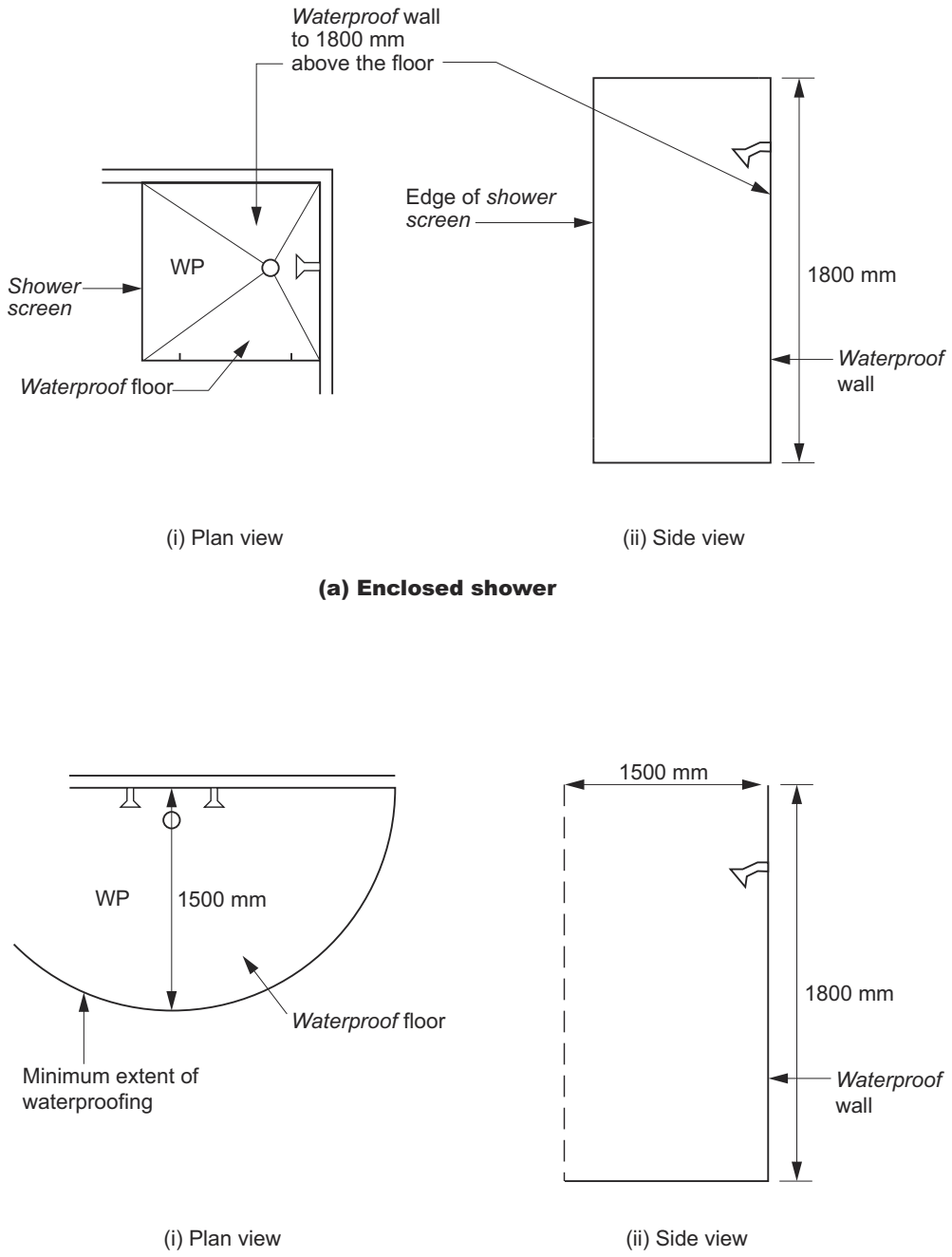

Figure Notes

Wall/floor junction heights are to be as per 10.2.2 to 10.2.6 (as applicable).

Notes

Where a shower is above a bath or spa, use requirements for shower.

10.2.3 Area outside shower area

[2019: Table 3.8.1.1]

(1) For concrete, compressed fibre-cement and fibre-cement sheet flooring, the floor of the room must be *water resistant*.

(2) For timber floors including particleboard, plywood and other timber based flooring materials, the floor of the room must be *waterproof*.

(3) Wall/floor junctions must be—

(a) *waterproof*; and

(b) where a *flashing* is used, the horizontal leg must be not less than 40 mm.

10.2.4 Areas adjacent to baths and spas without showers

[2019: Table 3.8.1.1]

(1) For areas adjacent to all baths and spas, the following applies:

(a) For concrete, compressed fibre-cement and fibre-cement sheet flooring, the floor of the room must be *water resistant*.

(b) For timber floors including particleboard, plywood and other timber based flooring materials, the floor of the room must be *waterproof*.

(c) Tap and spout penetrations must be *waterproof* where they occur in horizontal surfaces.

(2) For areas adjacent to non-freestanding baths and spas, the following applies:

(a) Walls must be *water resistant* (see Figure 10.2.4a and Figure 10.2.4b)—

(i) to a height of not less than 150 mm above the *vessel*, for the extent of the *vessel*, where the *vessel* is within 75 mm of a wall; and

(ii) for all exposed surfaces below *vessel* lip.

(b) Wall junctions and joints must be *water resistant* within 150 mm above a *vessel* for the extent of the *vessel*.

(c) Wall/floor junctions must be *waterproof* for the extent of the *vessel* (see Figure 10.2.4a and Figure 10.2.4b).

(3) For inserted baths and spas, the following applies:

(a) For floors and horizontal surfaces:

(i) Any shelf area adjoining the bath or spa must be *waterproof* and include a *waterstop* under the *vessel* lip.

(ii) There are no requirements for the floor under a bath or spa.

(b) For walls:

(i) *Waterproof* to not less than 150 mm above the lip of a bath or spa.

(ii) There are no requirements for the floor under a bath or spa.

(c) For wall junctions and joints, the following applies:

(i) *Waterproof* junctions within 150 mm of a bath or spa.

(ii) There are no requirements for junctions and joints in walls beneath the lip of a bath or spa.

(d) Tap and spout penetrations must be *waterproof* where they occur in horizontal surfaces.

Figure 10.2.4a: Areas adjacent to baths and spas without showers for concrete, compressed fibre-cement and fibre-cement sheet flooring

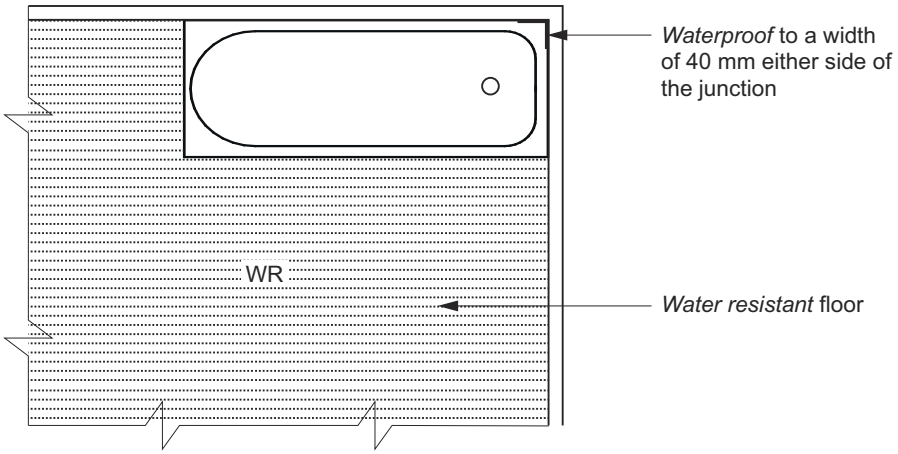

(a) Plan view

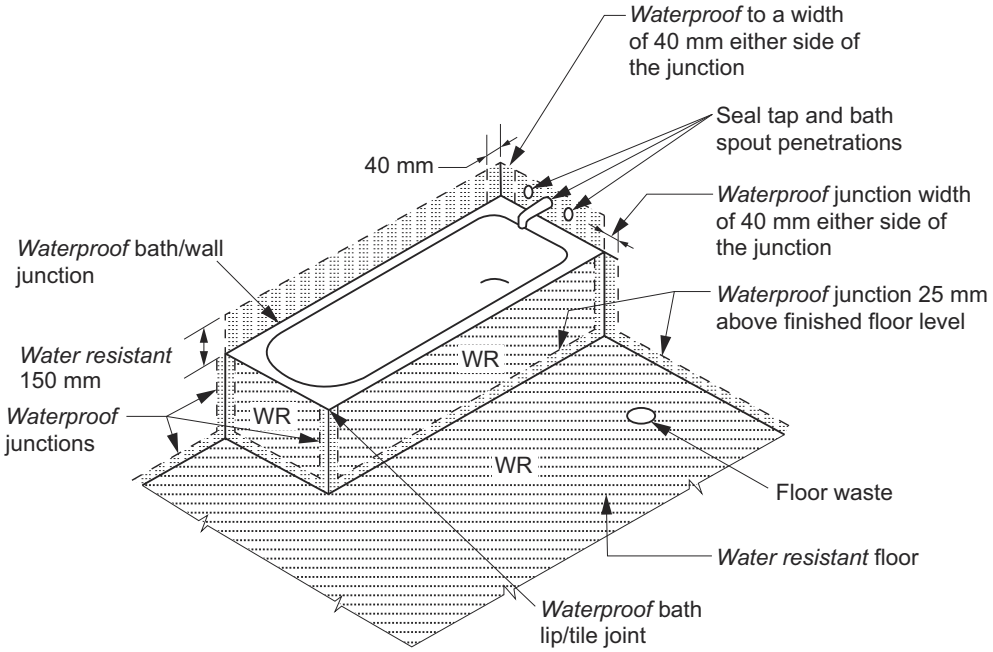

(b) Isometric view

Figure 10.2.4b: Areas adjacent to baths and spas without showers for timber floors including particle-board, plywood and other floor materials

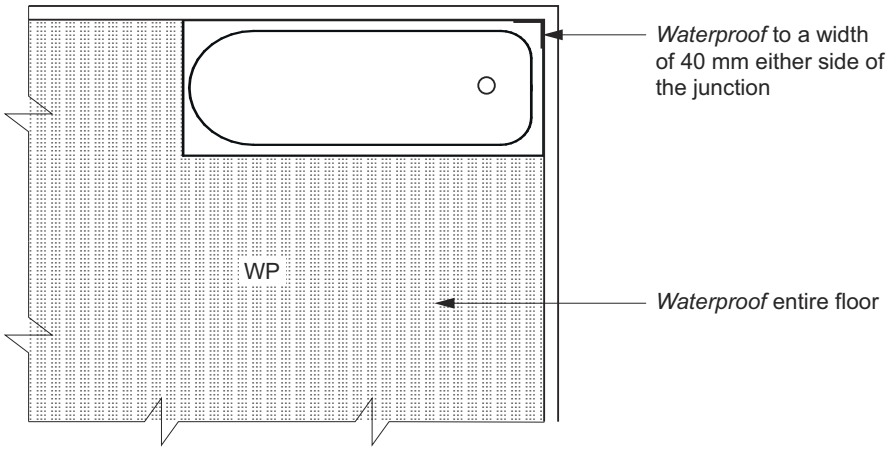

(a) Plan view

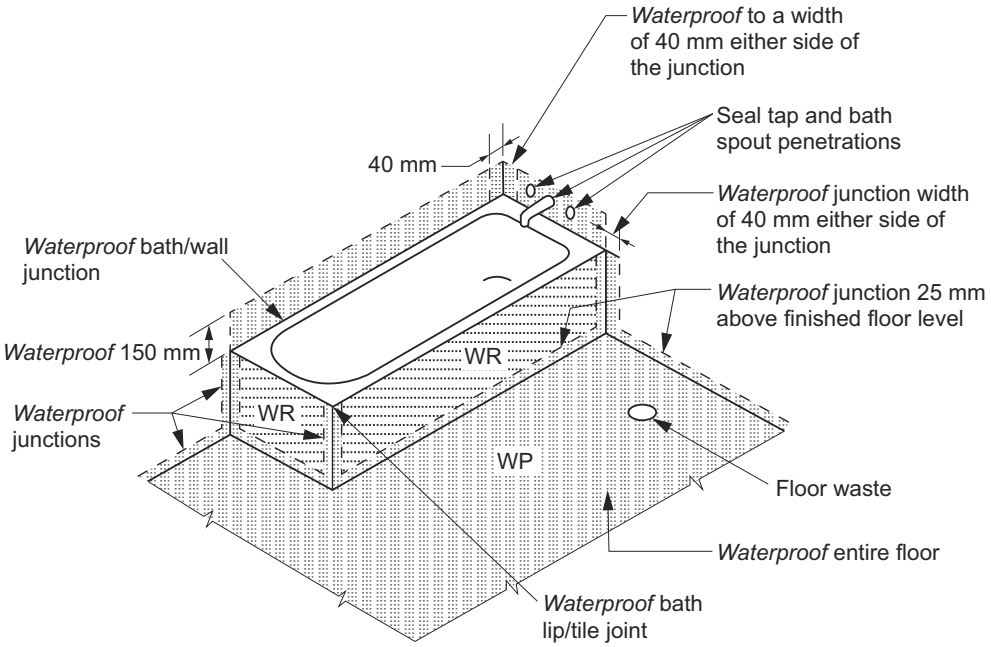

(b) Isometric view

10.2.5 Other areas

[2019: Table 3.8.1.1]

(1) For walls adjoining other types of *vessels* (e.g. sink, basin or laundry tub), the following applies:

(a) Walls must be *water resistant* to a height of not less than 150 mm above the *vessel*, for the extent of the *vessel*, where the *vessel* is within 75 mm of a wall (see Figure 10.2.5).

(b) *Waterproof* wall junctions where a *vessel* is fixed to a wall.

(c) *Waterproof* tap and spout penetrations where they occur in surfaces required to be *waterproof* or *water resistant*.

(2) For laundries and WCs, the following applies:

(a) The floor of the room must be *water resistant*.

(b) Wall/floor junctions must be *water resistant*, and where a *flashing* is used, the horizontal leg must not be less

than 40 mm.

(3) For WCs with handheld bidet spray installations, the following applies:

(a) The floor of the room must be *waterproof*.

(b) Walls must be—

(i) *waterproof* in WC area within a 900 mm radius from the wall connection of the handheld bidet spray device to a height of not less than 150 mm above the floor substrate; and

(ii) *water resistant* in WC area within a 900 mm radius from the wall connection of the handheld bidet device to not less than 1200 mm above the finished floor level of the WC.

(c) Wall junctions within the WC area within 900 mm radius from the wall connection of the handheld bidet spray device must be *waterproof*.

(d) Wall/floor junctions within the WC area within 1000 mm radius from the wall connection of the handheld bidet spray device must be *waterproof*.

(e) Penetrations in the WC area must be *waterproof*.

Figure 10.2.5: Bath and vessel abutting wall — areas to be protected

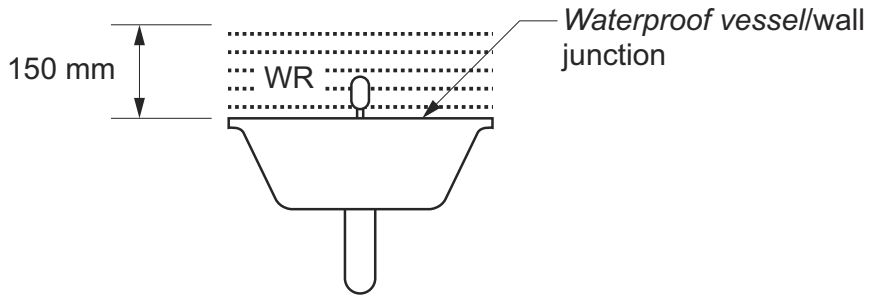

(a) Vessel abutting wall

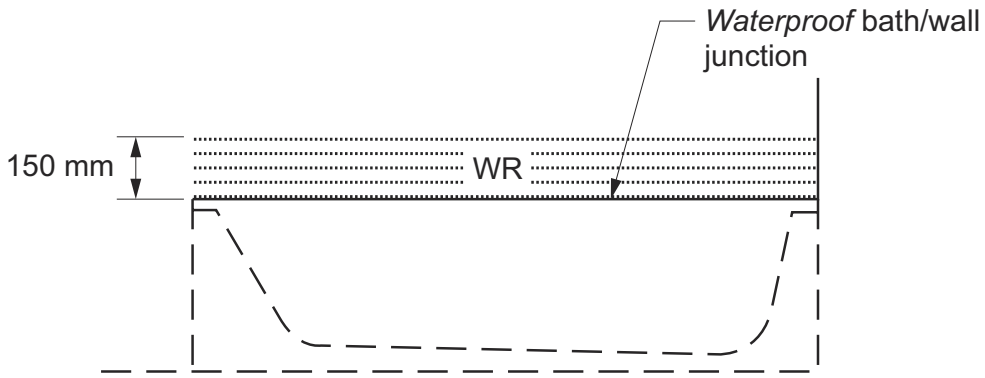

(b) Wall/bath junction

10.2.6 Waterproofing systems

[New for 2022]

(1) For the purposes of this Part, a *waterproofing system* is deemed—

(a) *waterproof*, if it complies with (2); or

(b) *water resistant*, if it complies with (3).

(2) For a *waterproofing system* required to be *waterproof* in accordance with 10.2.2 to 10.2.5, the materials nominated in 10.2.8 must be used.

(3) For a *waterproofing system* required to be *water resistant* in accordance with 10.2.2 to 10.2.5, the materials nominated

in 10.2.9 must be used in conjunction with the materials in 10.2.10.

10.2.7 Materials

[New for 2022]

Where *required* to be installed in accordance with 10.2.2 to 10.2.6, materials used in *wet areas* forming a *waterproofing system* must be either *waterproof* or *water resistant* in accordance with 10.2.8 and 10.2.9.

10.2.8 Materials — waterproof

[New for 2022]

The following materials used in *waterproofing systems* are deemed to be *waterproof*:

(a) Stainless steel.

(b) Flexible *waterproof* sheet flooring material with *waterproof* joints.

(c) *Membranes* complying with AS/NZS 4858.

(d) *Waterproof* sealant.

10.2.9 Materials — water resistant substrates

[New for 2022]

The following materials are deemed to be *water resistant*:

(a) For walls:

(i) Concrete complying with AS 3600, treated to resist moisture movement.

(ii) Cement render, treated to resist moisture movement.

(iii) Compressed fibre-cement sheeting manufactured in accordance with AS/NZS 2908.2.

(iv) *Water resistant* plasterboard sheeting.

(v) Masonry in accordance with AS 3700, treated to resist moisture movement.

(b) For floors:

(i) Concrete complying with AS 3600.

(ii) Concrete slabs complying with AS 2870.

(iii) Compressed fibre-cement sheeting manufactured in accordance with AS/NZS 2908.2 and supported on a structural floor.

10.2.10 Materials — water resistant surface materials

[New for 2022]

The following surface materials are deemed to be *water resistant*:

(a) For walls:

(i) Thermosetting laminate.

(ii) Pre-decorated compressed fibre-cement sheeting manufactured in accordance with AS/NZS 2908.2.

(iii) Tiles when used in conjunction with a substrate listed in 10.2.9.

(iv) *Water resistant* flexible sheet wall material with sealed joints when used in conjunction with a substrate listed in 10.2.9.

(v) Sanitary grade acrylic linings.

(b) For floors, when used in conjunction with a substrate listed in 10.2.9:

(i) Tiles.

(ii) *Water resistant* flexible sheet flooring material with sealed joints.

(c) Concrete treated to resist moisture movement.

Explanatory Information

Sheet vinyl or linoleum would satisfy the requirements of this clause.

10.2.11 Construction of wet areas — wall and floor substrate materials

[New for 2022]

For the purposes of this Part, materials used in wall and floor substrates must comply with 10.2.9.

10.2.12 Construction of wet area floors — falls

[New for 2022]

Where a *floor waste* is installed—

(a) the minimum continuous fall of a floor plane to the waste must be 1:80; and

(b) the maximum continuous fall of a floor plane to the waste must be 1:50.

10.2.13 Construction of wet areas — wall and floor surface materials

[New for 2022]

For the purposes of this Part, wall and floor surface materials must comply with 10.2.10.

10.2.14 Shower area requirements

[New for 2022]

Shower areas must be designed as either *enclosed* or *unenclosed*—

(a) to include a *floor waste* with falls complying with 10.2.12; and

(b) with a—

(i) stepdown complying with 10.2.15; or

(ii) *hob* complying with 10.2.16; or

(iii) level threshold complying with 10.2.17.

10.2.15 Stepdown showers

[New for 2022]

For stepdown showers, the highest finished floor level of the *shower area* must be stepped down a minimum of 25 mm lower than the finished floor level outside the shower (see Figures 10.2.15a, 10.2.15b, 10.2.15c and 10.2.15d).

Figure 10.2.15a: Typical enclosed stepped down shower construction (membrane below tile bed)

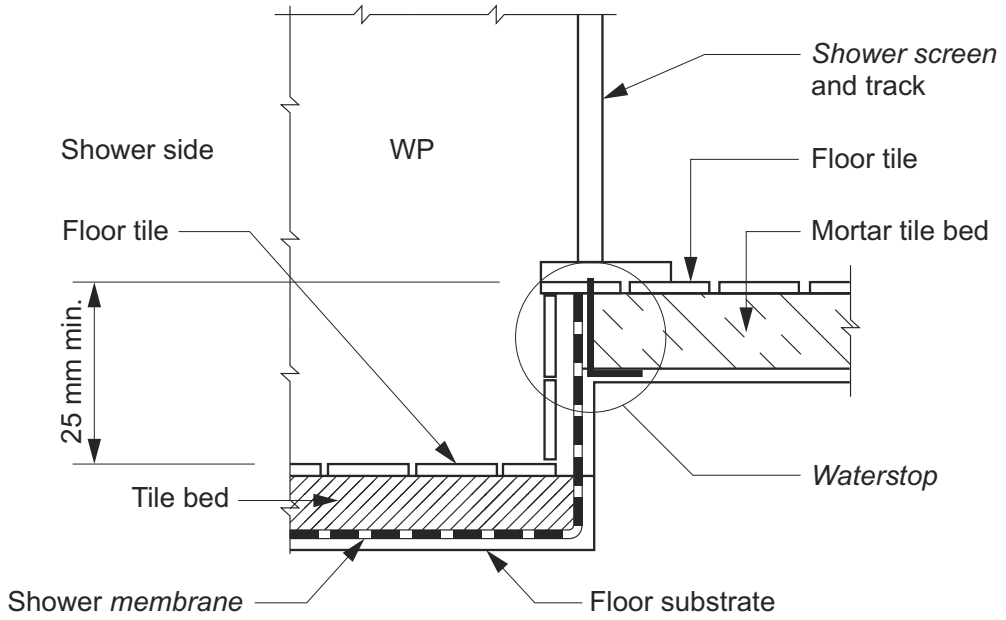

Figure 10.2.15b: Typical enclosed stepped down shower construction (membrane above tile bed)

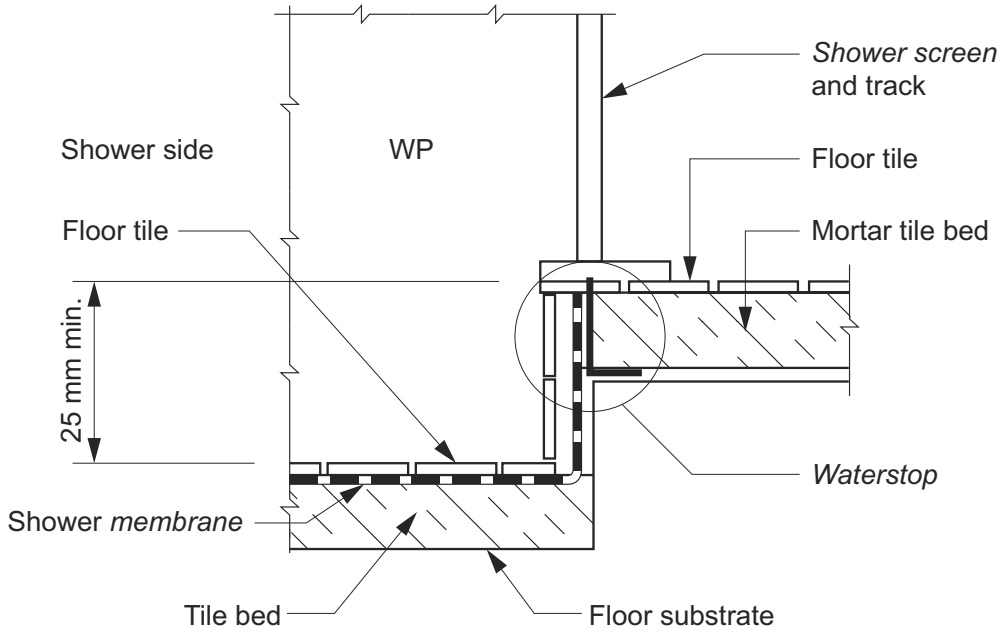

Figure 10.2.15c: Typical unenclosed stepped down shower construction (membrane below tile bed)

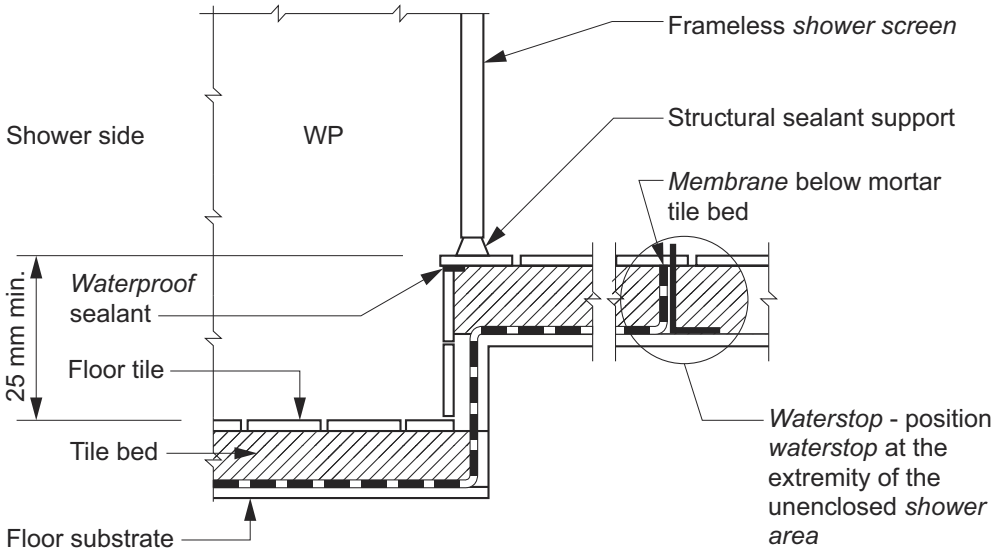

Figure 10.2.15d: Typical unenclosed stepped down shower construction (membrane above tile bed)

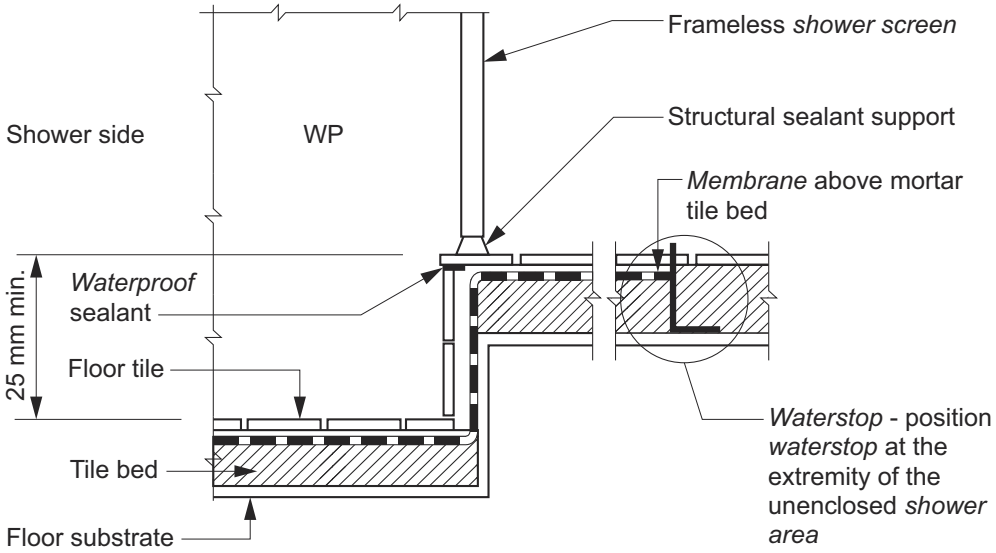

10.2.16 Hob construction

[New for 2022]

(1) *Hobs* must be constructed of—

(a) masonry; or

(b) concrete; or

(c) autoclaved aerated concrete; or

(d) extruded polyurethane foam,

in accordance with Figure 10.2.16.

(2) All gaps, joints and intersections of the *hob* substrate must be made flush before application of a *membrane*.

(3) *Hobs* must be adequately secured to the floor and sealed against the wall prior to applying a *membrane*.

(4) Timber must not be used for *hob* construction.

Figure 10.2.16: Typical hob construction — internal membrane

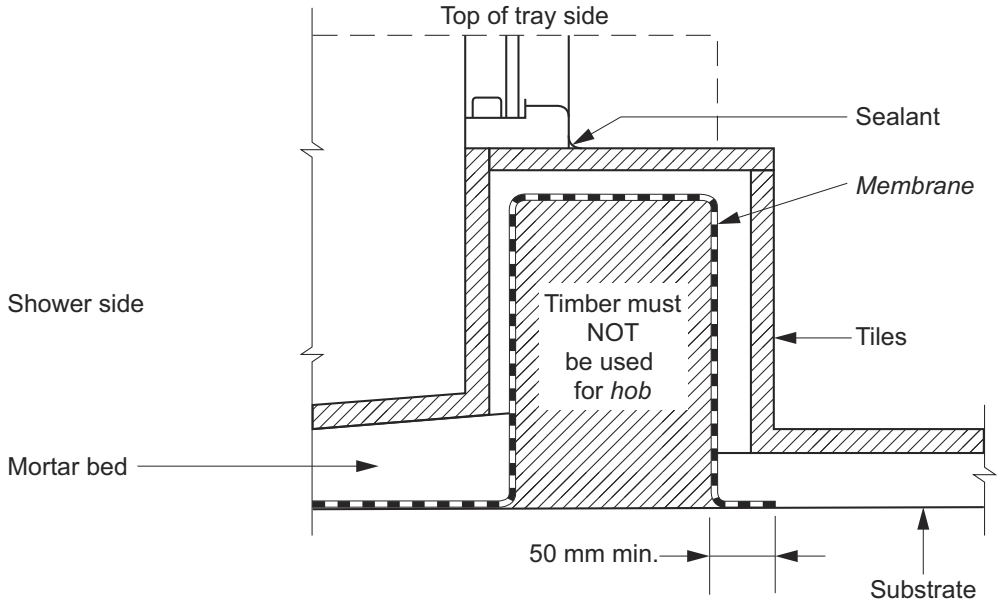

Figure Notes

For *shower screen* positioning, see 10.2.32.

10.2.17 Enclosed showers with level threshold (without hob or set down)

[New for 2022]

For enclosed showers without a stepdown or a *hob*, at the extremity of the *shower area*, a *waterstop* must be positioned so that its vertical leg finishes—

(a) where a *shower screen* is to be installed, not less than 5 mm above the finished floor level (see Figure 10.2.17); and

(b) where the *waterstop* intersects with a wall or has a joint, the junction must be waterproof.

Figure 10.2.17: Typical hobless construction

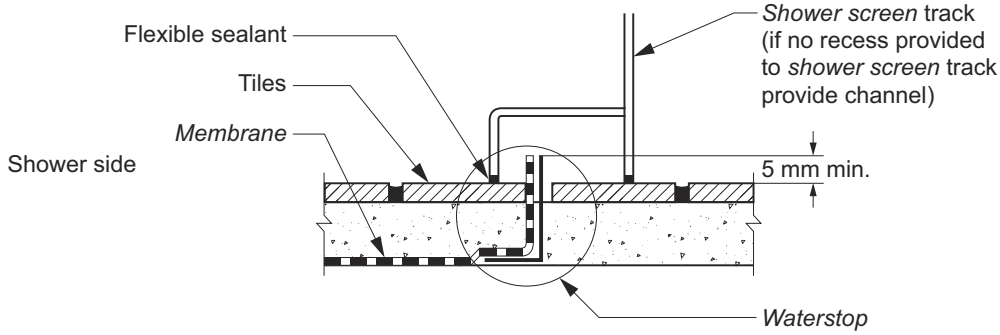

10.2.18 Unenclosed showers

[New for 2022]

(1) Unenclosed showers must be constructed as follows:

(a) A *waterstop* must be installed a minimum horizontal distance of 1500 mm from the shower rose.

(b) The vertical leg of the *waterstop* must finish—

(i) flush with the top surface of the floor (see Figure 10.2.18); and

(ii) where the *waterstop* intersects with a wall or is joined—

(A) the junction must be *waterproof*; or

(B) the whole *wet area* floor must be waterproofed and drained to a *floor waste* as for the *shower area*.

(2) In the case of (1)(b)(ii)(B), at doorways, where the height of the tiling angle needs to be adjusted for tiling purposes, the angle must be fixed with a sealant compatible with the waterproofing *membrane* without damaging the *waterproofing system*.

Figure 10.2.18: Typical termination of membrane at extent of shower area

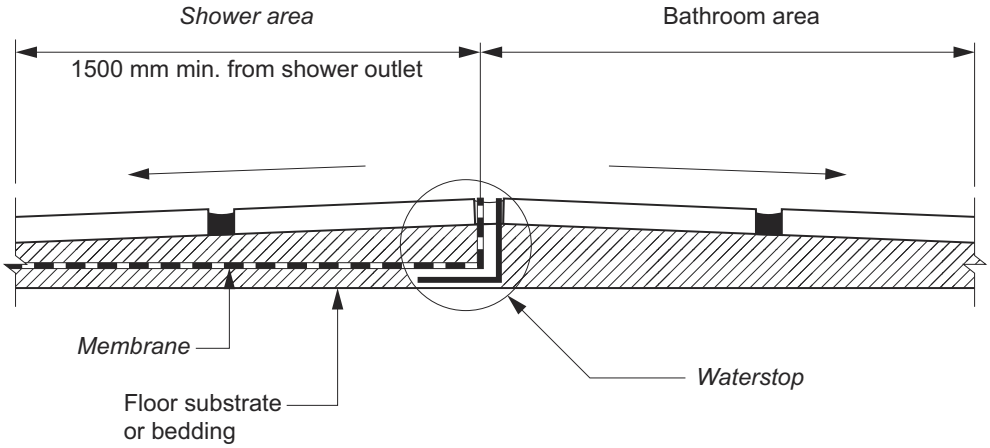

Figure Notes

Fall is to be provided in accordance with 10.2.12.

10.2.19 Preformed shower bases

[New for 2022]

Preformed shower bases must—

(a) have an upturn lip (see Figure 10.2.19a and Figure 10.2.19b); and

(b) be recessed into the wall to allow the *water resistant* surface materials and substrate materials to pass down inside the perimeter upturn lip of the shower base (see Figure 10.2.19a and Figure 10.2.19b); and

(c) be supported to prevent distortion or cracking.

Figure 10.2.19a: Typical preformed shower base wall/floor junction

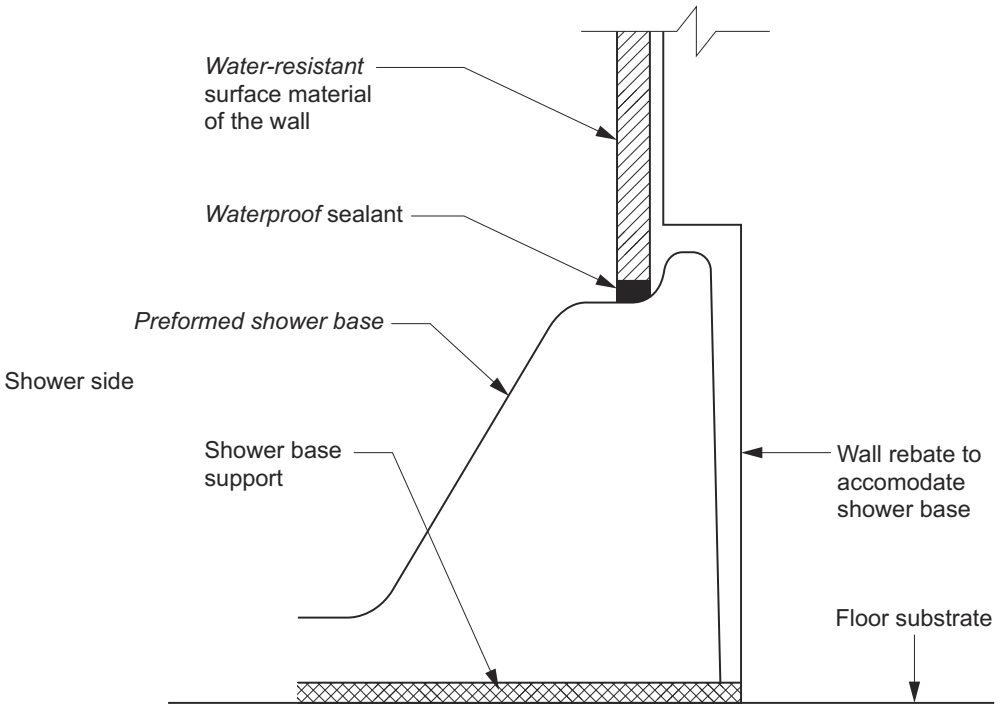

Figure Notes

(1) Rebating of timber and steel framed walls must be in accordance with AS 1684 or NASH Standard Part 2 as appropriate.

(2) Where rebating of masonry walls is required, it must be accommodated in the design in accordance with AS 3700.

Figure 10.2.19b: Typical preformed shower base/floor junction on timber floors, including particleboard, plywood and other timber materials

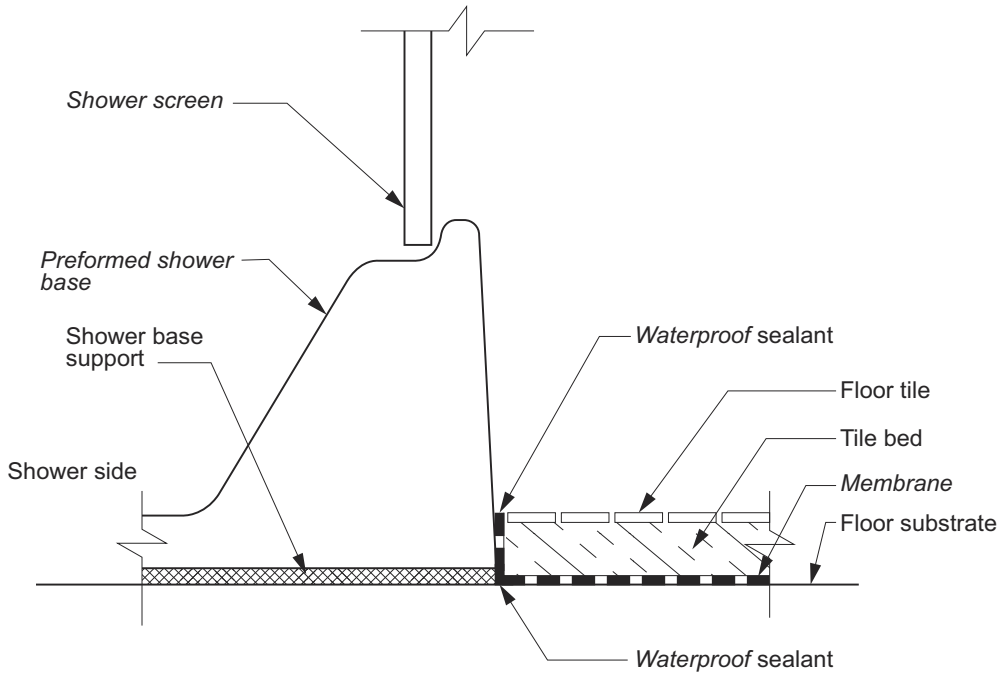

10.2.20 Baths and spas

[New for 2022]

Baths and spas, except freestanding baths and spas, must—

(a) have an upturn lip; and

(b) be recessed into the wall (see Figure 10.2.20); and

(c) have the *water resistant* substrate materials of the wall pass down inside the upturn lip (see Figure 10.2.20).

Figure 10.2.20: Typical bath junctions

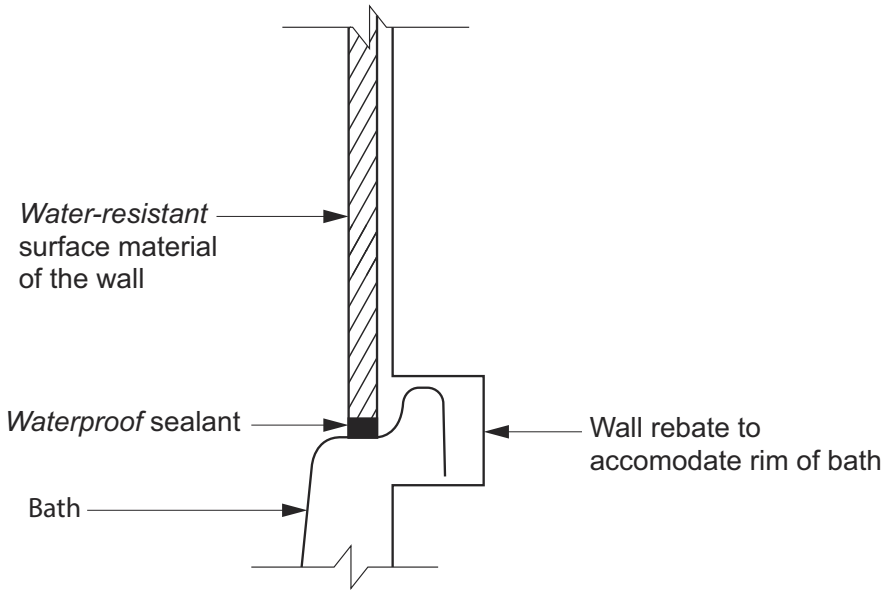

(a) Bath/wall junction - recessed

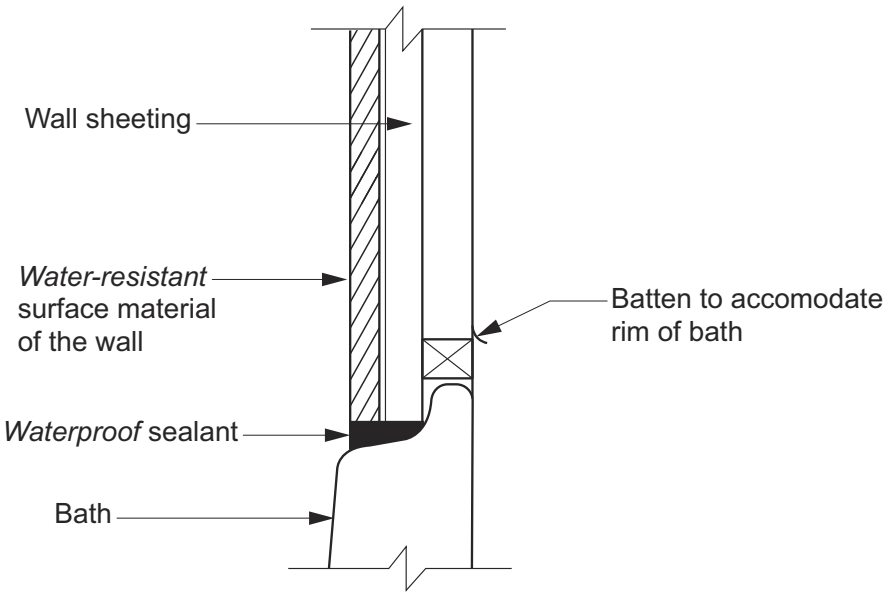

(b) Bath/wall junction - battened

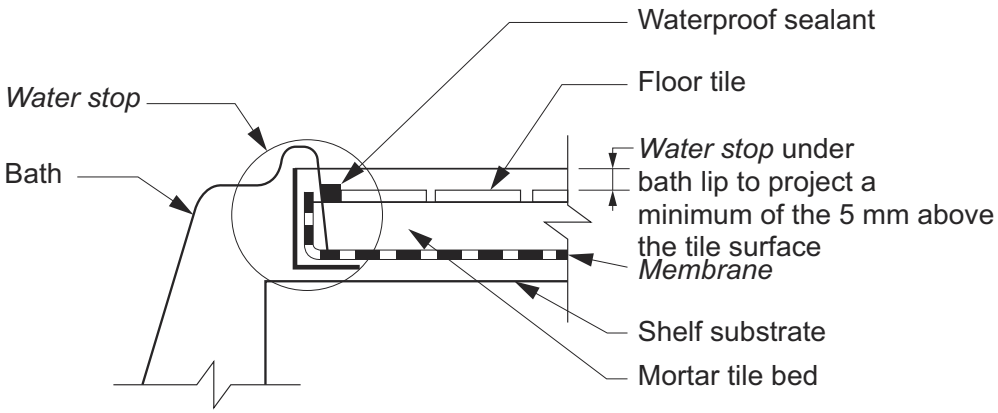

(c) Bath/shelf junction

Figure Notes

(1) Rebating of timber and steel framed walls must be in accordance with AS 1684 or NASH Standard Part 2 as appropriate.

(2) Where rebating of masonry walls is required, it must be accommodated for in the design in accordance with AS 3700.

(3) For diagram (c), where a *waterstop* cannot be provided, a Type 1 or Type 2 junction can be used with AS 3740.

10.2.21 Membrane installation for screed

[New for 2022]

Where a *screed* is used in conjunction with a *waterproof* membrane, the *waterproof* membrane can be installed either above or below the tile bed or *screed*.

10.2.22 Substrate surface preparation for application of membrane

[New for 2022]

The substrate surface area where a membrane is to be applied must—

(a) be clean and dust free; and

(b) free of indentations and imperfections.

10.2.23 Penetrations

[New for 2022]

Penetrations within *shower areas* must comply with the following:

(a) Penetrations for taps, shower nozzles and the like must be waterproofed by sealing with—

(i) sealants; or

(ii) proprietary flange systems; or

(iii) a combination of (i) and (ii).

(b) The spindle housing of the tap body must be able to be removed to enable replacement of the washer without damaging the seal.

(c) The following must be waterproofed:

(i) All penetrations due to mechanical fixings or fastenings of substrate materials.

(ii) Any penetration of the surface materials due to mechanical fixings or fastenings.

(iii) Recessed soap holders (niches) and the like.

(d) Tap and spout penetrations on horizontal surfaces surrounding baths and spas must be waterproofed by—

(i) sealing the tap body to the substrate with sealants; or

(ii) proprietary flange systems.

10.2.24 Flashings/junctions

[New for 2022]

Flashings must be installed in accordance with 10.2.2 to 10.2.5 and the following:

(a) Perimeter *flashing* to wall/floor junctions must have a—

(i) vertical leg that extends a minimum of 25 mm above the finished floor level, except across doorways; and

(ii) horizontal leg that has a minimum width of not less than 50 mm.

(b) Where a *water resistant* substrate is used in conjunction with a *water resistant* surface material, a *waterproof* sealant must be installed at the substrate junction at the wall/floor junction.

(c) Perimeter *flashings* at a floor level opening must comply with the following:

(i) Where the whole *wet area* floor is *waterproof*, at floor level openings, a *waterstop* must be installed that has a vertical leg finishing flush with the top of the finished floor level with the floor *membrane* being terminated to create a *waterproof* seal to the *waterstop* and to the perimeter *flashing* (see Figure 10.2.24).

(ii) In any other case, at a floor level opening a *waterstop* must be installed that has a vertical leg finishing flush with the top of the finished floor level and waterproofed to the perimeter *flashing*.

(d) A vertical *flashing*, either external to the *wet area* or internal, must extend a minimum of 1800 mm above the finished floor level.

Figure 10.2.24: Typical bathroom door details for whole bathroom waterproofing

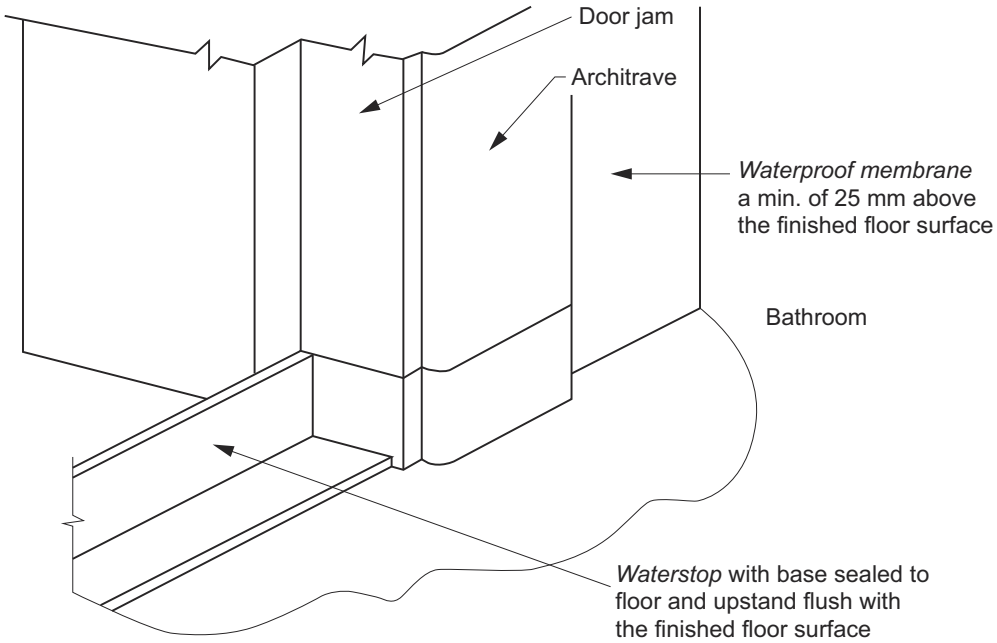

(a) After installation of architrave

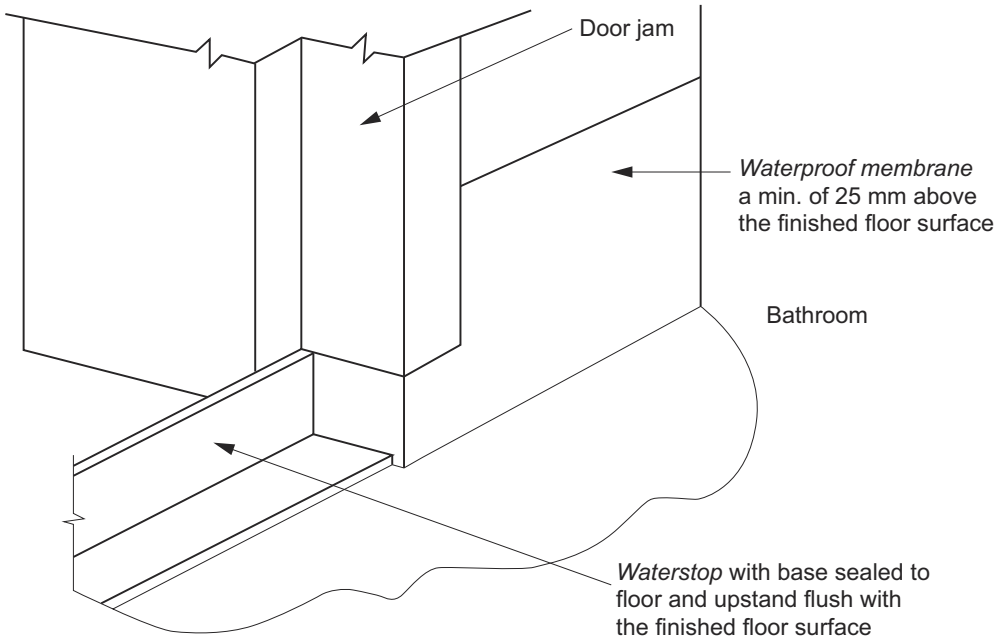

(b) Prior to installation of architrave

Explanatory Information

Vertical *flashing* may be used as follows:

(a) External vertical *flashing* may be used with external *membrane* systems and installed behind the wall sheeting or render. They must have legs of sufficient width to allow the wall sheeting or render to overlap by not less than 32 mm.

(b) Internal vertical *flashing* may be used with both external and internal *membrane* systems provided each leg has a minimum overlap of 40 mm to the wall sheeting or render and where used with—

(i) internal *membrane*, must extend vertically from the shower tray; and

(ii) external *membranes*, must overlap the top edge of the floor *waterproofing system* by not less than 20 mm; and

(iii) *preformed shower bases* or baths, must extend to the bottom edge of the wall sheeting or render.

10.2.25 Shower area floor membrane application

[New for 2022]

For hobless showers, or showers with hobs or stepdowns, the *membrane* must be applied over the floor and up the vertical face of the wall substrate to a minimum height of 1800 mm above the finished tile level of the floor.

10.2.26 Shower area membrane requirements for wall sheeting substrates

[New for 2022]

(1) Where wall sheeting is used with an external *membrane* system in a *shower area* it must be *waterproof* to prevent water movement by capillary action.

(2) Where *water resistant* plasterboard is used all cut edges that have the potential to be affected by water and moisture must be waterproofed, including the bottom edge over a *preformed shower base*.

10.2.27 Bond breaker installation for bonded membranes

[New for 2022]

(1) *Bond breakers* must be installed at all wall/wall, wall/floor, *hob*/wall junctions and at movement joints where the *membrane* is bonded to the substrate.

(2) *Bond breakers* must be of the type compatible with the flexibility class of the *membrane* to be used.

Explanatory Information

Typical details for *bond breaker* types are given in Explanatory Figure 10.2.27.

Figure 10.2.27 (explanatory): Typical bond breaker details

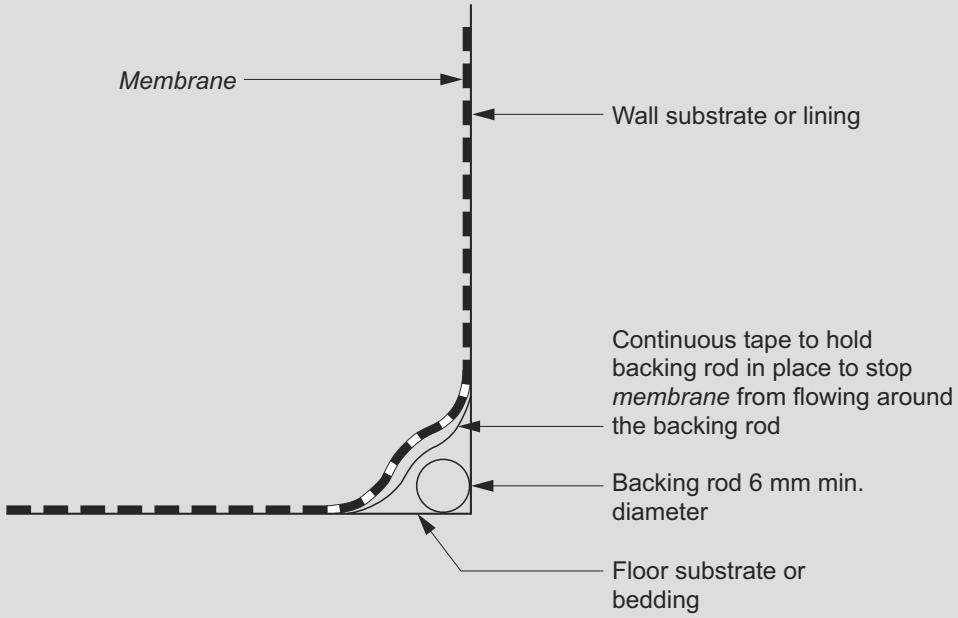

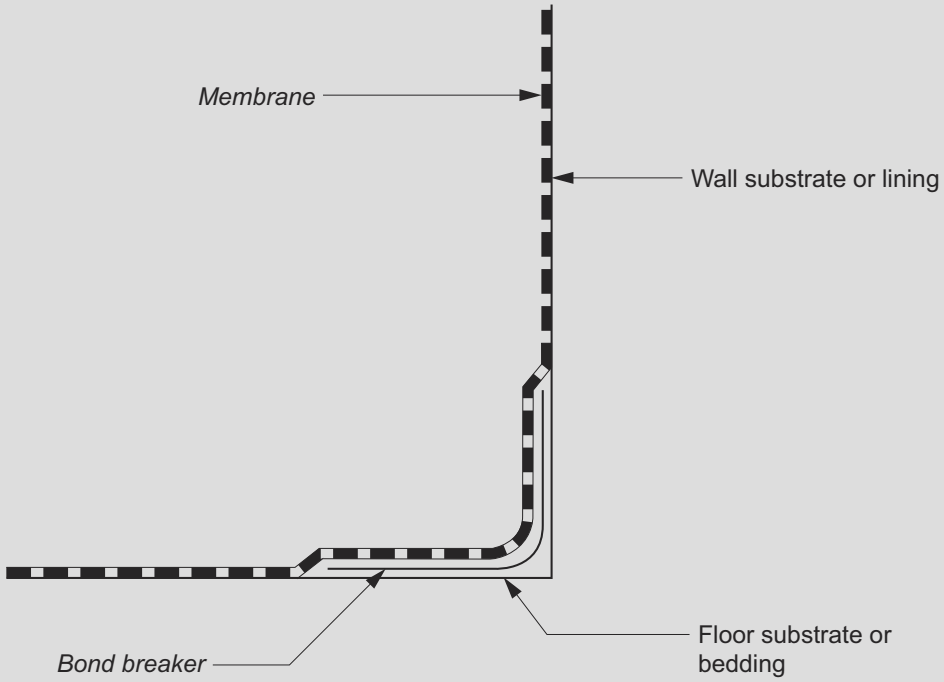

Figure Notes

(1) *Bond breakers* for Class I *membranes* (low extensibility) allow the *membrane* to flex rather than stretch.

(2) *Bond breakers* for Class II *membranes* (medium extensibility) allow the *membrane* to stretch. If a tape is used as a *bond breaker*, either the *membrane* must not bond to the tape or the tape must have elastic properties similar to the *membrane*.

(3) *Bond breakers* for Class III *membranes* (high extensibility) allow the *membrane* to have an even thickness.

10.2.28 Installation of internal membranes

[New for 2022]

(1) Where a shower has a *hob* the *membrane* must be brought over the top of the *hob*, down the outside face and

terminate not less than 50 mm onto the floor (see Figure 10.2.16).

(2) Where the shower has a *waterstop*, the *membrane* must be brought to the top of the finished floor, except where it is under a framed *shower screen* where it must terminate not less than 5 mm above the finished tile surface (see Figure 10.2.17 and Figure 10.2.18).

10.2.29 Membrane to drainage connection

[New for 2022]

(1) *Membrane* drainage connections in concrete floors must comply with one of the following:

(a) A *drainage flange* must be installed with the waterproofing *membrane* terminated at or in the *drainage flange* to provide a *waterproof* connection (see Figure 10.2.29).

(b) Where a *preformed shower base* is used, provision must be made to drain the tile bed and provide a *waterproof* connection to the drain.

(2) For *membrane* drainage connections in other floors, a *drainage flange* must be installed with the waterproofing *membrane* terminated at or in the *drainage flange* to provide a *waterproof* connection (see Figure 10.2.29).

(3) Where a *preformed shower base* is used, provision must be made to drain the tile bed and provide a *waterproof* connection to the drain.

(4) *Floor wastes* must be of sufficient height to suit the thickness of the tile and tile bed at the outlet position.

Figure 10.2.29: Typical membrane termination at drainage outlet

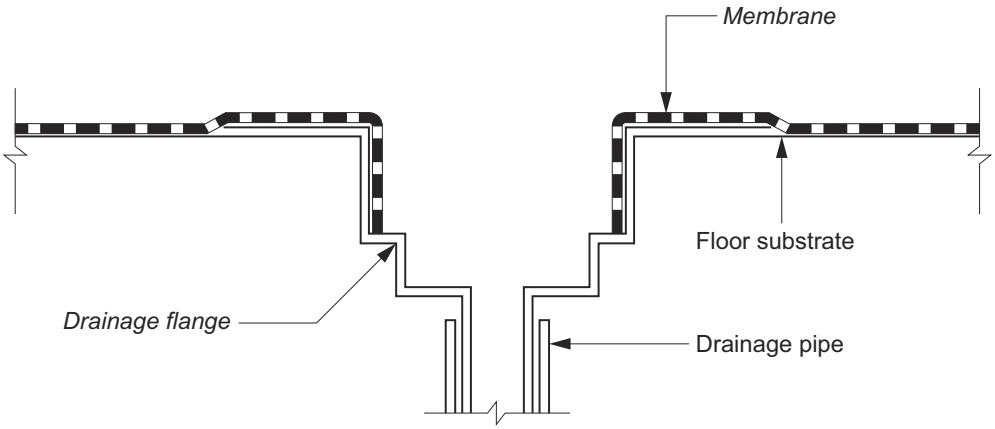

Explanatory Information: Drainage flanges

- For *membrane* drainage connections in concrete floors: *drainage flange* may be either cast into the concrete slab or set into the top surface of the concrete slab or the tile bed.
- For *membrane* drainage connections in other floors: *drainage flange* may be either set into the floor substrate or the tile bed.

10.2.30 Drainage riser connection

[New for 2022]

(1) Where a *preformed shower base* is used, the *drainage riser* must be connected to the tray with a *waterproof* joint.

(2) Where an in situ shower tray is used, the *membrane* must be able to form a permanent *waterproof* seal to the *drainage riser* or *drainage flange* (see Figure 10.2.29).

10.2.31 Door jambs on tiled floors

[New for 2022]

Where the bottom of a door jamb does not finish above the floor tiling, the portion of the door frame below the floor tiling

must be waterproofed to provide a continuous seal between the perimeter *flashing* and the *waterstop*.

10.2.32 Shower screens

[New for 2022]

(1) For a shower with a *hob*, the *shower screen* must be installed flush with the *shower area* side of the *hob* or overhang into the *shower area*.

(2) For a shower with a stepdown, the *shower screen* must be installed flush with the finished vertical surface of the stepdown of the *shower area*.

(3) For a shower without a *hob* or stepdown, the *shower screen* must incorporate or be mounted on an inverted channel, positioned over the top of the *waterstop*, that defines the *shower area*.

(4) For bath end walls and dividing walls abutting a shower, the *shower screen* must be positioned so that the bottom edge within the *shower area* is either flush with the outside edge of the bath or overhanging into the *shower area*.

Explanatory Information

A self-draining sub-sill is considered to be part of the *shower screen*.

SA 10.2.33

Part 10.3 Room heights

10.3.1 Height of rooms and other spaces

[2019: 3.8.2.2]

(1) Heights of rooms and other spaces (see Figure 10.3.1) must be not less than—

(a) in a *habitable room* excluding a kitchen — 2.4 m; and

(b) in a kitchen — 2.1 m; and

(c) in a corridor, passageway or the like — 2.1 m; and

(d) in a bathroom, shower room, laundry, *sanitary compartment*, airlock, pantry, storeroom, garage, car parking area or the like — 2.1 m; and

(e) in a room or space with a sloping ceiling or projections below the ceiling line within—

(i) a *habitable room*—

(A) in an attic — a height of not less than 2.2 m for at least two-thirds of the *floor area* of the room or space; and

(B) in other rooms — a height of not less than 2.4 m over two-thirds of the *floor area* of the room or space; and

(ii) a non-*habitable room* — a height of not less than 2.1 m for at least two-thirds of the *floor area* of the room or space; and

(f) in a stairway, ramp, *landing*, or the like — 2.0 m measured vertically above the nosing line of stairway treads or the floor surface of a ramp, *landing* or the like.

(2) For the purposes of (1)(e), when calculating the *floor area* of a room or space, any part that has a ceiling height of less than 1.5 m is not included.

Figure 10.3.1: Measurement of heights of rooms and other spaces

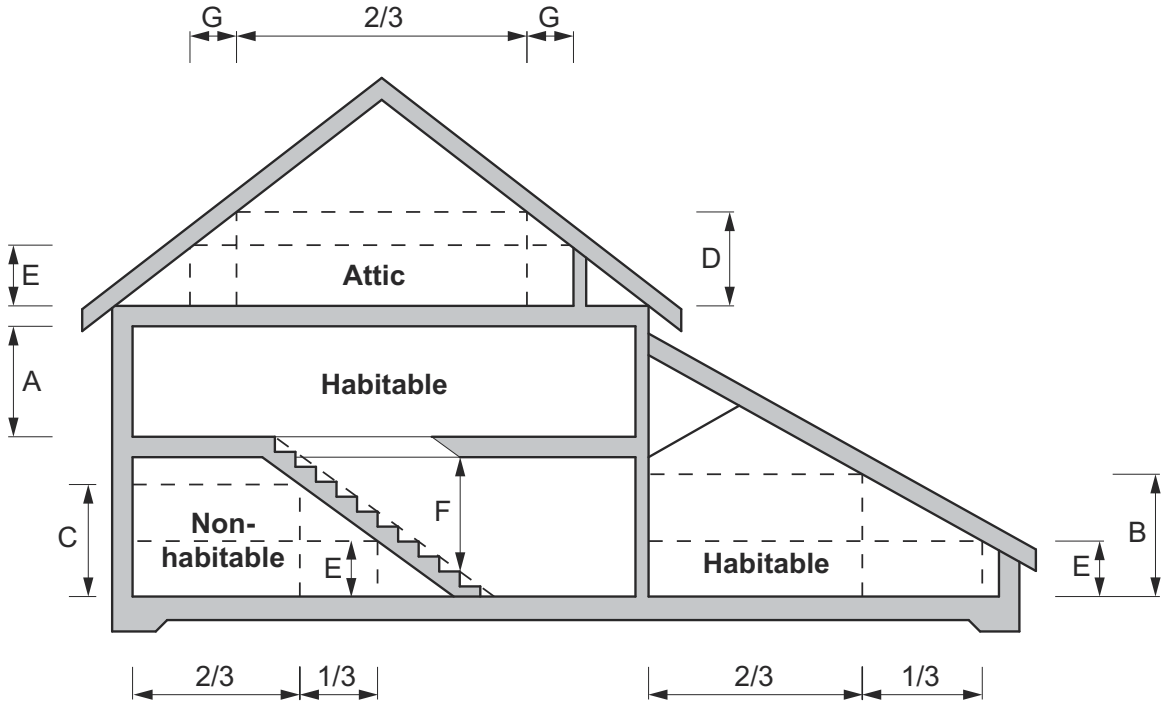

Figure Notes

The letters in the diagram represent the following minimum dimensions:

A = 2.4 m In a *habitable room* (excluding a kitchen).

B = 2.4 m In a *habitable room* with a sloping ceiling for at least two-thirds of the *floor area* of the room or space.

C = 2.1 m In a non-*habitable room* with a sloping ceiling for at least two-thirds of the *floor area* of the room or space.

D = 2.2 m In an attic with a sloping ceiling for at least two-thirds of the *floor area* of the room or space.

E = 1.5 m For the purpose of calculating the *floor area* of a room or space, any ceiling height of less than 1.5 m is excluded.

F = 2.0 m In a stairway (measured vertically above the nosing line).

The combined dimensions of G must not exceed one-third of the *floor area* (see E above) of the room or space.

Explanatory Information

- Where a room or space has no ceiling lining, the measurement is taken from the floor to the underside of the floor or roof above.
- In areas unlikely to be occupied for long periods, such as non-*habitable rooms*, a reduced height of 2.1 m is permitted.
- 10.3.1(1)(f) permits a reduced height of 2.0 m above stairways, ramps and *landings*, as these are used for transient purposes and therefore a reduction from the *required* height in corridors and rooms (2.1 and 2.4 m generally) will not adversely affect occupant safety, health or *amenity*

Part 10.4 Facilities

10.4.1 Required facilities

[2019: 3.8.3.2]

(1) A Class 1 building must be provided with—

(a) a kitchen sink and facilities for the preparation and cooking of food; and

(b) a bath or shower; and

(c) clothes washing facilities, comprising at least one washtub and space in the same room for a washing machine; and

(d) a closet pan; and

(e) a washbasin.

(2) If any of the facilities in (1) are detached from the main building, they must be set aside for the exclusive use of the occupants of the building.

Explanatory Information

- A kitchen sink or washbasin must not be counted as a laundry washtub. A laundry washtub is considered to provide the necessary means to dispose of waste water as *required* by H4P3(2).
- Installation requirements for certain electrical or gas cooking appliances may influence the selection of surrounding materials or the clearance to those materials.

10.4.2 Construction of sanitary compartments

[2019: 3.8.3.3]

The door to a fully enclosed *sanitary compartment* must—

(a) open outwards; or

(b) slide; or

(c) be readily removable from the outside of the compartment,

unless there is a clear space of at least 1.2 m, measured in accordance with Figure 10.4.2, between the closet pan within the *sanitary compartment* and the doorway.

Figure 10.4.2: Construction of sanitary compartments

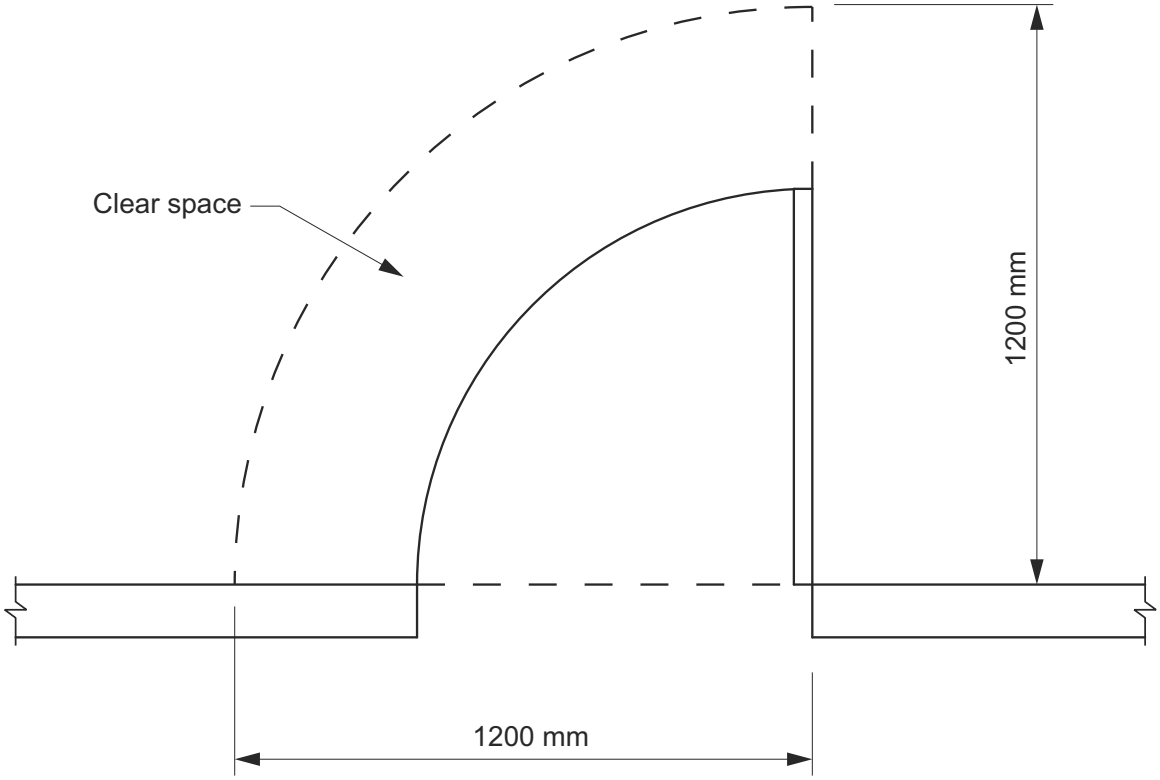

Explanatory Information

10.4.2 requires means of removing an unconscious occupant from a fully enclosed *sanitary compartment*. If the enclosure has gaps that are large enough to allow access for a person into the *sanitary compartment*, the compartment is not considered enclosed for the purpose of this clause.

TAS 10.4.3

Part 10.5 Light

10.5.1 Natural light

[2019: 3.8.4.2]

(1) Natural light must be provided to all *habitable rooms*, in accordance with the requirements of (2) to (5).

(2) Natural light must be provided by—

(a) *windows*, excluding *roof lights* that—

(i) have an aggregate light transmitting area measured exclusive of framing members, glazing bars or other obstructions of not less than 10% of the *floor area* of the room; and

(ii) are open to the sky or face a court or other space open to the sky or an open verandah, carport or the like; or

(b) *roof lights* that—

(i) have an aggregate light transmitting area measured exclusive of framing members, glazing bars or other obstructions of not less than 3% of the *floor area* of the room; and

(ii) are open to the sky; or

(c) a proportional combination of *windows* and *roof lights required* by (a) and (b).

(3) A *window required* to provide natural light that faces a boundary of an adjoining allotment must not be less than a horizontal distance of 900 mm from that boundary.

(4) Natural light to a room may come through one or more glazed panels or openings from an adjoining room (including an enclosed verandah) if—

(a) the glazed panels or openings have an aggregate light transmitting area of not less than 10% of the *floor area* of the room to which it provides light; and

(b) the adjoining room has—

(i) *windows*, excluding *roof lights* that—

(A) have an aggregate light transmitting area of not less than 10% of the combined *floor area* of both rooms; and

(B) are open to the sky or face a court or other space open to the sky or an open verandah, carport or the like; or

(ii) *roof lights* that—

(A) have an aggregate light transmitting area of not less than 3% of the combined *floor area* of both rooms; and

(B) are open to the sky; or

(iii) a proportional combination of *windows* and *roof lights required* by (i) and (ii).

(5) The areas specified in (4)(a) and (b) may be reduced as appropriate if direct natural light is provided from another source.

Notes

Figure 10.5.1 illustrates requirements of this provision.

Figure 10.5.1: Method of determining areas of openings for borrowed light

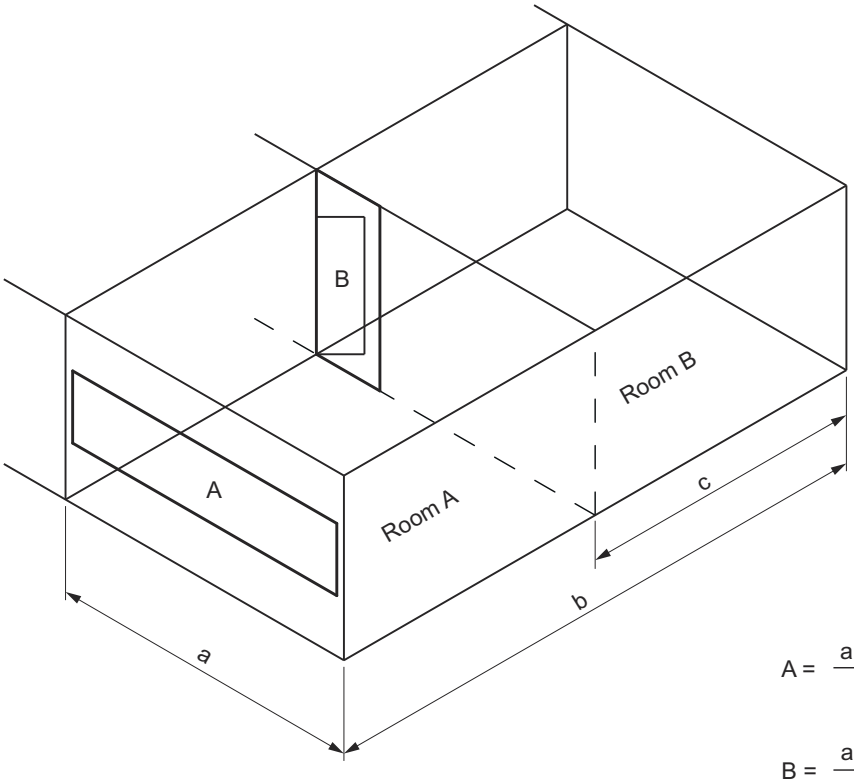

$$A = \frac{a \times b}{10} \ m^2$$

$$B = \frac{a \times c}{10} \ m^2$$

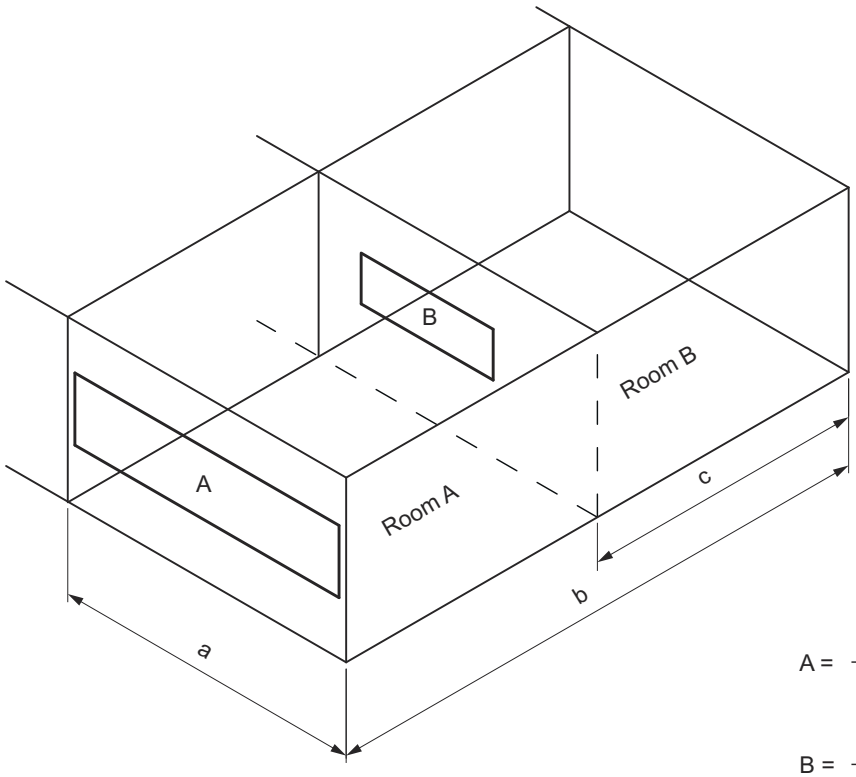

$$A = \frac{a \times b}{10} \ m^2$$

$$B = \frac{a \times c}{10} \ m^2$$

Explanatory Information: Explanatory Figure 10.5.1

A *roof light* generally receives greater exposure to sunlight than a *window* because of its orientation to the sky and consequently, the size of a *roof light* as a percentage of the *floor area* served is permitted to be smaller than for a

window serving the same *floor area*. This is explained in Explanatory Figure 10.5.1, below.

Figure 10.5.1 (explanatory): Method for determining proportional combination of windows and roof lights

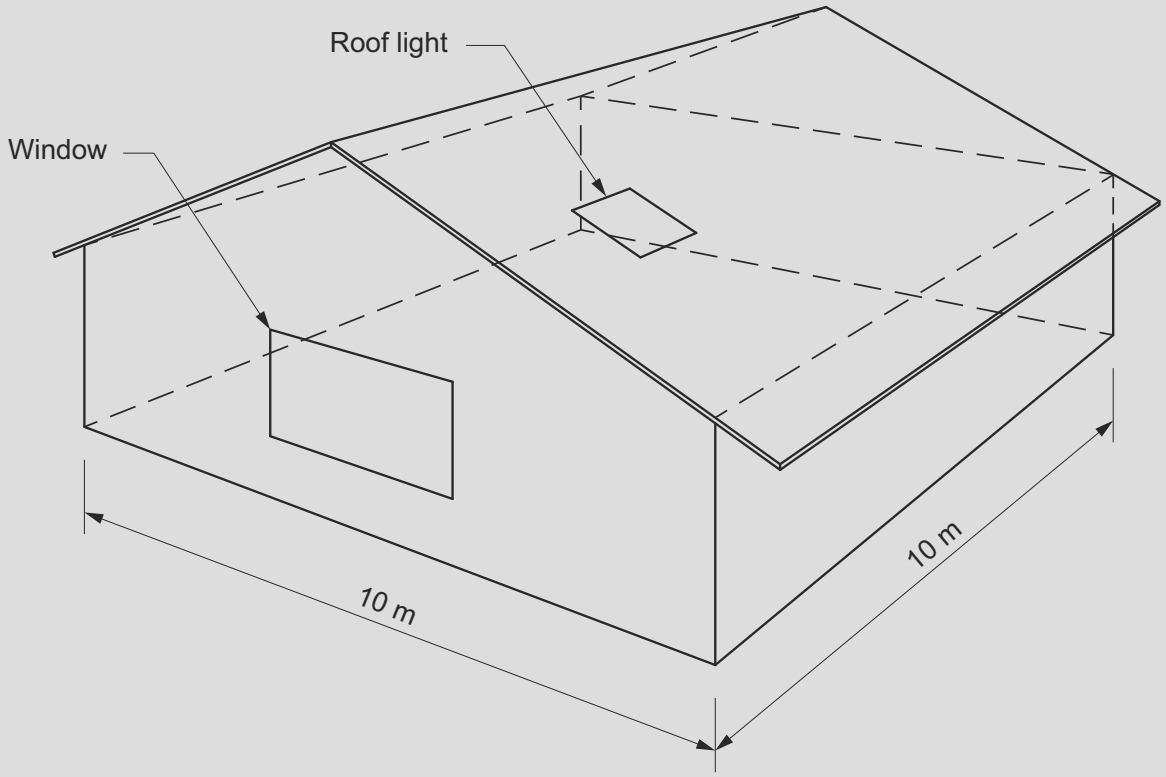

Figure Notes

(1) Area of the room which *requires* natural light is 100 m^2.

(2) No natural light is borrowed from adjoining rooms.

Explanatory Information: General requirements for Explanatory Figure 10.5.1

Required window(s) to provide natural light must have a light transmitting area of at least 10% of the *floor area*.

10% of 100 m^2 = 10 m^2

Or, *roof light(s)* to provide natural light must have a light transmitting area of at least 3% of the *floor area*.

3% of 100 m^2 = 3 m^2

In the formula shown in the next Explanatory Information box, 3% of the *floor area* is expressed as the fraction 0.03 and 10% of the *floor area* is expressed as the fraction 0.1.

Explanatory Information: Calculations for Explanatory Figure 10.5.1

Formula — for the area of *window(s) required* to compensate for *roof light(s)* short fall:

- Area of room covered by the *roof light(s)* = (Area of *roof light(s)*) / 0.03
- *Required window(s)* area = [(*floor area*) – (Area covered by the *roof light(s)*)] / 10

Area of *window(s) required* to compensate for *roof light(s)* short fall:

If the *roof light(s)* = 1 m²

- Area of room covered by the *roof light(s)* = (1 m^2 / 0.03) = 33.33 m^2.
- *Required window(s)* area = (100 m^2 – 33.33 m^2) / 10 = 6.67 m^2.

Formula — for the area of *roof light(s) required* to compensate for *window(s)* short fall:

- Area of room covered by the *window(s)* = (Area of *window(s)*) / 0.1.
- *Required roof light(s)* area = [(*floor area*) – (Area covered by the *window(s)*)] / 33.33.

Area of *roof light(s) required* to compensate for *window(s)* short fall:

If the *window(s)* = 5 m².

- Area of room covered by the *window(s)* = (5 m^2 / 0.1) = 50 m^2.
- *Required roof light(s)* area = (100 m^2 – 50 m^2) / 33.33 m^2 = 1.5 m^2.

Notes:

(1) For the purposes of this example a *window* excludes a *roof light*.

(2) The same proportional calculation principle applies if—

(a) two or more *windows* are used; or

(b) two or more *roof lights* are used.

Explanatory Information: Natural light borrowed from another source

- Direct natural light provided from another source is intended to mean light from a *window* or *roof light* in the subject room. As the provision relates to natural light obtained from an adjoining room, 'another source' refers to direct natural light provided to the subject room which does not meet the *required* allowance of either 10% or 3% of the *floor area* of that room. By not meeting the *required* amount of natural light, the 'direct natural light from another source' can be used as a supplement to the natural light *required* from an adjoining room.
- To borrow natural light from another room, 10.5.1(4)(a) allows light to pass through a glazed panel(s) or opening(s) from an adjoining room, which under 10.5.1(4)(b), must have *windows*, *roof lights* or a combination of windows and *roof lights* of a minimum size in proportion to the combined floor areas of both rooms. The minimum size of the glazed panel(s) or opening(s), and the minimum size of the *window* to the adjoining room are illustrated in Figure 10.5.1.
- If a doorway is used as an opening to obtain natural light, it must do so when in the closed position (see Figure 10.5.1).

10.5.2 Artificial lighting

[2019: 3.8.4.3]

Sanitary compartments, bathrooms, shower rooms, airlocks and laundries must be provided with artificial lighting if natural light in accordance with the relevant provisions of 10.5.1 is not available—

(a) at a rate of not less than one light fitting per 16 m^2 of *floor area*; or

(b) in accordance with AS/NZS 1680.0.

Part 10.6 Ventilation

10.6.1 Application

[New for 2022]

(1) Part 10.6 applies subject to the limitations set out at H4D7.

(2) Part 10.6 need not be complied with if H4D7(1) is complied with.

Explanatory Information

The requirements of this Part are to be read in conjunction with the condensation management requirements in Part 10.8 and the ceiling fan requirements in Part 13.5. However, it should be noted that Part 13.5 does not apply in all States and Territories.

10.6.2 Ventilation requirements

[2019: 3.8.5.2]

Ventilation must be provided to a *habitable room*, *sanitary compartment*, bathroom, shower room, laundry and any other room occupied by a person for any purpose by any of the following means:

(a) Openings, *windows*, doors or other devices which can be opened—

(i) with a ventilating area not less than 5% of the *floor area* of the room *required* to be ventilated; and

(ii) open to—

(A) a suitably sized court, or space open to the sky; or

(B) an open verandah, carport, or the like; or

(C) an adjoining room in accordance with (b).

(b) Natural ventilation to a room may come through a *window*, opening, door or other device from an adjoining room (including an enclosed verandah) if—

(i) the room to be ventilated or the adjoining room is not a *sanitary compartment*; and

(ii) the *window*, opening, door or other device has a ventilating area of not less than 5% of the *floor area* of the room to be ventilated; and

(iii) the adjoining room has a *window*, opening, door or other device with a ventilating area of not less than 5% of the combined *floor areas* of both rooms; and

(iv) the ventilating areas specified may be reduced as appropriate if direct natural ventilation is provided from another source (See Figure 10.6.2).

(c) An exhaust fan or other means of mechanical ventilation may be used to ventilate a *sanitary compartment*, laundry, kitchen or bathroom, or where mechanical ventilation is provided in accordance with 10.6.3(b), provided contaminated air exhausts comply with 10.8.2.

Figure 10.6.2: Method of determining areas of openings for borrowed ventilation

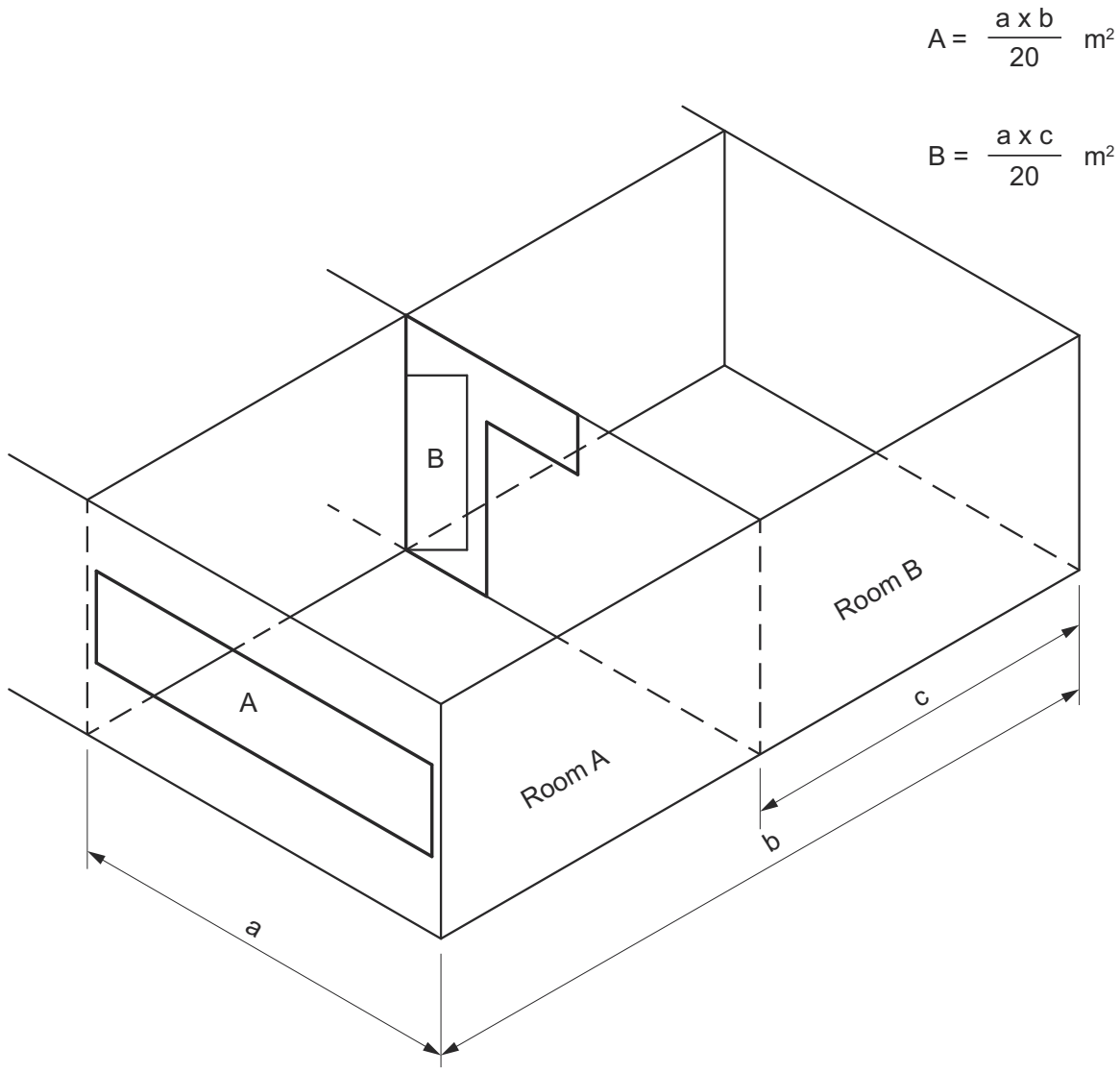

Explanatory Information

The ventilating area of a *window* is measured as the size of the openable sash of the *window*. This is the case regardless of the type of *window*, i.e. whether it is an awning, casement or sliding *window* and irrespective of the restrictions on the openable sash.

10.6.2(b) permits a room's *required* ventilation to be 'borrowed' from an adjoining room, i.e. an adjoining room's ventilation can be used to help make up the total amount of ventilation *required*.

The use of borrowed ventilation is acceptable if the provisions of 10.6.2(b) are applied to the subject room and to the total area of each relevant room.

10.6.3 Location of sanitary compartments

[2019: 3.8.5.3]

A *sanitary compartment* must not open directly into a kitchen or pantry unless—

(a) access is by an airlock, hallway or other room, (see Figure 10.6.3); or

(b) the *sanitary compartment* is provided with an exhaust fan or other means of mechanical exhaust ventilation.

Figure 10.6.3: Acceptable location of non mechanically ventilated sanitary compartment

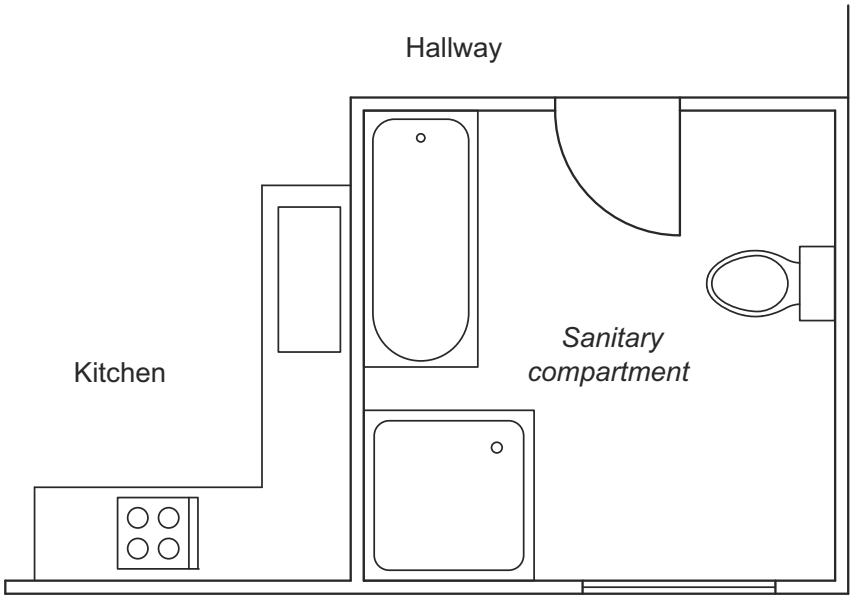

Part 10.7 Sound insulation

NT Part 10.7

10.7.1 Sound insulation requirements

[2019: 3.8.6.2]

(1) A *separating wall* between Class 1 buildings, or a wall that separates a Class 1 building from a Class 10a building which is not associated with the Class 1 building must—

(a) have an $R_w + C_{tr}$ (airborne) not less than 50; and

(b) be of *discontinuous construction* if it separates a bathroom, *sanitary compartment*, laundry or kitchen in one Class 1 building from a *habitable room* (other than a kitchen) in an adjoining Class 1 building (see Figure 10.7.1).

(2) A wall *required* to have sound insulation must continue to—

(a) the underside of the roof above; or

(b) a ceiling that provides the sound insulation *required* for the wall.

Figure 10.7.1: Required airborne and impact sound insulation — Plan view

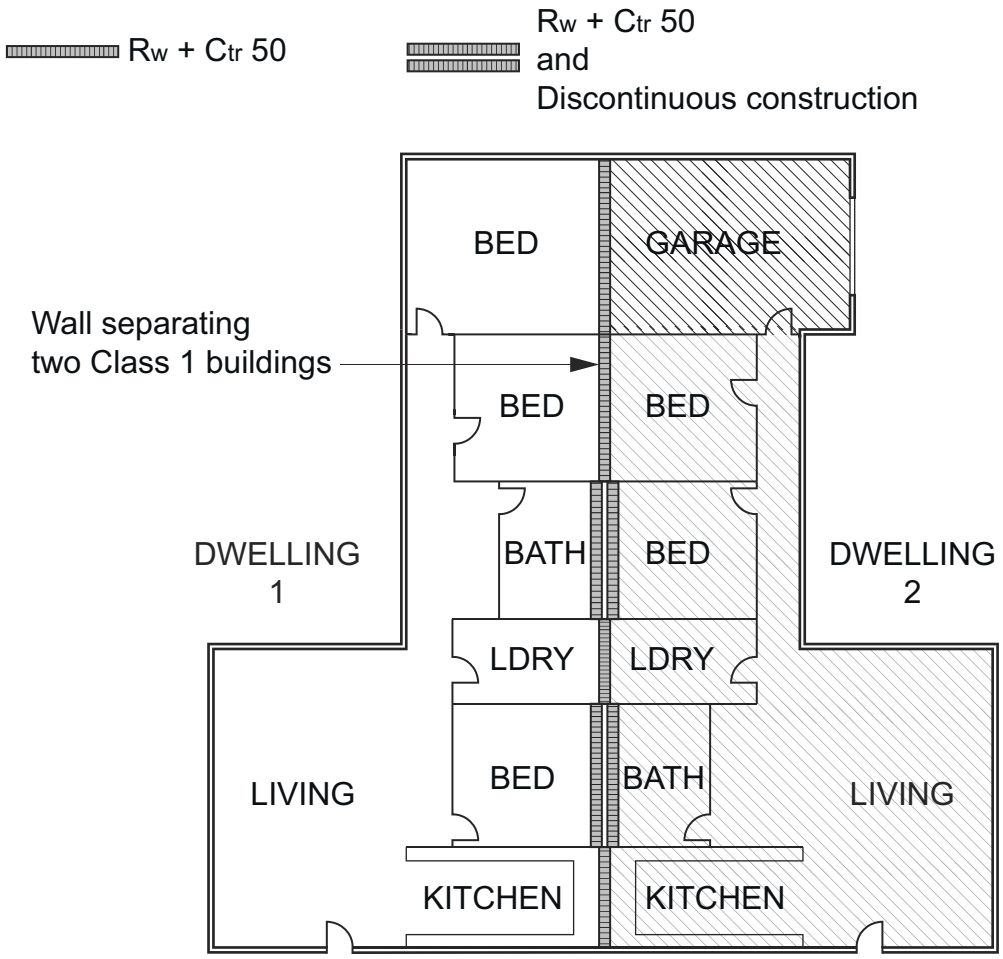

Explanatory Information

Insulation to reduce both airborne and impact noise transmission is *required* for parts of a wall that are common to adjoining Class 1 buildings but not parts of a wall located in the subfloor.

10.7.2 Determination of airborne sound insulation ratings

[2019: 3.8.6.3]

The Rw + Ctr sound insulation rating *required* by 10.7.1(1)(a) must—

(a) be determined in accordance with AS/NZS ISO 717.1, using results from laboratory measurements; or

(b) comply with 10.7.5 to 10.7.8 and the relevant provisions of 10.7.3.

Explanatory Information

R_w is a measure of airborne sound insulation. C_{tr} is a spectrum adjustment factor that adjusts for low frequency sound levels. C_{tr} has been chosen in recognition of the problems caused by the high bass frequency outputs of modern home theatre systems and music reproduction equipment used by occupants of Class 1 buildings.

The wall configurations described in 10.7.5 to 10.7.8 are typical examples. Other proprietary methods are available via testing to AS/NZS ISO 717.1 for meeting the R_w + C_{tr} requirements of 10.7.1.

10.7.3 Construction of sound insulated walls

[2019: 3.8.6.4]

To achieve the appropriate level of sound insulation, walls must be constructed as follows:

(a) Stud wall junction — junctions of sound insulated walls with any perimeter walls and roof cladding must be sealed in accordance with Figure 10.7.3a.

(b) Masonry — units must be laid with all joints filled solid, except for articulation joints complying with 5.6.8, including those between the masonry and any adjoining construction.

(c) Concrete panels — must have joints between panels and any adjoining construction filled solid.

(d) Plasterboard sheeting —

(i) If two layers are *required*, the second layer joints must not coincide with those of the first layer (see Figure 10.7.3b).

(ii) Joints between sheets including the outer layer or between sheets and any adjoining construction must be taped and filled solid.

(e) Steel framed construction — steel framing and perimeter members must be installed as follows:

(i) Steel framing members must be not less than 0.6 mm thick.

(ii) Studs must be not less than 63 mm in depth unless another depth is specified in 10.7.5 to 10.7.8.

(iii) All steel members at the perimeter of the wall must be securely fixed to the adjoining structure and the joints must be caulked so that there are no voids between the steel members and the wall.

(f) Timber-framed construction — timber studs and perimeter members must be installed as follows:

(i) Noggings and like members must not bridge between studs supporting different wall leaves.

(ii) All timber members at the perimeter of the wall must be securely fixed to the adjoining structure and the joints must be caulked so there are no voids between the timber members and the wall.

Figure 10.7.3a: Sound insulation between buildings — Stud wall junctions

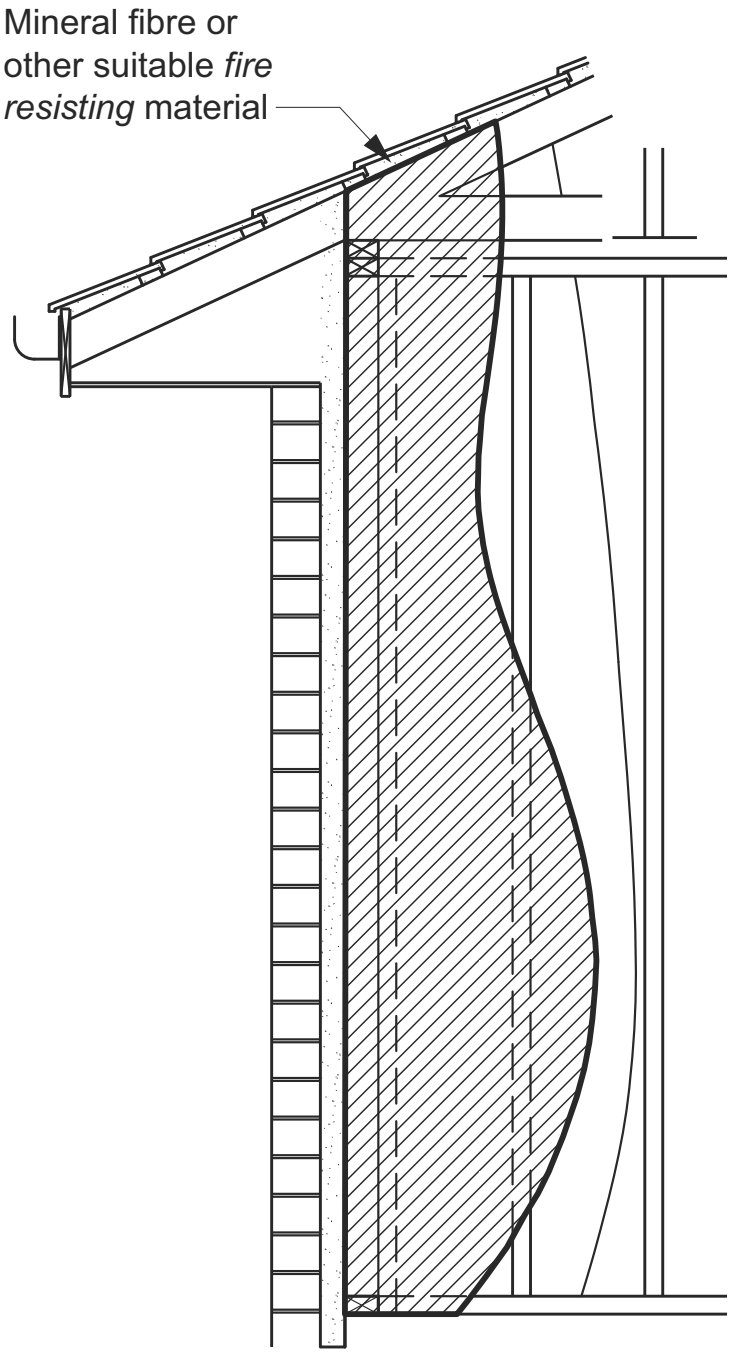

(a) Section

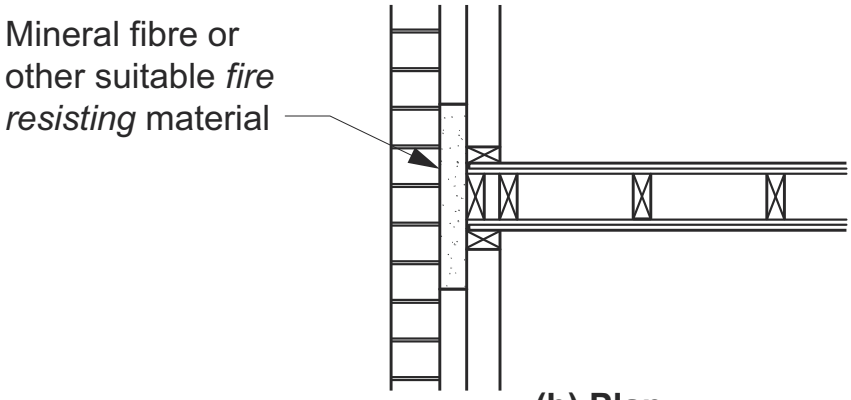

(b) Plan

Figure 10.7.3b: Typical installation of plaster sheets for sound insulation

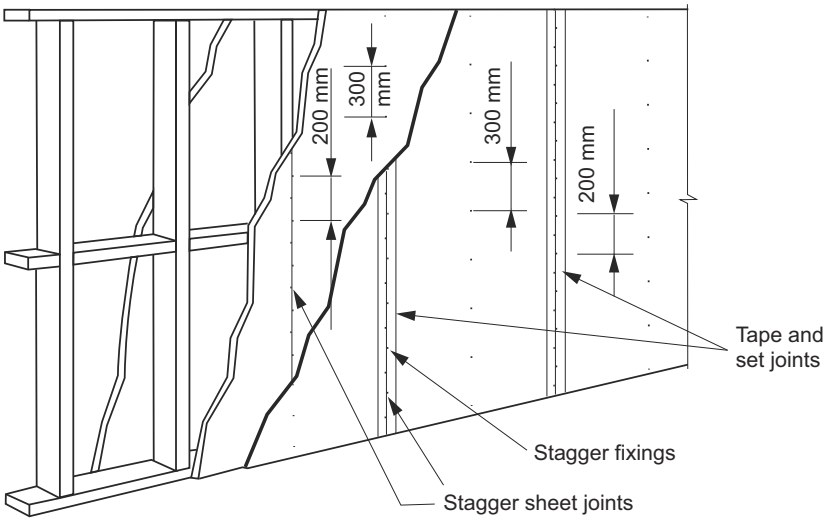

(a) Second layer positioned vertically

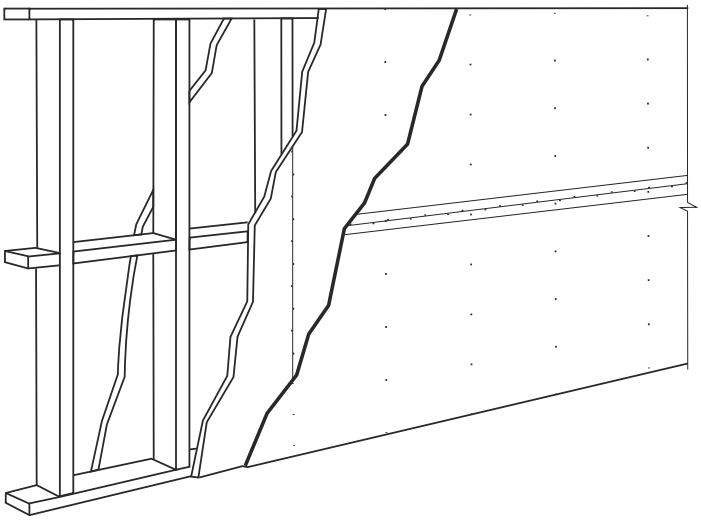

(b) Second layer positioned horizontally

10.7.4 Services

[2019: 3.8.6.5]

(1) Services must not be chased into concrete or masonry *separating walls*.

(2) If a duct, soil, waste, water supply or stormwater pipe is located in a *separating wall*—

(a) a door or panel providing access to a duct or pipe *required* to be separated must—

(i) not open into any *habitable room*, other than a kitchen; and

(ii) in any other part must be firmly fixed so as to overlap the frame or rebate of the frame by not less than 10

mm and be constructed of—

(A) wood, plasterboard or blockboard not less than 33 mm thick; or

(B) compressed fibre reinforced cement sheeting not less than 9 mm thick; or

(C) other suitable material with a mass per unit area not less than 24.4 kg/m^2; and

(b) in the case of a water supply pipe, it must—

(i) only be installed in *discontinuous construction*; and

(ii) in the case of a water supply pipe that serves one dwelling, not be fixed to the wall leaf on the side of any other dwelling and have a clearance not less than 10 mm to the other wall leaf.

(3) Electrical outlets must be offset from each other—

(a) in masonry walling, not less than 100 mm; and

(b) in timber or steel-framed walling, not less than 300 mm.

10.7.5 Acceptable forms of construction for masonry walls

[2019: Table 3.8.6.1a]

(1) Acceptable forms of construction for masonry walls are set out in (2) to (6).

(2) Two leaves of 110 mm clay brick masonry with—

(a) a *cavity* not less than 50 mm between leaves; and

(b) 50 mm thick glass wool insulation with a density of 11 kg/m^3 or 50 mm thick polyester insulation with a density of 20 kg/m^3 in the *cavity*,

has an $R_w + C_{tr}$ of not less than 50, if constructed in accordance with Figure 10.7.5a.

(3) Two leaves of 110 mm clay brick masonry with—

(a) a *cavity* not less than 50 mm between leaves; and

(b) 13 mm cement render on each outside face,

has an $R_w + C_{tr}$ of not less than 50, if constructed in accordance with Figure 10.7.5b.

(4) A single leaf of 110 mm clay brick masonry with—

(a) a row of 70 mm x 35 mm timber studs or 64 mm steel studs at 600 mm centres, spaced 20 mm from the masonry wall; and

(b) 50 mm thick mineral insulation or glass wool insulation with a density of 11 kg/m^3 positioned between studs; and

(c) one layer of 13 mm plasterboard fixed to outside face of studs and outside face of masonry,

has an $R_w + C_{tr}$ of not less than 50, if constructed in accordance with Figure 10.7.5c.

(5) A single leaf of 90 mm clay brick masonry with—

(a) a row of 70 mm x 35 mm timber studs or 64 mm steels studs at 600 mm centres, spaced 20 mm from each face of the masonry wall; and

(b) 50 mm thick mineral insulation or glass wool insulation with a density of 11 kg/m^3 positioned between studs in each row; and

(c) one layer of 13 mm plasterboard fixed to studs on each outside face,

has an $R_w + C_{tr}$ of not less than 50, if constructed in accordance with Figure 10.7.5d.

(6) A single leaf of 220 mm brick masonry with 13 mm cement render on each face has an $R_w + C_{tr}$ of not less than 50, if constructed in accordance with Figure 10.7.5e.

Figure 10.7.5a: Two leaves of 110 mm clay brick masonry (method 1)

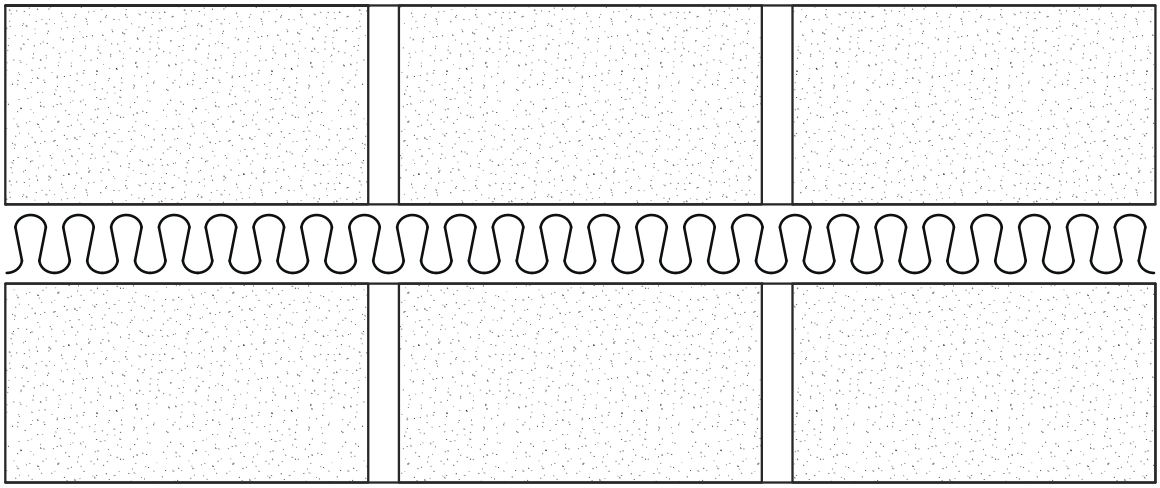

Figure 10.7.5b: Two leaves of 110 mm clay brick masonry (method 2)

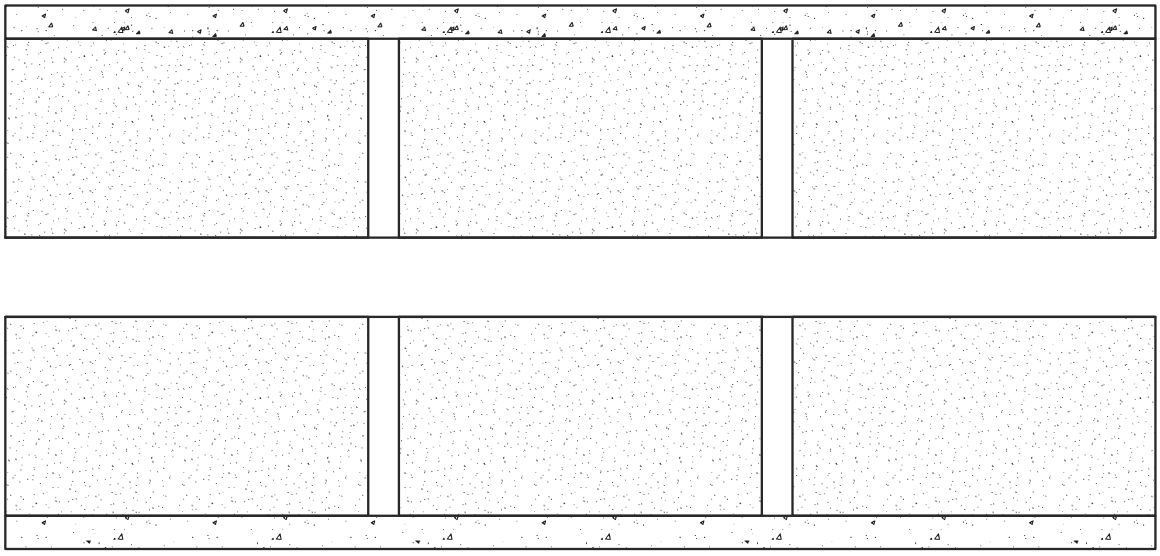

Figure 10.7.5c: Single leaf of 110 mm clay brick masonry

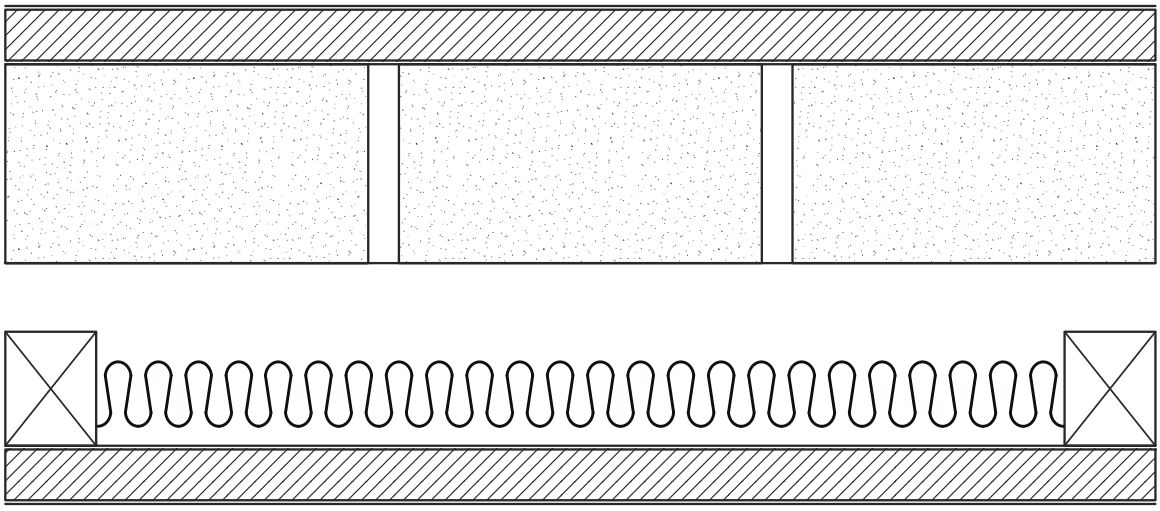

Figure 10.7.5d: Single leaf of 90 mm clay brick masonry

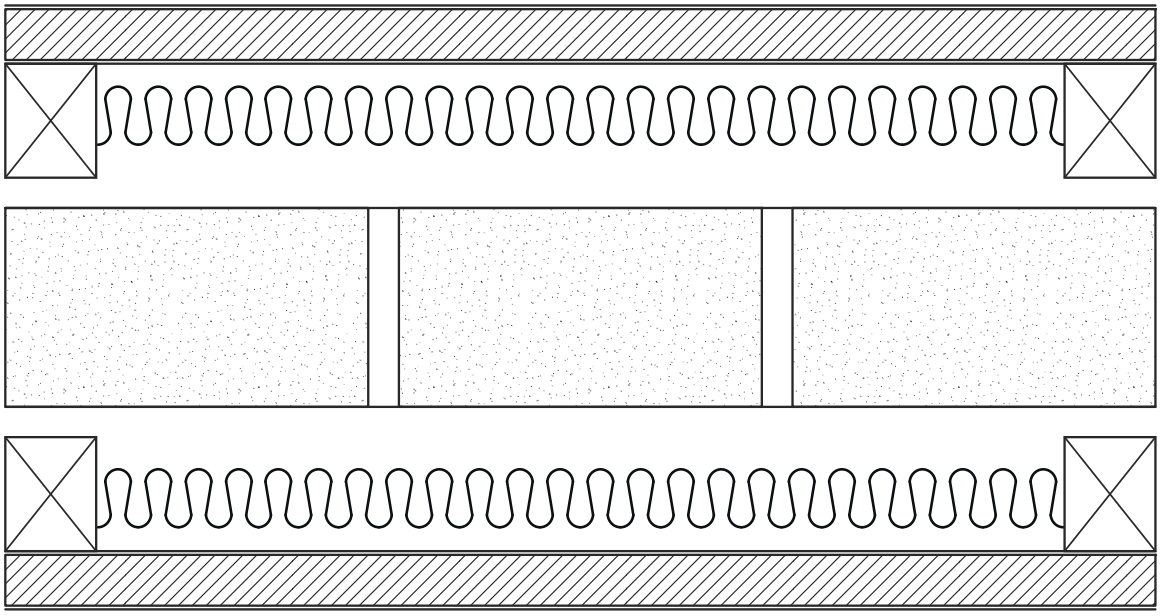

Figure 10.7.5e: Single leaf of 220 mm brick masonry with 13 mm cement render on each face

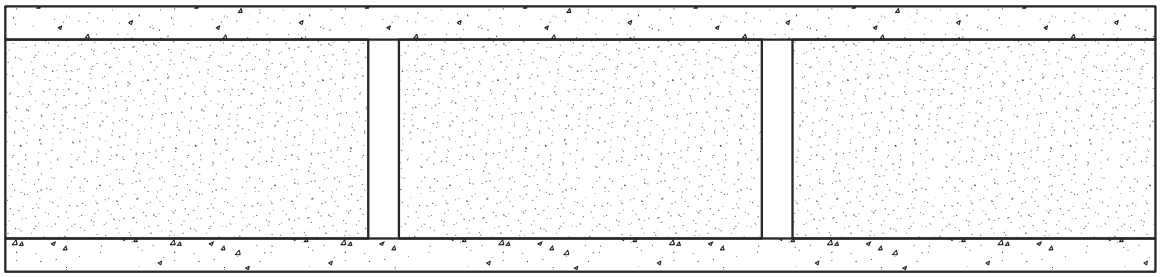

10.7.6 Acceptable forms of construction for concrete walls

[2019: Table 3.8.6.1b]

(1) Acceptable forms of construction for concrete walls are set out in (2) to (5).

(2) 150 mm thick plain off form concrete, has an $R_w + C_{tr}$ of not less than 50, if constructed in accordance with Figure 10.7.6a.

(3) 200 mm thick concrete panel with one layer of 13 mm plasterboard or 13 mm cement render on each face, has an $R_w + C_{tr}$ of not less than 50, if constructed in accordance with Figure 10.7.6b.

(4) A 100 mm thick concrete panel with—

(a) a row of 64 mm steel studs at 600 mm centres, spaced 25 mm from the concrete panel; and

(b) 80 mm thick polyester insulation or 50 mm thick glass wool insulation with a density of 11 kg/m^3, positioned between studs; and

(c) two layers of 13 mm plasterboard fixed to the outside face of studs and one layer of 13 mm plasterboard fixed to the outside face of the concrete panel,

has an $R_w + C_{tr}$ of not less than 50, if constructed in accordance with Figure 10.7.6c.

(5) A 125 mm thick concrete panel with—

(a) a row of 64 mm steel studs at 600 mm centres, spaced 20 mm from the concrete panel; and

(b) 70 mm polyester insulation with a density of 9 kg/m^3, positioned between studs; and

(c) one layer of 13 mm plasterboard fixed to the outside face of the studs,

has an $R_w + C_{tr}$ of not less than 50, if constructed in accordance with Figure 10.7.6d.

Figure 10.7.6a: 150 mm thick plain off form concrete

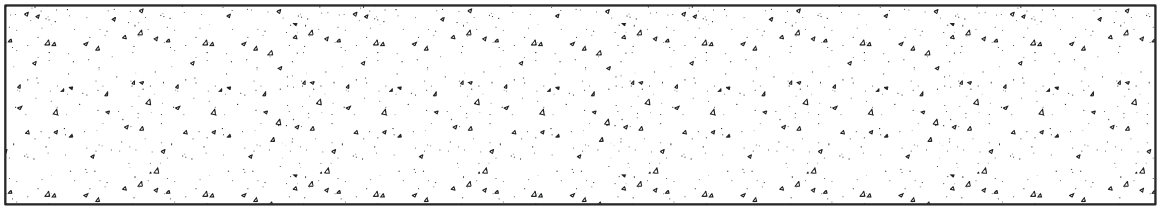

Figure 10.7.6b: 200 mm thick concrete panel

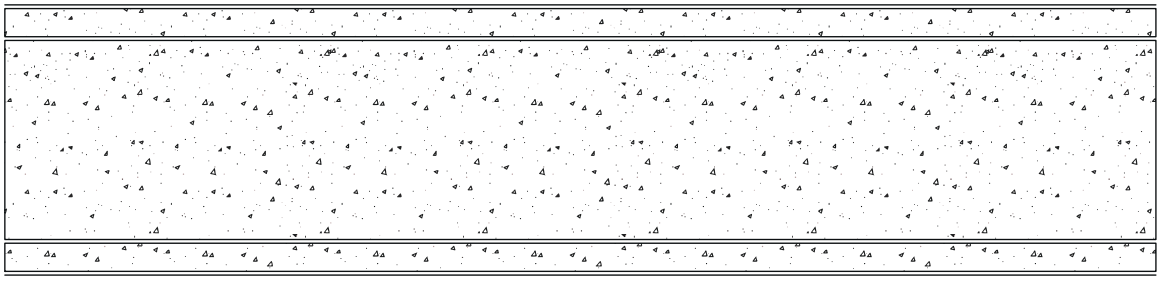

Figure 10.7.6c: 100 mm thick concrete panel

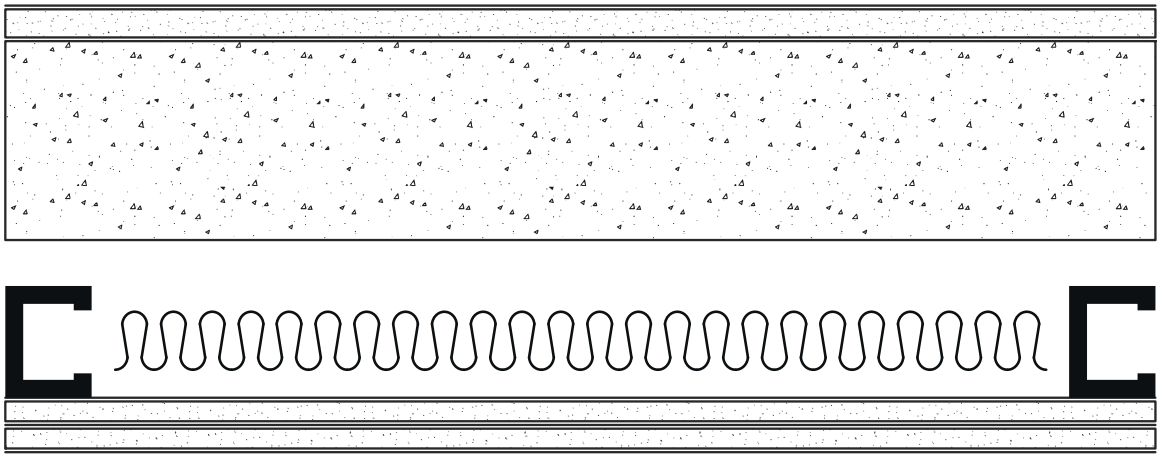

Figure 10.7.6d: 125 mm thick concrete panel

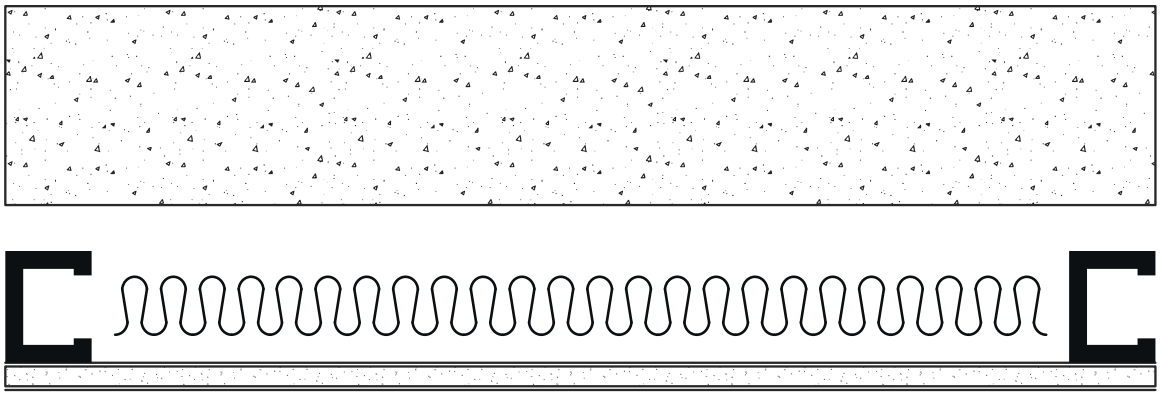

10.7.7 Acceptable forms of construction for autoclaved aerated concrete walls

[2019: Table 3.8.6.1c]

(1) Acceptable forms of construction for autoclaved aerated concrete walls are set out in (2) to (4).

(2) A 75 mm thick autoclaved aerated concrete wall panel with—

(a) a row of 64 mm steel studs at 600 mm centres, spaced 20 mm from the autoclaved aerated concrete wall panel;

and

(b) 75 mm thick glass wool insulation with a density of 11 kg/m^3 positioned between studs; and

(c) one layer of 10 mm moisture resistant plasterboard or 13 mm fire protective grade plasterboard fixed to outside face of studs and outside face of autoclaved aerated concrete wall panel,

has an $R_w + C_{tr}$ of not less than 50, if constructed in accordance with Figure 10.7.7a.

(3) A 75 mm thick autoclaved aerated concrete wall panel with—

(a) a row of 64 mm steel studs at 600 mm centres, spaced 35 mm from the autoclaved aerated concrete panel wall; and

(b) 28 mm metal furring channels fixed to the outside face of the autoclaved aerated concrete wall panel, with 50 mm thick polyester insulation with a density of 9 kg/m^3 positioned between furring channels and one layer of 13 mm fire protective grade plasterboard fixed to furring channels; and

(c) 105 mm thick glass wool insulation with a density of 7 kg/m^3 positioned between studs; and

(d) one layer of 13 mm fire protective grade plasterboard fixed to the outside face of the studs,

has an $R_w + C_{tr}$ of not less than 50, if constructed in accordance with Figure 10.7.7b.

(4) Two leaves of 75 mm autoclaved aerated concrete wall panel with—

(a) a *cavity* not less than 30 mm between panels containing 50 mm glass wool insulation with a density of 11 kg/m^3; and

(b) one layer of 10 mm plasterboard fixed to outside face of each panel,

has an $R_w + C_{tr}$ of not less than 50, if constructed in accordance with Figure 10.7.7c.

Figure 10.7.7a: 75 mm thick autoclaved aerated concrete wall panel (method 1)

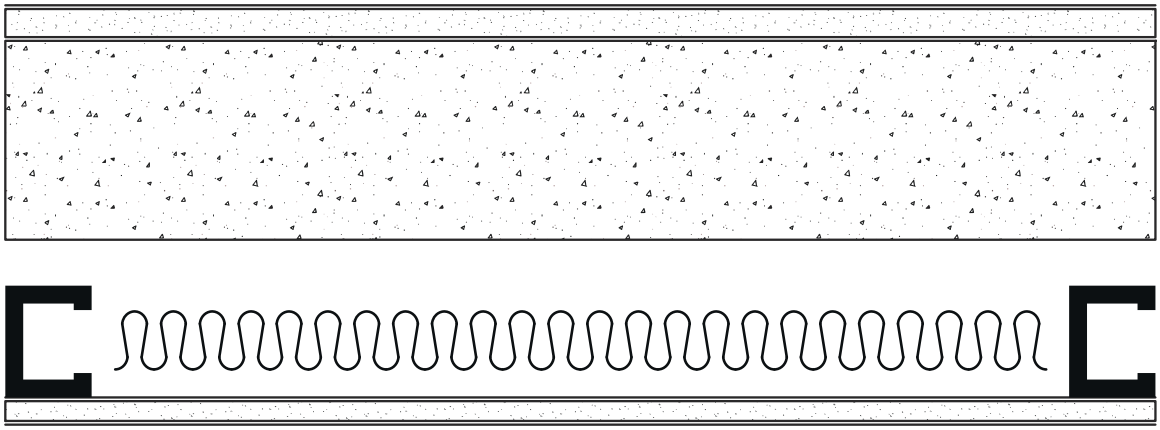

Figure 10.7.7b: 75 mm thick autoclaved aerated concrete wall panel (method 2)

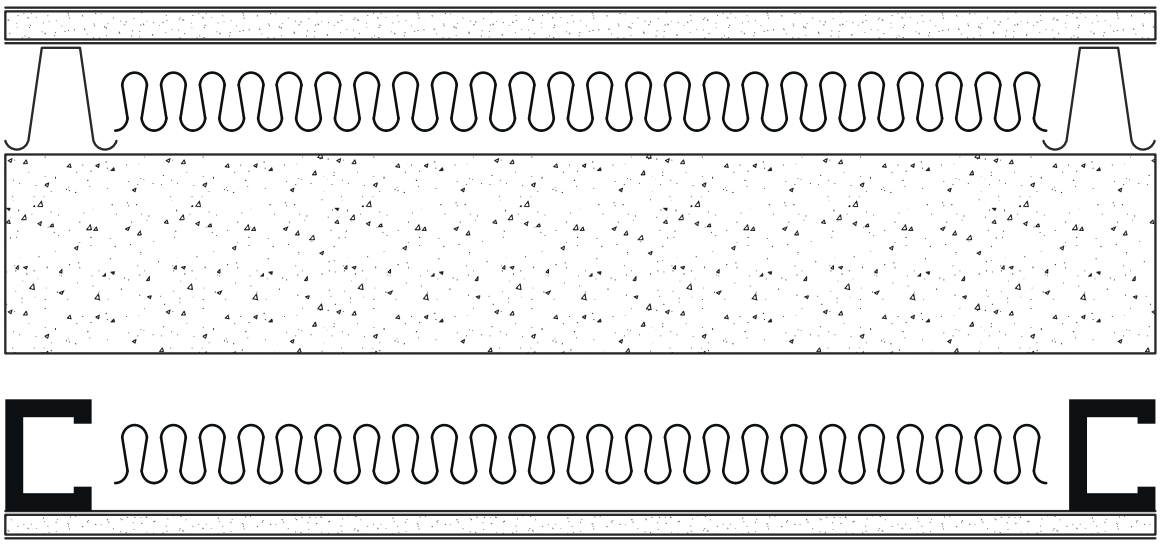

Figure 10.7.7c: Two leaves of 75 mm autoclaved aerated concrete wall panel

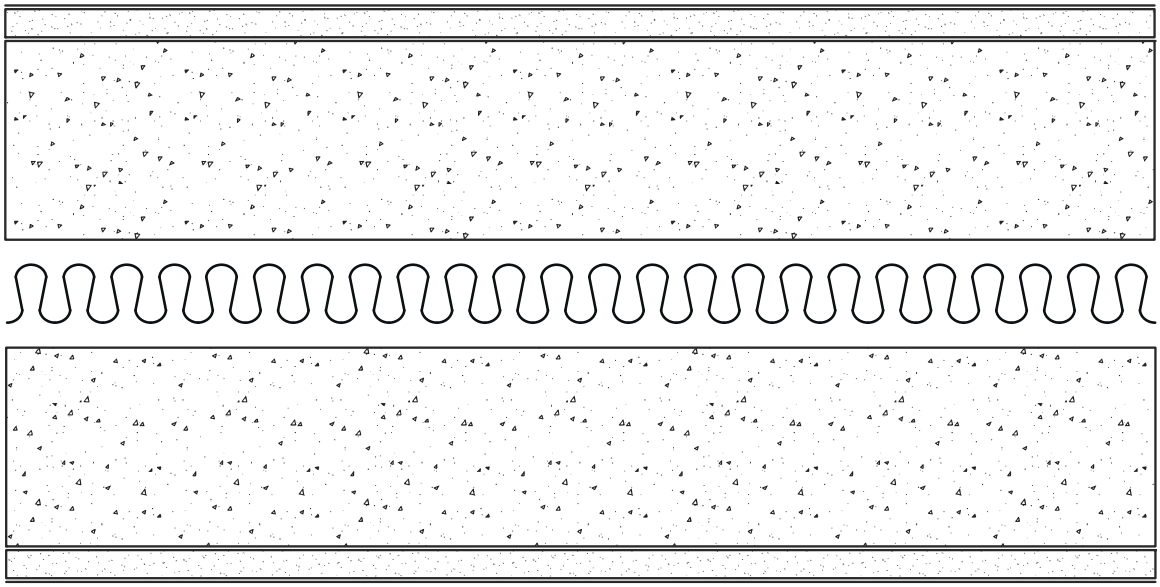

10.7.8 Acceptable forms of construction for timber and steel framed walls

[2019: Table 3.8.6.1d]

(1) Acceptable forms of construction for timber and steel framed walls are set out in (2) and (3).

(2) Two rows of 90 mm x 35 mm timber studs or two rows of 64 mm steels studs at 600 mm centres with—

(a) an air gap not less than 20 mm between the rows of studs; and

(b) 50 mm thick glass wool insulation or 60 mm thick polyester insulation with a density of 11 kg/m³, positioned between one row of studs, and

(c) two layers of 13 mm fire protective grade plasterboard or one layer of 6 mm fibre cement sheet and one layer of 13 mm fire protective grade plasterboard, fixed to outside face of studs,

has an $R_w + C_{tr}$ of not less than 50, if constructed in accordance with Figure 10.7.8a.

(3) Two rows of 64 mm steel studs at 600 mm centres with—

(a) an air gap not less than 80 mm between the rows of studs; and

(b) 200 mm thick polyester insulation with a density of 14 kg/m^3 positioned between studs; and

(c) one layer of 13 mm fire-protective grade plasterboard and one layer 13 mm plasterboard on one outside face and one layer of 13 mm fire-protective grade plasterboard on the other outside face,

has an $R_w + C_{tr}$ of not less than 50, if constructed in accordance with Figure 10.7.8b.

Figure 10.7.8a: **Two rows of 90 mm x 35 mm timber studs or two rows of 64 mm steels studs at 600 mm centres**

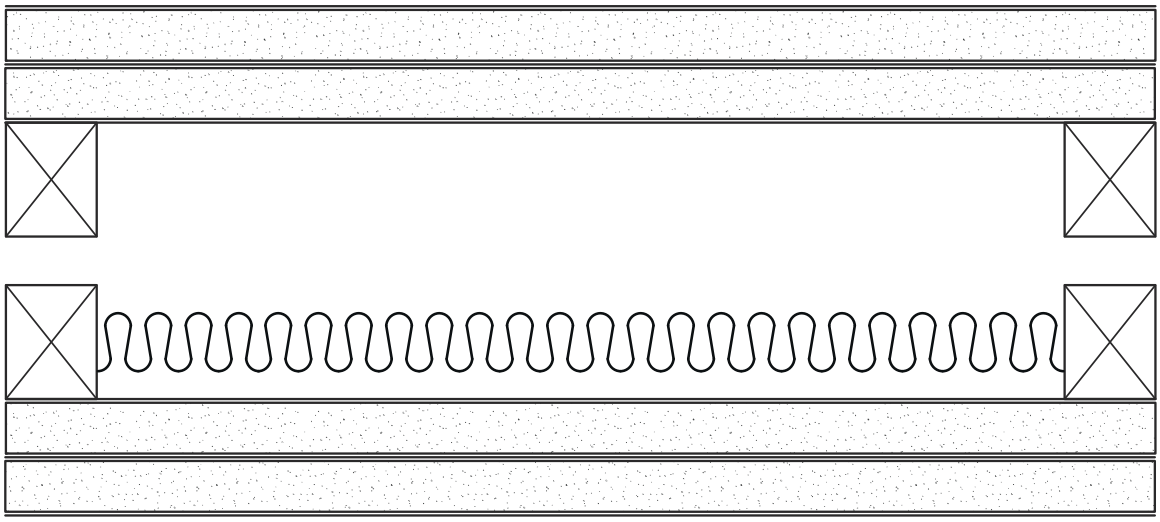

Figure 10.7.8b: **Two rows of 64 mm steel studs at 600 mm centres**

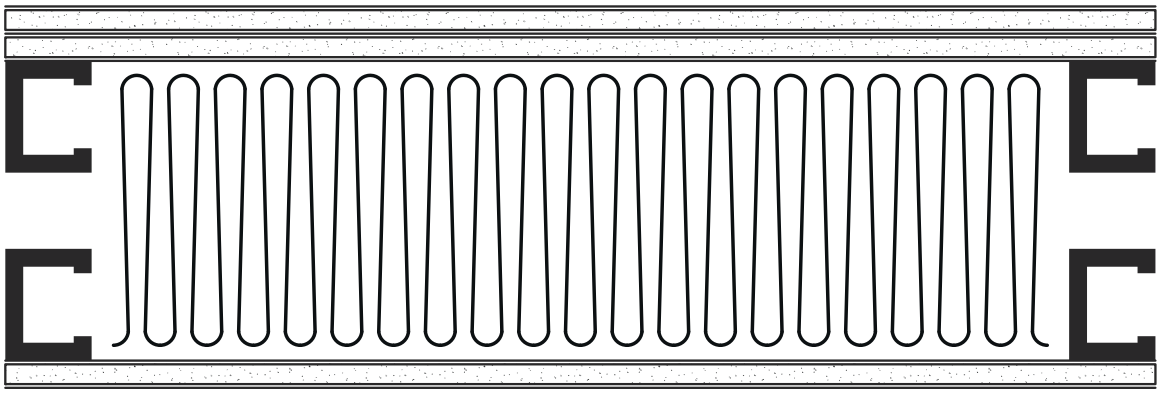

Part 10.8 Condensation management

10.8.1 External wall construction

[2019: 3.8.7.2]

(1) Where a *pliable building membrane* is installed in an *external wall*, it must—

(a) comply with AS 4200.1; and

(b) be installed in accordance with AS 4200.2; and

(c) be located on the exterior side of the *primary insulation layer* of wall assemblies that form the external envelope of a building.

(2) Where a *pliable building membrane*, *sarking-type material* or insulation layer is installed on the exterior side of the *primary insulation layer* of an *external wall* it must have a *vapour permeance* of not less than—

(a) in *climate zones* 4 and 5, 0.143 µg/N.s; and

(b) in *climate zones* 6, 7 and 8, 1.14 µg/N.s.

(3) Except for single skin masonry or single skin concrete, where a *pliable building membrane* is not installed in an *external wall*, the primary *water control layer* must be separated from *water sensitive materials* by a drained cavity.

Explanatory Information

10.8.1(2) requires some wall materials on the external side of the *primary insulation layer* to have a minimum level of *vapour permeance*. *Vapour permeance* is measured in µg/N.s (micrograms per newton-second).

Class 3 and Class 4 vapour control membranes (as defined by clause 5.3.4 of AS 4200.1) meet the *vapour permeance* requirements of 10.8.1(2)(a), while Class 4 vapour control membranes meet the *vapour permeance* requirements of 10.8.1(2)(b).

Open-cell insulation, such as mineral wool or fibreglass, typically has a high *vapour permeance*, while closed-cell insulation such as polystyrene typically has a low *vapour permeance*. Many foil-faced insulation products have a low *vapour permeance*.

10.8.2 Exhaust systems

[2019: 3.8.7.3]

(1) An exhaust system installed in a kitchen, bathroom, *sanitary compartment* or laundry must have a minimum flow rate of—

(a) 25 L/s for a bathroom or *sanitary compartment*; and

(b) 40 L/s for a kitchen or laundry.

(2) Exhaust from a kitchen, kitchen range hood, bathroom, *sanitary compartment* or laundry must discharge directly or via a shaft or duct to *outdoor air*.

(3) Where a venting clothes dryer is installed, it must discharge directly or via a shaft or duct to *outdoor air*.

(4) An exhaust system that is not run continuously and is serving a bathroom or *sanitary compartment* that is not ventilated in accordance with 10.6.2(a) must—

(a) be interlocked with the room's light switch; and

(b) include a run-on timer so that the exhaust system continues to operate for 10 minutes after the light switch is turned off.

(5) Except for rooms that are ventilated in accordance with 10.6.2(a), a room with an exhaust system in accordance with (1) must be provided with make-up air—

(a) via openings to an adjacent room with a free area of 14,000 mm^2; or

(b) in accordance with AS 1668.2.

(6) Except for rooms that are ventilated in accordance with 10.6.2(a), a room with an exhaust system in accordance with (3) must be provided with make-up air in accordance with AS 1668.2.

Explanatory Information

A range hood installed in a kitchen must comply with 10.8.2(2).

10.8.2(3) requires venting clothes dryers to be provided with exhaust ducting directly from the clothes dryer to *outdoor air*. This requirement only applies to venting clothes dryers and not other types of clothes dryers, such as condensing clothes dryers.

10.8.2(5) and 10.8.2(6) requires some rooms that have exhaust systems and are not naturally ventilated (e.g. rooms without openable windows) to be provided with make-up air. The make-up air openings *required* by 10.8.2(5)(a) are based on the minimum flow rates of 10.8.2(1). An opening with a free area of 14,000 mm^2 can by achieved by a 20 mm undercut to a 700 mm wide door. If the exhaust flowrates exceed the minimum flowrates of 10.8.2(1), additional make-up air openings may be required for the correct operation of the exhaust system.

10.8.3 Ventilation of roof spaces

[2019: 3.8.7.4]

(1) In *climate zones* 6, 7 and 8, a roof must have a roof space that—

(a) is located—

(i) immediately above the *primary insulation layer*; or

(ii) immediately above sarking with a *vapour permeance* of not less than 1.14 µg/N.s, which is immediately above the *primary insulation layer*; or

(iii) immediately above ceiling insulation that meets the requirements of 13.2.3(3) and 13.2.3(4); and

(b) has a height of not less than 20 mm; and

(c) is either—

(i) ventilated to *outdoor air* through evenly distributed openings in accordance with Table 10.8.3; or

(ii) located immediately underneath the roof tiles of an unsarked tiled roof.

(2) The requirements of (1) do not apply to a—

(a) concrete roof; or

(b) roof that is made of structural insulated panels; or

(c) roof that is subject to Bushfire Attack Level FZ requirements in accordance with AS 3959.

Table 10.8.3: Roof space ventilation requirements

Roof pitch	Ventilation openings
< 10°	25,000 mm^2/m provided at each of two opposing ends
≥ 10° and < 15°	25,000 mm^2/m provided at the eaves and 5,000 mm^2/m at high level
≥ 15° and < 75°	7,000 mm^2/m provided at the eaves and 5,000 mm^2/m at high level, plus an additional 18,000 mm^2/m at the eaves if the roof has a cathedral ceiling

Table Notes

(1) Ventilation openings are specified as a minimum free open area per metre length of the longest horizontal dimension of the roof.

(2) For the purposes of this Table, high level openings are openings provided at the ridge or not more than 900 mm below the ridge or highest point of the roof space, measured vertically.

Explanatory Information

Explanatory Figure 10.8.3 is an example of a roof space with low level ventilation.

Figure 10.8.3 (explanatory): Example of roof space with low level ventilation

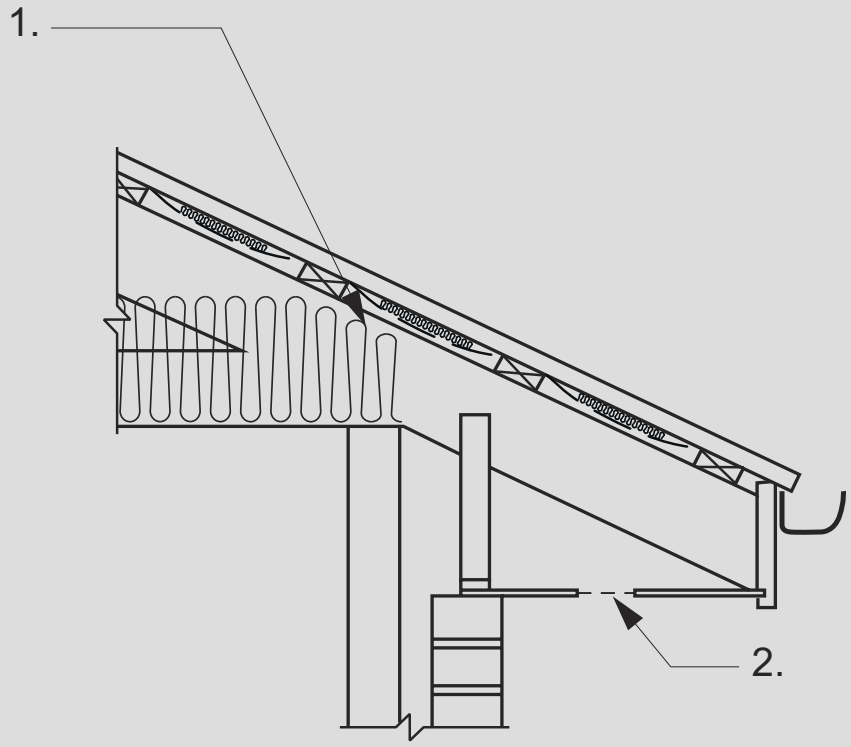

Figure Notes

(1) Minimum 20 mm gap maintained between insulation and sarking.

(2) Eave ventilation opening in accordance with Table 10.8.3.

11 Safe movement and access

Part 11.1 **Scope and application of Section 11**

11.1.1 Scope

11.1.2 Application

Part 11.2 **Stairway and ramp construction**

11.2.1 Explanation of terms

11.2.2 Stairway construction

11.2.3 Ramps

11.2.4 Slip resistance

11.2.5 Landings

11.2.6 Thresholds

Part 11.3 **Barriers and handrails**

11.3.1 Application

11.3.2 Explanation of terms

11.3.3 Barriers to prevent falls

11.3.4 Construction of barriers to prevent falls

11.3.5 Handrails

11.3.6 Construction of wire barriers

11.3.7 Protection of openable windows – bedrooms

11.3.8 Protection of openable windows – rooms other than bedrooms

Part 11.1 Scope and application of Section 11

11.1.1 Scope

[New for 2022]

This Section sets out the *Deemed-to-Satisfy Provisions* for—

(a) stairway and ramp construction (see Part 11.2); and

(b) barriers and handrails (see Part 11.3).

11.1.2 Application

[New for 2022]

The application of this Section is subject to the following:

(a) The Governing Requirements of NCC Volume Two.

(b) The State and Territory variations, additions and deletions contained in the Schedules to the ABCB Housing Provisions and NCC Volume Two.

Explanatory Information

In NCC 2019, the content of Section 11 of the ABCB Housing Provisions (other than content added in NCC 2022 or later) was contained in the acceptable construction practices for Parts 3.9.1 and 3.9.2 of NCC 2019 Volume Two.

Part 11.2 Stairway and ramp construction

11.2.1 Explanation of terms

[2019: 3.9.1.0]

(1) Figure 11.2.1 depicts stairway members and associated terminology used to describe them in the ABCB Housing Provisions.

(2) Some items such as barriers and handrails have been omitted for clarity.

Figure 11.2.1: Stairway terms

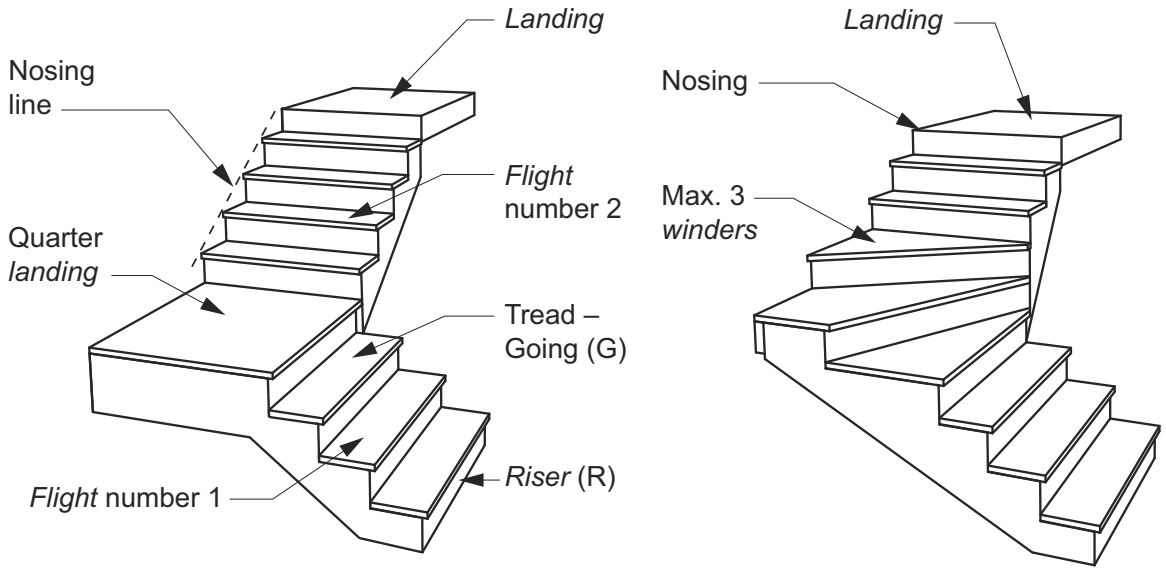

(a) Quarter landing stairway – 2 flights

(b) Continuous stairway – 1 flight (90° change in direction)

Explanatory Information: Alpine areas

The requirements of this Part are to be read in conjunction with Part 12.2 where a building is located in an *alpine area* and contains an external stairway or ramp.

Explanatory Information: Room heights

Part 10.3 contains the *required* height for a ceiling above a stairway, ramp or *landing*, measured vertically above the nosing line of stairway treads or the floor surface of a ramp or *landing*.

11.2.2 Stairway construction

[2019: 3.9.1.2]

(1) A stairway must be designed to take loading forces in accordance with AS/NZS 1170.1 and must have—

(a) not more than 18 and not less than 2 *risers* in each *flight*; and

(b) *goings* (G), *risers* (R) and a slope relationship quantity (2R + G) in accordance with Table 11.2.2a, except as permitted by (2) and (3); and

(c) constant *goings* and *risers* throughout each *flight*, except as permitted by (3) and (4), and the dimensions of *goings* (G) and *risers* (R) in accordance with (1), (2) and (3) are considered constant if the variation between—

(i) adjacent *risers*, or between adjacent *goings*, is not more than 5 mm; and

(ii) the largest and smallest *riser* within a *flight*, or the largest and smallest *going* within a *flight*, is not more than 10 mm; and

(d) *risers* which do not have any openings that would allow a 125 mm sphere to pass through between the treads; and

(e) treads of solid construction (not mesh or other perforated material) if the stairway is more than 10 m high or connects more than 3 storeys.

(2) In the case of a stairway serving only non-*habitable rooms*, such as attics, storerooms and the like that are not used on a regular or daily basis—

(a) the *going* (G), *riser* (R) and slope relationship quantity (2R + G) in accordance with Table 11.2.2a may be substituted with those in Table 11.2.2b; and

(b) need not comply with (1)(d).

(3) In the case of a stairway with *winders*—

(a) a maximum of 3 consecutive *winders* in lieu of a quarter *landing* in a *flight* and a maximum of 6 consecutive *winders* in lieu of a half *landing* in a *flight*; and

(b) the *going* (G) of all *winders* in lieu of a quarter or half *landing* may vary from the *going* of the straight treads within the same *flight* provided that the *going* (G) of such *winders* is constant.

(4) The point of measurement of the *going* (G) in the slope relationship quantity (2R + G) for *tapered treads* and treads in *spiral stairways* as described in Table 11.2.2a (see Figure 11.2.2a, Figure 11.2.2b and Figure 11.2.2c) must be—

(a) for *tapered treads*, other than treads in a *spiral stairway*—

(i) not more than 1 m in width, the middle of the unobstructed width of the stairway (see Figure 11.2.2b); and

(ii) more than 1 m in width, 400 mm from the unobstructed width of each side of the stairway (see Figure 11.2.2c); and

(b) for treads in *spiral stairways*, the point seven tenths of the unobstructed width from the face of the centre pole or support towards the handrail side (see Figure 11.2.2d and Figure 11.2.2e).

(5) *Riser* and *going* dimensions must be measured in accordance with Figure 11.2.2f.

Table 11.2.2a: Riser and going dimensions (mm)

Stair type	*Riser* (R) (see Figure 11.2.2f)		*Going* (G) (see Figure 11.2.2f)		Slope relationship (2R+G)	
	Max	Min	Max	Min	Max	Min
Stairs (other than spiral)	190	115	355	240	700	550
Spiral	220	140	370	210	680	590

Table Notes

Riser and *going* dimensions must be measured in accordance with Figure 11.2.2f

Table 11.2.2b: Riser and going dimensions (mm) — stairways serving non-habitable rooms used infrequently

Riser (R)		*Going* (G)		Slope relationship (2R+G)	
Max	Min	Max	Min	Max	Min
225	130	355	215	700	540

Table Notes

The *going* (G) must be not more than the tread depth plus a maximum gap of 30 mm between the rear edge of one tread and the nosing of the tread above.

Figure 11.2.2a: Measurement of slope relationship — Plan view — Stair with 2 flights

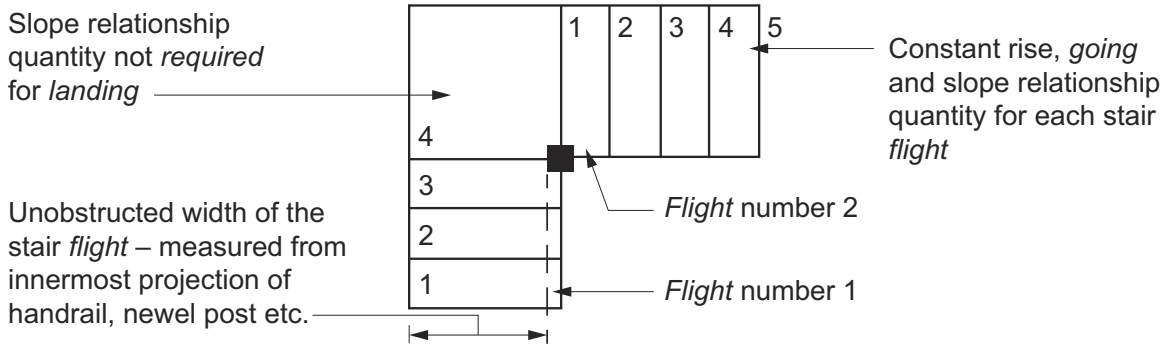

Figure 11.2.2b: Measurement of slope relationship — Plan view — Tapered treads not more than 1 m wide

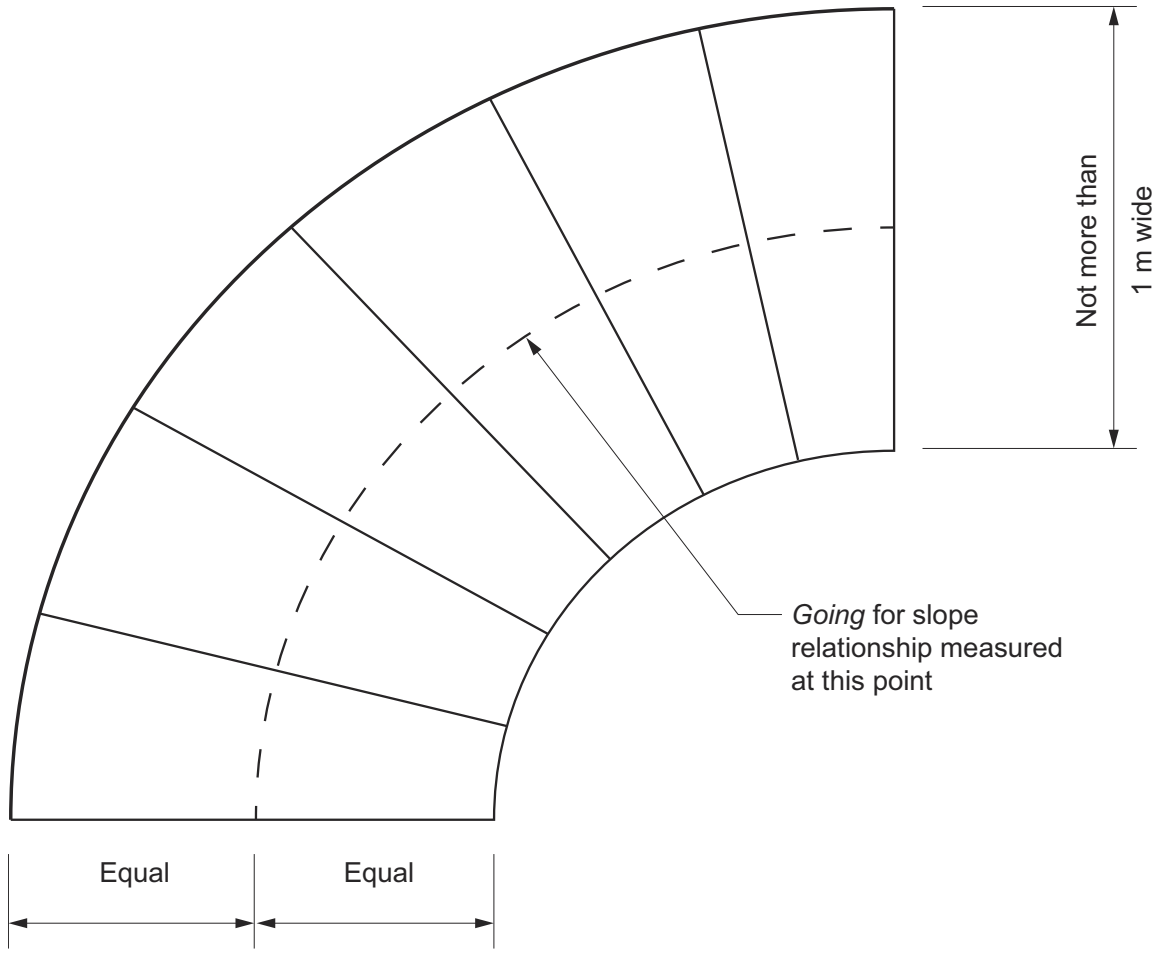

Figure 11.2.2c: Measurement of slope relationship — Plan view —Tapered treads more than 1 m wide

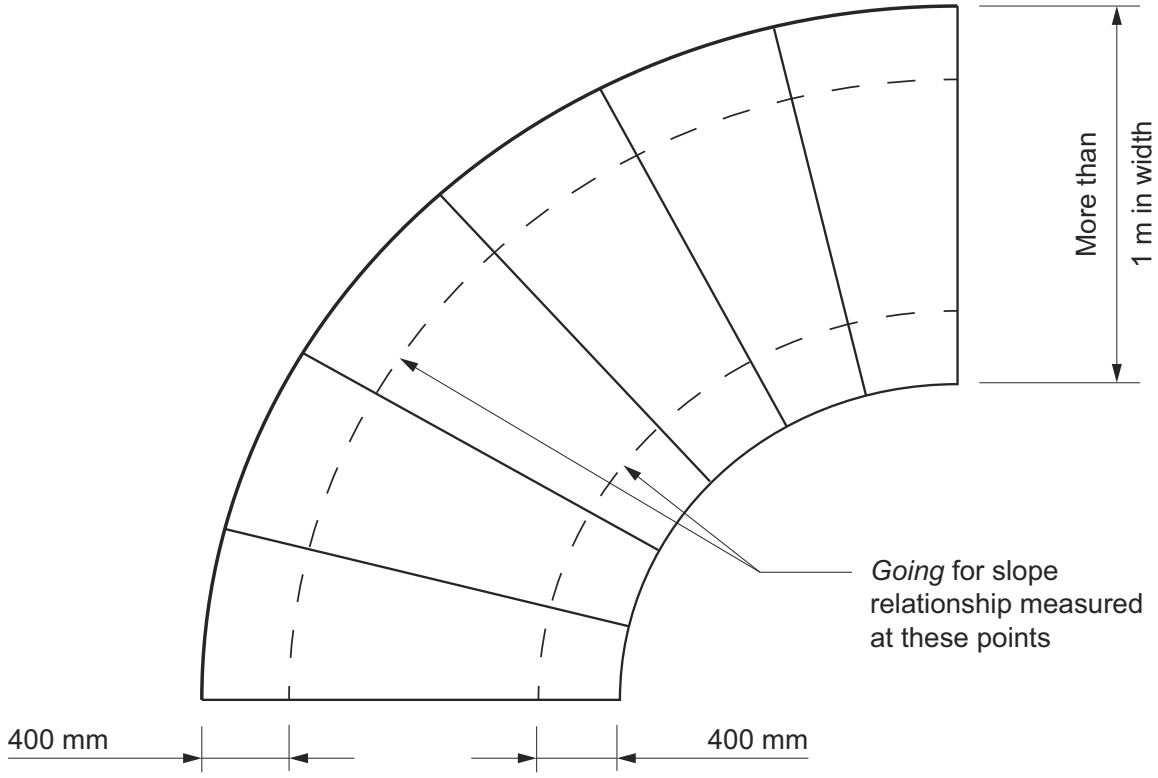

Figure 11.2.2d: Spiral stairs — Measurement for slope relationship

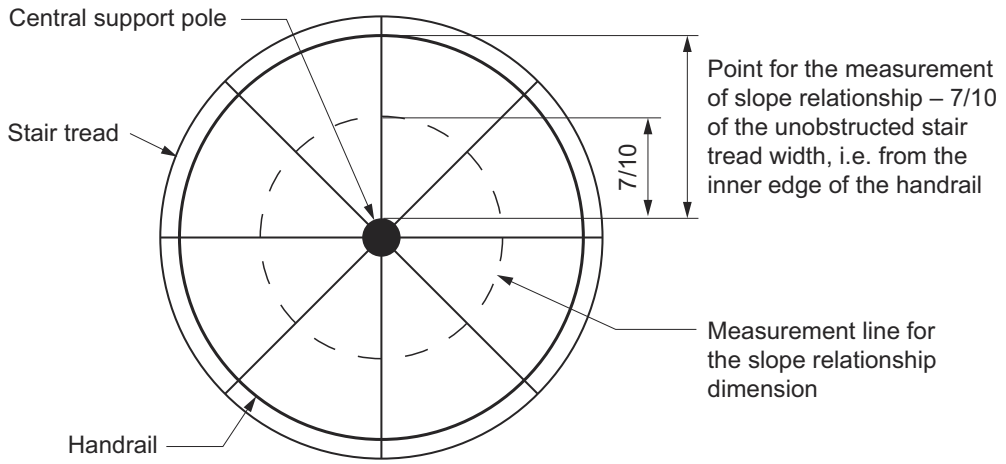

Figure 11.2.2e: Spiral stairs — Measurement of openings in stairs

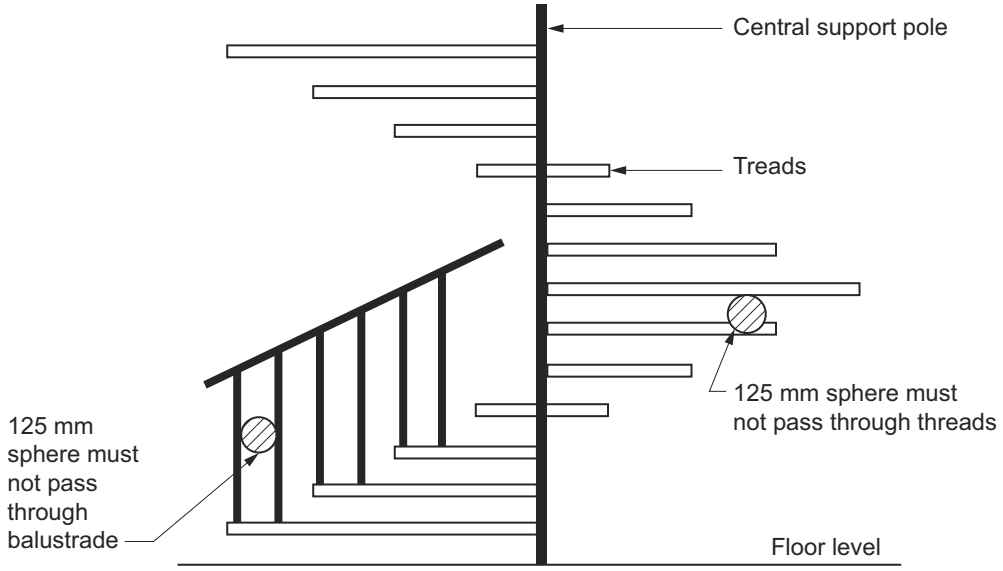

Figure 11.2.2f: Riser and going dimensions — Measurement

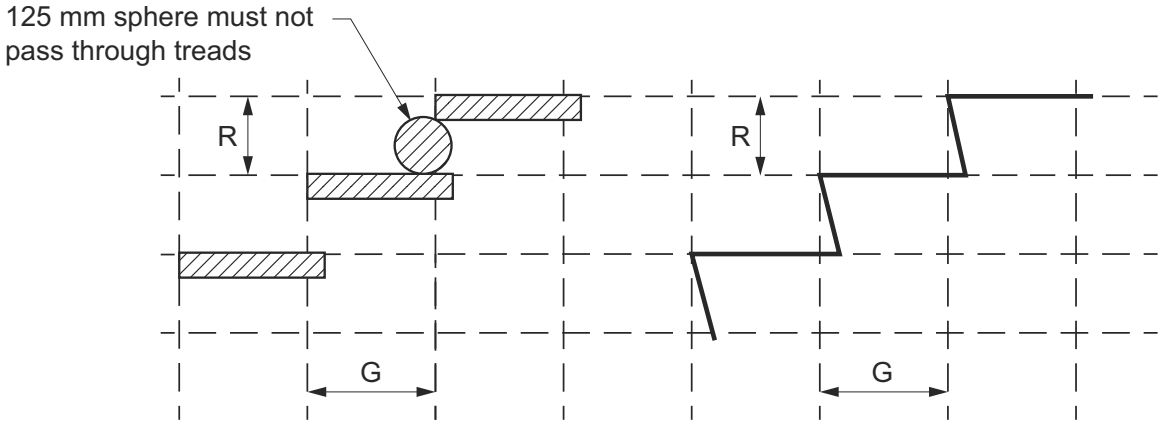

Explanatory Information: Not more than 18 and not less than 2 risers

11.2.2(1)(a) states that a stairway must have not more than 18 and not less than 2 *risers* in each *flight*. Where there are less than 2 *risers* in a *flight*, it does not comprise a stairway for the purpose of the NCC. 18 risers is considered to be the maximum reasonable number that an average person can negotiate before requiring a rest. Winders are counted as part of the maximum number of 18 *risers*. More than 1 *riser* is considered necessary for a person to observe and adjust to a change in level.

Explanatory Information: Going and riser dimensions

The purpose of 11.2.2 is to achieve constant *going* and *riser* dimensions deemed safe for people to walk up and down. This minimises the risk of people overstepping during descent on uneven stairs (due to short *goings*) and tripping on ascent (due to high *risers*). Table 11.2.2a and Table 11.2.2b express ratios between *going* and *riser* dimensions which are considered safe for use. 11.2.2(1)(c) accounts for conditions such as movement of materials due to atmospheric moisture changes or minor deviations related to variations in materials which affect finished stair dimensions.

Explanatory Figure 11.2.2a illustrates adjacent *risers* within a *flight* with minor deviations in the materials affecting the finished stair dimensions. The nominated *riser* height is exceeded by *riser* A. As a consequence *riser* height B is less than the nominated *riser* height. The difference between *riser* A and *riser* B cannot exceed 5 mm.

Explanatory Figure 11.2.2b illustrates an entire *flight* with minor deviations in the materials affecting the finished *riser* dimensions. In addition to the 5 mm difference permitted between adjacent *goings* or *risers*, the maximum difference between the smallest and largest *going* or *riser* within a *flight* must not exceed 10 mm. Despite the deviations shown in both diagrams, the stairs in the *flight* are deemed constant. Irrespective of any minor deviations permitted by 11.2.2(1)(c), finished *going* and *riser* dimensions must not exceed the limitations stipulated in Table 11.2.2a.

Figure 11.2.2a (explanatory): Minor deviations in a stairway — deviation in adjacent risers

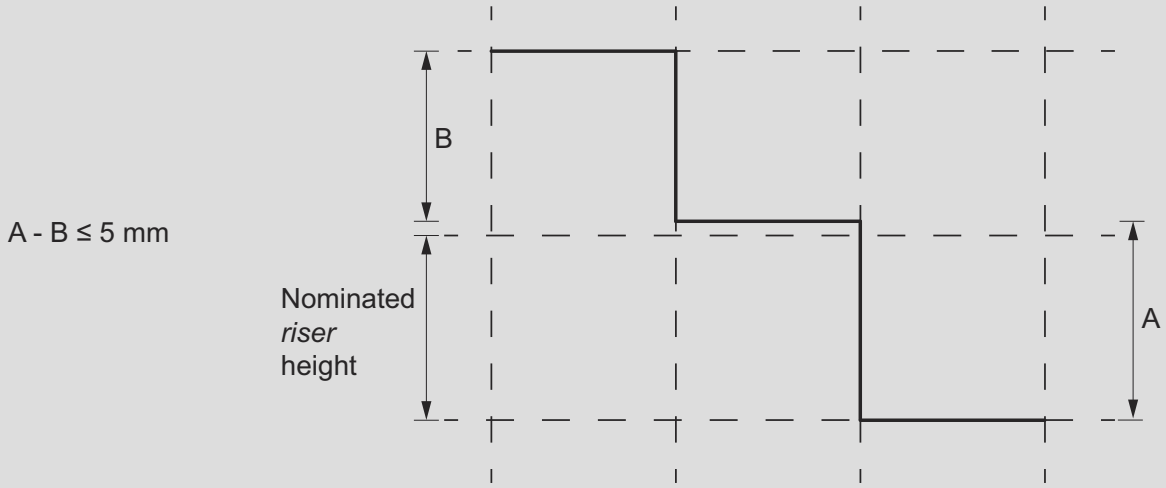

Figure Notes

(1) A = larger *riser* of two adjacent *risers*.

(2) B = smaller *riser* of two adjacent *risers*.

(3) This diagram only shows deviations in *risers*, however the same principle can apply for *goings*.

Figure 11.2.2b (explanatory): Minor deviations in a stairway – deviations over a flight

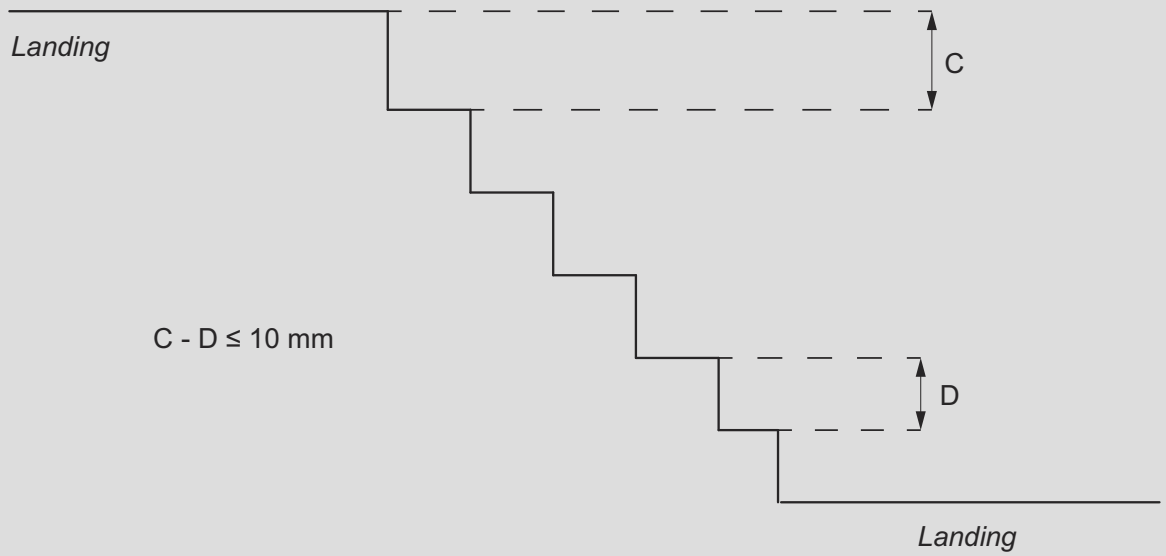

Figure Notes

(1) C = largest *riser* of the *flight*.

(2) D = smallest *riser* of the *flight*.

(3) This diagram only shows deviations in *risers*, however the same principle can apply for *goings*.

Explanatory Information: Openings in stair risers

11.2.2(1)(d) allows the use of open *riser* stairs. However, it limits the openings to 125 mm to minimise the risk of a person (especially a young child) falling through the opening created by the open *riser*.

Explanatory Information: Solid treads

11.2.2(1)(e) specifies a height where solid treads must be used so that people cannot see through them. This minimises the risk of people being affected by vertigo.

Explanatory Information: Stairways with winders

- 11.2.2(3) allows the use of *winders* in stairways. However, 11.2.2(3) places a restriction on the number of allowable *winders* in a stairway *flight*, this restriction would apply equally to not permit a stairway incorporating a consecutive series of *winders* in a *flight*.
- This also means the maximum number of consecutive *winders* in any stairway *flight* is 6.

11.2.3 Ramps

[2019: 3.9.1.3]

An external ramp serving an external doorway or a ramp within a building must—

(a) be designed to take loading forces in accordance with AS/NZS 1170.1; and

(b) have a gradient not steeper than 1:8; and

(c) be provided with *landings* complying with 11.2.5 at the top and bottom of the ramp and at intervals not greater than 15 m.

Notes: Livable housing design

Where an external ramp is provided for the purposes of compliance with the ABCB Standard for Livable Housing Design, the requirements of that Standard apply.

Explanatory Information

In relation to external ramps, 11.2.3 applies to a ramp serving an external door. For the purpose of 11.2.3 a driveway is not considered to be a ramp.

11.2.4 Slip resistance

[2019: 3.9.1.4]

(1) The requirements for slip-resistance treatment to stair treads, ramps and *landings* are as set out in (2), (3) and (4).

(2) Treads must have—

(a) a surface with a slip-resistance classification not less than that listed in Table 11.2.4 when tested in accordance with AS 4586; or

(b) a nosing strip with a slip-resistance classification not less than that listed in Table 11.2.4 when tested in accordance with AS 4586.

(3) The floor surface of a ramp must have a slip-resistance classification not less than that listed in Table 11.2.4 when tested in accordance with AS 4586.

(4) *Landings*, where the edge leads to the *flight* below, must have—

(a) a surface with a slip-resistance classification not less than that listed in Table 11.2.4 when tested in accordance with AS 4586, for not less than 190 mm from the stair nosing; or

(b) a nosing strip with a slip-resistance classification not less than that listed in Table 11.2.4 when tested in accordance with AS 4586.

Table 11.2.4: Slip-resistance classification

Application	Dry surface conditions	Wet surface conditions
Ramp not steeper than 1:8	P4 or R10	P5 or R12
Tread surface	P3 or R10	P4 or R11
Nosing or landing edge strip	P3	P4

Explanatory Information

- To determine the appropriate surface of a tread or the floor surface of a ramp, it is necessary to determine the likely conditions the tread or ramp will be subject to over the life of the building. This can be either dry, wet or both. A dry surface is one that is not normally wet or likely to be made wet other than by an accidental spill. A wet surface is one that is normally wet or likely to be made wet, including areas exposed to the weather.
- Under 11.2.4(2) stair treads must have a surface or nosing strip which minimises the risk of people slipping and injuring themselves. In each case the surface or nosing must have a slip-resistance classification when tested in accordance with AS 4586. There are two tests (the Wet Pendulum Test or the Oil-Wet Inclining Platform Test) and two conditions (dry or wet) to be considered.
- Under 11.2.4(3) the floor surface of a ramp must be slip-resistant to minimise the risk of people slipping and injuring themselves. The surface must have a slip-resistance classification when tested in accordance with AS 4586.

11.2.5 Landings

[2019: 3.9.1.5]

(1) *Landings* must—

(a) be not less than 750 mm long and where this involves a change in direction, the length is measured 500 mm from the inside edge of the *landing* (see Figure 11.2.5a); and

(b) have a gradient not steeper than 1:50; and

(c) be provided where the sill of a threshold of a doorway opens onto a stairway or ramp that provides a change in floor level or floor to ground level greater than 3 risers or 570 mm (see Figure 11.2.5b); and

(d) extend across the full width of a doorway.

(2) In the case of a stairway serving only non-*habitable rooms*, such as attics, storerooms and the like that are not used on a regular or daily basis, the requirements of (1)(a) may be substituted with a minimum length of *landing* being not less than 600 mm long.

Figure 11.2.5a: Landings

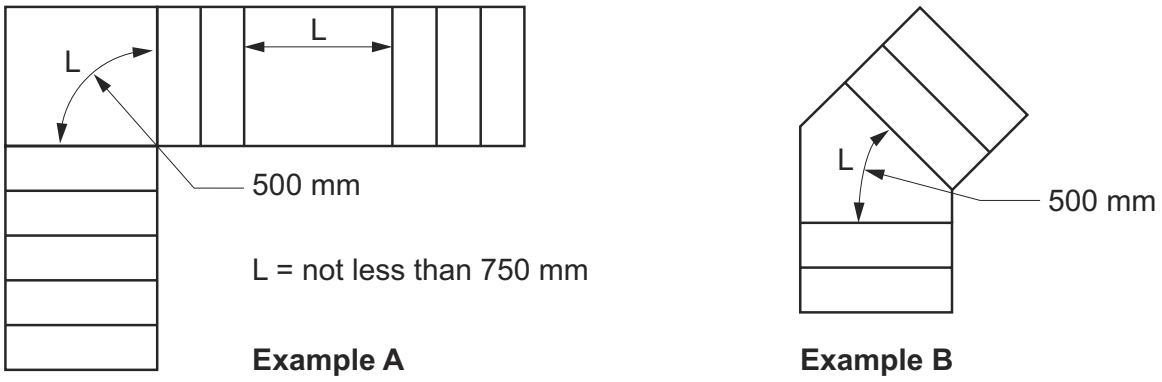

Figure 11.2.5b: Threshold landing

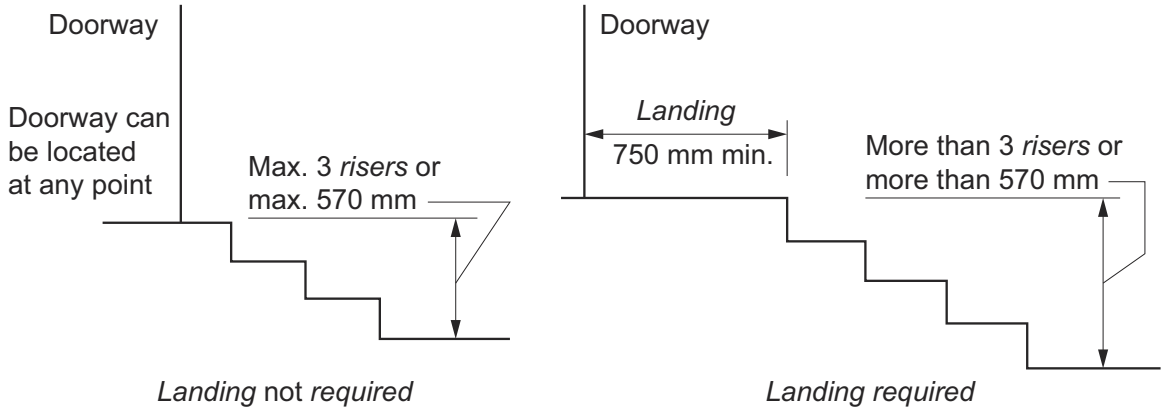

Explanatory Information: Purpose of a landing

The purpose of a *landing* is to provide a rest area for people using the stairway or ramp, and to allow the stairway or ramp to change direction if needed.

Explanatory Information: Minimum landing length

The minimum length of a *landing* allows people using a stairway or ramp to rest, and reduces the risk of people falling more than one *flight* of stairs.

Explanatory Information: Maximum grade of 1:50

The maximum grade of 1 in 50 *required* under 11.2.5(1)(b) makes sure that the *landing* is as level as possible, but still allows a slight slope for drainage if necessary.

11.2.6 Thresholds

[2019: 3.9.1.6]

Where the threshold of a doorway is more than 230 mm above the adjoining surface it must incorporate steps having *riser* (R) and *going* (G) dimensions in accordance with 11.2.2.

Part 11.3 Barriers and handrails

11.3.1 Application

[2019: 3.9.2.1]

Compliance with this Part is achieved by complying with—

(a) 11.3.3, 11.3.4 and 11.3.6 for barriers to prevent falls; and

(b) 11.3.5 for handrails; and

(c) 11.3.7 and 11.3.8 for protection of openable windows.

Explanatory Information: External trafficable structures

For a *required* barrier to an external trafficable structure in an *alpine area*, the requirements of this Part need to be read in conjunction with the requirements of Part 12.2.

Explanatory Information: Swimming pools

Safety barrier requirements for *swimming pools* are contained in H7D2.

Explanatory Information: Additional requirements

In addition to the requirements of this Part, a barrier and handrail must comply with the structural requirements of Part 2.2. The structural requirements refer to the barrier and/or handrail being designed and constructed to withstand any combinations of loads and other actions to which it may reasonably be subjected and the structural resistance of the materials and forms of construction used for the barrier or handrail.

A window forming a part of a barrier must comply with the glazing assembly provisions of Section 8, and therefore is not *required* to comply with AS/NZS 1170.1 (structural design actions - referenced in Part 2.2) as it is exempted by Section 8. The Section 8 provisions consider the wind loading on the glazing and human impact requirements.

11.3.2 Explanation of terms

[2019: Figure 3.9.2.0]

(1) Figure 11.3.2 depicts typical stairway and barrier members and associated terminology.

(2) Some items have been omitted for clarity.

Figure 11.3.2: Typical stairway and barrier members

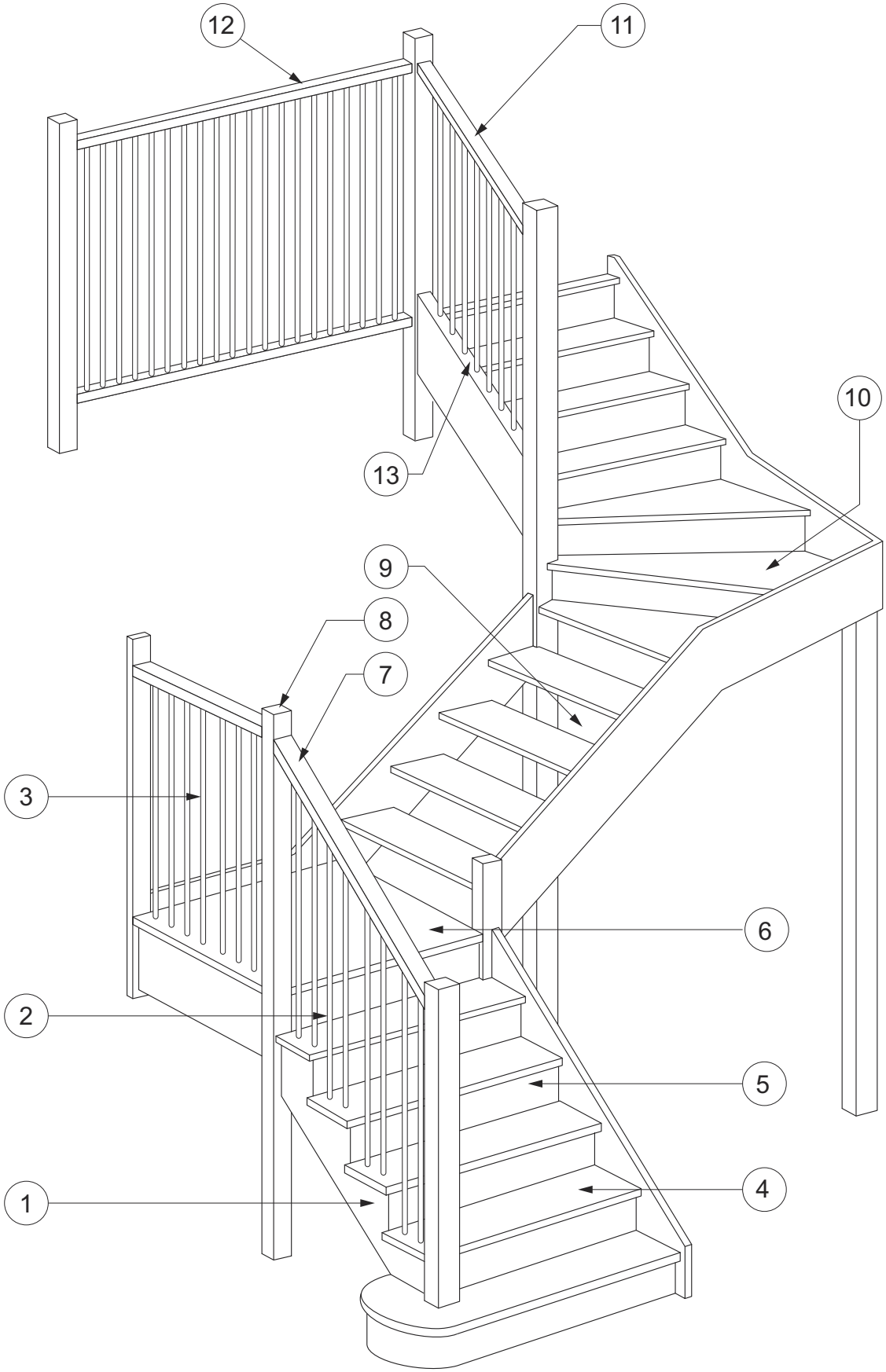

Figure Notes

Legend:

(1) Stringer

(2) Baluster
(3) Barrier
(4) Tread
(5) *Riser*
(6) *Landing*
(7) Handrail
(8) Newel post
(9) Open *riser*
(10) *Winders* (tapered treads)
(11) Handrail
(12) *Landing* barrier
(13) Barrier

11.3.3 Barriers to prevent falls

[2019: 3.9.2.2]

(1) A continuous barrier must be provided along the side of a trafficable surface, such as—

(a) a stairway, ramp or the like; and

(b) a floor, corridor, hallway, balcony, deck, verandah, *mezzanine*, access bridge or the like; and

(c) a roof top space or the like to which general access is provided; and

(d) any delineated path of access to a building,

where it is possible to fall 1 m or more measured from the level of the trafficable surface to the surface beneath (see Figure 11.3.3a).

(2) The requirements of (1) do not apply to—

(a) a retaining wall unless the retaining wall forms part of, or is directly associated with, a delineated path of access to a building from the road, or a delineated path of access between buildings (see Figure 11.3.3b); or

(b) a barrier provided to an openable window covered by 11.3.7 and 11.3.8.

Figure 11.3.3a: Barriers — when required

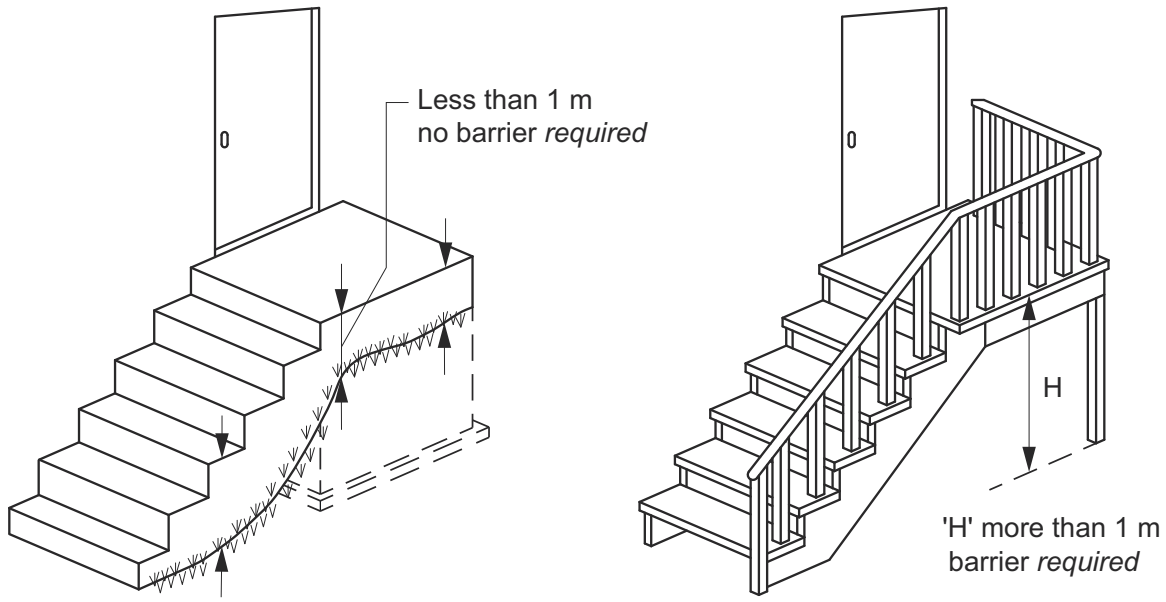

(a) Barrier not required **(b) Barrier required**

Figure 11.3.3b: Barriers — when required for retaining walls

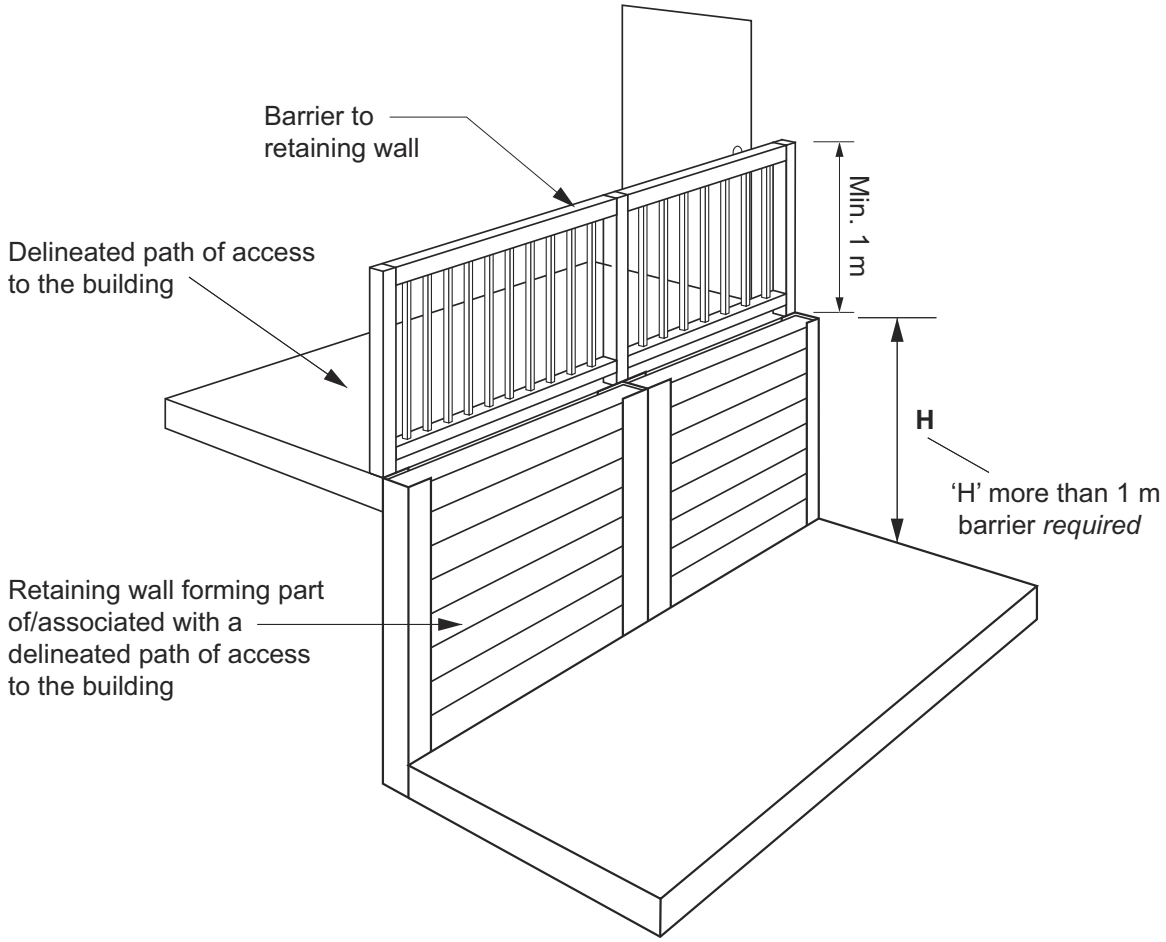

Explanatory Information: Intent

The intent of the barrier requirements is to prescribe provisions to minimise the risk of a person falling from a stairway, raised floor level (such as a balcony) or the like. 11.3.3 sets out when barriers are *required* to be provided and 11.3.4 contains the requirements for the construction of barriers.

Explanatory Information: Barriers and children

Children are at particular risk of falling off, over or through ineffectively designed or constructed barriers. Accordingly the requirements of this Part aim to ensure that a barrier reduces the likelihood of children being able to climb over a barrier or fall through a barrier.

11.3.4 Construction of barriers to prevent falls

[2019: 3.9.2.3]

(1) A barrier *required* by 11.3.3 must comply with (2) to (11).

(2) The height of a barrier must be in accordance with the following:

(a) The height must not be less than 865 mm above the nosings of the stair treads, the floor of a ramp or the like (see Figure 11.3.4a).

(b) The height must not be less than—

(i) 1 m above the floor of any *landing*, corridor, hallway, balcony, deck, verandah, access path, *mezzanine*, access bridge, roof top space or the like to which general access is provided (see Figure 11.3.3b and Figure 11.3.4a); or

(ii) 865 mm above the floor of a *landing* to a stairway or ramp where the barrier is provided along the inside edge of the *landing* and does not exceed a length of 500 mm.

(3) A transition zone may be incorporated where the barrier height changes from 865 mm on the stairway *flight* or ramp to 1 m at the *landing* (see Figure 11.3.4b).

(4) Openings in barriers (including decorative balustrades) must be constructed so that they do not permit a 125 mm sphere to pass through it and for stairways, the opening is measured above the nosing line of the stair treads (see Figure 11.3.4a).

(5) Where a *required* barrier is fixed to the vertical face forming an edge of a *landing*, balcony, deck, stairway or the like, the opening formed between the barrier and the face must not exceed 40 mm.

(6) For the purposes of (5), the opening is measured horizontally from the edge of the trafficable surface to the nearest internal face of the barrier.

(7) A barrier to a stairway serving a non-*habitable room*, such as an attic, storeroom or the like that is not used on a regular or daily basis, need not comply with (4) if—

(a) openings are constructed so that they do not permit a 300 mm sphere to pass through; or

(b) where rails are used, the barrier consists of a top rail and an intermediate rail, with the openings between rails not more than 460 mm.

(8) Restriction on horizontal elements:

(a) Where it is possible to fall more than 4 m, any horizontal elements within the barrier between 150 mm and 760 mm above the floor must not facilitate climbing.

(b) For the purpose of (a), the 4 m is measured from the floor level of the trafficable surface to the surface beneath.

(9) A barrier constructed of wire is deemed to meet the requirements of (4) if it is constructed in accordance with 11.3.6.

(10) A glass barrier or *window* serving as a barrier must comply with H1D8 and the relevant provisions of this Part.

(11) A barrier, except a *window* serving as a barrier, must be designed to take loading forces in accordance with AS/NZS 1170.1.

Figure 11.3.4a: Barrier construction

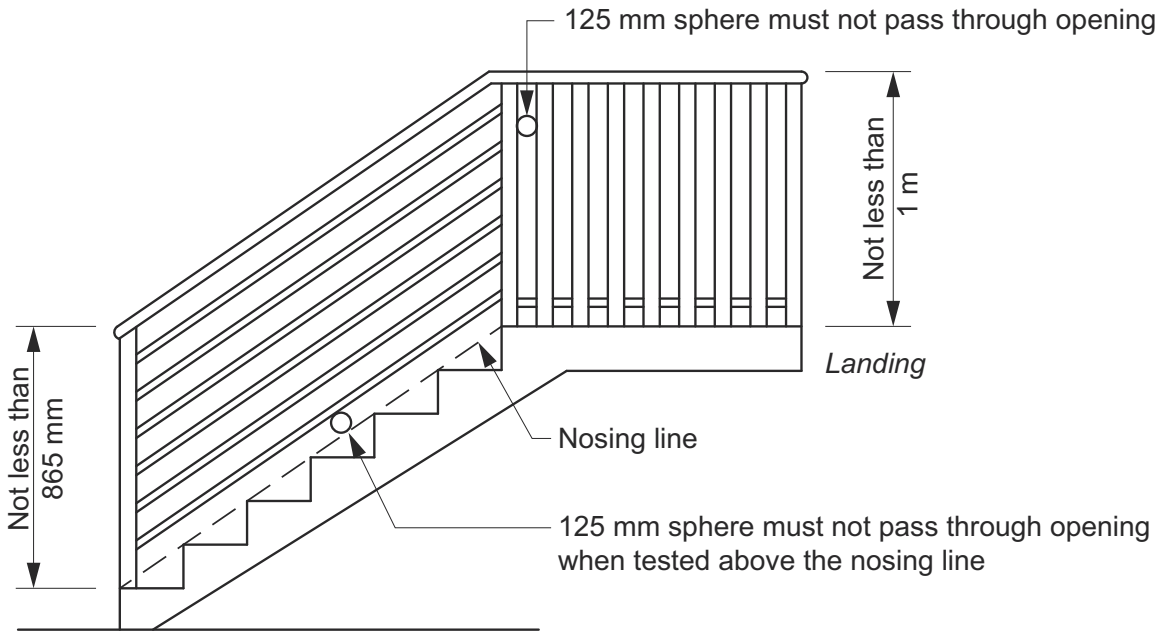

Figure 11.3.4b: Measuring heights for barriers and handrails and where transition zones are allowed

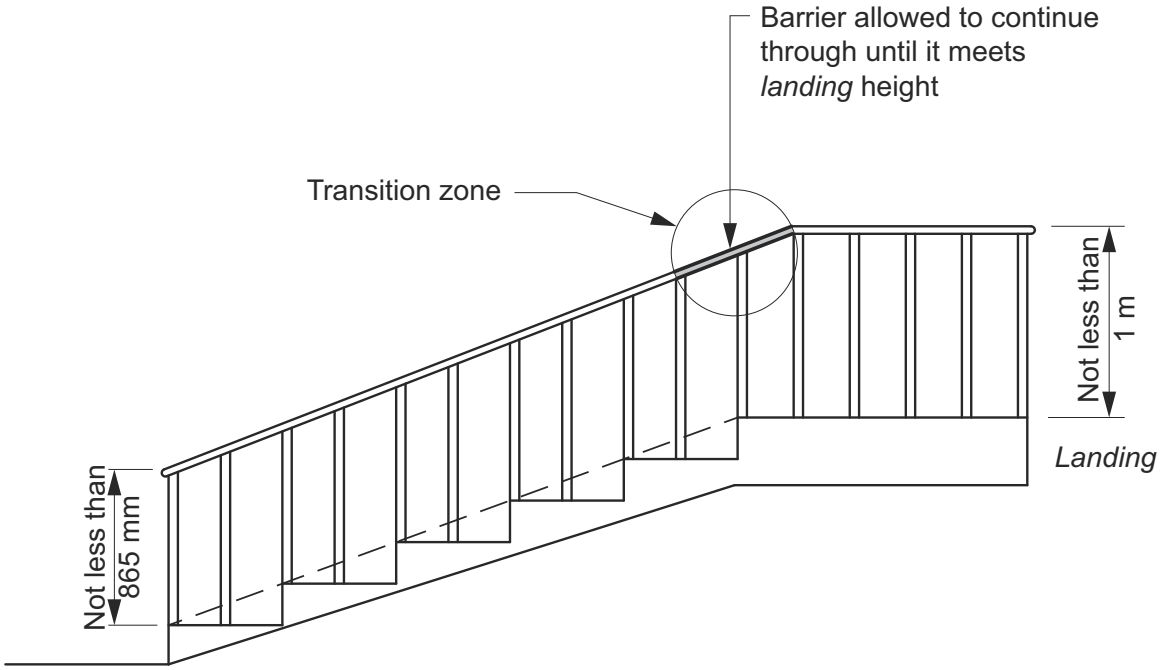

Explanatory Information

For a *window* forming part of a barrier, any horizontal elements such as a *window* sill, transom or rail between 150 mm and 760 mm above the floor is deemed to facilitate climbing.

Section 8 contains the glazing assembly provisions for glass barriers and *windows* forming part of the barrier, however, the barrier would still need to comply with the relevant requirements of this Part for *required* height, allowable openings, etc.

11.3.5 Handrails

[2019: 3.9.2.4]

(1) Handrails to a stairway or ramp must—

(a) be located along at least one side of the stairway *flight* or ramp; and

(b) be located along the full length of the stairway *flight* or ramp, except in the case where a handrail is associated with a barrier the handrail may terminate where the barrier terminates; and

(c) have the top surface of the handrail not less than 865 mm vertically above the nosings of the stair treads or the floor surface of the ramp (see Figure 11.3.4b); and

(d) be continuous and have no obstruction on or above them that will tend to break a handhold, except for newel posts, ball type stanchions, or the like.

(2) The requirements of (1) do not apply to—

(a) a stairway or ramp providing a change in elevation of less than 1 m; or

(b) a *landing*; or

(c) a *winder* where a newel post is installed to provide a handhold.

Explanatory Information

(1) 11.3.5 addresses requirements regarding location, height and extent of handrails. Where a barrier and handrail are installed together, 11.3.5 is to be read in conjunction with 11.3.3, 11.3.4 and 11.3.6.

(2) A handrail is *required* on at least one side of the stairway *flight* or ramp. The top rail of a barrier may be suitable as a handrail if it meets 11.3.5 and is able to be grasped by hand to provide support to the person using the stairway or ramp.

(3) 11.3.5(1)(b) requires a continuous handrail which must extend the full length of the stairway *flight* or ramp except where the handrail is associated with the barrier, in which case the handrail can terminate where the barrier is allowed to terminate. This allows for the barriers to geometric stairways such as elliptical, spiral, circular or curved stairways to finish a few treads from the bottom of the stairway.

(4) 11.3.5(1)(c) requires a minimum handrail height of 865 mm. This height provides comfort, stability, support and assistance for most users.

(5) 11.3.5(2) outlines where a handrail need not be provided, this includes—

(a) where a stairway or ramp is providing a change in elevation less than 1 m; or

(b) a *landing* for a stairway or ramp; or

(c) a *winder* in a stairway if a newel post is installed to provide a handhold.

11.3.6 Construction of wire barriers

[2019: 3.9.2.5]

(1) A wire barrier is deemed to meet the requirements of 11.3.4(4) if it is constructed in accordance with (2) to (4).

(2) For a horizontal or near horizontal wire system—

(a) when measured with a strain indicator, it must be in accordance with the tension values in Table 11.3.6a; or

(b) when measured for a maximum permissible deflection, it must not exceed the maximum deflections in Table 11.3.6b.

(3) For a non-continuous vertical wire system—

(a) when measured with a strain indicator, it must be in accordance with the tension values in Table 11.3.6a (see Note 4); or

(b) when measured for maximum permissible deflection, it must not exceed the maximum deflections in Table 11.3.6b.

(4) For a continuous vertical or continuous near vertical sloped wire system—

(a) it must have wires of not more than 2.5 mm diameter with a lay of 7 x 7 or 7 x 19 construction; and

(b) changes in direction at support rails must pass around a pulley block without causing permanent deformation to the wire; and

(c) supporting rails must be spaced of not more than 900 mm apart and be of a material that does not allow deflection that would decrease the tension of the wire under load; and

(d) when the wire tension is measured with a strain indicator, it must be in accordance with the tension values in Table 11.3.6c when measured in the furthermost span from the tensioning device.

Table 11.3.6a: Wire barrier construction – Minimum required tension (N) for stainless steel horizontal wire

Wire dia. (mm)	Lay	Wire spacing (mm)	Clear distance between posts (mm)								
			600	800	900	1000	1200	1500	1800	2000	2500
2.5	7x7	60	55	190	263	415	478	823	1080	1139	x
		80	382	630	730	824	1025	1288	x	x	x
		100	869	1218	1368	x	x	x	x	x	x
2.5	1x19	60	35	218	310	402	585	810	1125	1325	x
		80	420	630	735	840	1050	1400	1750	x	x
		100	1140	1565	x	x	x	x	x	x	x
3.0	7x7	60	15	178	270	314	506	660	965	1168	1491
		80	250	413	500	741	818	1083	1370	1565	x
		100	865	1278	1390	1639	x	x	x	x	x

Wire dia. (mm)	Lay	Wire spacing (mm)	Clear distance between posts (mm)								
			600	800	900	1000	1200	1500	1800	2000	2500
3.0	1x19	60	25	183	261	340	520	790	1025	1180	x
		80	325	555	670	785	1025	1330	1725	1980	x
		100	1090	1500	1705	1910	x	x	x	x	x
4.0	7x7	60	5	73	97	122	235	440	664	813	1178
		80	196	422	480	524	760	1100	1358	1530	2130
		100	835	1182	1360	1528	1837	2381	2811	3098	x
4.0	1x19	60	5	5	10	15	20	147	593	890	1280
		80	30	192	300	415	593	1105	1303	1435	1844
		100	853	1308	1487	1610	2048	2608	3094	3418	3849
4.0	7x19	60	155	290	358	425	599	860	1080	1285	1540
		80	394	654	785	915	1143	1485	1860	2105	2615
		100	1038	1412	1598	1785	2165	2735	x	x	x

Table Notes

(1) Lay = number of strands by the individual wires in each strand. For example a lay of 7 x 19 consists of 7 strands with 19 individual wires in each strand.

(2) Where a change of direction is made in a run of wire, the tensioning device is to be placed at the end of the longest span.

(3) If a 3.2 mm diameter wire is used, the tension figures for 3.0 mm wire are applied.

(4) This table may also be used for a set of non-continuous (single) vertical wires forming a barrier using the appropriate clear distance between posts as the vertical clear distance between the rails.

(5) X = not allowed because the *required* tension would exceed the safe load of the wire.

(6) Tension measured with a strain indicator.

Table 11.3.6b: Continuous wire barrier construction – Maximum permissible deflection of each wire in mm when a 2 kg mass is suspended at mid-span for stainless steel wires

Wire dia. (mm)	Wire spacing (mm)	Clear distance between posts (mm)					
		600	900	1200	1500	1800	2000
2.5	60	17	11	9	8	8	8
	80	7	5	5	5	x	x
3.0	60	19	13	8	7	7	7
	80	8	6	6	5	5	5
4.0	60	18	12	8	8	7	7
	80	8	6	4	4	4	4

Table Notes

(1) Where a change of direction is made in a run of wire, the 2 kg mass must be placed at the middle of the longest span.

(2) If a 3.2 mm diameter wire is used, the deflection figures for a 3.0 mm wire are applied.

(3) This table may also be used for a set of non-continuous (single) vertical wires forming a barrier using the appropriate clear distance between posts as the vertical clear distance between the rails.

(4) The deflection (offset) is measured by hooking a standard spring scale to the mid span of each wire and pulling it horizontally until a force of 19.6 N is applied.

(5) X = not allowed because the *required* tension would exceed the safe load of the wire.

(6) This table has been limited to 60 mm and 80 mm spaces for 2.5 mm, 3 mm and 4 mm diameter wires because the

required wire tensions at greater spacings would require the tension to be beyond the wire safe load limit, or the allowed deflection would be impractical to measure.

Table 11.3.6c: Continuous wire barrier construction—Minimum required tension (N) for vertical or near-vertical stainless steel wires where the maximum clear spacing between the rails is 900mm

Wire dia. (mm)	Lay	Wire spacing (mm)	Required tension in Newtons (N)
2.5	7 x 19	80	145
		100	310
		110	610
2.5	7 x 7	80	130
		100	280
		110	500

Table Notes

(1) Lay = number of strands by the number of individual wires in each strand. For example a lay of 7 x 19 consists of 7 strands with 19 individual wires in each strand.

(2) Vertical wires must have two pulley blocks to each 180 degree change of direction in the wire.

(3) Near vertical wires may only *require* one pulley block for each change of direction.

(4) Wire tension measured with a strain indicator.

(5) The table only includes 7 x 7 and 7 x 19 wires due to other wires not having sufficient flexibility to make the necessary turns.

Explanatory Information

- For the purpose of 11.3.6, a wire barrier consists of a series of tensioned wire rope connected to either vertical or horizontal supports serving as a guard to reduce the risk of a person falling from a roof, stairway, raised floor level or the like.
- To assist in the application of 11.3.6, the following terms are explained:
  - (i) Continuous - where the wire spans three or more supports.
  - (ii) Non-continuous - where the wire only spans between two supports.
  - (iii) Pulley block - a device consisting of a wheel in which a wire runs around to change its direction.
  - (iv) Permissible deflection - is the allowable bending of the wire.
  - (v) Support rails - are horizontal components of the barrier system that span across the top and bottom to provide structural support.
- Tables 11.3.6a and 11.3.6c contain tension requirements for wires in vertical and horizontal wire barrier systems with varying post spacings, wire spacings and wire types, whereas Table 11.3.6b contains deflection requirements for use in horizontal and vertical barrier systems. The figures contained in the tables were derived from testing the spacing combinations in order to prevent the passage of a 125 mm diameter solid cone penetrating between the wires at a predetermined force.
- It is important to read the notes to the tables as they provide additional information on their application to horizontal, vertical and near vertical wire barriers.
- Wire barriers deflect under loading conditions, even when tightly tensioned. This is particularly relevant over the service life of the barrier as the wire tends to lose its tension. Therefore, care needs to be taken to ensure that wire tension will be maintained during the life of the barrier. In some situations, it may be necessary to incorporate “lock-off” devices to prevent loosening of the wire. Likewise, if a threaded anchor bears against a soft wood post or rail, the anchor may indent the post or rail, thus loosening the wire.
- Temperature effects on the tension of the wire may be significant but there is little that can be done to allow for temperature variation in service. The shorter the wire span, the lesser the effect will be.
- Stainless steel wire with a lay of 1 x 19 has the greatest elastic modulus and will take up the same load with less

extension than equivalent wires with other lays.

- A wire barrier excludes wire mesh fences and the like.
- Sharp ends of wires at terminations and swages need to be removed for the safety of children and other people. No wire end should protrude more than half the diameter of the wire from the swage or termination fitting.
- It should be noted that 11.3.6 is only one form of compliance solution which can be used to demonstrate compliance with H5P2(2)(c) and (d). The following means of verification are available:
  - (i) H5V1.
  - (ii) The *Deemed-to-Satisfy Provisions* in 11.3.6.
  - (iii) A *Performance Solution* that uses one of the other NCC *Assessment Methods* which verifies that H5P2(2)(c) and (d) will be achieved.

11.3.7 Protection of openable windows – bedrooms

[2019: 3.9.2.6]

(1) A window opening in a bedroom must be provided with protection, where the floor below the window is 2 m or more above the surface beneath.

(2) Where the lowest level of the window opening covered by (1) is less than 1.7 m above the floor, the window opening must comply with the following:

(a) The openable portion of the window must be protected with—

(i) a device capable of restricting the window opening; or

(ii) a screen with secure fittings.

(b) A device or screen *required* by (a) must—

(i) not permit a 125 mm sphere to pass through the window opening or screen; and

(ii) resist an outward horizontal action of 250 N against the—

(A) window restrained by a device; or

(B) screen protecting the opening; and

(iii) have a child resistant release mechanism if the screen or device is able to be removed, unlocked or overridden.

(3) Where a device or screen provided in accordance with (2)(a) is able to be removed, unlocked or overridden, a barrier with a height not less than 865 mm above the floor is *required* to an openable window in addition to window protection.

(4) A barrier covered by (3) must not—

(a) permit a 125 mm sphere to pass through it; and

(b) have any horizontal or near horizontal elements between 150 mm and 760 mm above the floor that facilitate climbing (see Figure 11.3.7).

Figure 11.3.7: Protection of openable windows — bedrooms

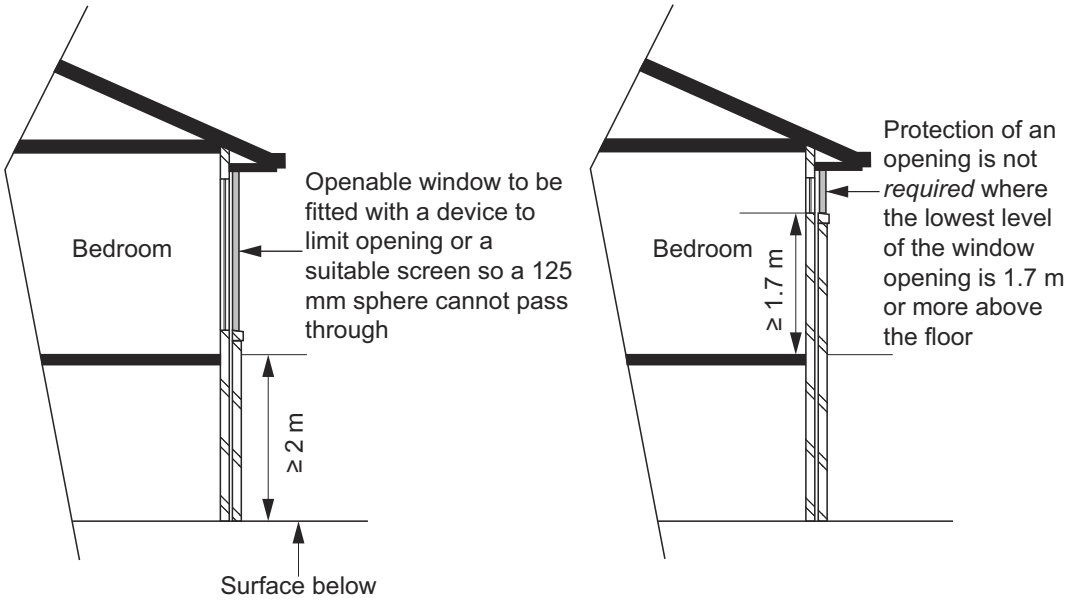

Explanatory Information: Intent

The intent of 11.3.7 is to reduce the risk of a person (especially a young child) falling through an openable window.

Explanatory Information: Protection of openable windows – bedrooms

Where the floor level below an openable window in a bedroom is less than 2 m there are no specific requirements. For an openable window 2 m or more above the surface beneath, openable windows are *required* to restrict passage of a 125 mm sphere using any one of the following design solutions:

- The window be designed such that any opening does not allow a 125 mm sphere to pass through (e.g. louvres) and be capable of resisting a 250 N force when directed against the window.
- The window be fitted with a fixed or dynamic device that is capable of restricting the window opening so it does not allow a 125 mm sphere to pass through and is difficult for a young child to operate. The restricting device must be capable of resisting a 250 N force when directed against the window such as a casement window or in attempting to push a sliding window open. An internal screen with similar parameters may be installed.
- The window be fitted with an internal or external screen that does not allow a 125 mm sphere to pass through and which must resist a horizontal outward force of 250 N.

If the openable part of the window is at least 1.7 m above the floor, no further protection is *required*.

Explanatory Information: Restricting devices

Where a device or screen is securely fixed in position (e.g. a screen pop riveted to the window frame) so it cannot be unlocked, overridden, or is very difficult to remove without for example a drill, the 865 mm barrier would not be *required* as the securing method is considered a fixture and not a child resistant release mechanism. 11.3.7(2)(b)(iii) relates to a screen or window restricting device protecting an openable window in a bedroom. The screen or opening restricting device may be installed in a manner that allows it to be removed, unlocked or overridden in the event of a fire or other emergency to allow safe egress. In these situations the unlocking device must be child resistant.

Child resistance could be achieved by the need to use a tool, key or two hands.

There are a number of hardware options available. Short chain winders and barrier screens will allow windows to comply with this requirement. Sliding window locks may lock a sash so a 125 mm sphere cannot pass through. Where provision is made to fully open the window beyond 125 mm then the child resistant release mechanism is required in addition to the device resisting a 250 N force as *required* by 11.3.7(2)(b)(ii).

11.3.7 in addition prescribes that an 865 mm barrier (sill) would be *required*. A wall beneath an openable window or fixed glazing under the openable part of a window which meets the height requirements (e.g. transom at least 865 mm above the floor) can be considered as the barrier if the criteria in 11.3.7 are met.

Explanatory Information: Use of the term 'window'

The term "window" is not italicised in 11.3.7 and as such, is not restricted to the definition of "window" in the NCC. The reason for this is to also capture windows that may let in air but not light, e.g. metal louvres. A metal louvre or openable panel would not fit in the NCC definition of window but is subject to the window barrier provisions.

11.3.8 Protection of openable windows – rooms other than bedrooms

[2019: 3.9.2.7]

(1) A window opening in a room other than a bedroom must be provided with protection where the floor below the window is 4 m or more above the surface beneath.

(2) The openable part of the window covered by (1) must be protected with a barrier with a height of not less than 865 mm above the floor.

(3) A barrier *required* by (2) must not—

(a) permit a 125 mm sphere to pass through it; and

(b) have any horizontal or near horizontal elements between 150 mm and 760 mm above the floor that facilitate climbing.

Notes

Figure 11.3.8 illustrates requirements of this provision.

Figure 11.3.8: Protection of openable windows — rooms other than bedrooms

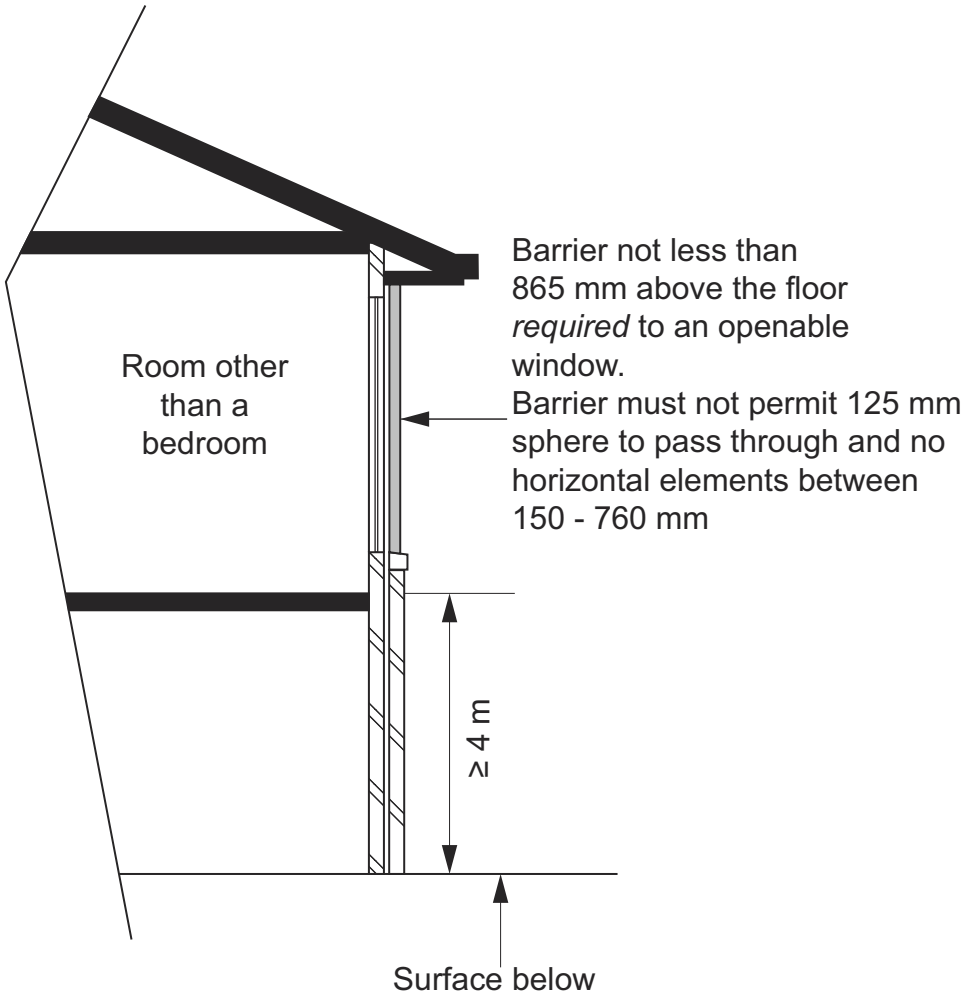

Explanatory Information: Intent

The intent of 11.3.8 is to reduce the risk of a person (especially a young child) falling through an openable window.

Explanatory Information: Protection of openable windows – rooms other than bedrooms

A wall beneath an openable window or fixed glazing under the openable part of a window which meets the height requirements (e.g. transom at least 865 mm above the floor) can be considered as the barrier, if the criteria in 11.3.8(2) are met.

Explanatory Information: Use of the term 'window'

The term "window" is not italicised in 11.3.8 and as such, is not restricted to the definition of "window" in the NCC. The reason for this is to also capture windows that may let in air but not light, e.g. metal louvres. A metal louvre or openable panel would not fit in the NCC definition of window but is subject to the window barrier provisions.

12 Ancillary provisions

Part 12.1 Scope and application of Section 12

12.1.1 Scope

12.1.2 Application

Part 12.2 Construction in alpine areas

12.2.1 Application

12.2.2 External doors

12.2.3 External trafficable structures

12.2.4 Clear spaces around buildings

Part 12.3 Attachment of framed decks and balconies to external walls of buildings using a waling plate

12.3.1 Application

12.3.2 Fixing decks and balconies to external walls

12.3.3 Flashings to the junction of the waling plate and external wall

12.3.4 Bracing

Part 12.4 Heating appliances, fireplaces, chimneys and flues

12.4.1 Application

12.4.2 Open fireplace construction

12.4.3 Chimney construction

12.4.4 Installation of insert fireplaces and flues

12.4.5 Installation of free standing heating appliances

Part 12.1 Scope and application of Section 12

12.1.1 Scope

[New for 2022]

(1) This Section sets out the *Deemed-to-Satisfy Provisions* for—

(a) construction in *alpine areas* (see Part 12.2); and

(b) attachment of decks and balconies to external walls (see Part 12.3); and

(c) heating appliances, fire places, chimneys and flues (see Part 12.4).

(2) For other ancillary provisions and additional construction requirements not included in this Section of the ABCB Housing Provisions, refer to the following *Deemed-to-Satisfy Provisions* in NCC Volume Two:

(a) *swimming pools* (see H7D2).

(b) earthquake areas (see H1D9).

(c) *flood hazard areas* (see H1D10).

(d) construction in *designated bushfire prone areas* (see H7D4).

12.1.2 Application

[New for 2022]

The application of this Section is subject to the following:

(a) The Governing Requirements of NCC Volume Two.

(b) The State and Territory variations, additions and deletions contained in the Schedules to the ABCB Housing Provisions and NCC Volume Two.

Explanatory Information

In NCC 2019, the content of Section 12 of the ABCB Housing Provisions (other than content added in NCC 2022 or later) was contained in the acceptable construction practices for Parts 3.10.4, 3.10.6 and 3.10.7 of NCC 2019 Volume Two.

In NCC 2019 Volume Two, Parts 3.10.1, 3.10.2, 3.10.3 and 3.10.5 did not include an acceptable construction practice.

Part 12.2 Construction in alpine areas

12.2.1 Application

[New for 2022]

Part 12.2 applies subject to the provisions at H7D3(2) and (3).

Explanatory Information

Buildings constructed in *alpine areas* need special consideration because of sub-zero temperatures which can create elements which restrict free movement to and from the building. The additional measures in this Part include—

- having external doorways open in a way that is not impeded by snow and ice outside; and
- for external trafficable structures forming part of the means of egress, being constructed so that they remain useable under snow conditions, and
- minimising the impact of snow build up between and around buildings.

Part 2.2 (structural provisions) and Section 13 (energy efficiency) also contain specific additional requirements for a building located in an *alpine area*.

12.2.2 External doors

[2019: 3.10.4.2]

External doors that may be subject to a build-up of snow must—

(a) open inwards or slide; and

(b) be constructed so that the threshold is not less than 900 mm above the adjoining surface; and

(c) in a Class 1b building, be marked "OPEN INWARDS" on the inside face of the door in letters not less than 75 mm high and in a colour contrasting with that of the background.

12.2.3 External trafficable structures

[2019: 3.10.4.3]

External stairways, ramps, access bridges or other trafficable structures serving the building must have—

(a) a floor surface that consists of expanded mesh if it is used as a means of egress; and

(b) any *required* barrier designed so that its sides are not less than 75% open; and

(c) for a stairway, *goings* (G), *risers* (R) and slope relationship quantity (2R + G) in accordance with—

(i) Table 11.2.2a; or

(ii) Table 12.2.3; and

(d) for a ramp serving an external doorway, a gradient not steeper than 1:12.

Table 12.2.3: Alternative stair riser and going dimensions

Maximum *risers* (R) (mm)	Minimum *risers* (R) (mm)	Maximum *going* (G) (mm)	Minimum *going* (G) (mm)	Maximum slope relationship (2R + G) (mm)	Minimum slope relationship (2R + G) (mm)
150	115	375	355	675	605

12.2.4 Clear spaces around buildings

[2019: 3.10.4.4]]

A building must be constructed so that—

(a) for any *external walls* more than 3.6 m above the natural ground level, the distance of that part of the building from the allotment boundary (other than a road alignment) must be not less than 2.5 m plus an additional 100 mm for each 300 mm or part by which that part of the *external wall* exceeds a height of 3.6 m (see Figure 12.2.4a); and

(b) if an external doorway discharges into a court between wings of a building and that area may be used for vehicle access to the building, the clear distance between wings must be not less than 4 m (see Figure 12.2.4b); and

(c) where an external doorway discharges opposite a feature that could trap snow or an embankment that is more than 900 mm above the threshold of that doorway, a minimum clear distance of not less than 4 m must be provided between the door and the feature (see Figure 12.2.4c and Figure 12.2.4d).

Figure 12.2.4a: Clear spaces around buildings — Set-back from allotment boundary where wall exceeds 3.6 m

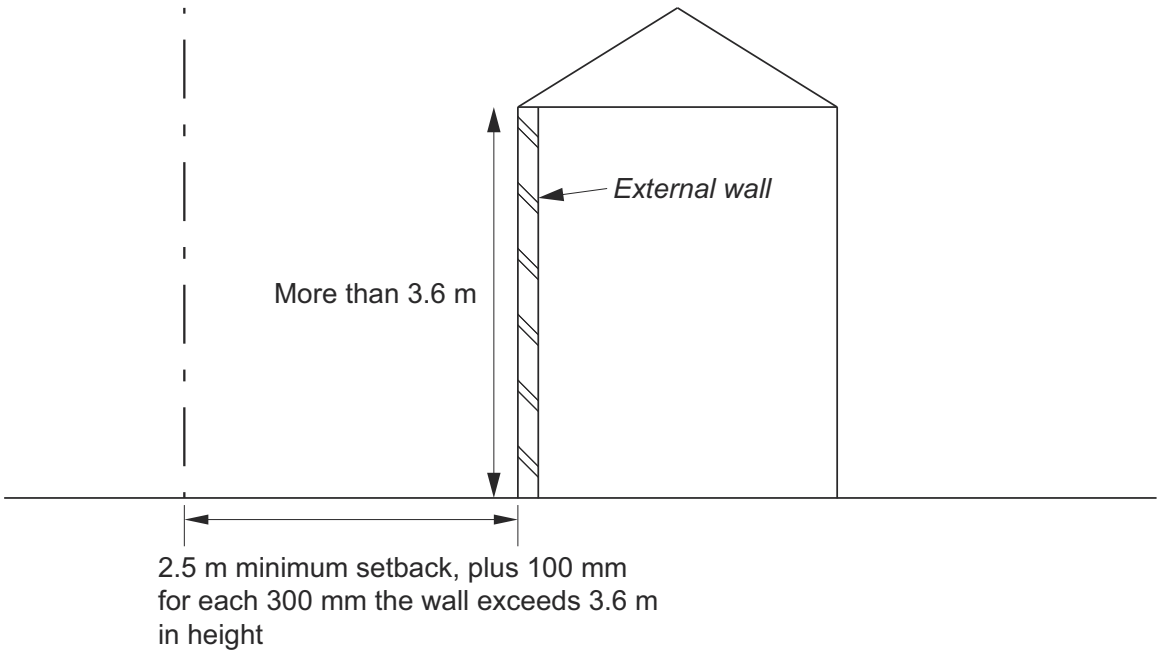

Figure 12.2.4b: Clear spaces around buildings — External doorway discharging into a court between wings of a building

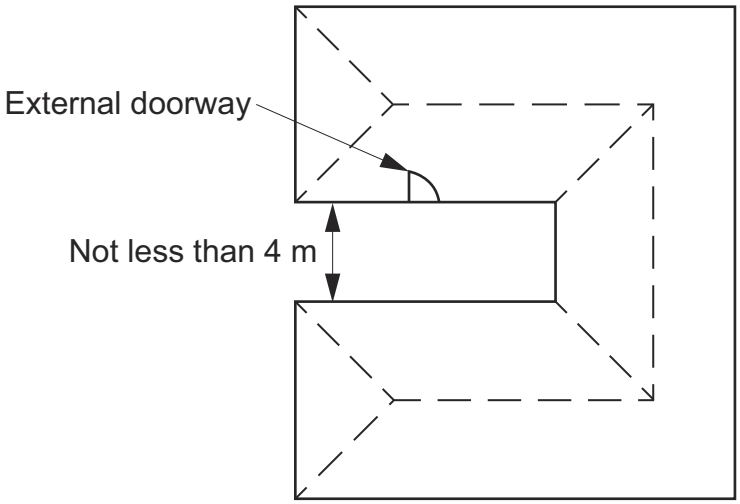

Figure 12.2.4c: Clear spaces around buildings — Embankments adjoining buildings

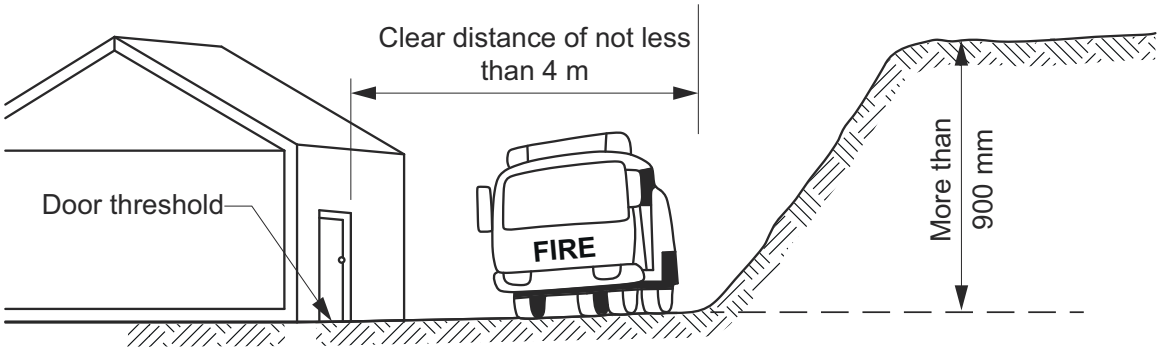

Figure 12.2.4d: Clear spaces around buildings — Use of a threshold where clear space is not available

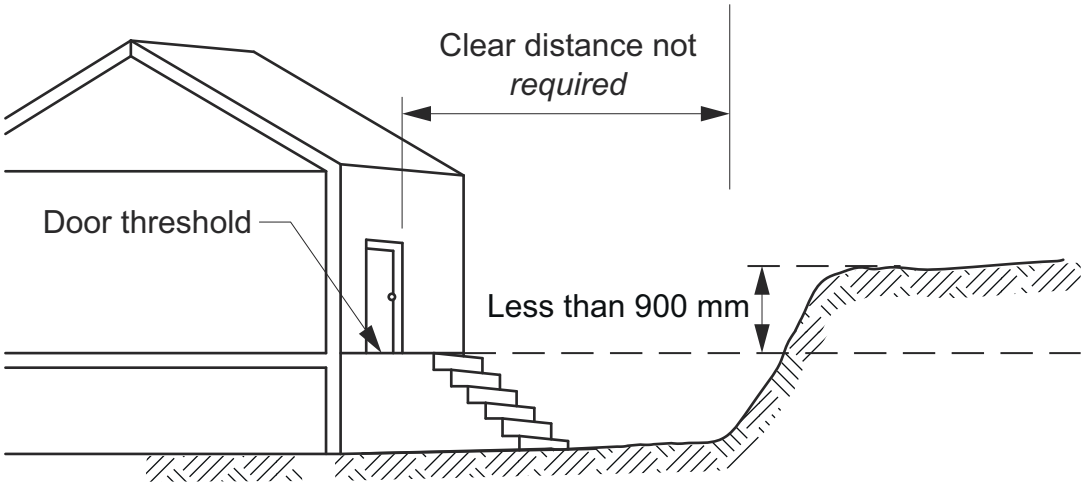

Explanatory Information: Snow build-up around buildings

The design and construction of a building in an *alpine area* must not aid dangerous levels of snow build-up between and around buildings. This control—

- assists with egress in an emergency; and
- helps vehicle access around the buildings, both for snow clearing and emergency situations; and
- minimises the risk of snow or ice falling from the roof onto adjoining lots or egress routes.

Explanatory Information: Set-back distances

12.2.4(a) prescribes set-back requirements for *external walls* from the boundary of adjoining allotments. The aim is to ensure that a reasonable distance is created between buildings to reduce the amount of snow build-up between properties. 12.2.4(a) applies only to the area adjacent to that part of the wall that is more than 3.6 m in height.

Explanatory Information: Distance between wings of buildings

12.2.4(b) prescribes a minimum distance between wings of a building or attached buildings where external doorways may discharge into this area. This requirement only applies where the court or wings are able to be accessed by vehicles.

Explanatory Information: Embankments adjoining buildings

12.2.4(c) applies where features adjacent to an external doorway could trap snow and complicate access and egress to and from the building.

Part 12.3 Attachment of framed decks and balconies to external walls of buildings using a waling plate

12.3.1 Application

[New for 2022]

Part 12.3 applies subject to the limitations set out at H1D11.

12.3.2 Fixing decks and balconies to external walls

[2019: 3.10.6.2]

Where a deck or balcony relies on the *external wall* of a building or structure for support, the method of attachment, including any fixings, to the *external wall* must comply with the following:

(a) The deck or balcony's joist framing members must be supported at the wall by a waling plate.

(b) The joist span nearest the *external wall* must not be more than 3 m (single or continuous span).

(c) The size of a waling plate *required* by (a) must be not less than—

(i) for a timber waling plate—

(A) 140 x 35 mm with a minimum stress grade of F5 or MGP10 when fixed to concrete core-filled masonry using M12 chemical or expanding/mechanical anchors; or

(B) 90 x 35 mm with a minimum stress grade of F5 or MGP10 when fixed to timber frames using No. 14 partial threaded self-drilling screws; or

(ii) for a steel waling plate — C15015 (minimum Grade G550) with the web located against the *external wall*.

(d) A waling plate must be attached so that—

(i) for core-filled reinforced concrete masonry *external walls*, fixings are staggered along the waling plate at not more than 300 mm centres measured along the waling plate; and

(ii) for timber *external wall* frames, two No. 14 Type screws are provided—

(A) into a solid joist or bearer framing member that is not less than 90 x 45 mm with a minimum stress grade of F5 or MGP10; and

(B) for deck construction— at not more than 450 mm centres measured along the waling plate; and

(C) for tiled balcony construction— at not more than 400 mm centres measured along the waling plate; and

(iii) for steel framed *external walls*, two fixings are provided into a joist or bearer framing member not less than C20015 (Grade G550) at not more than 300 mm centres measured along the waling plate; and

(iv) fixings are installed within 300 mm of each end of the waling plate, and in accordance with the following (as applicable):

(A) For a timber waling plate — deck construction: two No. 14 partial threaded self-drilling screws at not more than 450 mm centres and not located within 65 mm from the ends or within 30 mm from the top and bottom edges.

(B) For a timber waling plate — deck construction: M12 chemical or expanding/mechanical anchors at not more than 400 mm centres and not located within 120 mm from the ends or within 60 mm from the top and bottom edges.

(C) For a timber waling plate — tiled balcony construction: two No. 14 partial threaded self-drilling screws at not more than 400 mm centres and not located within 65 mm from the ends or within 30 mm from the top and bottom edges.

(D) For a timber waling plate — tiled balcony construction: M12 chemical or expanding/mechanical anchors at not more than 300 mm centres and not located within 120 mm from the ends or within 60 mm from the top and bottom edges.

(E) For a steel waling plate — not located within 50 mm from the ends or within 30 mm from the top and

bottom edges.

(e) Fixings for attaching a waling plate to an *external wall* must be—

(i) for timber *external wall* frames with a minimum stress grade of F5 or MGP 10, No. 14 partial threaded self-drilling screws so that each screw is embedded not less than 44 mm into the joist or bearer member (see Figure 12.3.2a); and

(ii) for steel *external wall* frames, 8.8/S M12 bolts with not less than 3 mm thick 55 mm diameter washers; and

(iii) for a core-filled masonry *external wall*, 4.6/S M12 chemical or expanding/mechanical anchors with—

(A) a minimum 2 kN working load capacity in shear and 1.5 kN in tension; and

(B) not less than 3 mm thick 55 mm diameter washers placed on the waling plate under the anchor head (see Figure 12.3.2b).

(f) Fixings used for attaching waling plates to *external walls* must be—

(i) stainless steel where the building is located within 200 m of *breaking surf*; or

(ii) hot-dipped galvanised, stainless steel or monel metal for all other areas.

Figure 12.3.2a: Methods of attachment — No. 14 partial threaded self-drilling screws into a timber framed external wall

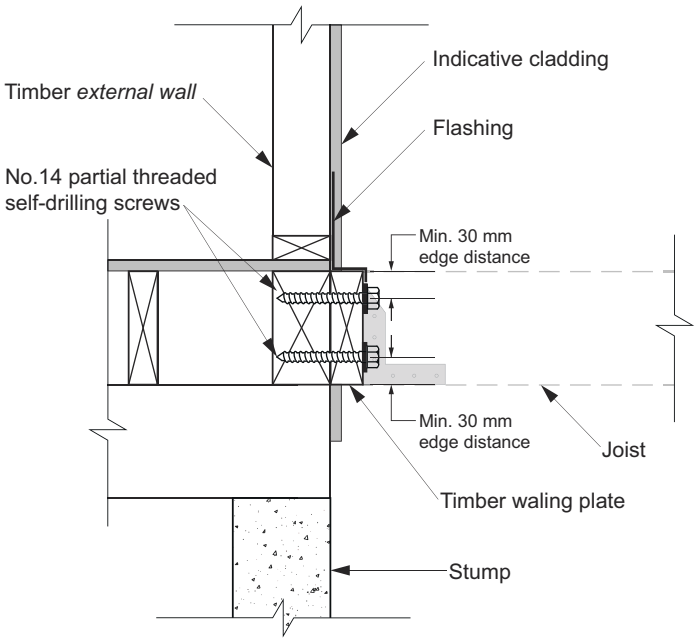

Figure 12.3.2b: Methods of attachment - 4.6/S M12 chemical or expanding/mechanical anchors into a core-filled reinforced masonry external wall

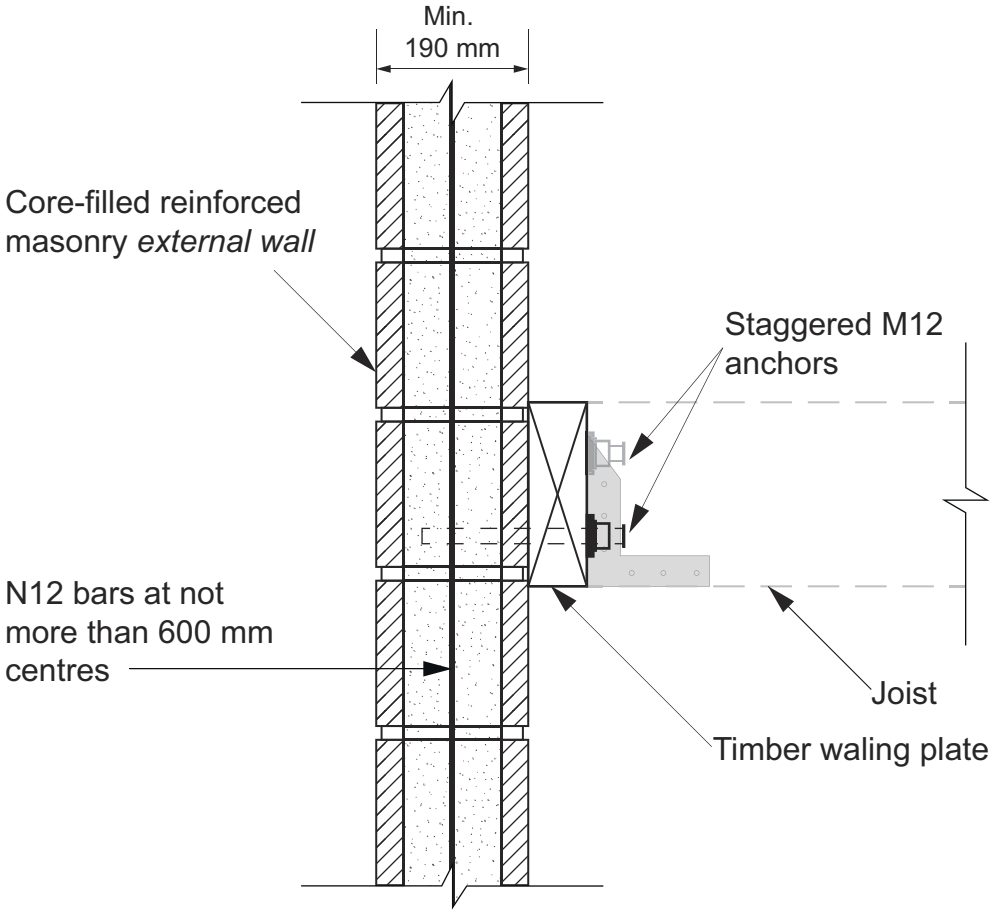

Explanatory Information

When using fixings specified in 12.3.2(d), care must be taken if chemical anchors are selected. The use of chemical anchors in horizontal applications is limited. Attention should be paid to selecting only chemical anchors that are specifically designed and manufactured for use in horizontal or overhead applications.

Consideration needs to be given to offsetting the waling plate fastener spacing to avoid interference with joist attachment. To ensure fasteners are positively anchored to the building or structure they need to be located so that they are not fixed into mortar beds between masonry units or fixed into blocking or the end grains of timbers.

An I-beam is not considered a solid joist or bearer framing member under 12.3.2(d)(ii) and is therefore not permitted as an appropriate method of support for attachment of a deck or balcony to an *external wall*.

The working load capacity of an anchor *required* by 12.3.2(e)(iii)(A) may be available in technical data provided by the manufacturer of the anchor.

The bolt category 4.6/S refers to a commercial bolt of a strength grade of 4.6 using a snug tight method of tensioning. AS 4100 contains information on tensioning techniques and the methods of determining the strength of an anchor.

Where the waling plate is fixed to the *external wall* through wall cladding, fixing length must be increased to compensate for the additional width of the cladding to ensure the connection to the *external wall* is structurally adequate.

All coach screwed joints should be pre-drilled with a pilot hole whose diameter is not greater than that of the threaded portion of the screw.

12.3.3 Flashings to the junction of the waling plate and external wall

[2019: 3.10.6.3]

Where the wall cladding is removed to attach a waling plate, openings in *external wall* cladding exposed to the weather must be flashed with materials complying with AS/NZS 2904 and in accordance with the following:

(a) *Flashings* must be provided to bottom, tops and the sides of the junction of the waling plate and the *external wall*, and must be installed so that the *flashing*—

(i) extends not less than 150 mm beyond each side of the waling plate where practicable; and

(ii) is attached to the waling plate and wall framing; and

(iii) at the top and bottom of the waling plate, drains to the outside face of the wall or cladding.

(b) Joins in the *flashing* must—

(i) overlap by not less than 75 mm in the direction of flow; and

(ii) be securely fastened at intervals of not more than 40 mm; and

(iii) have sealant installed between laps.

(c) The method of *flashing* must be suitable for the framing and cladding used.

(d) *Flashings* must be securely fixed at least 25 mm under the cladding at ends and edges of the framing of the opening.

Explanatory Information

Consideration needs to be given to the method of fixing the waling plate to the *external wall* so that deterioration of the *external wall* as a result of water entry will not occur. Such cases would include where the wall cladding is removed to attach a waling plate. This may be achieved by installing *flashing* between the *external wall* and the waling plate.

12.3.4 Bracing

[2019: 3.10.6.4]

Where a deck or balcony is more than 1 m off the ground when measured from the uppermost surface of the deck or balcony at any point to the top of any supporting footing, bracing must be installed as follows:

(a) Two diagonally opposed 30 x 0.8 mm galvanized steel straps must be installed across the top or underside of the joists and be attached using one fixing at—

(i) each joist or equivalent framing member; and

(ii) the waling plate.

(b) A secondary set of 30 x 0.8 mm steel straps must be installed using one fixing at each joist or equivalent framing member in accordance with Figure 12.3.4 where the deck or balcony extends more than 4 m from the *external wall*.

(c) The steel straps must—

(i) be continuous and extend diagonally at an angle between 30° to 60°; and

(ii) span not more than 4 m when measured along a line at a right angle from the *external wall*.

(d) Fixings for the steel straps must be—

(i) for timber framing, 50 x 3.15 hot-dipped galvanized flat head ring shank or flat head deformed nail; or

(ii) for steel framing, 8-18 self embedding head or wafer head screws.

(e) Where the deck or balcony is located within a severe corrosion environment, the bracing and fixings must comply with Table 6.3.9a, 6.3.9b and 6.3.9c.

Figure 12.3.4: Bracing of decks and balconies

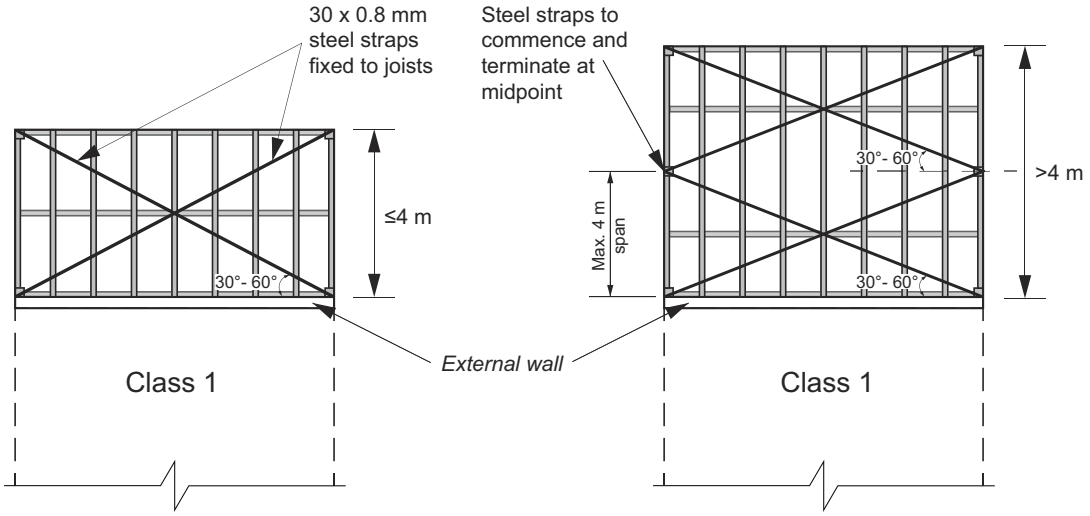

a) Decks or balconies extending up to 4 m from the *external wall*

b) Decks or balconies extending more than 4 m from the *external wall*

Part 12.4 Heating appliances, fireplaces, chimneys and flues

12.4.1 Application

[New for 2022]]

For the installation of a domestic solid fuel burning appliance, Part 12.4 need not be complied with if H7D5(a) is complied with.

12.4.2 Open fireplace construction

[2019: 3.10.7.2]

An open fireplace, or solid-fuel burning appliance in which the fuel-burning compartment is not enclosed must have—

(a) all masonry constructed in accordance with H1D5; and

(b) a hearth constructed of stone, concrete, masonry or similar *non-combustible* material so that—

(i) it extends not less than 300 mm beyond the front of the fireplace opening and not less than 150 mm beyond each side of that opening; and

(ii) its upper surface does not slope away from the back hearth (see Figure 12.4.2); and

(iii) *combustible* material, such as flooring or framing members below or around the external edge of the hearth, is situated not less than 150 mm from the upper surface of the hearth (see Figure 12.4.2); and

(c) walls forming the sides and back of the fireplace up to a height of 300 mm above the underside of the arch or lintel which—

(i) are constructed in 2 separate leaves of solid masonry with a total combined thickness not less than 180 mm, excluding any *cavity*; and

(ii) do not consist of concrete block masonry in the construction of the inner leaf; and

(iii) are constructed of masonry units with a net volume, excluding cored and similar holes, not less than 75% of their gross volume, measured on the overall rectangular shape of the units, and with an actual thickness of not less than 100 mm; and

(d) the fireplace must be constructed on footings complying with 4.2.18.

Figure 12.4.2: Fireplace clearance from combustible materials

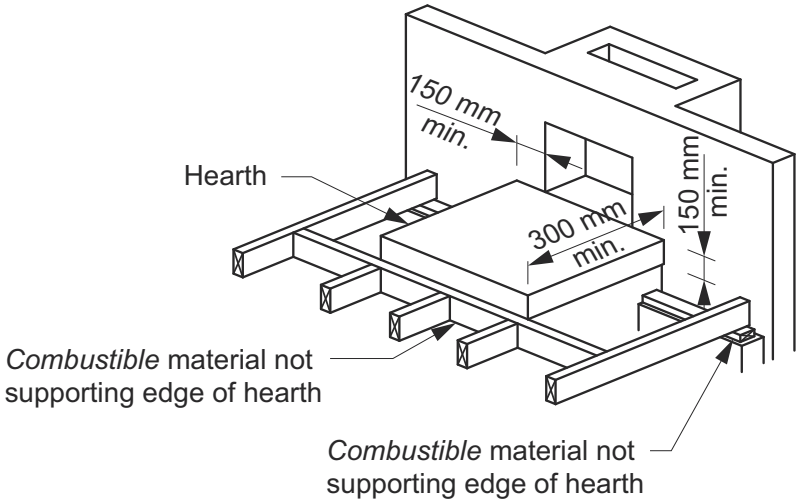

(a) View A

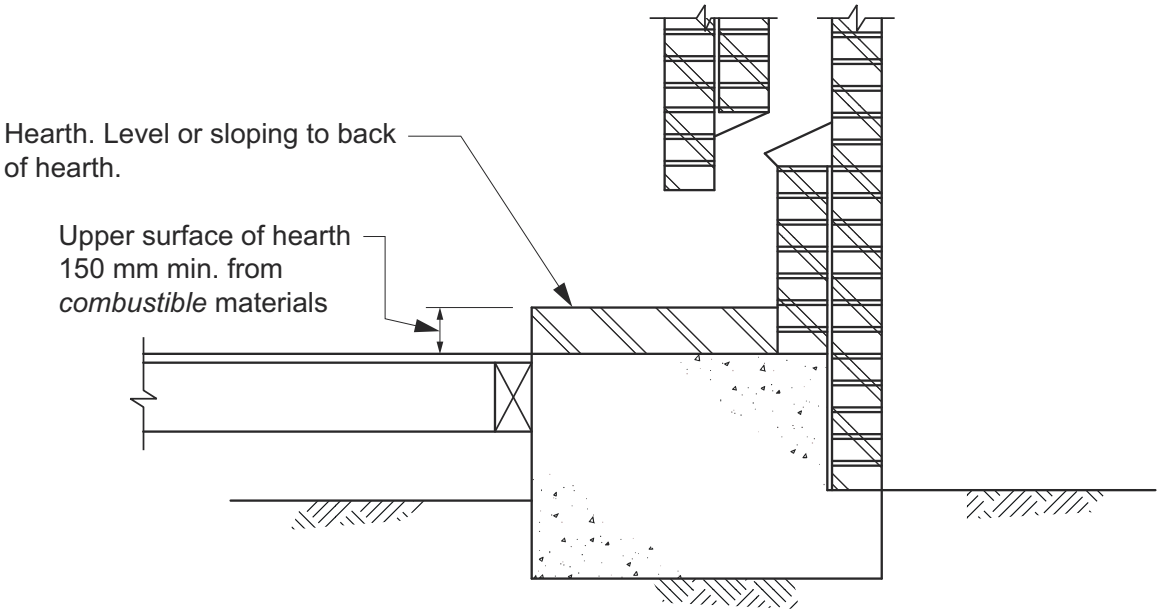

(b) View B

12.4.3 Chimney construction

[2019: 3.10.7.3]

The construction of a chimney must comply with H1D5 and the following:

(a) The walls of the chimney above the level referred to in 12.4.2(c) must be lined internally to a thickness of not less than 10 mm with composition mortar parging.

(b) The composition mortar in (a) must comply with AS 3700 or AS 4773 except that the mortar must be mixed by volume in the proportions of 1 part cement : 1 part lime : 5 parts sand.

(c) The chimney or flue must terminate not less than 300 mm above the highest part of the building within a horizontal distance of 3.6 m of the chimney or flue (see Figure 12.4.3).

Figure 12.4.3: Section showing height and position of chimney

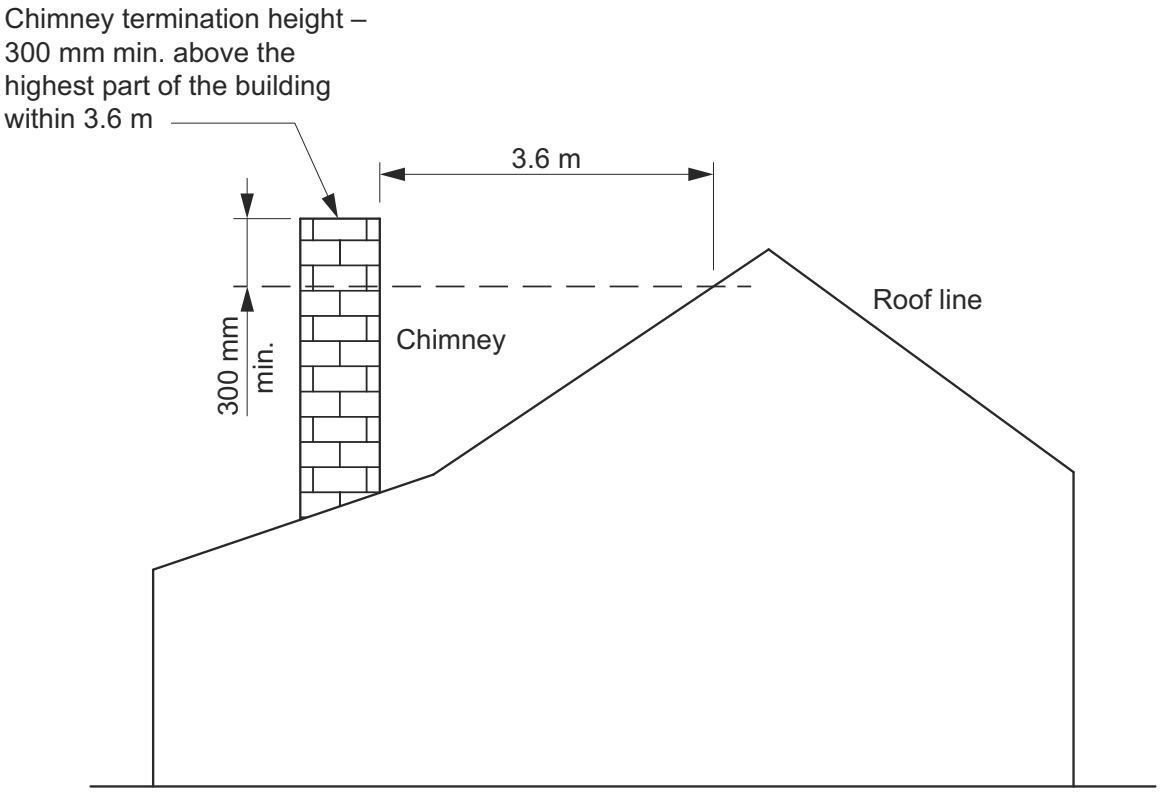

Explanatory Information

- The requirements of this Part are to be read in conjunction with the building sealing requirements in Part 13.4. However, it should be noted that Part 13.4 does not apply in all States and Territories.
- 12.4.3(a) requires the internal faces of masonry chimneys to be parged with a mortar to protect masonry elements and mortar beds from the corrosive by-products of combustion.

12.4.4 Installation of insert fireplaces and flues

[2019: 3.10.7.4]

An insert fireplace and flue must comply with the following:

(a) The insert fireplace and flue must be—

(i) tested and passed the tests required by AS/NZS 2918; and

(ii) fitted into a masonry fireplace (including chimney) constructed in accordance with H1D5 and Figure 12.4.4.

(b) The flue must be double skin and have been tested and pass the tests required by AS/NZS 2918.

(c) There must be a clearance of 50 mm between the outer flue and adjacent materials.

(d) The flue must terminate in accordance with Figure 12.4.3.

(e) The hearth must be constructed in accordance with 12.4.2(b) and (d).

Figure 12.4.4: Typical installation of fireplace flue inserts

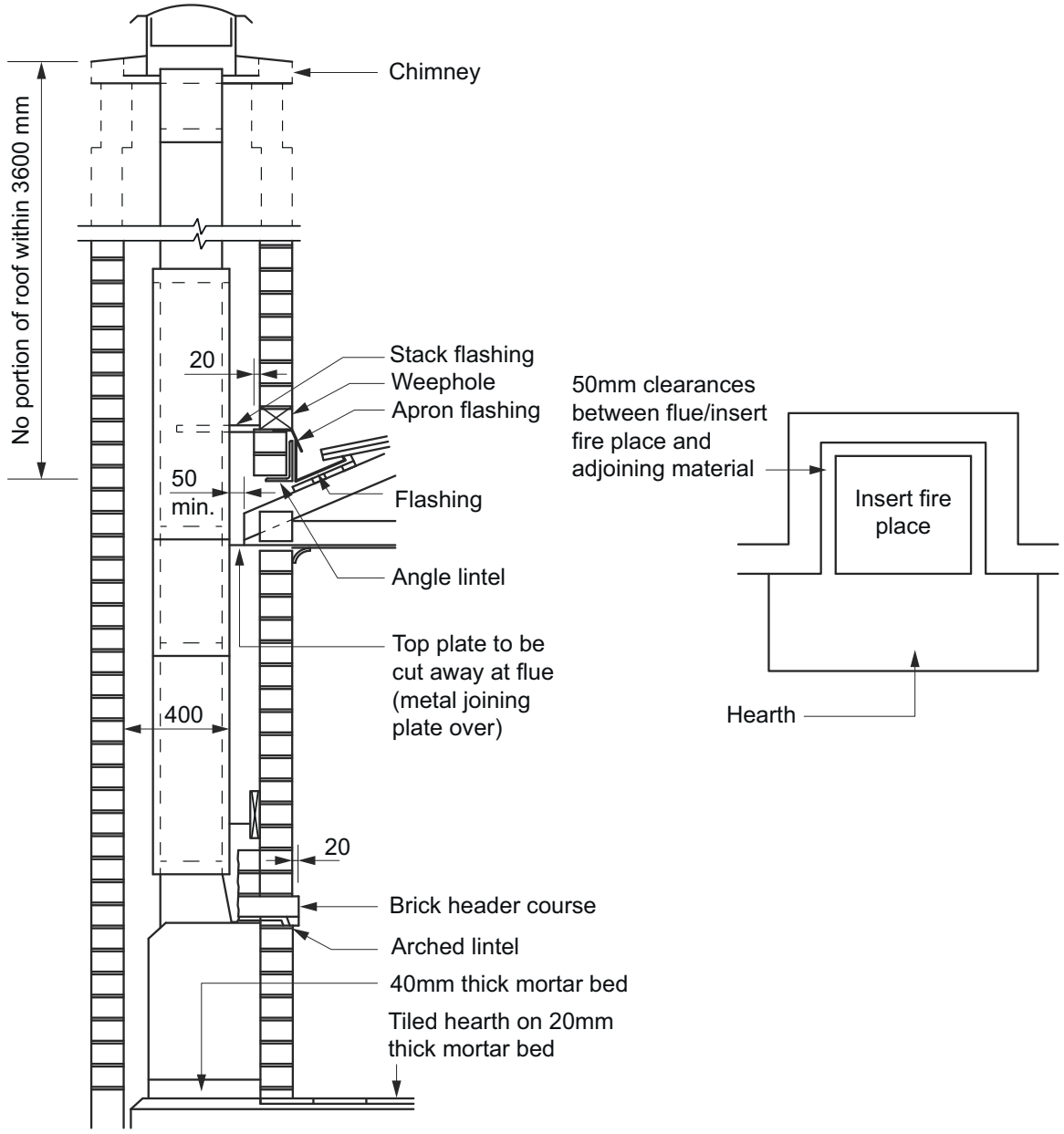

12.4.5 Installation of free standing heating appliances

[2019: 3.10.7.5]

The installation of a free standing heating appliance must comply with the following:

(a) The appliance must—

(i) be installed with safety clearances determined by testing in accordance with AS/NZS 2918; or

(ii) be located not less than 1.2 m from adjoining walls (other than a masonry wall); or

(iii) have a heat shield between the adjoining wall (other than a masonry wall) and the heating appliance in accordance with Figure 12.4.5a and Figure 12.4.5b.

(b) Where a heat shield is used, it must be installed in accordance with Figure 12.4.5a and Figure 12.4.5b, and—

(i) have an FRL of not less than 60/60/60; or

(ii) be not less than 90 mm thick masonry constructed in accordance with H1D5.

(c) The heating appliance must be installed on a hearth—

(i) complying with 12.4.2(b), except that the hearth must extend 400 mm from the front and sides of the appliance in accordance with Figure 12.4.5a and Figure 12.4.5b; or

(ii) where a heat shield is installed, in accordance with Figure 12.4.5a and Figure 12.4.5b.

(d) The flue must—

(i) have been tested and passed the tests required by AS/NZS 2918; and

(ii) be installed in accordance with Figure 12.4.5c; and

(iii) terminate in accordance with Figure 12.4.3; and

(iv) be flashed in accordance with H1D7.

(e) Flue types or installation of flues in areas not specifically covered by Figure 12.4.5a and Figure 12.4.5b and Figure 12.4.5c must be installed in accordance with AS/NZS 2918.

Figure 12.4.5a: Acceptable location of free standing heating appliances — Elevation

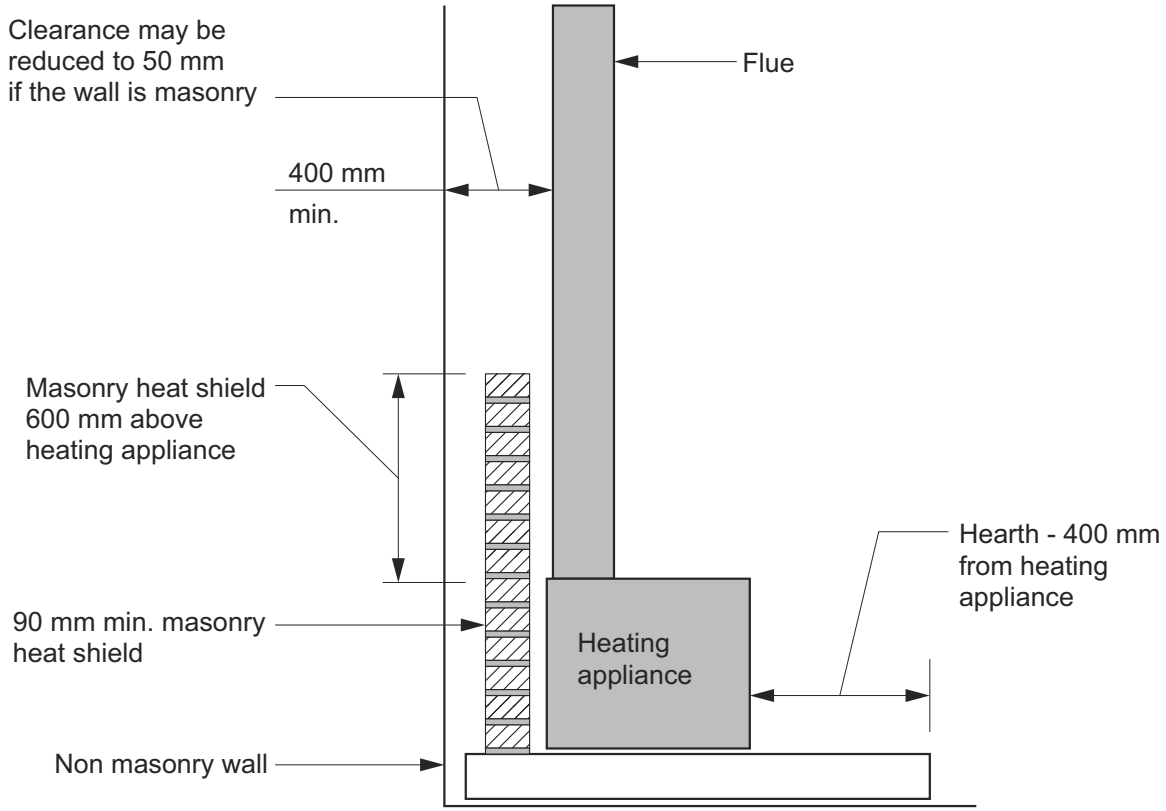

Figure 12.4.5b: Acceptable location of free standing heating appliances — Plan view

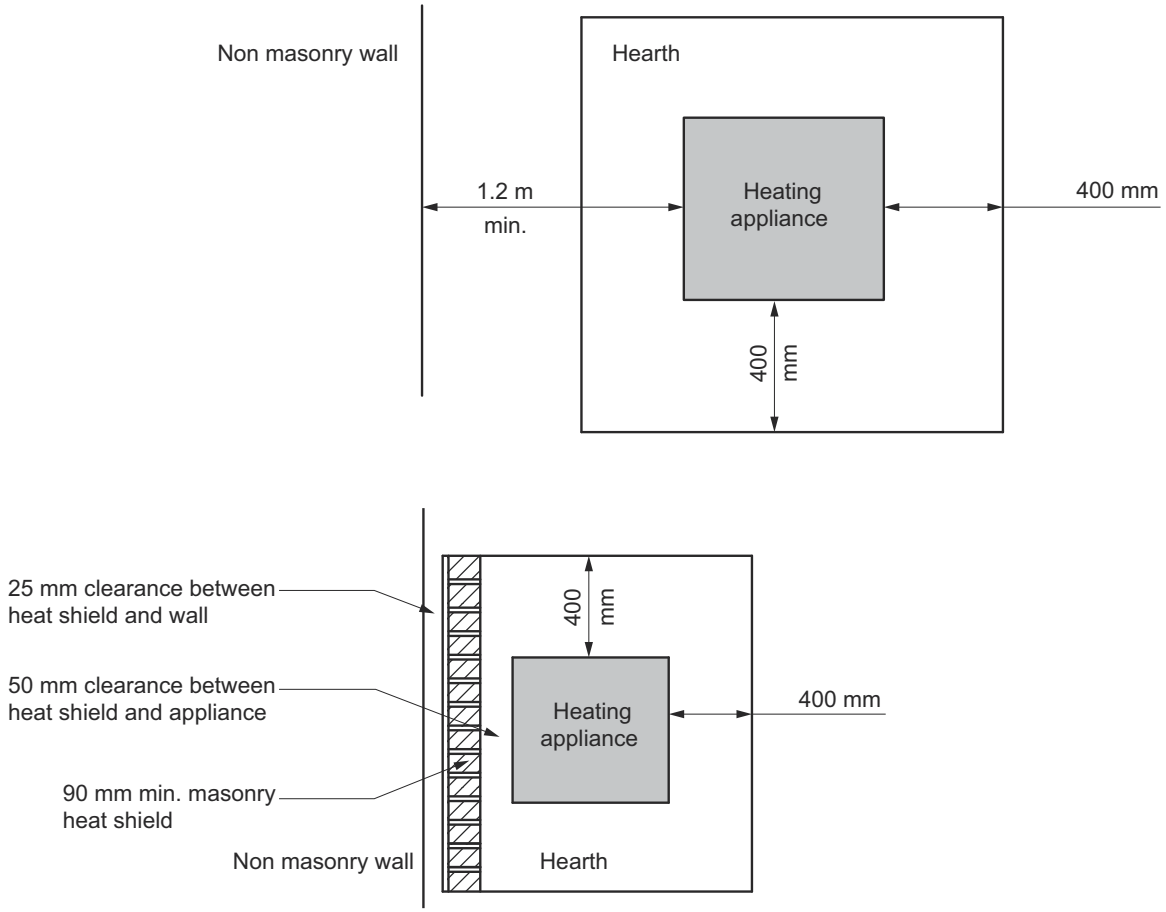

Figure 12.4.5c: Acceptable flue installation details

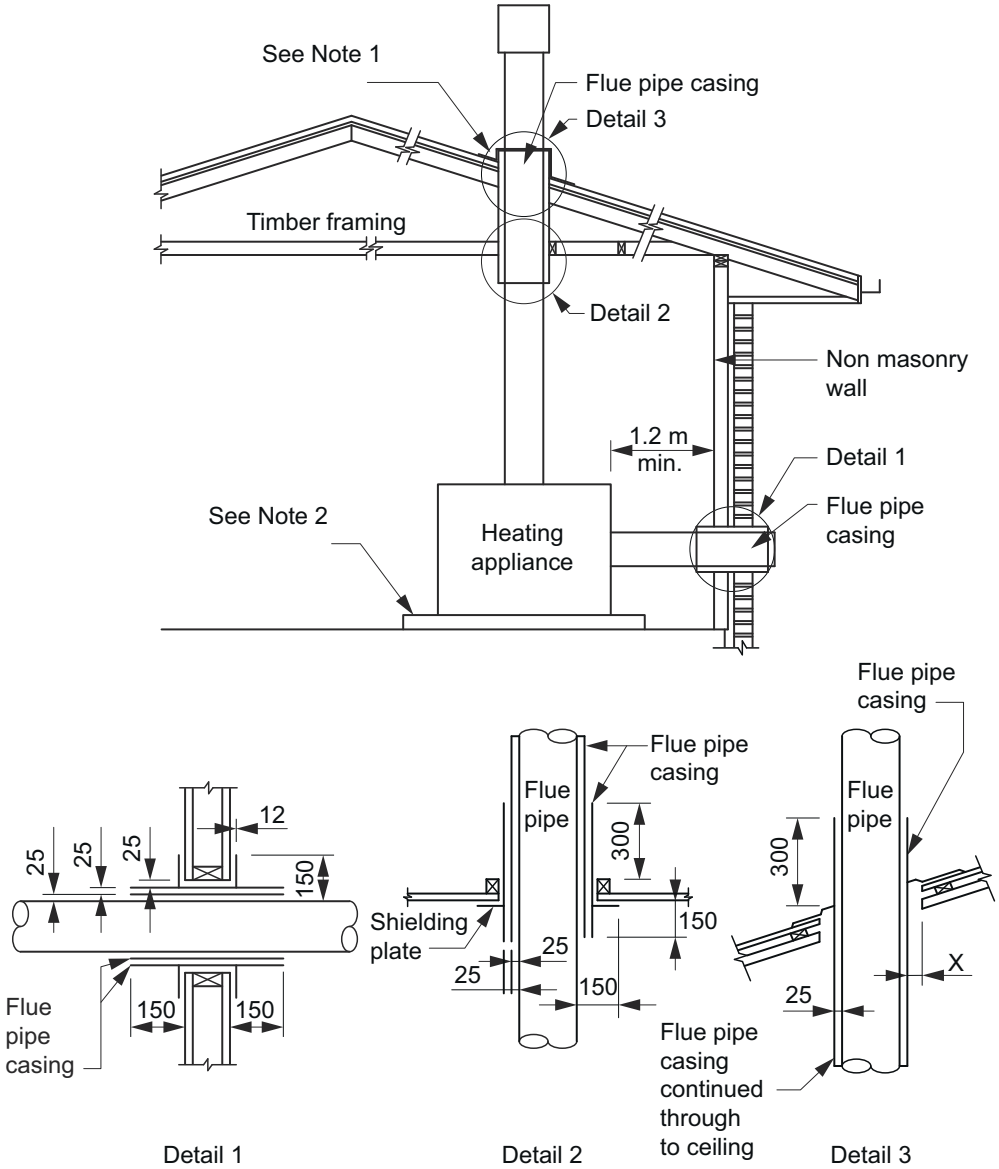

Figure Notes

(1) Roof flashing – see H1D7(2).

(2) Hearth – see 12.4.5.

(3) Flue pipe size — 150 mm maximum (for other sizes see AS/NZS 2918).

Explanatory Information

References to AS/NZS 2918 in 12.4.5(a)(i) and (d)(i) are only applicable in the context in which they are referred to in accordance with A4G1(2). 12.4.5(a) provides three options for the installation of free standing heating appliances. Where 12.4.5(a)(i) is chosen as a solution the free standing heating appliance must be installed with safety clearances determined by testing in accordance with AS/NZS 2918. 12.4.5(d)(i), in addition to (d)(ii) and (d)(iii), require the flue to be tested and have passed the tests required by AS/NZS 2918.

13 Energy efficiency

Part 13.1 Scope and application of Section 13

13.1.1 Scope
13.1.2 Application

Part 13.2 Building fabric

13.2.1 Application of Part 13.2
13.2.2 Building fabric thermal insulation
13.2.3 Roofs and ceilings
13.2.4 Roof lights
13.2.5 External walls
13.2.6 Floors and subfloor walls
13.2.7 Attached Class 10a buildings

Part 13.3 External glazing

13.3.1 Application of Part 13.3
13.3.2 External glazing — winter
13.3.3 External glazing — summer
13.3.4 Shading

Part 13.4 Building sealing

13.4.1 Application of Part 13.4
13.4.2 Chimneys and flues
13.4.3 Roof lights
13.4.4 External windows and doors
13.4.5 Exhaust fans
13.4.6 Construction of ceilings, walls and floors
13.4.7 Evaporative coolers

Part 13.5 Ceiling fans

13.5.1 Application of Part 13.5
13.5.2 Ceiling fans

Part 13.6 Whole-of-home energy usage

13.6.1 Application of Part 13.6
13.6.2 Net equivalent energy usage

Part 13.7 Services

13.7.1 Application of Part 13.7
13.7.2 Insulation of services
13.7.3 Central heating water piping
13.7.4 Heating and cooling ductwork
13.7.5 Electric resistance space heating
13.7.6 Artificial lighting
13.7.7 Water heater in a heated water supply system
13.7.8 Swimming pool heating and pumping
13.7.9 Spa pool heating and pumping

Part 13.1 Scope and application of Section 13

NSW Part 13.1
NT Part 13.1
TAS Part 13.1

13.1.1 Scope

[New for 2022]

This Section sets out the following *Deemed-to-Satisfy Provisions* for energy efficiency:

(a) Building fabric (see Part 13.2).

(b) External glazing (see Part 13.3).

(c) Building sealing (see Part 13.4).

(d) Ceiling fans (see Part 13.5).

(e) Whole-of-home energy usage (see Part 13.6).

(f) Services (see Part 13.7).

SA 13.1.2

13.1.2 Application

[New for 2022]

The application of this Section is subject to the following:

(a) The Governing Requirements of NCC Volume Two.

(b) The State and Territory variations, additions and deletions contained in the Schedules to the ABCB Housing Provisions and NCC Volume Two.

Explanatory Information

In NCC 2019, the content of Section 13 of the ABCB Housing Provisions (other than content added in NCC 2022 or later) was contained in the acceptable construction practices for Part 3.12 of NCC 2019 Volume Two.

Part 13.2 Building fabric

NT Part 13.2

TAS Part 13.2

NSW 13.2.1

13.2.1 Application of Part 13.2

[2019: 3.12.1]

(1) The provisions of 13.2.2 to 13.2.6 apply to—

(a) a Class 1 building; and

(b) a Class 10a building with a *conditioned space*.

(2) The provisions of 13.2.7 apply to a Class 1 building with an attached Class 10a building.

(3) Part 13.2 must be applied as directed in H6D2(1)(a) or (b).

13.2.2 Building fabric thermal insulation

[2019: 3.12.1.1]

(1) Where *required*, insulation must comply with AS/NZS 4859.1 and be installed so that it—

(a) abuts or overlaps adjoining insulation other than at supporting members such as columns, studs, noggings, joists, furring channels and the like where the insulation must butt against the member; and

(b) forms a continuous barrier with ceilings, walls, bulkheads, floors or the like that inherently contribute to the thermal barrier; and

(c) does not affect the safe or effective operation of a *domestic service* or fitting.

(2) Where *required*, *reflective insulation* must be installed with—

(a) the necessary airspace, to achieve the required *R-Value* between a reflective side of the *reflective insulation* and a building lining or cladding; and

(b) the *reflective insulation* closely fitted against any penetration, door or *window* opening; and

(c) the *reflective insulation* adequately supported by framing members; and

(d) each adjoining sheet of roll membrane being—

(i) overlapped greater than or equal to 150 mm; or

(ii) taped together.

(3) Where *required*, bulk insulation must be installed so that—

(a) it maintains its position and thickness, other than where it crosses roof battens, water pipes, electrical cabling or the like; and

(b) in a ceiling, where there is no bulk insulation or *reflective insulation* in the *external wall* beneath, it overlaps the *external wall* by greater than or equal to 50 mm.

Explanatory Information: Example

- In a two storey house with the second storey set back, the insulation in the first storey wall, the second storey wall and the roof over the set-back must be continuous. Therefore if the roof over the set-back has insulation on a horizontal ceiling, then insulation is also needed on the vertical in any ceiling space in order to connect the ceiling insulation to the second storey wall.
- To form a continuous barrier, insulation should be placed in gaps between window and door jambs, heads and sills, and the adjoining wall framing unless a gap is otherwise *required*. This may need to be compressible to allow for movement between members.

Explanatory Information: Safety of domestic services

Care should be taken when installing insulation to ensure that it does not interfere with the safety or performance of *domestic services* and fittings such as heating flues, recessed light fittings, light transformers, gas appliances and general plumbing and electrical components. This includes providing appropriate clearance as detailed in relevant legislation and referenced standards such as for electrical, gas and fuel oil installations.

Explanatory Information: Compression of insulation

The *R-Value* of insulation, including insulation used to mitigate thermal bridging, is reduced if it is compressed. The allocated space for insulation must therefore allow the insulation to be installed so that it maintains its correct thickness to achieve the product's stated *R-Value*. Otherwise the *R-Value* needs to be reduced to account for any compression. This is particularly relevant to wall and cathedral ceiling framing whose members can only accommodate a limited thickness of insulation. In some instances, larger framing members or thinner insulation material, such as rigid boards, may be necessary to ensure that the insulation achieves its *required R-Value*.

Explanatory Information: Installation of reflective insulation

For *reflective insulation* and the adjoining airspace to achieve its tested *R-Value*, the airspace needs to be a certain width. This width varies depending on the particular type of *reflective insulation*. The *R-Value* also depends on the orientation of the insulation.

Where *reflective insulation* also acts as a vapour barrier or sarking, both a minimum overlap and taping may be necessary.

NSW 13.2.3

13.2.3 Roofs and ceilings

[2019: 3.12.1.2]

(1) Roof and ceiling insulation must achieve the minimum *R-Value*—

(a) in *climate zone* 1, in accordance with Tables 13.2.3a, 13.2.3b, 13.2.3j and 13.2.3k as applicable; and

(b) in *climate zone* 2, in accordance with Tables 13.2.3c and 13.2.3l as applicable; and

(c) in *climate zone* 3, in accordance with Tables 13.2.3d and 13.2.3m as applicable; and

(d) in *climate zone* 4, in accordance with Tables 13.2.3e and 13.2.3n as applicable; and

(e) in *climate zone* 5, in accordance with Tables 13.2.3f and 13.2.3o as applicable; and

(f) in *climate zone* 6, in accordance with Tables 13.2.3g and 13.2.3p as applicable; and

(g) in *climate zone* 7, in accordance with Tables 13.2.3h and 13.2.3q as applicable; and

(h) in *climate zone* 8, in accordance with Tables 13.2.3i and 13.2.3r as applicable.

(2) *Reflective insulation* installed to comply with (1) must—

(a) have a surface emittance of not more than 0.05; and

(b) be adjacent to a roof space of not less than 20 mm; and

(c) in *climate zones* 3 to 8, be downward facing.

(3) The thermal bridging in a metal-framed roof must be addressed as follows—

(a) for a pitched roof with a horizontal ceiling—

(i) achieving the *Total R-Value* in Table 13.2.3s, calculated using a method that accounts for the effects of thermal bridging; or

(ii) increasing the *R-Value* of the insulation between the ceiling frames by R0.5 more than the *R-Value* derived from (1); or

(iii) adding a continuous ceiling insulation layer with a minimum *R-Value* of R0.13 above or below the ceiling joists or the bottom chords of the trusses; or

(iv) achieving the *required* ceiling *R-Value* derived from (1) by stacking two layers of insulation immediately on

top of each other, such that the top layer is orientated to cover the ceiling joists or bottom chords of the trusses and has an *R-Value* of at least R0.5; or

(b) for a flat, skillion or cathedral roof—

(i) achieving the *Total R-Value* in Table 13.2.3t, calculated using a method that accounts for the effects of thermal bridging; or

(ii) complying with Table 13.2.3u.

(4) Where 10.8.3(1) of the ABCB Housing Provisions applies, continuous insulation placed above the *primary insulation layer* to mitigate thermal bridging must have a *vapour permeance* of not less than that of the *primary insulation layer*.

(5) Where, for operational or safety reasons, the area of ceiling insulation *required* is reduced, the loss of insulation must be compensated for in accordance with Table 13.2.3w.

(6) Where the ceiling insulation *required* by (1) to (5) has an *R-Value*—

(a) greater than R3.0 and less than or equal to R4.5, it may be reduced to R3.0 within 450 mm of an *external wall*; or

(b) greater than R4.5, it may be reduced to R3.0 within 450 mm of an *external wall*, provided all other *required* ceiling insulation is increased by R0.5.

(7) A roof that—

(a) has metal sheet roofing directly fixed to metal purlins, metal rafters or metal battens; and

(b) does not have a ceiling lining or has a ceiling lining fixed directly to those metal purlins, metal rafters or metal battens,

must have a thermal break, consisting of a material with an *R-Value* of greater than or equal to 0.2, installed between the metal sheet roofing and its supporting metal purlins, metal rafters or metal battens.

(8) The requirements of (1) to (7) do not apply to roofs constructed using insulated sandwich panels.

(9) Roofs constructed using insulated sandwich panels must achieve the minimum *Total R-Value* in Table 13.2.3x.

(10) In *climate zones* 1 to 5, the solar absorptance of the upper surface of a roof must not be more than 0.64.

Table 13.2.3a: Pitched roof with horizontal ceiling – minimum R-Value for ceiling insulation: climate zone 1 – single storey dwelling

Roof ventilation	*Reflective insulation* under-roof	Under-roof insulation *R-Value*	SA ≤ 0.23	0.23 < SA ≤ 0.32	0.32 < SA ≤ 0.42	0.42 < SA ≤ 0.53	0.53 < SA ≤0 .64
Vented	Yes	< 1.0	1.5	2.0	2.5	3.0	3.5
		≥ 1.0 to < 1.5	1.5	1.5	2.0	2.5	3.0
		≥ 1.5	1.5	2.0	2.0	2.0	2.0
	No	< 1.0	2.5	4.5	X	X	X
		≥ 1.0 to < 1.5	2.0	3.0	4.0	5.0	X
		≥ 1.5	2.0	2.5	3.0	4.0	5.0
Standard	Yes	< 1.0	1.5	2.0	2.5	4.0	X
		≥ 1.0 to < 1.5	1.5	1.5	2.0	3.0	4.0
		≥ 1.5	1.5	1.5	2.0	2.5	3.0
	No	< 1.0	3.5	X	X	X	X
		≥ 1.0 to < 1.5	2.0	3.5	5.5	X	X
		≥ 1.5	2.0	2.0	3.5	4.0	6.0

Table Notes

(1) SA = solar absorptance.

(2) A roof is considered 'vented' if it—

(a) has one wind-driven roof ventilator per 50 m^2 of ceiling area, with gable, eave or ridge vents; or

(b) has one powered roof ventilator per 200 m^2 of ceiling area, with gable, eave or ridge vents; or

(c) is a tiled roof without *sarking-type material* at roof level.

(3) If a roof is not 'vented', it is a 'standard' roof.

(4) The *R-Value* of *reflective insulation* is not to be included in the *R-Value* of any under-roof or ceiling insulation.

(5) *R-Values* listed are for the labelled, declared *R-Value* of insulation.

(6) X = not permitted.

Table 13.2.3b: Pitched roof with horizontal ceiling – minimum R-Value for ceiling insulation: climate zone 1 – two (or more) storey dwelling

Roof ventilation	*Reflective insulation* under-roof	Under-roof insulation *R-Value*	SA≤ 0.23	0.23< SA≤0.32	0.32< SA≤0.42	0.42< SA≤0.53	0.53< SA≤0.64
Vented	Yes	< 1.0	1.5	1.5	1.5	1.5	2.0
		≥ 1.0 to < 1.5	1.5	1.5	1.5	1.5	1.5
		≥ 1.5 to < 2.0	1.5	1.5	1.5	1.5	1.5
		≥ 2.0	1.5	1.5	1.5	2.0	2.0
	No	< 1.0	2.0	2.5	4.0	5.0	X
		≥ 1.0 to < 1.5	1.5	1.5	1.5	1.5	2.5
		≥ 1.5 to < 2.0	1.5	1.5	1.5	2.0	2.0
		≥ 2.0	1.5	1.5	1.5	1.5	1.5
Standard	Yes	< 1.0	1.5	1.5	2.0	3.0	4.0
		≥ 1.0 to < 1.5	1.5	1.5	1.5	1.5	2.5
		≥ 1.5 to < 2.0	1.5	1.5	1.5	1.5	2.0
		≥ 2.0	1.5	1.5	1.5	1.5	1.5
	No	< 1.0	2.5	4.0	6.0	X	X
		≥ 1.0 to < 1.5	1.5	1.5	1.5	1.5	4.0
		≥ 1.5 to < 2.0	1.5	1.5	2.0	2.0	2.5
		≥ 2.0	1.5	1.5	1.5	2.0	2.5

Table Notes

(1) SA = solar absorptance.

(2) A roof is considered 'vented' if it—

(a) has one wind-driven roof ventilator per 50 m^2 of ceiling area, with gable, eave or ridge vents; or

(b) has one powered roof ventilator per 200 m^2 of ceiling area, with gable, eave or ridge vents; or

(c) is a tiled roof without *sarking-type material* at roof level.

(3) If a roof is not 'vented', it is a 'standard' roof.

(4) The *R-Value* of *reflective insulation* is not to be included in the *R-Value* of any under-roof or ceiling insulation.

(5) *R-Values* listed are for the labelled, declared *R-Value* of insulation.

(6) X = not permitted.

Table 13.2.3c: Pitched roof with horizontal ceiling – minimum R-Value for ceiling insulation: climate zone 2

Roof ventilation	*Reflective insulation* under-roof	Under-roof insulation *R-Value*	SA ≤ 0.23	0.23 < SA ≤ 0.32	0.32 < SA ≤ 0.42	0.42 < SA ≤ 0.64
Vented	Yes	Any	2.5			
	No	< 0.5	2.5	3.0	3.0	3.5
		≥ 0.5	2.5			
Standard	Yes	Any	2.5			
	No	< 0.5	3.0	3.0	3.5	4.0
		≥ 0.5 to < 1.0	2.5	2.5	2.5	3.0
		≥ 1.0	2.5			

Table Notes

(1) SA = solar absorptance.

(2) A roof is considered 'vented' if it—

(a) has one wind-driven roof ventilator per 50 m^2 of ceiling area, with gable, eave or ridge vents; or

(b) has one powered roof ventilator per 200 m^2 of ceiling area, with gable, eave or ridge vents; or

(c) is a tiled roof without *sarking-type material* at roof level.

(3) If a roof is not 'vented', it is a 'standard' roof.

(4) The *R-Value* of *reflective insulation* is not to be included in the *R-Value* of any under roof or ceiling insulation.

(5) *R-Values* listed are for the labelled, declared *R-Value* of insulation.

Table 13.2.3d: Pitched roof with horizontal ceiling – minimum R-Value for ceiling insulation: climate zone 3

Roof ventilation	*Reflective insulation* under-roof	Under-roof insulation *R-Value*	SA ≤ 0.23	0.23 < SA ≤ 0.32	0.32 < SA ≤ 0.42	0.42 < SA ≤ 0.53	0.53 < SA ≤ 0.64
Vented	Yes	< 0.5	2.5				
		≥ 0.5 to < 1.0	2.0				
		≥ 1.0 to < 1.5	2.0	2.5	2.5	2.5	2.5
		≥ 1.5 to < 2.0	2.0	2.0	2.5	2.5	2.5
		≥ 2.0	2.5	2.5	3.0	3.0	3.0
	No	< 0.5	3.5	4.0	4.5	5.0	X
		≥ 0.5 to < 1.0	3.0	3.5	3.5	4.0	4.5
		≥ 1.0 to < 1.5	2.5	3.0	3.0	3.0	3.5
		≥ 1.5 to < 2.0	2.5	3.0	3.0	3.0	3.0
		≥ 2.0	2.5	2.5	3.0	3.0	3.0
Standard	Yes	< 0.5	2.0	2.0	2.5	2.5	2.5
		≥ 0.5 to < 1.0	2.0	2.0	2.5	2.5	2.5
		≥ 1.0 to < 1.5	2.0	2.0	2.0	2.0	2.5
		≥ 1.5 to < 2.0	2.0	2.5	2.5	2.5	3.0
		≥ 2.0	2.0	2.0	2.5	2.5	2.5
	No	< 0.5	3.5	4.0	5.0	X	X
		≥ 0.5 to < 1.0	3.0	3.0	3.5	4.0	5.0
		≥ 1.0 to < 1.5	2.5	2.5	3.0	3.0	3.5

Roof ventilation	*Reflective insulation* under-roof	Under-roof insulation *R-Value*	SA ≤ 0.23	0.23 < SA ≤ 0.32	0.32 < SA ≤ 0.42	0.42 < SA ≤ 0.53	0.53 < SA ≤ 0.64
		≥ 1.5 to < 2.0	2.0	2.0	2.5	2.5	2.5
		≥ 2.0	2.0	2.0	2.5	2.5	2.5

Table Notes

(1) SA = solar absorptance.

(2) A roof is considered 'vented' if it—

(a) has one wind-driven roof ventilator per 50 m^2 of ceiling area, with gable, eave or ridge vents; or

(b) has one powered roof ventilator per 200 m^2 of ceiling area, with gable, eave or ridge vents; or

(c) is a tiled roof without *sarking-type material* at roof level.

(3) If a roof is not 'vented', it is a 'standard' roof.

(4) The *R-Value* of *reflective insulation* is not to be included in the *R-Value* of any under-roof or ceiling insulation.

(5) *R-Values* listed are for the labelled, declared *R-Value* of insulation.

(6) X = not permitted.

Table 13.2.3e: Pitched roof with horizontal ceiling – minimum R-Value for ceiling insulation: climate zone 4

Roof ventilation	*Reflective insulation* under-roof	Under-roof insulation *R-Value*	SA ≤ 0.23	0.23 < SA ≤ 0.64
Vented	Yes	< 0.5	3.0	3.5
		≥ 0.5	3.0	
	No	Any	3.5	
Standard	Yes	Any	3.0	
	No	≤ 0.5	3.5	
		> 0.5	3.0	

Table Notes

(1) SA = solar absorptance.

(2) A roof is considered 'vented' if it—

(a) has one wind-driven roof ventilator per 50 m^2 of ceiling area, with gable, eave or ridge vents; or

(b) has one powered roof ventilator per 200 m^2 of ceiling area, with gable, eave or ridge vents; or

(c) is a tiled roof without *sarking-type material* at roof level.

(3) If a roof is not 'vented', it is a 'standard' roof.

(4) The *R-Value* of *reflective insulation* is not to be included in the *R-Value* of any under-roof or ceiling insulation.

(5) *R-Values* listed are for the labelled, declared *R-Value* of insulation.

Table 13.2.3f: Pitched roof with horizontal ceiling – minimum R-Value for ceiling insulation: climate zone 5

Roof ventilation	*Reflective insulation* under-roof	Under-roof insulation *R-Value*	SA ≤ 0.42	0.42 < SA ≤ 0.64
Vented	Yes	< 0.5	3.0	2.5
		≥ 0.5	2.5	
	No	< 2.0	3.0	
		≥ 2.0	2.5	

Roof ventilation	*Reflective insulation* under-roof	Under-roof insulation *R-Value*	SA ≤ 0.42	0.42 < SA ≤ 0.64
Standard	Yes	Any	2.5	
	No	≤ 0.5	3.0	
		> 0.5 to < 2.0	2.5	
		≥ 2.0	3.0	

Table Notes

(1) SA = solar absorptance.

(2) A roof is considered 'vented' if it—

(a) has one wind-driven roof ventilator per 50 m^2 of ceiling area, with gable, eave or ridge vents; or

(b) has one powered roof ventilator per 200 m^2 of ceiling area, with gable, eave or ridge vents; or

(c) is a tiled roof without *sarking-type material* at roof level.

(3) If a roof is not 'vented', it is a 'standard' roof.

(4) The *R-Value* of *reflective insulation* is not to be included in the *R-Value* of any under-roof or ceiling insulation.

(5) *R-Values* listed are for the labelled, declared *R-Value* of insulation.

Table 13.2.3g: Pitched roof with horizontal ceiling – minimum R-Value for ceiling insulation: climate zone 6

Roof ventilation	*Reflective insulation* under-roof	Under-roof insulation *R-Value*	0.23 ≤ SA ≤ 0.64	0.64 < SA ≤ 0.96
Vented	Yes	< 1.0	4.0	3.5
		≥ 1.0	3.5	
	No	< 1.0	4.0	
		≥ 1.0	3.5	
Standard	Yes	< 1.0	3.5	
		≥ 1.0	3.0	
	No	< 1.0	4.0	
		≥ 1.0	3.5	

Table Notes

(1) SA = solar absorptance.

(2) A roof is considered 'vented' if it—

(a) has one wind-driven roof ventilator per 50 m^2 of ceiling area, with gable, eave or ridge vents; or

(b) has one powered roof ventilator per 200 m^2 of ceiling area, with gable, eave or ridge vents; or

(c) is ventilated to *outdoor air* through evenly distributed openings with Table 10.8.3; or

(d) is a tiled roof without *sarking-type material* at roof level.

(3) If a roof is not 'vented', it is a 'standard' roof.

(4) In *climate zones* 6, 7 and 8, roof ventilation must comply with 10.8.3.

(5) The *R-Value* of *reflective insulation* is not to be included in the *R-Value* of any under-roof or ceiling insulation.

(6) *R-Values* listed are for the labelled, declared *R-Value* of insulation.

Table 13.2.3h: Pitched roof with horizontal ceiling – minimum R-Value for ceiling insulation: climate zone 7

Roof ventilation	*Reflective insulation* under-roof	Under-roof insulation *R-Value*	SA ≤ 0.23	0.23 < SA ≤ 0.32	0.32 < SA ≤ 0.42	0.42 < SA ≤ 0.53	0.53 < SA ≤ 0.64	0.64 < SA ≤ 0.73	0.73 < SA ≤ 0.85	0.85 < SA ≤ 0.96
Vented	Yes	< 1.0	4.5	4.5	4.5	4.5	4.5	4.0	4.0	4.0
		≥ 1.0	4.5	4.5	4.5	4.5	4.0	4.0	4.0	4.0
	No	< 1.0	5.0	4.5	4.5	4.5	4.0	4.0	3.5	3.5
		≥ 1.0 to < 1.5	4.5	4.5	4.5	4.5	4.0	4.0	4.0	4.0
		≥ 1.5	4.5	4.5	4.5	4.5	4.5	4.0	4.0	4.0
Standard	Yes	< 1.0	4.5	4.5	4.5	4.0	4.0	4.0	4.0	4.0
		≥ 1.0	4.0							
	No	< 1.0	5.0	4.5	4.5	4.0	4.0	3.5	3.5	3.5
		≥ 1.0 to < 1.5	4.5	4.5	4.0	4.0	4.0	4.0	3.5	3.5
		≥ 1.5 to < 2.0	4.0							
		≥ 2.0	4.5	4.0	4.0	4.0	4.0	4.0	4.0	3.5

Table Notes

(1) SA = solar absorptance.

(2) A roof is considered 'vented' if it—

(a) has one wind-driven roof ventilator per 50 m^2 of ceiling area, with gable, eave or ridge vents; or

(b) has one powered roof ventilator per 200 m^2 of ceiling area, with gable, eave or ridge vents; or

(c) is ventilated to *outdoor air* through evenly distributed openings in accordance with Table 10.8.3; or

(d) is a tiled roof without *sarking-type material* at roof level.

(3) If a roof is not 'vented', it is a 'standard' roof.

(4) The *R-Value* of *reflective insulation* is not to be included in the *R-Value* of any under-roof or ceiling insulation.

(5) *R-Values* listed are for the labelled, declared *R-Value* of insulation.

Table 13.2.3i: Pitched roof with horizontal ceiling – minimum R-Value for ceiling insulation: climate zone 8

Roof ventilation	*Reflective insulation* under-roof	Under-roof insulation *R-Value*	SA ≤ 0.23	0.23 < SA ≤ 0.32	0.32 < SA ≤ 0.42	0.42 < SA ≤ 0.53	0.53 < SA ≤ 0.64	0.64 < SA ≤ 0.73	0.73 < SA ≤ 0.85	0.85 < SA ≤ 0.96
Vented	Yes	< 1.5	4.5	4.5	4.0	4.0	4.0	4.0	4.0	4.0
		≥ 1.5 to < 2.0	4.5	4.5	4.5	4.5	4.0	4.0	4.0	4.0
		≥ 2.0	4.5	4.5	4.5	4.0	4.0	4.0	4.0	4.0
	No	< 1.0	4.5	4.5	4.5	4.0	4.0	3.5	3.5	3.0
		≥ 1.0 to < 1.5	4.5	4.5	4.0	4.0	4.0	4.0	4.0	4.0
		≥1.5	4.5	4.5	4.5	4.0	4.0	4.0	4.0	4.0

Roof ventilation	*Reflective insulation* under-roof	Under-roof insulation *R-Value*	SA ≤ 0.23	0.23 < SA ≤ 0.32	0.32 < SA ≤ 0.42	0.42 < SA ≤ 0.53	0.53 < SA ≤ 0.64	0.64 < SA ≤ 0.73	0.73 < SA ≤ 0.85	0.85 < SA ≤ 0.96
Standard	Yes	< 1.0	4.0	4.0	4.0	4.0	4.0	3.5	3.5	3.5
		≥ 1.0 to < 1.5	4.0	4.0	4.0	4.0	4.0	4.0	3.5	3.5
		≥ 1.5 to < 2.0	4.0	4.0	4.0	4.0	4.0	4.0	4.0	3.5
		≥ 2.0	4.0							
	No	< 1.0	4.5	4.0	4.0	3.5	3.5	3.0	3.0	3.0
		≥ 1.0 to < 1.5	4.0	4.0	4.0	4.0	3.5	3.5	3.5	3.5
		≥ 1.5 to < 2.0	4.0	4.0	4.0	4.0	4.0	3.5	3.5	3.5
		≥ 2.0	4.0	4.0	4.0	4.0	4.0	4.0	3.5	3.5

Table Notes

(1) SA = solar absorptance.

(2) A roof is considered 'vented' if it—

(a) has one wind-driven roof ventilator per 50 m^2 of ceiling area, with gable, eave or ridge vents; or

(b) has one powered roof ventilator per 200 m^2 of ceiling area, with gable, eave or ridge vents; or

(c) is ventilated to *outdoor air* through evenly distributed openings in accordance with Table 10.8.3; or

(d) is a tiled roof without *sarking-type material* at roof level.

(3) If a roof is not 'vented', it is a 'standard' roof.

(4) The *R-Value* of *reflective insulation* is not to be included in the *R-Value* of any under-roof or ceiling insulation.

(5) *R-Values* listed are for the labelled, declared *R-Value* of insulation.

Table 13.2.3j: Flat, skillion or cathedral roof – minimum R-Value for ceiling insulation: climate zone 1 – single storey dwelling

Reflective insulation under-roof	SA ≤ 0.23	0.23 < SA ≤ 0.32	0.32 < SA ≤ 0.42	0.42 < SA ≤ 0.53	0.53 < SA ≤ 0.64
Yes	1.0	2.0	2.0	4.0	4.0
No	1.0	3.5	X	X	X

Table Notes

(1) SA = solar absorptance.

(2) The *R-Value* can be achieved by installing insulation under the roof or on the top of the ceiling or a combination of both.

(3) The *R-Value* of *reflective insulation* is not to be included in the *R-Value* of any under-roof or ceiling insulation.

(4) *R-Values* listed are for the labelled, declared *R-Value* of insulation.

(5) X = not permitted.

Table 13.2.3k: Flat, skillion or cathedral roof – minimum R-Value for ceiling insulation: climate zone 1 – two (or more) storey dwelling

Reflective insulation under-roof	SA ≤ 0.23	0.23 < SA ≤ 0.32	0.32 < SA ≤ 0.42	0.42 < SA ≤ 0.53	0.53 < SA ≤ 0.64
Yes	1.5	1.5	2.0	3.0	4.0
No	1.5	3.5	5.0	X	X

Table Notes

(1) SA = solar absorptance.

(2) The *R-Value* can be achieved by installing insulation under the roof or on top of the ceiling or a combination of both.

(3) The *R-Value* of *reflective insulation* is not to be included in the *R-Value* of any under-roof or ceiling insulation.

(4) *R-Values* listed are for the labelled, declared *R-Value* of insulation.

(5) X = not permitted.

Table 13.2.3l: Flat, skillion or cathedral roof – minimum R-Value for ceiling insulation: climate zone 2

Reflective insulation under-roof	SA ≤ 0.23	0.23 < SA ≤ 0.32	0.32 < SA ≤ 0.42	0.42 < SA ≤ 0.53	0.53 < SA ≤ 0.64
Yes	2.5	2.5	2.5	2.5	2.5
No	3.0	3.0	3.5	4.0	4.0

Table Notes

(1) SA = solar absorptance.

(2) The *R-Value* can be achieved by installing insulation under the roof or on top of the ceiling or a combination of both.

(3) The *R-Value* of *reflective insulation* is not to be included in the *R-Value* of any under-roof or ceiling insulation.

(4) *R-Values* listed are for the labelled, declared *R-Value* of insulation.

Table 13.2.3m: Flat, skillion or cathedral roof – minimum R-Value for ceiling insulation: climate zone 3

Reflective insulation under-roof	SA ≤ 0.23	0.23 < SA ≤ 0.32	0.32 < SA ≤ 0.42	0.42 < SA ≤ 0.53	0.53 < SA ≤ 0.64
Yes	2.0	2.0	2.5	2.5	2.5
No	3.5	4.0	5.0	X	X

Table Notes

(1) SA = solar absorptance.

(2) The *R-Value* can be achieved by installing insulation under the roof or on top of the ceiling or a combination of both.

(3) The *R-Value* of *reflective insulation* is not to be included in the *R-Value* of any under-roof or ceiling insulation.

(4) *R-Values* listed are for the labelled, declared *R-Value* of insulation.

(5) X = not permitted.

Table 13.2.3n: Flat, skillion or cathedral roof – minimum R-Value for ceiling insulation: climate zone 4

Reflective insulation under-roof	SA ≤ 0.64
Yes	3.0

Reflective insulation under-roof	SA ≤ 0.64
No	3.5

Table Notes

(1) SA = solar absorptance.

(2) The *R-Value* can be achieved by installing insulation under the roof or on top of the ceiling or a combination of both.

(3) The *R-Value* of *reflective insulation* is not to be included in the *R-Value* of any under-roof or ceiling insulation.

(4) *R-Values* listed are for the labelled, declared *R-Value* of insulation.

Table 13.2.3o: Flat, skillion or cathedral roof – minimum R-Value for ceiling insulation: climate zone 5

Reflective insulation under-roof	SA ≤ 0.64
Yes	2.5
No	3.0

Table Notes

(1) SA = solar absorptance.

(2) The *R-Value* can be achieved by installing insulation under the roof or on top of the ceiling or a combination of both.

(3) The *R-Value* of *reflective insulation* is not to be included in the *R-Value* of any under-roof or ceiling insulation.

(4) *R-Values* listed are for the labelled, declared *R-Value* of insulation.

Table 13.2.3p: Flat, skillion or cathedral roof – minimum R-Value for ceiling insulation: climate zone 6

Reflective insulation under-roof	0.23 ≤ SA < 0.64	SA = 0.64	0.64 < SA ≤ 0.96
Yes	4.0	3.5	4.0
No	4.0	4.0	4.0

Table Notes

(1) SA = solar absorptance.

(2) The *R-Value* can be achieved by installing insulation under the roof or on top of the ceiling or a combination of both.

(3) The *R-Value* of *reflective insulation* is not to be included in the *R-Value* of any under-roof or ceiling insulation.

(4) *R-Values* listed are for the labelled, declared *R-Value* of insulation.

Table 13.2.3q: Flat, skillion or cathedral roof – minimum R-Value for ceiling insulation: climate zone 7

Reflective insulation under-roof	SA ≤ 0.23	0.23 < SA ≤ 0.32	0.32 < SA ≤ 0.42	0.42 < SA ≤ 0.53	0.53 < SA ≤ 0.64	0.64 < SA ≤ 0.73	0.73 < SA ≤ 0.85	0.85 < SA ≤ 0.96
Yes	4.5	4.5	4.5	4.0	4.0	4.0	4.0	4.0
No	5.0	4.5	4.5	4.0	4.0	3.5	3.5	3.5

Table Notes

(1) SA = solar absorptance.

(2) The *R-Value* can be achieved by installing insulation under the roof or on top of the ceiling or a combination of both.

(3) The *R-Value* of *reflective insulation* is not to be included in the *R-Value* of any under-roof or ceiling insulation.

(4) *R-Values* listed are for the labelled, declared *R-Value* of insulation.

Table 13.2.3r: Flat, skillion or cathedral roof – minimum R-Value for ceiling insulation: climate zone 8

Reflective insulation under-roof	SA ≤ 0.23	0.23 < SA ≤ 0.32	0.32 < SA ≤ 0.42	0.42 < SA ≤ 0.53	0.53 < SA ≤ 0.64	0.64 < SA ≤ 0.73	0.73 < SA ≤ 0.85	0.85 < SA ≤ 0.96
Yes	4.0	4.0	4.0	4.0	4.0	3.5	3.5	3.5
No	4.5	4.0	4.0	3.5	3.5	3.0	3.0	3.0

Table Notes

(1) SA = solar absorptance.

(2) The *R-Value* can be achieved by installing insulation under the roof or on top of the ceiling or a combination of both.

(3) The *R-Value* of *reflective insulation* is not to be included in the *R-Value* of any under-roof or ceiling insulation.

(4) *R-Values* listed are for the labelled, declared *R-Value* of insulation.

Table 13.2.3s: Metal-framed pitched roof with horizontal ceiling – minimum Total R-Value of ceiling to account for thermal bridging

Minimum ceiling insulation *R-Value* from Tables 13.2.3a to 13.2.3i as applicable	Minimum ceiling *Total R-Value*
1.5	1.38
2.0	1.74
2.5	2.09
3.0	2.43
3.5	2.63
4.0	2.95
4.5	3.27
5.0	3.59
5.5	3.91
6.0	4.23

Table Notes

(1) The *Total R-Value* calculation only includes the ceiling frame, insulation and ceiling lining. It is not to include internal air films, roof space or roof lining.

(2) Minimum ceiling *Total R-Values* are in-situ values. They account for compression of insulation.

Table 13.2.3t: Metal-framed flat, skillion or cathedral roof – minimum Total R-Value to account for thermal bridging

Minimum ceiling insulation *R-Value* from Tables 13.2.3j to 13.2.3r	Minimum *Total R-Value* to account for thermal bridging – heat flow down	Minimum *Total R-Value* to account for thermal bridging – heat flow up
1.0	1.40	1.32
1.5	1.86	1.78
2.0	2.29	2.21
2.5	2.71	2.63
3.0	3.11	3.02
3.5	3.31	3.22
4.0	3.66	3.57
4.5	3.98	3.90
5.0	4.32	4.22

Minimum ceiling insulation *R-Value* from Tables 13.2.3j to 13.2.3r	Minimum *Total R-Value* to account for thermal bridging – heat flow down	Minimum *Total R-Value* to account for thermal bridging – heat flow up
5.5	4.63	4.53
6.0	4.93	4.82

Table Notes

(1) Minimum *Total R-Values* are in-situ values. They account for compression of insulation.

(2) Direction of heat flow must be determined in accordance with Table 13.2.3v.

Table 13.2.3u: Metal-framed flat, skillion or cathedral roof – thermal bridging mitigation

Minimum ceiling insulation *R-Value* from Tables 13.2.3j to 13.2.3r	Option 1 – increase insulation between roof frame members to specified minimum *R-Value*	Option 2 – add a layer of continuous insulation with specified minimum *R-Value* above or below the roof frame members
1.0	1.5	0.13
1.5	2.5	0.30
2.0	3.5	0.30
2.5	5.0	0.40
3.0	6.0	0.60
3.5	X	0.60
4.0	X	0.60
4.5	X	0.60
5.0	X	0.60
5.5	X	0.60
6.0	X	0.60

Table Notes

(1) Minimum *R-Values* are in-situ values. They account for compression of insulation.

(2) X = not permitted.

Table 13.2.3v: Direction of heat flow

Climate zone	Direction of heat flow
1	Down
2 (altitude less than 300 m)	Down
2 (altitude 300 m or more)	Down and up
3	Down and up
4	Up
5	Up
6	Up
7	Up
8	Up

Table 13.2.3w: Adjusted minimum R-Value of ceiling insulation required to compensate for loss of ceiling insulation area

Percentage of ceiling area uninsulated	Minimum *R-Value* of ceiling insulation required to satisfy 13.2.3(1) and (3)									
	1.0	1.5	2.0	2.5	3.0	3.5	4.0	4.5	5.0	5.5
0.5 to less than 1.0%	1.0	1.6	2.2	2.8	3.4	4.0	4.7	5.4	6.2	6.9
1.0% to less than 1.5%	1.1	1.7	2.3	2.9	3.6	4.4	5.2	6.1	7.0	x
1.5% to less than 2.0%	1.1	1.7	2.4	3.1	3.9	4.8	5.8	6.8	x	x
2.0% to less than 2.5%	1.1	1.8	2.5	3.3	4.2	5.3	6.5	x	x	x
2.5% to less than 3.0%	1.2	1.9	2.6	3.6	4.6	5.9	x	x	x	x
3.0% to less than 4.0%	1.2	2.0	3.0	4.2	5.7	x	x	x	x	x
4.0% to less than 5.0%	1.3	2.2	3.4	5.0	x	x	x	x	x	x

Table Notes

(1) Interpolation is allowed for values between those shown.

(2) X = not permitted.

Table 13.2.3x: Total R-Value for roofs constructed with insulated sandwich panels

Climate zone	SA ≤ 0.23	0.23 < SA ≤ 0.32	0.32 < SA ≤ 0.42	0.42 < SA ≤ 0.53	0.53 < SA ≤ 0.64	0.64 < SA ≤ 0.73	0.73 < SA ≤ 0.85	0.85 < SA ≤ 0.96
1 (single storey dwelling)	1.40	3.31	X	X	X	X	X	X
1 (two or more storey dwelling)	1.86	3.31	4.32	X	X	X	X	X
2 (heat flow down)	3.11	3.11	3.31	3.66	3.66	X	X	X
2 (heat flow up)	3.02	3.02	3.22	3.57	3.57	X	X	X
3 (heat flow down)	3.31	3.66	4.32	X	X	X	X	X
3 (heat flow up)	3.22	3.57	4.22	X	X	X	X	X
4	3.22	3.22	3.22	3.22	3.22	X	X	X
5	3.02	3.02	3.02	3.02	3.02	X	X	X
6	3.57	3.57	3.57	3.57	3.57	3.57	3.57	3.57
7	4.22	3.90	3.90	3.57	3.57	3.22	3.22	3.22
8	3.90	3.57	3.57	3.22	3.22	3.02	3.02	3.02

Table Notes

(1) SA = solar absorptance.

(2) Direction of heat flow must be determined in accordance with Table 13.2.3v.

(3) X = not permitted.

Explanatory Information: Table 13.2.3w

- When considering the reduction of insulation because of exhaust fans, flues or recessed downlights, 0.5% of the ceiling area for a 200 m^2 house would permit 2 bathroom heater-light assemblies, a laundry exhaust fan, a kitchen exhaust fan and either approximately 20 recessed down-lights with 50 mm clearance to insulation, 10 recessed downlights with 100 mm clearance to insulation or only 3 recessed downlights with 200 mm clearance to insulation.
- Note that 13.2.3(5) does not require an increase in ceiling insulation for *roof lights*.
- Placing some of the *required* insulation at the roof level may result in a more practical outcome. Insulation at the roof level is effective in warm climates and significantly moderates the roof space extremes and *condensation* risk in cold climates. Note that Part 10.8 contains specific provisions for *condensation*.

Explanatory Information: Thermal bridging calculation methods

The effect of thermal bridging through repeating framing elements such as ceiling joists and the bottom chord of ceiling trusses must be considered when calculating the *Total R-Value* of metal-framed roofs. Other types of thermal bridges may be calculated if considered significant.

NSW 13.2.4

13.2.4 Roof lights

[2019: 3.12.1.3]

Roof lights (including any associated shaft and diffuser) serving a *habitable room* or an interconnecting space such as a corridor, hallway, stairway or the like must have—

(a) a total area of not more than 5% of the *floor area* of the room or space served; and

(b) transparent and translucent elements, including any imperforate ceiling diffuser, with a combined performance of—

(i) for *Total System SHGC*, in accordance with Table 13.2.4; and

(ii) for *Total System U-Value*, not more than U3.9.

Table 13.2.4: Roof lights – Total System SHGC

Roof light shaft index Note 1	Total area of roof lights up to 3.5% of the *floor area* of the room or space	Total area of roof lights more than 3.5% and up to 5% of the *floor area* of the room or space
< 1.0	≤ 0.45	≤ 0.29
≥ 1.0 to < 2.5	≤ 0.51	≤ 0.33
≥ 2.5	≤ 0.76	≤ 0.49

Table Notes

(1) The *roof light* shaft index is determined by measuring the distance from the centre of the shaft at the roof to the centre of the shaft at the ceiling level and dividing it by the average internal dimension of the shaft opening at the ceiling level (or the diameter for a circular shaft) in the same units of measurement.

(2) The area of a *roof light* is the area of the roof opening that allows light to enter the building. The total area of *roof lights* is the combined area for all *roof lights* serving the room or space.

Explanatory Information

The *Total System SHGC* and *Total System U-Values* are expressed as Australian Fenestration Rating Council (AFRC) values.

NSW 13.2.5

13.2.5 External walls

[2019: 3.12.1.4]

(1) Except for the *external wall* of a sub-floor space below a suspended floor and lightweight wall construction, wall insulation must have a minimum *R-Value*—

(a) in *climate zone* 1, in accordance with Table 13.2.5a; and

(b) in *climate zone* 2, in accordance with Tables 13.2.5c and 13.2.5d as applicable; and

(c) in *climate zone* 3, in accordance with Table 13.2.5e; and

(d) in *climate zone* 4, in accordance with Tables 13.2.5g and 13.2.5h as applicable; and

(e) in *climate zone* 5, in accordance with Tables 13.2.5i and 13.2.5j as applicable; and

(f) in *climate zone* 6, in accordance with Tables 13.2.5k and 13.2.5l as applicable; and

(g) In *climate zone* 7, in accordance with Tables 13.2.5m and 13.2.5n as applicable.

(2) For lightweight wall construction, wall insulation must have a minimum *R-Value*—

(a) in *climate zone* 1, in accordance with Table 13.2.5b; and

(b) in *climate zone* 2, in accordance with Table 13.2.5c, with R0.3 added; and

(c) in *climate zone* 3, in accordance with Table 13.2.5f; and

(d) in *climate zone* 4, in accordance with Table 13.2.5g, with R0.3 added; and

(e) in *climate zone* 5, in accordance with Table 13.2.5i, with R0.3 added; and

(f) in *climate zone* 6, in accordance with Table 13.2.5k, with R0.3 added; and

(g) in *climate zone* 7, in accordance with Table 13.2.5m, with R0.3 added; and

(h) in *climate zone* 8, in accordance with Table 13.2.5o.

(3) In *climate zones* 1 to 5, the solar absorptance of the outer surface of a wall used in (1) or (2) must be not more than 0.7.

(4) The thermal bridging in a metal-framed wall must be addressed by—

(a) achieving the *Total R-Value* in Tables 13.2.5p, 13.2.5q and 13.2.5r, calculated in accordance with AS/NZS 4859.2; or

(b) complying with one of the options in Tables 13.2.5s, 13.2.5t and 13.2.5u.

(5) A metal-framed wall that forms part of the building *envelope* must have a thermal break, consisting of a material with an *R-Value* of not less than R0.2, installed at all points of contact between the external cladding and the metal frame if the wall—

(a) does not have a wall lining or has a wall lining that is fixed directly to the metal frame; and

(b) is clad with weatherboards, fibre-cement or the like, or metal sheeting fixed to the metal frame.

(6) The requirements of (5) do not apply to walls constructed using insulated sandwich panels.

Table 13.2.5a: Concrete block walls – minimum insulation R-Value: climate zone 1

SA	Overhang (mm)	Wall height (m)			
		≤ 2.4	> 2.4 to ≤ 2.7	> 2.7 to ≤ 3.0	> 3.0 to ≤ 3.6
≤ 0.3	0	X	X	X	X
	> 0 to ≤ 300	Reflective	X	X	X
	> 300 to ≤ 450	0.0	Reflective	1.5	X
	> 450 to ≤ 600	0.0	Reflective	1.0	X
	> 600 to ≤ 900	0.0	0.0	Reflective	2.0
	> 900 to ≤ 1200	0.0	0.0	Reflective	1.0
	> 1200 to ≤ 1500	0.0	0.0	0.0	Reflective

SA	Overhang (mm)	Wall height (m)			
		≤ 2.4	> 2.4 to ≤ 2.7	> 2.7 to ≤ 3.0	> 3.0 to ≤ 3.6
	> 1500 to ≤ 1800	0.0	0.0	0.0	Reflective
	> 1800 to ≤ 2400	0.0	0.0	0.0	Reflective
> 0.3 to ≤ 0.4	0	X	X	X	X
	> 0 to ≤ 300	1.0	X	X	X
	> 300 to ≤ 450	1.0	1.0	X	X
	> 450 to ≤ 600	Reflective	Reflective	2.0	X
	> 600 to ≤ 900	0.0	Reflective	Reflective	X
	> 900 to ≤ 1200	0.0	0.0	Reflective	1.5
	> 1200 to ≤ 1500	0.0	0.0	Reflective	Reflective
	> 1500 to ≤ 1800	0.0	0.0	0.0	Reflective
	> 1800 to ≤ 2400	0.0	0.0	0.0	Reflective
> 0.4 to ≤ 0.5	0	X	X	X	X
	> 0 ≤ 300	1.0	X	X	X
	> 300 to ≤ 450	1.0	1.5	X	X
	> 450 to ≤ 600	Reflective	1.0	X	X
	> 600 to ≤ 900	0.0	Reflective	1.0	X
	> 900 to ≤ 1200	0.0	Reflective	Reflective	2.0
	> 1200 to ≤ 1500	0.0	0.0	Reflective	1.0
	> 1500 to ≤ 1800	0.0	0.0	Reflective	Reflective
	> 1800 to ≤ 2400	0.0	0.0	0.0	Reflective
> 0.5 to ≤ 0.6	0	X	X	X	X
	> 0 to ≤ 300	1.5	X	X	X
	> 300 to ≤ 450	1.0	X	X	X
	> 450 to ≤ 600	Reflective	1.5	X	X
	> 600 to ≤ 900	Reflective	Reflective	1.5	X
	> 900 to ≤ 1200	0.0	Reflective	Reflective	X
	> 1200 to ≤ 1500	0.0	Reflective	Reflective	1.5
	> 1500 to ≤ 1800	0.0	0.0	Reflective	1.0
	> 1800 to ≤ 2400	0.0	0.0	Reflective	Reflective
> 0.6 to ≤ 0.7	0	X	X	X	X
	> 0 to ≤ 300	X	X	X	X
	> 300 to ≤ 450	X	X	X	X
	> 450 to ≤ 600	Reflective	2.0	X	X
	> 600 to ≤ 900	Reflective	1.0	2.0	X
	> 900 to ≤ 1200	Reflective	Reflective	1.0	X
	> 1200 to ≤ 1500	0.0	Reflective	Reflective	2.0
	> 1500 to ≤ 1800	0.0	Reflective	Reflective	1.0
	> 1800 to ≤ 2400	0.0	0.0	Reflective	Reflective

Table Notes

(1) SA = solar absorptance.

(2) *R-Values* listed are for the labelled, declared *R-Value* of insulation.

(3) X = not permitted.

(4) Reflective = *reflective insulation* with an airspace with a minimum width of at least 20 mm. The surface emittance of the reflective surface facing the airspace must be a maximum of 0.1, where the airspace is exposed to the sun during construction to reduce glare (an outward facing surface), or 0.05 if not exposed to the sun (an inward facing surface).

(5) This table shows wall heights for single storey dwellings. For two storey (or more) dwellings with a wall height up to 2.4 m, add R0.5 to the *R-Values* given in this Table. For two storey (or more) dwellings with a wall height greater than 2.4 m, add R1.0.

Table 13.2.5b: Lightweight walls – minimum insulation R-Value: climate zone 1

SA	Overhang (mm)	Wall height (m)			
		≤ 2.4	> 2.4 to ≤ 2.7	> 2.7 to ≤ 3.0	> 3.0 to ≤ 3.6
≤ 0.3	0	X	X	X	X
	> 0 to ≤ 300	2.5	X	X	X
	> 300 to ≤ 450	1.0	X	X	X
	> 450 to ≤ 600	Reflective	2.0	X	X
	> 600 to ≤ 900	Reflective	1.0	2.0	X
	> 900 to ≤ 1200	Reflective	Reflective	1.0	X
	> 1200 to ≤ 1500	Reflective	Reflective	Reflective	2.5
	> 1500 to ≤ 1800	0.0	Reflective	Reflective	1.5
	> 1800 to ≤ 2400	0.0	0.0	Reflective	1.0
> 0.3 to ≤ 0.4	0	X	X	X	X
	> 0 to ≤ 300	X	X	X	X
	> 300 to ≤ 450	1.0	X	X	X
	> 450 to ≤ 600	Reflective	2.0	X	X
	> 600 to ≤ 900	Reflective	1.0	2.0	X
	> 900 to ≤ 1200	Reflective	Reflective	1.0	X
	>1200 to ≤ 1500	Reflective	Reflective	Reflective	2.5
	> 1500 to ≤ 1800	0.0	Reflective	Reflective	1.5
	> 1800 to ≤ 2400	0.0	0.0	Reflective	1.0
> 0.4 to ≤ 0.5	0	X	X	X	X
	> 0 to ≤ 300	X	X	X	X
	> 300 to ≤ 450	1.0	X	X	X
	> 450 to ≤ 600	Reflective	2.0	X	X
	> 600 to ≤ 900	Reflective	1.0	2.0	X
	> 900 to ≤ 1200	Reflective	Reflective	1.0	X
	> 1200 to ≤ 1500	Reflective	Reflective	Reflective	2.5
	> 1500 to ≤ 1800	0.0	Reflective	Reflective	1.5
	> 1800 to ≤ 2400	0.0	0.0	Reflective	1.0
> 0.5 to ≤ 0.6	0	X	X	X	X
	> 0 to ≤ 300	X	X	X	X
	> 300 to ≤ 450	1.0	X	X	X
	> 450 to ≤ 600	Reflective	2.0	X	X
	> 600 to ≤ 900	Reflective	1.0	2.0	X
	> 900 to ≤ 1200	Reflective	Reflective	1.0	X
	> 1200 to ≤ 1500	Reflective	Reflective	Reflective	2.5
	> 1500 to ≤ 1800	0.0	Reflective	Reflective	1.5

SA	Overhang (mm)	Wall height (m)			
		≤ 2.4	> 2.4 to ≤ 2.7	> 2.7 to ≤ 3.0	> 3.0 to ≤ 3.6
	> 1800 to ≤ 2400	0.0	0.0	Reflective	1.0
> 0.6 to ≤ 0.7	0	X	X	X	X
	> 0 to ≤ 300	X	X	X	X
	> 300 to ≤ 450	1.0	X	X	X
	> 450 to ≤ 600	Reflective	2.0	X	X
	> 600 to ≤ 900	Reflective	1.0	2.0	X
	> 900 to ≤ 1200	Reflective	Reflective	1.0	X
	> 1200 to ≤ 1500	Reflective	Reflective	Reflective	2.5
	> 1500 to ≤ 1800	0.0	Reflective	Reflective	1.5
	> 1800 to ≤ 2400	0.0	0.0	Reflective	1.0

Table Notes

(1) SA = solar absorptance.

(2) *R-Values* listed are for the labelled, declared *R-Value* of insulation.

(3) X = not permitted.

(4) Reflective = *reflective insulation* with an airspace with a minimum width of at least 20 mm. The surface emittance of the reflective surface facing the airspace must be a maximum of 0.1 where the airspace is exposed to the sun during construction to reduce glare (an outward facing surface), or 0.05 of not exposed to the sun (an inward facing surface).

(5) This Table shows wall heights for single storey dwellings. For two storey (or more) dwellings with a wall height up to 2.4 m, add R0.5 to *R-Values* from this Table. For two storey (or more) dwellings with a wall height greater than 2.4 m, add R1.0.

Table 13.2.5c: Masonry veneer wall – minimum insulation R-Value: climate zone 2

SA	Overhang (mm)	Wall height (m)			
		≤ 2.4	> 2.4 to ≤ 2.7	> 2.7 to ≤ 3.0	> 3.0 to ≤ 3.6
≤ 0.35	0	X	X	X	X
	> 0 to ≤ 300	2.0	X	X	X
	> 300 to ≤ 450	1.5	X	X	X
	> 450 to ≤ 600	1.5	2.0	X	X
	> 600 to ≤ 900	1.5	1.5	2.5	X
	> 900 to ≤ 1200	1.5	1.5	1.5	X
	> 1200 to ≤ 1500	1.5	1.5	1.5	2.5
	> 1500 to ≤ 1800	1.5	1.5	1.5	2.0
> 0.35 to ≤ 0.5	0	X	X	X	X
	> 0 to ≤ 300	2.0	X	X	X
	> 300 to ≤ 450	1.5	X	X	X
	> 450 to ≤ 600	1.5	2.5	X	X
	> 600 to ≤ 900	1.5	1.5	2.5	X
	> 900 to ≤ 1200	1.5	1.5	1.5	X
	> 1200 to ≤ 1500	1.5	1.5	1.5	2.5
	> 1500 to ≤ 1800	1.5	1.5	1.5	2.0

SA	Overhang (mm)	Wall height (m)			
		≤ 2.4	> 2.4 to ≤ 2.7	> 2.7 to ≤ 3.0	> 3.0 to ≤ 3.6
> 0.5 to ≤ 0.7	0	X	X	X	X
	> 0 to ≤ 300	2.0	X	X	X
	> 300 to ≤ 450	1.5	X	X	X
	> 450 to ≤ 600	1.5	2.0	X	X
	> 600 to ≤ 900	1.5	1.5	2.5	X
	> 900 to ≤ 1200	1.5	1.5	1.5	X
	> 1200 to ≤ 1500	1.5	1.5	1.5	X
	> 1500 to ≤ 1800	1.5	1.5	1.5	2.0

Table Notes

(1) SA = solar absorptance.

(2) *R-Values* listed are for the labelled, declared *R-Value* of insulation.

(3) X = not permitted.

(4) This Table shows wall heights for single storey dwellings. For two storey (or more) dwellings with a wall height of up to 2.4 m add R0.4 to the *R-Values* from this Table. For two storey (or more) dwellings with a wall height greater than 2.4 m, add R0.8.

Table 13.2.5d: Masonry cavity wall – minimum insulation R-Value: climate zone 2

SA	Overhang (mm)	Wall height (m)			
		≤ 2.4	> 2.4 to ≤ 2.7	> 2.7 to ≤ 3.0	> 3.0 to ≤ 3.6
≤ 0.35	0	0.25	0.25	0.25	0.51
	> 0 to ≤ 300	0.0	0.25	0.25	0.51
	> 300 to ≤ 450	0.0	0.0	0.25	0.51
	> 450 to ≤ 600	0.0	0.0	0.25	0.51
	> 600 to ≤ 900	0.0	0.0	0.25	0.25
	> 900 to ≤ 1200	0.0	0.25	0.25	0.25
	> 1200 to ≤ 1500	0.0	0.25	0.25	0.25
	> 1500 to ≤ 1800	0.0	0.25	0.25	0.25
> 0.35 to ≤ 0.5	0	0.25	0.25	0.25	0.51
	> 0 to ≤ 300	0.0	0.25	0.25	0.51
	> 300 to ≤ 450	0.0	0.0	0.25	0.51
	> 450 to ≤ 600	0.0	0.0	0.25	0.51
	> 600 to ≤ 900	0.0	0.0	0.25	0.25
	> 900 to ≤ 1200	0.0	0.0	0.0	0.25
	> 1200 to ≤ 1500	0.25	0.0	0.25	0.25
	> 1500 to ≤ 1800	0.25	0.25	0.25	0.25
> 0.5 to ≤ 0.7	0	0.25	0.25	0.51	0.51
	> 0 to ≤ 300	0.0	0.25	0.25	0.51
	> 300 to ≤ 450	0.0	0.0	0.25	0.51
	> 450 to ≤ 600	0.0	0.0	0.25	0.51
	> 600 to ≤ 900	0.0	0.0	0.25	0.25
	> 900 to ≤ 1200	0.0	0.0	0.0	0.25
	> 1200 to ≤ 1500	0.0	0.0	0.0	0.25

SA	Overhang (mm)	Wall height (m)			
		≤ 2.4	> 2.4 to ≤ 2.7	> 2.7 to ≤ 3.0	> 3.0 to ≤ 3.6
	> 1500 to ≤ 1800	0.0	0.0	0.25	0.25

Table Notes

(1) SA = solar absorptance.

(2) *R-Values* listed are for the labelled, declared *R-Value* of insulation.

(3) This Table shows wall heights for single storey dwellings. For two-storey (or more) dwellings, add R0.25 to the *R-Values* given in this Table.

Table 13.2.5e: Concrete block wall – minimum insulation R-Value: climate zone 3

SA	*R-Value*
≤ 0.7	1.5

Table Notes

(1) SA = solar absorptance.

(2) *R-Values* listed are for the labelled, declared *R-Value* of insulation.

Table 13.2.5f: Lightweight wall – minimum insulation R-Value: climate zone 3

SA	Overhang (mm)	Wall height (m)			
		≤ 2.4	> 2.4 to ≤ 2.7	> 2.7 to ≤ 3.0	> 3.0 to ≤ 3.6
≤ 0.3	0	X	X	X	X
	> 0 to ≤ 300	2.5	X	X	X
	> 300 to ≤ 450	1.5	X	X	X
	> 450 to ≤ 600	1.5	2.5	X	X
	> 600 to ≤ 900	1.5	1.5	2.5	X
	> 900 to ≤ 1200	1.5	1.5	1.5	X
	> 1200 to ≤ 1500	Reflective	1.5	1.5	2.5
	> 1500 to ≤ 1800	Reflective	1.5	1.5	2.0
	> 1800 to ≤ 2400	Reflective	Reflective	1.5	1.5
> 0.3 to ≤ 0.4	0	X	X	X	X
	> 0 to ≤ 300	2.5	X	X	X
	> 300 to ≤ 450	2.0	X	X	X
	> 450 to ≤ 600	1.5	2.5	X	X
	> 600 to ≤ 900	1.5	1.5	2.5	X
	> 900 to ≤ 1200	1.5	1.5	2.0	X
	> 1200 to ≤ 1500	Reflective	1.5	1.5	2.7
	> 1500 to ≤ 1800	Reflective	1.5	1.5	2.0
	> 1800 to ≤ 2400	Reflective	Reflective	1.5	1.5
> 0.4 to ≤ 0.5	0	X	X	X	X
	> 0 to ≤ 300	X	X	X	X
	> 300 to ≤ 450	2.0	X	X	X
	> 450 to ≤ 600	1.5	X	X	X
	> 600 to ≤ 900	1.5	2.0	2.7	X
	> 900 to ≤ 1200	1.5	1.5	2.0	X
	> 1200 to ≤ 1500	1.5	1.5	1.5	X

SA	Overhang (mm)	Wall height (m)			
		≤ 2.4	> 2.4 to ≤ 2.7	> 2.7 to ≤ 3.0	> 3.0 to ≤ 3.6
	> 1500 to ≤ 1800	Reflective	1.5	1.5	2.5
	> 1800 to ≤ 2400	Reflective	Reflective	1.5	1.5
> 0.5 to ≤ 0.6	0	X	X	X	X
	> to ≤ 300	X	X	X	x
	> 300 to ≤ 450	2.0	X	X	X
	> 450 to ≤ 600	1.5	X	X	X
	> 600 to ≤ 900	1.5	2.0	X	X
	> 900 to ≤ 1200	1.5	1.5	2.0	X
	> 1200 to ≤ 1500	1.5	1.5	1.5	X
	> 1500 to ≤ 1800	1.5	1.5	1.5	2.5
	> 1800 to ≤ 2400	Reflective	1.5	1.5	2.0
> 0.6 to ≤ 0.7	0	X	X	X	X
	> 0 to ≤ 300	X	X	X	X
	> 300 to ≤ 450	2.5	X	X	X
	> 450 to ≤ 600	2.0	X	X	X
	> 600 to ≤ 900	1.5	2.0	X	X
	> 900 to ≤ 1200	1.5	1.5	2.5	X
	> 1200 to ≤ 1500	1.5	1.5	2.0	X
	> 1500 to ≤ 1800	Reflective	1.5	1.5	2.7
	> 1800 to ≤ 2400	Reflective	1.5	1.5	2.0

Table Notes

(1) SA = solar absorptance.

(2) *R-Values* listed are for the labelled, declared *R-Value* for insulation.

(3) X = not permitted.

(4) Reflective = *reflective insulation* with an airspace with a minimum width of at least 20 mm. The surface emittance of the reflective surface facing the airspace must be a maximum 0.1, where the airspace is exposed to the sun during construction to reduce glare (an outward facing surface), or 0.05 if not exposed to the sun (an inward facing surface).

(5) This Table shows wall heights for single storey dwellings. For two storey (or more) dwellings with a wall height up to 2.4 m, add R1.0 to the *R-Values* given in this Table. For two storey (or more) dwellings with a wall height greater than 2.4 m, add R1.5.

Table 13.2.5g: Masonry veneer wall – minimum insulation R-Value: climate zone 4

SA	Overhang (mm)	Wall height (m)			
		≤ 2.4	> 2.4 to ≤ 2.7	> 2.7 to ≤ 3.0	> 3.0 to ≤ 3.6
≤ 0.35	0	2.0	2.5	2.5	X
	> 0 to ≤ 300	2.0	2.0	2.5	X
	> 300 to ≤ 450	2.0	2.0	2.5	3.0
	> 450 to ≤ 600	2.0	2.5	2.5	3.0
	> 600 to ≤ 900	2.5	2.5	2.5	3.0
	> 900 to ≤ 1200	X	3.0	3.0	3.0
	> 1200 to ≤ 1500	X	X	3.0	X

SA	Overhang (mm)	Wall height (m)			
		≤ 2.4	> 2.4 to ≤ 2.7	> 2.7 to ≤ 3.0	> 3.0 to ≤ 3.6
> 0.35 to ≤ 0.5	0	2.0	2.5	2.5	X
	> 0 to ≤ 300	2.0	2.0	2.5	X
	> 300 to ≤ 450	2.0	2.0	2.5	3.0
	> 450 to ≤ 600	2.0	2.0	2.5	3.0
	> 600 to ≤ 900	2.5	2.5	2.5	3.0
	> 900 to ≤ 1200	X	2.5	2.5	3.0
	> 1200 to ≤ 1500	X	X	3.0	3.0
> 0.5 to ≤ 0.7	0	2.0	2.5	2.5	X
	> 0 to ≤ 300	2.0	2.0	2.5	X
	> 300 to ≤ 450	2.0	2.0	2.5	3.0
	> 450 to ≤ 600	2.0	2.0	2.5	3.0
	> 600 to ≤ 900	2.0	2.0	2.5	3.0
	> 900 to ≤ 1200	3.0	2.5	2.5	3.0
	> 1200 to ≤ 1500	X	3.0	2.5	3.0

Table Notes

(1) SA = solar absorptance.

(2) *R-Values* listed are for the labelled, declared *R-Value* of insulation.

(3) X = not permitted.

(4) This Table shows wall heights for single storey dwellings. For two storey (or more) dwellings, add R0.5 to the *R-Values* given in this Table.

Table 13.2.5h: Masonry cavity wall – minimum insulation R-Value: climate zone 4

SA	Overhang (mm)	Wall height (m)			
		≤ 2.4	> 2.4 to ≤ 2.7	> 2.7 to ≤ 3.0	> 3.0 to ≤ 3.6
≤ 0.35	0	0.25	0.25	0.51	0.75
	> 0 to ≤ 300	0.51	0.51	0.51	0.75
	> 300 to ≤ 450	0.51	0.51	0,51	0.75
	> 450 to ≤ 600	0.51	0.51	0.51	0.75
	> 600 to ≤ 900	1.08	0.75	0.75	1.08
	> 900 to ≤ 1200	1.44	1.08	1.08	1.08
	> 1200 to ≤ 1500	X	1.44	1.44	1.08
	> 1500 to ≤ 1800	X	X	X	1.44
> 0.35 to ≤ 0.5	0	0.25	0.25	0.51	0.62
	> 0 to ≤ 300	0.25	0.25	0.51	0.62
	> 300 to ≤ 450	0.51	0.51	0.51	0.62
	> 450 to ≤ 600	0.51	0.51	0.51	0.75
	> 600 to ≤ 900	0.75	0.62	0.62	0.75
	> 900 to ≤ 1200	1.08	1.08	0.75	1.08
	> 1200 to ≤ 1500	X	1.44	1.08	1.08
	> 1500 to ≤ 1800	X	X	1.44	1.44

SA	Overhang (mm)	Wall height (m)			
		≤ 2.4	> 2.4 to ≤ 2.7	> 2.7 to ≤ 3.0	> 3.0 to ≤ 3.6
> 0.5 to ≤ 0.7	0	0.0	0.25	0.25	0.51
	> 0 to ≤ 300	0.25	0.25	0.25	0.51
	> 300 to ≤ 450	0.25	0.25	0.51	0.51
	> 450 to ≤ 600	0.25	0.25	0.51	0.51
	> 600 to ≤ 900	0.25	0.51	0.51	0.62
	> 900 to ≤ 1200	0.51	0.62	0.62	0.75
	> 1200 to ≤ 1500	1.08	1.08	1.08	1.08
	> 1500 to ≤ 1800	1.44	1.44	1.08	1.08

Table Notes

(1) SA = solar absorptance.

(2) *R-Values* listed are for the labelled, declared *R-Value* of insulation.

(3) X = not permitted.

(4) This Table shows wall heights for single storey dwellings. For two storey (or more) dwellings, add R0.25 to the *R-Values* given in this Table.

Table 13.2.5i: Masonry veneer wall – minimum insulation R-Value: climate zone 5

SA	Overhang (mm)	Wall height (m)			
		≤ 2.4	> 2.4 to ≤ 2.7	2.7 to ≤ 3.0	> 3.0 to ≤ 3.6
≤ 0.35	0	1.5	2.0	2.0	2.5
	> 0 to ≤ 300	1.5	2.0	2.0	2.5
	> 300 to ≤ 450	1.5	1.5	2.0	2.5
	> 450 to ≤ 600	1.5	2.0	2.0	2.5
	> 600 to ≤ 900	2.0	2.0	2.0	2.5
	> 900 to ≤ 1200	3.0	2.0	2.0	2.5
	> 1200 to ≤ 1500	X	3.0	2.5	2.5
> 0.35 to ≤ 0.5	0	1.5	2.0	2.0	2.5
	> 0 to ≤ 300	1.5	1.5	2.0	2.5
	> 300 to ≤ 450	1.5	1.5	2.0	2.5
	> 450 to ≤ 600	1.5	1.5	2.0	2.5
	> 600 to ≤ 900	2.0	2.0	2.0	2.5
	> 900 to ≤ 1200	2.5	2.0	2.0	2.5
	> 1200 to ≤ 1500	3.0	2.5	2.5	2.5
> 0.5 to ≤ 0.7	0	1.5	2.0	2.0	3.0
	> 0 to ≤ 300	1.5	2.0	2.0	3.0
	> 300 to ≤ 450	1.5	1.5	2.0	2.5
	> 450 to ≤ 600	1.5	2.0	2.0	2.5
	> 600 to ≤ 900	2.0	2.0	2.0	2.5
	> 900 to ≤ 1200	2.5	2.0	2.0	2.5
	> 1200 to ≤ 1500	X	3.0	2.5	2.5

Table Notes

(1) SA = solar absorptance.

(2) *R-Values* listed are for the labelled, declared *R-Value* of insulation.

(3) X = not permitted.

(4) This Table shows wall heights for single storey dwellings. For two storey (or more) dwellings, add R0.5 to the *R-Values* given in this Table.

Table 13.2.5j: Masonry cavity wall – minimum insulation R-Value: climate zone 5

SA	Overhang (mm)	Wall height (m)			
		≤ 2.4	> 2.4 to ≤ 2.7	> 2.7 to ≤ 3.0	> 3.0 to ≤ 3.6
≤ 0.35	0	0.0	0.0	0.25	0.25
	> 0 to ≤ 300	0.0	0.25	0.25	0.25
	> 300 to ≤ 450	0.25	0.25	0.25	0.25
	> 450 to ≤ 600	0.25	0.25	0.25	0.25
	> 600 to ≤ 900	0.25	0.25	0.25	0.51
	> 900 to ≤ 1200	0.51	0.51	0.51	0.51
	> 1200 to ≤ 1500	0.62	0.51	0.51	0.51
> 0.35 to ≤ 0.5	0	0.0	0.0	0.25	0.25
	> 0 to ≤ 300	0.0	0.0	0.25	0.25
	> 300 to ≤ 450	0.0	0.25	0.25	0.25
	> 450 to ≤ 600	0.25	0.25	0.25	0.25
	> 600 to ≤ 900	0.25	0.25	0.25	0.25
	> 900 to ≤ 1200	0.51	0.25	0.25	0.51
	> 1200 to ≤ 1500	0.62	0.51	0.51	0.51
> 0.5 to ≤ 0.7	0	0.0	0.0	0.0	0.25
	> 0 to ≤ 300	0.0	0.0	0.25	0.25
	> 300 to ≤ 450	0.0	0.0	0.25	0.25
	> 450 to ≤ 600	0.25	0.25	0.25	0.25
	> 600 to ≤ 900	0.25	0.25	0.25	0.25
	> 900 to ≤ 1200	0.51	0.25	0.25	0.25
	> 1200 to ≤ 1500	0.51	0.51	0.51	0.51

Table Notes

(1) SA = solar absorptance.

(2) *R-Values* listed are for the labelled, declared *R-Value* of insulation.

(3) This Table shows wall heights for single storey dwellings. For two (or more) storey dwellings, add R0.25 to the *R-Values* shown in this Table.

Table 13.2.5k: Masonry veneer wall – minimum insulation R-Value: climate zone 6

SA	Overhang (mm)	Wall height (m)			
		≤ 2.4	> 2.4 to ≤ 2.7	> 2.7 to ≤ 3.0	> 3.0 to ≤ 3.6
≤ 0.35	0	2.0	2.4	X	X
	> 0 to ≤ 300	2.4	2.4	X	X
	> 300 to ≤ 450	2.5	X	X	X
	> 450 to ≤ 600	X	X	X	X
	> 600 to ≤ 900	X	X	X	X
> 0.35 to ≤ 0.5	0	2.0	2.4	2.5	X
	> 0 to ≤ 300	2.4	2.5	X	X
	> 300 to ≤ 450	2.4	X	X	X

SA	Overhang (mm)	Wall height (m)			
		≤ 2.4	> 2.4 to ≤ 2.7	> 2.7 to ≤ 3.0	> 3.0 to ≤ 3.6
	> 450 to ≤ 600	X	X	X	X
	> 600 to ≤ 900	X	X	X	X
> 0.5 to ≤ 0.7	0	2.0	2.0	2.4	X
	> 0 to ≤ 300	2.0	2.4	2.5	X
	> 300 to ≤ 450	2.4	2.4	2.5	X
	> 450 to ≤ 600	2.5	2.5	X	X
	> 600 to ≤ 900	X	X	X	X
> 0.7 to ≤ 0.85	0	1.5	2.0	2.4	X
	> 0 to ≤ 300	2.0	2.0	2.4	X
	> 300 to ≤ 450	2.4	2.4	2.4	X
	> 450 to ≤ 600	2.4	2.4	2.4	X
	> 600 to ≤ 900	X	X	X	X

Table Notes

(1) SA = solar absorptance.

(2) *R-Values* listed are for the labelled, declared *R-Value* of insulation.

(3) X = not permitted.

(4) This Table shows wall heights for single storey dwellings. For two storey (or more) dwellings, add R0.5 to the *R-Values* given in this Table.

Table 13.2.5l: Masonry cavity wall – minimum insulation R-Value: climate zone 6

SA	Overhang (mm)	Wall height (m)			
		≤ 2.4	> 2.4 to ≤ 2.7	> 2.7 to ≤ 3.0	> 3.0 to ≤ 3.6
≤ 0.35	0	0.51	0.62	1.08	1.44
	> 0 to ≤ 300	1.08	1.08	1.08	1.44
	> 300 to ≤ 450	1.44	1.08	1.08	1.44
	> 450 to ≤ 600	1.44	1.44	1.08	1.44
	> 600 to ≤ 900	X	X	1.44	X
	> 900 to ≤ 1200	X	X	X	X
> 0.35 to ≤ 0.5	0	0.51	0.62	0.75	1.08
	> 0 to ≤ 300	0.75	0.75	1.08	1.44
	> 300 to ≤ 450	1.08	1.08	1.08	1.44
	> 450 to ≤ 600	1.44	1.08	1.08	1.44
	> 600 to ≤ 900	X	X	1.44	1.44
	> 900 to ≤ 1200	X	X	X	X
> 0.5 to ≤ 0.7	0	0.25	0.51	0.62	1.08
	> 0 to ≤ 300	0.62	0.62	0.75	1.08
	> 300 to ≤ 450	1.08	0.75	1.08	1.08
	> 450 to ≤ 600	1.44	1.08	1.08	1.08
	> 600 to ≤ 900	X	1.44	1.44	1.44
	> 900 to ≤ 1200	X	X	X	1.44
> 0.7 to ≤ 0.85	0	0.25	0.51	0.51	1.08
	> 0 to ≤ 300	0.62	0.51	0.75	1.08

SA	Overhang (mm)	Wall height (m)			
		≤ 2.4	> 2.4 to ≤ 2.7	> 2.7 to ≤ 3.0	> 3.0 to ≤ 3.6
	> 300 to ≤ 450	1.08	0.62	0.75	1.08
	> 450 to ≤ 600	1.08	1.08	1.08	1.08
	> 600 to ≤ 900	X	1.44	1.08	1.44
	> 900 to ≤ 1200	X	X	1.44	1.44

Table Notes

(1) SA = solar absorptance.

(2) *R-Values* listed are for the labelled, declared *R-Value* of insulation.

(3) X = not permitted.

(4) This Table shows wall heights for single storey dwellings. For two storey (or more) dwellings, add R0.25 to the *R-Values* given in this Table, to a maximum *R-Value* of R1.44.

Table 13.2.5m: Masonry veneer wall – minimum insulation R-Value: climate zone 7

SA	Overhang (mm)	Wall height (m)			
		≤ 2.4	> 2.4 to ≤ 2.7	> 2.7 to ≤ 3.0	> 3.0 to ≤ 3.6
≤ 0.35	0	1.5	1.5	1.5	2.4
	> 0 to ≤ 300	2.0	1.5	2.0	2.4
	> 300 to ≤ 450	2.4	2.0	2.0	2.4
	> 450 to ≤ 600	X	2.4	2.0	2.4
	> 600 to ≤ 900	X	X	X	X
	> 900 to ≤ 1200	X	X	X	X
> 0.35 to ≤ 0.5	0	1.5	1.5	1.5	2.0
	> 0 to ≤ 300	1.5	1.5	2.0	2.4
	> 300 to ≤ 450	2.4	2.0	2.0	2.4
	> 450 to ≤ 600	X	2.0	2.0	2.4
	> 600 to ≤ 900	X	X	2.5	2.4
	> 900 to ≤ 1200	X	X	X	X
> 0.5 to ≤ 0.7	0	1.5	1.5	1.5	2.0
	> 0 to ≤ 300	1.5	1.5	1.5	2.0
	> 300 to ≤ 450	2.0	1.5	1.5	2.0
	> 450 to ≤ 600	2.5	2.0	2.0	2.0
	> 600 to ≤ 900	X	X	2.4	2.4
	> 900 to ≤ 1200	X	X	X	X
> 0.7 to ≤ 0.85	0	1.5	1.5	1.5	1.5
	> 0 to ≤ 300	1.5	1.5	1.5	2.0
	> 300 to ≤ 450	2.0	1.5	1.5	2.0
	> 450 to ≤ 600	2.4	2.0	2.0	2.0
	> 600 to ≤ 900	X	X	2.4	2.0
	> 900 to ≤ 1200	X	X	X	2.4

Table Notes

(1) SA = solar absorptance.

(2) *R-Values* listed are for the labelled, declared *R-Value* of insulation.

(3) X = not permitted.

(4) This Table shows wall heights for single storey dwellings. For two storey (or more) dwellings, add R0.5 to the *R-Values* given in this Table.

Table 13.2.5n: Masonry cavity wall – minimum insulation R-Value: climate zone 7

SA	Overhang (mm)	Wall height (m)			
		≤ 2.4	> 2.4 to ≤ 2.7	> 2.7 to ≤ 3.0	> 3.0 to ≤ 3.6
≤ 0.35	0	1.08	1.44	X	X
> 0.35 to ≤ 0.5	0	1.08	1.44	X	X
> 0.5 to ≤ 0.7	0	0.75	1.44	1.44	X
	> 0 to ≤ 300	1.44	X	X	X
> 0.7 to ≤ 0.85	0	0.75	1.08	1.44	X
	> 0 to ≤ 300	1.44	1.44	X	X

Table Notes

(1) SA = solar absorptance.

(2) *R-Values* listed are for the labelled, declared *R-Value* of insulation.

(3) X = not permitted.

(4) This Table shows wall heights for single storey dwellings. For two storey (or more) dwellings, add R0.25 to the *R-Values* given in this Table.

Table 13.2.5o: Lightweight wall – minimum insulation R-Value: climate zone 8

SA	Overhang (mm)	Wall height (m)			
		≤ 2.4	> 2.4 to ≤ 2.7	> 2.7 to ≤ 3.0	> 3.0 to ≤ 3.6
≤ 0.35	0	1.5	2.0	2.0	X
	> 0 to ≤ 300	2.0	2.0	2.4	X
	> 300 to ≤ 450	X	2.4	2.4	X
	> 450 to ≤ 600	X	X	2.5	X
	> 600 to ≤ 900	X	X	X	X
	> 900 to ≤ 1200	X	X	X	X
> 0.35 to ≤ 0.5	0	1.5	1.5	2.0	2.4
	> 0 to ≤ 300	2.0	2.0	2.0	2.5
	> 300 to ≤ 450	2.5	2.0	2.4	2.5
	> 450 to ≤ 600	X	2.5	2.4	X
	> 600 to ≤ 900	X	X	X	X
	> 900 to ≤ 1200	X	X	X	X
> 0.5 to ≤ 0.7	0	1.5	1.5	2.0	2.7
	> 0 to ≤ 300	2.0	2.0	2.0	2.7
	> 300 to ≤ 450	2.7	2.0	2.0	2.7
	> 450 to ≤ 600	X	2.7	2.5	2.5
	> 600 to ≤ 900	X	X	X	X
	> 900 to ≤ 1200	X	X	X	X
> 0.7 to ≤ 0.85	0	1.5	1.5	1.5	2.0
	> 0 to ≤ 300	2.0	1.5	2.0	2.4
	> 300 to ≤ 450	2.4	2.0	2.0	2.4
	> 450 to ≤ 600	X	2.4	2.0	2.4
	> 600 to ≤ 900	X	X	X	X

SA	Overhang (mm)	Wall height (m)			
		≤ 2.4	> 2.4 to ≤ 2.7	> 2.7 to ≤ 3.0	> 3.0 to ≤ 3.6
	> 900 to ≤ 1200	X	X	X	X

Table Notes

(1) SA = solar absorptance.

(2) *R-Values* listed are for the labelled, declared *R-Value* of insulation.

(3) X = not permitted.

(4) This Table shows wall heights for single storey dwellings. For two storey (or more) dwellings with a wall height up to 2.4 m, add R0.5 to the *R-Values* given in this Table. For two storey (or more) dwellings with a wall height greater than 2.4 m, add R1.0. In both cases, the maximum insulation level must be not more than R2.7, or R3.1 if there is a reflective airspace.

Table 13.2.5p: Concrete block walls with internal lining fixed to a metal frame: minimum Total R-Value to account for thermal bridging

Wall insulation *R-Value* from Tables 13.2.5a and 13.2.5e	Minimum *Total R-Value* to account for thermal bridging
0.5	0.94
1.0	1.15
1.5	1.66
2.0	2.04
2.5	2.24
2.8	2.38
3.0	2.48

Table Notes

Minimum *Total R-Values* are in-situ values. They account for compression of insulation.

Table 13.2.5q: Lightweight metal-framed walls: minimum Total R-Value to account for thermal bridging

Wall insulation *R-Value required* in accordance with 13.2.5(2)	Minimum *Total R-Value* to account for thermal bridging
1.0	1.32
1.5	1.64
2.0	1.89
2.5	2.06
2.7	2.15
≥3.0	2.27

Table Notes

(1) Where the wall insulation *R-Value* from Tables 13.2.5b, 13.2.5c, 13.2.5d, 13.2.5e, 13.2.5f, 13.2.5g, 13.2.5h, 13.2.5i, 13.2.5j, 13.2.5k, 13.2.5l, 13.2.5m, 13.2.5n and 13.2.5o falls between the values shown in this Table, the *required Total R-Value* may be interpolated.

(2) Minimum *Total R-Values* are in-situ values. They account for compression of insulation.

Table 13.2.5r: Masonry veneer metal-framed walls: minimum Total R-Value to account for thermal bridging

Wall insulation from Tables 13.2.5c, 13.2.5g, 13.2.5i, 13.2.5k and 13.2.5m	Minimum *Total R-Value* to account for thermal bridging
1.5	1.79

Wall insulation from Tables 13.2.5c, 13.2.5g, 13.2.5i, 13.2.5k and 13.2.5m	Minimum *Total R-Value* to account for thermal bridging
2.0	2.08
2.5	2.34
2.7	2.44
≥3.0	2.57

Table Notes

Minimum *Total R-Values* are in-situ values. They account for compression of insulation.

Table 13.2.5s: Concrete block walls with internal lining fixed to a metal frame – thermal bridging mitigation

Wall insulation *R-Values* from Tables 13.2.5a to 13.2.5e	Option 1 – increase insulation between wall framing to specified minimum *R-Value*	Option 2 – add a layer of continuous insulation with specified minimum *R-Value* on the inside or outside of the wall framing
0 or reflective	Not required	Not required
0.5 or 1.0	1.5	0.13
1.5, 2.0 or 2.5	X	0.30

Table Notes

(1) X = not permitted.

(2) Minimum *R-Values* are in-situ values. They account for compression of insulation.

Table 13.2.5t: Lightweight metal-framed walls – thermal bridging mitigation

Wall insulation *R-Value* from Tables 13.2.5a to 13.2.5o	Thermal bridging mitigation
0 or reflective	Not required
>0 to ≤1.5	Either install *reflective insulation* outside the frame to create a minimum 20 mm reflective airspace between frame and cladding, or increase insulation between frames by R0.5.
>1.5	Either install *reflective insulation* outside the frame to create a minimum 20 mm reflective airspace between frame and cladding, or add a layer of continuous insulation with an *R-Value* of at least R0.30 on the inside or the outside of the frame.

Table Notes

(1) Minimum *R-Value*s are in-situ values. They account for compression of insulation.

(2) The surface emittance of a reflective surface facing an airspace must be a maximum of 0.1.

Table 13.2.5u: Masonry veneer metal-framed walls – thermal bridging mitigation

Wall insulation *R-Value* from Tables 13.2.5c, 13.2.5g, 13.2.5i, 13.2.5k and 13.2.5m	Thermal bridging mitigation options
> 0	Either install *reflective insulation* outside the frame to a minimum 20 mm reflective airspace between the frame and veneer, or add a layer of continuous insulation with an *R-Value* of at least R0.30 on the inside or the outside of the frame.

Table Notes

(1) Minimum *R-Values* are in-situ values. They account for compression of insulation.

(2) The surface emittance of a reflective surface facing an airspace must be a maximum of 0.1.

Explanatory Information

- A lightweight wall has no high thermal mass cladding on the outside or lining on the inside. Typically, this would represent a framed wall, clad externally with timber weatherboards, fibre-cement sheet, metal or autoclaved aerated concrete.
- Because of the high thermal conductance of metal, a thermal break is needed when a metal framing member directly connects the external cladding to the internal lining or the internal environment. For the purposes of 13.2.5(5)(b), expanded polystyrene strips greater than or equal to 12 mm thickness and timber greater than or equal to 20 mm thickness are deemed to achieve an *R-Value* greater than or equal to 0.2.
- Continuous insulation placed outside the *primary insulation layer*, including *reflective insulation*, may also be subject to *vapour permeance* requirements of 10.8.1(2). Many continuous insulation products and foils have a low vapour permeance. Some *reflective insulation* products have perforations to increase their *vapour permeance*. Many perforated *reflective insulation* products are not classified as a water barrier by AS 4200.1. Accordingly, these products are not suitable for use as a *water control layer*.
- Many *reflective insulation* products that use perforations to increase their *vapour permeance* are not suitable for use behind vertical or diagonally orientated timber cladding boards, where *required* by clause 7.5.2 of the ABCB Housing Provisions, or behind open jointed or unsealed cladding systems.

NSW 13.2.6

13.2.6 Floors and subfloor walls

[2019: 3.12.1.5]

(1) Floor insulation, where the floor is over an unenclosed space, must achieve the minimum *R-Value* in accordance with Table 13.2.6a.

(2) Floor and subfloor insulation, where the floor is over an enclosed subfloor space, must—

(a) in *climate zone* 1, be subfloor wall insulation with an *R-Value* of R1.5; and

(b) in *climate zone* 2, be subfloor wall insulation in accordance with Table 13.2.6b; and

(c) in *climate zone* 3, be subfloor wall insulation in accordance with Table 13.2.6c; and

(d) in *climate zone* 4, be in accordance with Table 13.2.6d; and

(e) in *climate zone* 5, be in accordance with Table 13.2.6e; and

(f) in *climate zone* 6, be in accordance with Table 13.2.6f; and

(g) in *climate zone* 7, be in accordance with Table 13.2.6g; and

(h) in *climate zone* 8, be in accordance with Table 13.2.6h.

(3) The thermal bridging in a metal-framed floor must be addressed by—

(a) achieving the *Total R-Value* in Table 13.2.6i, calculated by—

(i) using a method that accounts for the effect of thermal bridging in a suspended floor above an enclosed subfloor space; or

(ii) using AS/NZS 4859.2 for all other floors; or

(b) complying with one of the options in Table 13.2.6j.

(4) A concrete slab-on-ground with an in-slab or in-screed heating or cooling system, must have insulation with an *R-Value* greater than or equal to 1.0, installed around the vertical edge of its perimeter.

(5) Except for a waffle-pod slab—

(a) in *climate zones* 6 and 7—

(i) insulation with *R-Value* greater than or equal to 0.64 must be installed around the vertical edge of its perimeter; and

(ii) insulation with an *R-Value* greater than or equal to 0.64 must be installed underneath the slab; and

(b) in *climate zone* 8—

(i) insulation with an *R-Value* greater than or equal to 1.0 must be installed around the vertical edge of its perimeter; and

(ii) insulation with an *R-Value* greater than or equal to 2.0 must be installed underneath the slab.

(6) Insulation required by (4), (5)(a)(i) and (5)(b)(i) must—

(a) be *water resistant*; and

(b) be continuous from the adjacent finished ground level—

(i) to a depth of greater than or equal to 300 mm; or

(ii) for at least the full depth of the vertical edge of the concrete slab-on-ground (see Figure 13.2.6).

(7) The requirements of (4) do not apply to an in-screed heating or cooling system used solely in a bathroom, amenity area or the like.

Table 13.2.6a: Minimum R-Value of floor insulation where the floor is over an unenclosed space

Climate zone	*R-Value*
1	2.0
2	2.0
3	1.5
4	X
5	X
6	4.0, or 3.5 if used in conjunction with a reflective airspace
7	
8	

Table Notes

(1) *R-Values* listed are for the labelled, declared *R-Value* of insulation.

(2) X = not permitted.

Table 13.2.6b: Minimum R-Value of subfloor wall insulation where the floor is over an enclosed subfloor space: climate zone 2

Subfloor wall height (mm)	Minimum subfloor wall insulation *R-Value*
≤600	0.5
>600 to ≤900	1.0
>900 to ≤1200	1.5
>1200 to ≤1500	1.5
>1500 to ≤1800	1.5

Table Notes

(1) Under-floor insulation is not permitted in *climate zone* 2.

(2) *R-Values* listed are for the labelled, declared *R-Value* of insulation.

(3) Subfloor wall insulation must not obstruct ventilation openings in the subfloor walls.

Table 13.2.6c: Minimum R-Value of subfloor wall insulation where the floor is over an enclosed subfloor space: climate zone 3

Subfloor wall height (mm)	Minimum subfloor wall insulation *R-Value*
≤600	0.5

Subfloor wall height (mm)	Minimum subfloor wall insulation *R-Value*
>600 to ≤900	0.5
>900 to ≤1200	0.5
>1200 to ≤1500	0.5
>1500 to ≤1800	0.5

Table Notes

(1) Under-floor insulation is not permitted in *climate zone* 3.

(2) *R-Values* listed are for the labelled, declared *R-Value* of insulation.

(3) Subfloor wall insulation must not obstruct any ventilation openings in subfloor walls.

Table 13.2.6d: Minimum R-Value of floor and subfloor wall insulation where the floor is over an enclosed subfloor space: climate zone 4

Subfloor wall height (mm)	*Reflective insulation* facing down over the subfloor space	Minimum subfloor wall insulation *R-Value*	Minimum suspended floor insulation *R-Value*
≤600	No	0.5	1.0
≤600	No	1.0	0.5
≤600	Yes	0.0	1.5
≤600	Yes	0.5	1.0
≤600	Yes	2.0	0.5
>600 to ≤900	No	0.0	1.5
>600 to ≤900	No	1.5	0.5
>600 to ≤900	Yes	0.0	1.5
>600 to ≤900	Yes	0.5	1.0
>900 to ≤1200	No	0.0	1.5
>900 to ≤1200	No	0.5	1.0
>900 to ≤1200	Yes	0.5	1.0
>900 to ≤1200	Yes	2.0	0.5
>1200 to ≤1500	No	0.0	1.5
>1200 to ≤1500	Yes	0.0	1.5
>1200 to ≤1500	Yes	0.5	1.0
>1500 to ≤1800	No	0.5	1.5
>1500 to ≤1800	No	1.0	1.0
>1500 to ≤1800	Yes	0.0	2.0

Table Notes

(1) A suspended floor includes a suspended timber-framed floor, suspended metal-framed floor and suspended concrete floor.

(2) *R-Values* listed are for the labelled, declared *R-Value* of insulation.

Table 13.2.6e: Minimum R-Value of floor and subfloor wall insulation where the floor is over an enclosed subfloor area: climate zone 5

Subfloor wall height (mm)	*Reflective insulation* facing down over the subfloor surface	Minimum subfloor wall insulation *R-Value*	Minimum suspended floor insulation *R-Value*
≤600	No	0.0	1.5

Subfloor wall height (mm)	*Reflective insulation* facing down over the subfloor surface	Minimum subfloor wall insulation *R-Value*	Minimum suspended floor insulation *R-Value*
≤600	Yes	0.0	2.0
>600 to ≤900	No	0.0	1.5
>600 to ≤900	Yes	0.0	2.0
>900 to ≤1200	No	0.0	2.0
>900 to ≤1200	Yes	0.0	2.0
>1200 to ≤1500	No	0.0	2.0
>1200 to ≤1500	Yes	0.0	2.0
>1500 to ≤1800	No	0.0	2.5
>1500 to ≤1800	No	0.5	2.0
>1500 to ≤1800	Yes	0.0	2.5
>1500 to ≤1800	Yes	0.5	2.0

Table Notes

(1) A suspended floor includes a suspended timber-framed floor, a suspended metal-framed floor and a suspended concrete floor.

(2) *R-Values* listed are for the labelled, declared *R-Value* of insulation.

Table 13.2.6f: Minimum R-Value of floor and subfloor wall insulation where the floor is over an enclosed subfloor space: climate zone 6

Subfloor wall height (mm)	*Reflective insulation* facing down over the subfloor area	Minimum subfloor wall insulation *R-Value*	Minimum suspended floor insulation *R-Value*
≤600	No	0.0	2.0
≤600	Yes	0.0	1.5
>600 to ≤900	No	0.0	2.0
>600 to ≤900	Yes	0.0	1.5
>900 to ≤1200	No	0.0	2.0
>900 to ≤1200	Yes	0.0	1.5
>1200 to ≤1500	No	0.0	2.5
>1200 to ≤1500	No	0.5	2.0
>1200 to ≤1500	Yes	0.0	1.5
>1500 to ≤1800	No	0.0	2.5
>1500 to ≤1800	Yes	0.0	2.0
>1500 to ≤1800	Yes	0.5	1.5

Table Notes

(1) A suspended floor includes a suspended timber-framed floor, suspended metal-framed floor and suspended concrete floor.

(2) *R-Values* listed are for the labelled, declared *R-Value* of insulation.

Table 13.2.6g: Minimum R-Value of floor and subfloor insulation where the floor is over an enclosed subfloor space: climate zone 7

Subfloor wall height (mm)	*Reflective insulation* facing down over the subfloor space	Minimum subfloor wall insulation *R-Value*	Minimum suspended floor insulation *R-Value*
≤600	No	0.0	2.5

Subfloor wall height (mm)	*Reflective insulation* facing down over the subfloor space	Minimum subfloor wall insulation *R-Value*	Minimum suspended floor insulation *R-Value*
≤600	Yes	0.0	1.5
>600 to ≤900	No	0.0	2.5
>600 to ≤900	Yes	0.0	1.5
>900 to ≤1200	No	0.0	3.0
>900 to ≤1200	Yes	0.0	1.5
>1200 to ≤1500	No	0.0	3.0
>1200 to ≤1500	Yes	0.0	1.5
>1500 to ≤1800	No	0.0	3.0
>1500 to ≤1800	Yes	1.0	1.5
>1500 to ≤1800	Yes	0.0	2.0

Table Notes

(1) A suspended floor includes a suspended timber-framed floor, suspended metal-framed floor and suspended concrete floor.

(2) *R-Values* listed are for the labelled, declared *R-Value* of insulation.

Table 13.2.6h: Minimum R-Value of floor and subfloor wall insulation where the floor is over an enclosed subfloor space: climate zone 8

Subfloor wall height (mm)	*Reflective insulation* facing down over the subfloor space	Minimum subfloor wall insulation *R-Value*	Minimum suspended floor insulation *R-Value*
≤600	No	0.0	2.5
≤600	Yes	0.0	1.5
>600 to ≤900	No	0.0	2.5
>600 to ≤900	Yes	0.0	1.5
>900 to ≤1200	No	0.0	3.0
>900 to ≤1200	Yes	0.0	1.5
>1200 to ≤1500	No	0.0	3.0
>1200 to ≤1500	Yes	0.0	1.5
>1500 to ≤1800	No	0.0	3.0
>1500 to ≤1800	Yes	1.0	1.5
>1500 to ≤1800	Yes	0.0	2.0

Table Notes

(1) A suspended floor includes a suspended timber-framed floor, suspended metal-framed floor and suspended concrete floor.

(2) *R-Values* listed are for the labelled, declared *R-Value* of insulation.

Table 13.2.6i: Metal-framed suspended floor — minimum Total R-Value for floor to account for thermal bridging

Floor insulation from Tables 13.2.6a and 13.2.6d to 13.2.6h as applicable	Floor covering	Minimum *Total R-Value* of floor
0.0	Carpet	0.36
0.0	Other	0.22
0.5	Carpet	0.86

Floor insulation from Tables 13.2.6a and 13.2.6d to 13.2.6h as applicable	Floor covering	Minimum *Total R-Value* of floor
0.5	Other	0.71
1.0	Carpet	1.30
1.0	Other	1.15
1.5	Carpet	1.65
1.5	Other	1.50
2.0	Carpet	1.97
2.0	Other	1.83
2.5	Carpet	2.27
2.5	Other	2.11
3.0	Carpet	2.52
3.0	Other	2.37
3.5	Carpet	2.59
3.5	Other	2.47
4.0	Carpet	2.79
4.0	Other	2.65

Table Notes

(1) The *Total R-Value* can be adjusted using area weightings where there is a combination of floor coverings. Invert the *Total R-Value* for each floor type before applying area weightings.

(2) The *Total R-Value* for the floor plane only includes the floor frame, insulation, flooring and floor coverings. It does not include the internal air film, subfloor airspace, subfloor walls or external air film.

(3) Minimum *Total R-Values* are in-situ values. They account for compression of insulation.

(4) Direction of heat flow must be determined in accordance with Table 13.2.6k.

Table 13.2.6j: Metal-framed suspended floor — thermal bridging mitigation

Floor insulation from Tables 13.2.6a and 13.2.6d to 13.2.6h as applicable	Option 1 – increase insulation between floor framing to specified minimum *R-Value*	Option 2– add a layer of continuous insulation product above or below the floor framing with specified *R-Value*
0.5	1.0	0.13
1.0	1.5	0.30
1.5	2.5	0.40
2.0	3.0	0.40
2.5	4.0	0.40
≥ 3.0	X	0.60

Table Notes

(1) X = not permitted.

(2) Minimum *R-Values* are in-situ values. They account for compression of insulation.

Table 13.2.6k: Floor — direction of heat flow

Climate zone	Direction of heat flow
1	Up
2	Up
3	Up
4	Down

Climate zone	Direction of heat flow
5	Down
6	Down
7	Down
8	Down

Figure 13.2.6: Insulation of slab edge

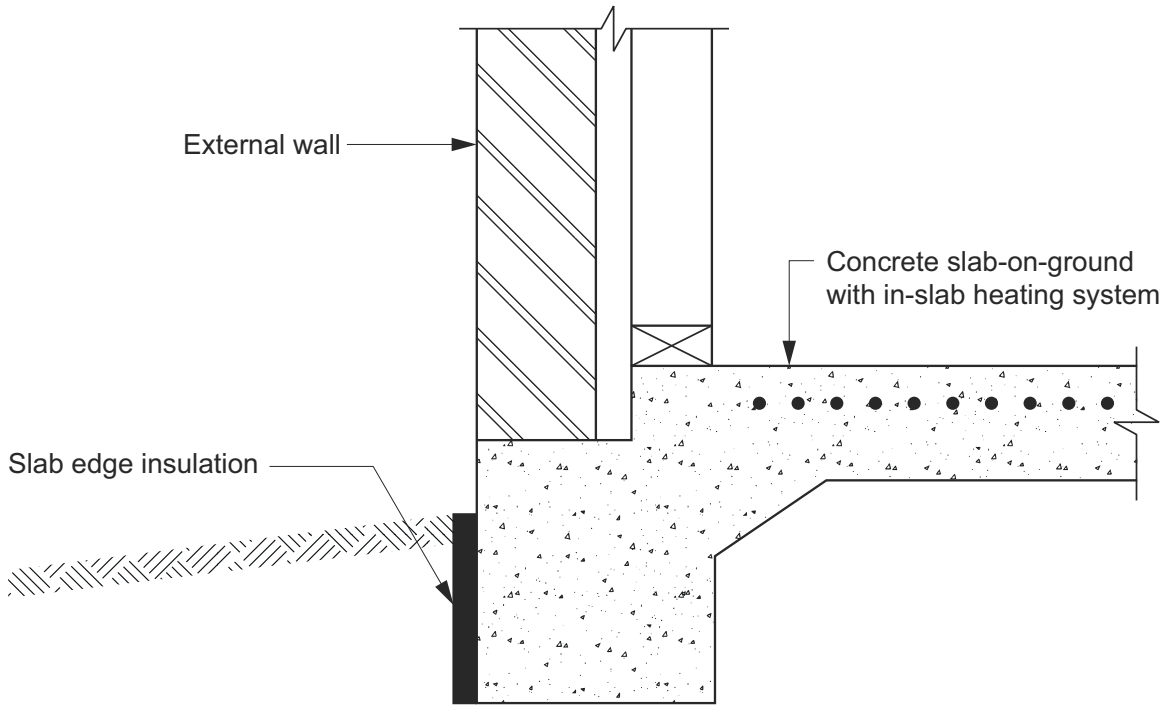

Explanatory Information

- For 13.2.6(3) the effect of thermal bridging through repeating framing elements must be considered when calculating the *Total R-Value* of metal-framed floors. Other types of thermal bridges may be calculated if considered significant.
- 13.2.6(7) provides an exemption for an in-screed heating or cooling system used solely in bathrooms, amenity areas and the like, as these are typically small areas.
- Care should be taken to ensure that the type of termite management system selected is compatible with the slab edge insulation.

NSW 13.2.7

13.2.7 Attached Class 10a buildings

[2019: 3.12.1.6]

A Class 10a building attached to a Class 1 building must—

(a) have an external fabric that achieves the *required* level of thermal performance for a Class 1 building; or

(b) be separated from the Class 1 building with construction having the *required* level of thermal performance for the Class 1 building.

Explanatory Information

The attachment of a Class 10a building, such as a garage, glasshouse, solarium, pool enclosure or the like should not compromise the thermal performance of the Class 1 building. In addition, the Class 10a building may be insulated and so assist the Class 1 building achieve the *required* thermal performance.

Explanatory Figure 13.2.7 below depicts examples of a Class 1 building with an attached Class 10a garage.

Figure 13.2.7 (explanatory): Attached Class 10a building examples

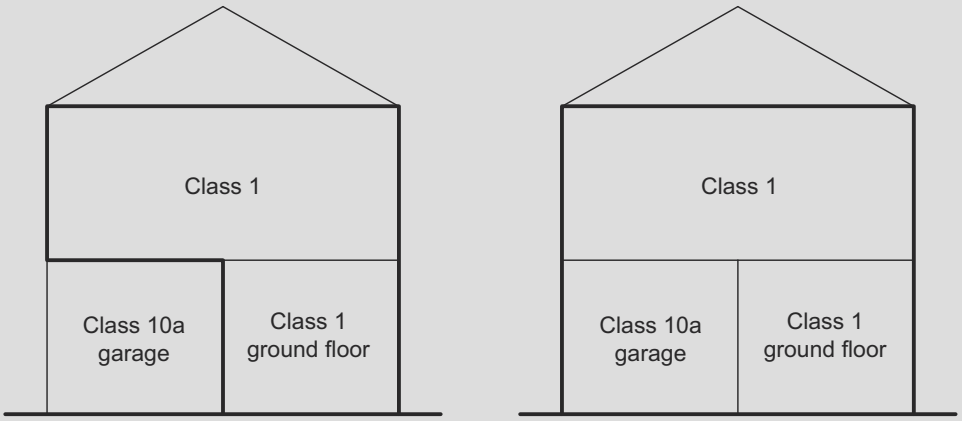

OPTION (a) – Elevation **OPTION (b) – Elevation**

Figure Notes

In (a), the thermal performance *required* for the Class 1 building may be achieved by including the walls and floor of the Class 1 building that adjoin the Class 10a garage.

In (b), the thermal performance *required* for the Class 1 building may be achieved by including the outside walls and floor of the Class 10a garage.

Part 13.3 External glazing

NSW Part 13.3
NT Part 13.3
TAS Part 13.3

13.3.1 Application of Part 13.3

[2019: 3.12.2]

(1) This Part applies to—

(a) a Class 1 building; and

(b) a Class 10a building with a *conditioned space*.

(2) Part 13.3 must be applied as directed in H6D2(1)(b).

13.3.2 External glazing — winter

[2019: 3.12.2.1]

(1) In *climate zones* 2 to 8, the ratio of the conductance (C_u) and solar heat gain (C_{SHGC}) of the *glazing* in each *storey*, including any *mezzanine*, must—

(a) not exceed the allowances obtained from Table 13.3.2a; and

(b) be calculated in accordance with the following formula:

$$\frac{[(A_1 \times U_1 \times BC_1 \times OC_1 \times R_{W1}) + (A_2 \times U_2 \times BC_2 \times OC_2 \times R_{W2}) + \ldots]}{[(A_1 \times SHGC_1 \times E_{W1} \times R_{W1} \times BS_{W1} \times L_{W1} \times F_{W1} \times H_{W1}) + (A_2 \times SHGC_2 \times E_{W_2} \times R_{W2} \times BS_{W2} \times L_{W2} \times F_{W2} \times H_{W2}) + \ldots]}$$

(2) In the formula at (1)(b)—

(a) $A_{1,2,etc}$ = the area of each *glazing* element; and

(b) $U_{1,2,etc}$ = the *Total System U-Value* of each *glazing* element; and

(c) $SHGC_{1,2,etc}$ = the *Total System SHGC* for each *glazing* element, not exceeding 0.7; and

(d) $E_{W1,W2,etc}$ = the winter exposure factor for each *glazing* element obtained from Table 13.3.2b, 13.3.2c, 13.3.2d, 13.3.2e, 13.3.2f, 13.3.2g, 13.3.2h, 13.3.2i, 13.3.2j, 13.3.2k, 13.3.2l, 13.3.2m, 13.3.2n, 13.3.2o, 13.3.2p or 13.3.2q; and

(e) $BC_{1,2,etc}$ = the bedroom conductance factor obtained from Table 13.3.2r; and

(f) $OC_{1,2,etc}$ = the orientation sector conductance factor obtained from Table 13.3.2s, 13.3.2t, 13.3.2u, 13.3.2v, 13.3.2w, 13.3.2x or 13.3.2y; and

(g) $R_{W1,W2,etc}$ = the room type factor in Table 13.3.2z, 13.3.2aa, 13.3.2ab, 13.3.2ac, 13.3.2ad, 13.3.2ae, 13.3.2af or 13.3.2ag; and

(h) $BS_{W1,W2,etc}$ = the bedroom solar heat gain factor in Table 13.3.2z, 13.3.2aa, 13.3.2ab, 13.3.2ac, 13.3.2ad, 13.3.2ae, 13.3.2af or 13.3.2ag; and

(i) $L_{W1,W2,etc}$ = the factor in Table 13.3.2z, 13.3.2aa, 13.3.2ab, 13.3.2ac, 13.3.2ad, 13.3.2ae, 13.3.2af or 13.3.2ag for each *glazing* element located on a floor level above the lowest floor level; and

(j) $F_{W1,W2,etc}$ = the frame factor in Table 13.3.2z, 13.3.2aa, 13.3.2ab, 13.3.2ac, 13.3.2ad, 13.3.2ae, 13.3.2af or 13.3.2ag for each *glazing* element; and

(k) $H_{W1,W2,etc}$ = the floor factor in Table 13.3.2z, 13.3.2aa, 13.3.2ab, 13.3.2ac, 13.3.2ad, 13.3.2ae, 13.3.2af or 13.3.2ag for each *glazing* element.

(3) For the purposes of this clause—

(a) orientation sectors must be determined in accordance with Figure 13.3.2a; and

(b) P/H must be determined in accordance with Figure 13.3.2b.

Table 13.3.2a: Maximum conductance to solar heat gain ratio (C_U/C_{SHGC})

Climate zone	Floor in direct contact with the ground	Suspended floor
2	9.60	9.37
3	19.10	14.75
4	10.25	8.04
5 (lightweight wall)	8.89	8.32
5 (concrete or masonry wall)	8.79	10.12
6	8.45	6.06
7	7.02	7.96
8	4.93	9.41

Table 13.3.2b: Orientation sector winter exposure factor (E_W) — floor in direct contact with the ground: climate zone 2

P/H	North	North east	East	South east	South	South west	West	North west
0.00	1.49	1.48	1.08	0.47	0.41	0.46	1.05	1.44
0.05	1.44	1.40	1.00	0.40	0.34	0.41	0.97	1.38
0.10	1.38	1.36	0.95	0.38	0.32	0.38	0.93	1.31
0.20	1.21	1.21	0.85	0.34	0.30	0.34	0.84	1.17
0.40	1.00	0.97	0.68	0.28	0.25	0.28	0.70	0.97
0.60	0.83	0.80	0.60	0.25	0.22	0.25	0.59	0.81
0.80	0.62	0.64	0.49	0.21	0.21	0.23	0.51	0.66
1.00	0.43	0.54	0.40	0.20	0.20	0.19	0.43	0.55
1.20	0.26	0.43	0.35	0.18	0.19	0.18	0.40	0.45
1.40	0.22	0.37	0.29	0.16	0.18	0.17	0.36	0.37
1.60	0.18	0.30	0.28	0.16	0.17	0.16	0.30	0.33
1.80	0.15	0.26	0.24	0.15	0.15	0.15	0.26	0.27
2.00	0.12	0.19	0.21	0.14	0.15	0.15	0.25	0.26

Table Notes

For P/H between those shown in this Table, either use the next highest P/H or interpolate.

Table 13.3.2c: Orientation sector winter exposure factor (E_W) — suspended floor: climate zone 2

P/H	North	North east	East	South east	South	South west	West	North west
0.00	1.67	1.36	1.20	0.52	0.19	0.85	1.18	1.51
0.05	1.62	1.29	1.12	0.45	0.16	0.75	1.09	1.45
0.10	1.56	1.26	1.06	0.42	0.15	0.71	1.05	1.37
0.20	1.36	1.11	0.95	0.38	0.14	0.62	0.95	1.22
0.40	1.13	0.90	0.76	0.31	0.12	0.52	0.79	1.01
0.60	0.94	0.74	0.67	0.28	0.10	0.46	0.66	0.85

P/H	North	North east	East	South east	South	South west	West	North west
0.80	0.70	0.59	0.55	0.24	0.10	0.41	0.57	0.69
1.00	0.49	0.50	0.45	0.22	0.09	0.35	0.48	0.57
1.20	0.30	0.40	0.39	0.20	0.09	0.33	0.46	0.47
1.40	0.25	0.34	0.32	0.18	0.08	0.31	0.40	0.39
1.60	0.20	0.27	0.31	0.18	0.08	0.29	0.34	0.35
1.80	0.17	0.24	0.27	0.17	0.07	0.27	0.30	0.29
2.00	0.14	0.18	0.24	0.16	0.07	0.27	0.29	0.28

Table Notes

For P/H between those shown in this Table, either use the next highest P/H or interpolate.

Table 13.3.2d: Orientation sector winter exposure factor (E_W) — floor in direct contact with the ground: climate zone 3

P/H	North	North east	East	South east	South	South west	West	North west
0.00	1.36	1.16	0.75	0.38	0.38	0.43	1.05	1.41
0.05	1.35	1.12	0.70	0.33	0.33	0.38	1.00	1.38
0.10	1.25	1.07	0.66	0.32	0.32	0.37	0.96	1.30
0.20	1.11	0.95	0.60	0.28	0.30	0.33	0.86	1.18
0.40	0.89	0.78	0.51	0.24	0.27	0.27	0.74	0.98
0.60	0.67	0.60	0.41	0.21	0.26	0.23	0.59	0.79
0.80	0.45	0.48	0.37	0.19	0.23	0.22	0.51	0.63
1.00	0.30	0.41	0.30	0.17	0.21	0.21	0.45	0.51
1.20	0.21	0.31	0.26	0.15	0.21	0.18	0.37	0.43
1.40	0.16	0.28	0.21	0.14	0.20	0.17	0.33	0.37
1.60	0.12	0.24	0.20	0.13	0.18	0.16	0.32	0.31
1.80	0.11	0.17	0.16	0.13	0.18	0.14	0.26	0.28
2.00	0.09	0.17	0.15	0.12	0.18	0.14	0.24	0.24

Table Notes

For P/H between those shown in this Table, either use the next highest P/H or interpolate.

Table 13.3.2e: Orientation sector winter exposure factor (E_W) — suspended floor: climate zone 3

P/H	North	North east	East	South east	South	South west	West	North west
0.00	1.92	1.29	0.97	0.82	0.75	1.07	1.24	1.69
0.05	1.90	1.24	0.90	0.72	0.66	0.94	1.18	1.65
0.10	1.76	1.18	0.86	0.69	0.63	0.91	1.13	1.56
0.20	1.57	1.05	0.77	0.62	0.60	0.81	1.01	1.41
0.40	1.25	0.86	0.66	0.51	0.54	0.68	0.87	1.17
0.60	0.94	0.66	0.53	0.46	0.51	0.59	0.70	0.94
0.80	0.63	0.53	0.47	0.41	0.45	0.55	0.60	0.76
1.00	0.42	0.45	0.39	0.36	0.42	0.52	0.53	0.61
1.20	0.29	0.35	0.34	0.33	0.42	0.46	0.44	0.52
1.40	0.23	0.31	0.28	0.31	0.39	0.42	0.39	0.44
1.60	0.17	0.27	0.26	0.28	0.36	0.39	0.38	0.37
1.80	0.15	0.19	0.21	0.28	0.36	0.36	0.31	0.34

P/H	North	North east	East	South east	South	South west	West	North west
2.00	0.13	0.19	0.20	0.26	0.36	0.36	0.29	0.29

Table Notes

For P/H between those shown in this Table, either use the next highest P/H or interpolate.

Table 13.3.2f: Orientation sector winter exposure factor (E_W) — floor in direct contact with the ground: climate zone 4

P/H	North	North east	East	South east	South	South west	West	North west
0.00	1.48	1.40	0.91	0.47	0.46	0.51	1.11	1.57
0.05	1.45	1.34	0.84	0.40	0.38	0.43	1.03	1.51
0.10	1.43	1.30	0.81	0.37	0.36	0.40	0.98	1.46
0.20	1.22	1.18	0.74	0.34	0.33	0.36	0.88	1.31
0.40	1.11	1.01	0.62	0.29	0.29	0.31	0.75	1.13
0.60	0.92	0.83	0.54	0.25	0.25	0.27	0.64	0.92
0.80	0.80	0.68	0.47	0.23	0.23	0.25	0.57	0.77
1.00	0.64	0.61	0.41	0.20	0.21	0.22	0.48	0.66
1.20	0.46	0.47	0.36	0.18	0.21	0.21	0.44	0.57
1.40	0.35	0,43	0.33	0.17	0.20	0.20	0.39	0.48
1.60	0.26	0.38	0.31	0.17	0.18	0.18	0.34	0.42
1.80	0.20	0.32	0.28	0.16	0.18	0.17	0.31	0.36
2.00	0.18	0.30	0.24	0.14	0.17	0.16	0.29	0.30

Table Notes

For P/H between those shown in this Table, either use the next highest P/H or interpolate.

Table 13.3.2g: Orientation sector winter exposure factor (E_W) — suspended floor: climate zone 4

P/H	North	North east	East	South east	South	South west	West	North west
0.00	1.38	1.12	1.00	0.71	0.56	0.87	1.02	1.26
0.05	1.35	1.08	0.91	0.60	0.46	0.73	0.95	1.21
0.10	1.34	1.04	0.89	0.56	0.45	0.69	0.90	1.17
0.20	1.13	0.95	0.80	0.51	0.40	0.62	0.82	1.05
0.40	1.04	0.81	0.67	0.43	0.35	0.53	0.70	0.91
0.60	0.85	0.67	0.59	0.38	0.30	0.47	0.59	0.74
0.80	0.74	0.55	0.52	0.34	0.29	0.42	0.53	0.62
1.00	0.60	0.49	0.44	0.31	0.26	0.38	0.44	0.53
1.20	0.43	0.38	0.40	0.27	0.26	0.36	0.41	0.46
1.40	0.33	0.35	0.36	0.25	0.24	0.33	0.36	0.39
1.60	0.24	0.31	0.34	0.25	0.22	0.31	0.31	0.34
1.80	0.18	0.26	0.30	0.24	0.22	0.29	0.29	0.29
2.00	0.17	0.24	0.26	0.22	0.21	0.27	0.26	0.24

Table Notes

For P/H between those shown in this Table, either use the next highest P/H or interpolate.

Table 13.3.2h: Orientation sector winter exposure factor (E_W) — floor in direct contact with the ground: climate zone 5 (lightweight wall)

P/H	North	North east	East	South east	South	South west	West	North west
0.00	1.61	1.55	1.00	0.49	0.44	0.47	1.02	1.58
0.05	1.56	1.49	0.91	0.41	0.37	0.40	0.94	1.51
0.10	1.56	1.43	0.86	0.39	0.36	0.38	0.90	1.47
0.20	1.30	1.27	0.77	0.35	0.32	0.34	0.80	1.32
0.40	1.19	1.05	0.64	0.30	0.28	0.29	0.66	1.10
0.60	0.97	0.87	0.52	0.26	0.25	0.25	0.56	0.90
0.80	0.78	0.71	0.46	0.24	0.23	0.23	0.50	0.73
1.00	0.64	0.55	0.36	0.21	0.22	0.20	0.43	0.63
1.20	0.43	0.48	0.33	0.20	0.20	0.19	0.35	0.50
1.40	0.32	0.36	0.27	0.19	0.19	0.18	0.34	0.43
1.60	0.22	0.32	0.25	0.18	0.17	0.16	0.28	0.36
1.80	0.18	0.26	0.21	0.16	0.17	0.16	0.24	0.32
2.00	0.14	0.20	0.20	0.15	0.17	0.14	0.23	0.24

Table Notes

For P/H between those shown in this Table, either use the next highest P/H or interpolate.

Table 13.3.2i: Orientation sector winter exposure factor (E_W) — floor in direct contact with the ground: climate zone 5 (concrete or masonry wall)

P/H	North	North east	East	South east	South	South west	West	North west
0.00	1.61	1.55	1.00	0.43	0.33	0.43	1.11	1.66
0.05	1.56	1.49	0.91	0.36	0.28	0.36	1.01	1.59
0.10	1.56	1.43	0.86	0.34	0.27	0.35	0.98	1.54
0.20	1.30	1.27	0.77	0.31	0.24	0.31	0.87	1.39
0.40	1.19	1.05	0.64	0.26	0.21	0.26	0.72	1.16
0.60	0.97	0.87	0.52	0.23	0.19	0.23	0.61	0.95
0.80	0.78	0.71	0.46	0.21	0.17	0.21	0.55	0.77
1.00	0.64	0.55	0.36	0.19	0.16	0.19	0.47	0.66
1.20	0.43	0.48	0.33	0.18	0.15	0.18	0.38	0.53
1.40	0.32	0.36	0.27	0.17	0.14	0.17	0.36	0.45
1.60	0.22	0.32	0.25	0.15	0.13	0.14	0.30	0.38
1.80	0.18	0.26	0.21	0.14	0.13	0.14	0.26	0.34
2.00	0.14	0.20	0.20	0.13	0.13	0.13	0.25	0.25

Table Notes

For P/H between those shown in this Table, either use the next highest P/H or interpolate.

Table 13.3.2j: Orientation sector winter exposure factor (E_W) — suspended floor: climate zone 5 (light-weight wall)

P/H	North	North east	East	South east	South	South west	West	North west
0.00	1.61	1.20	1.00	0.65	0.48	0.95	1.19	1.47
0.05	1.56	1.15	0.91	0.55	0.40	0.81	1.09	1.40
0.10	1.56	1.11	0.86	0.52	0.39	0.78	1.05	1.37

P/H	North	North east	East	South east	South	South west	West	North west
0.20	1.30	0.98	0.77	0.47	0.35	0.68	0.94	1.23
0.40	1.19	0.81	0.64	0.40	0.30	0.59	0.77	1.02
0.60	0.97	0.67	0.52	0.35	0.27	0.51	0.66	0.84
0.80	0.78	0.55	0.46	0.32	0.25	0.46	0.59	0.68
1.00	0.64	0.42	0.36	0.29	0.23	0.42	0.50	0.59
1.20	0.43	0.37	0.33	0.27	0.22	0.39	0.41	0.46
1.40	0.32	0.28	0.27	0.25	0.21	0.37	0.39	0.40
1.60	0.22	0.24	0.25	0.23	0.18	0.32	0.32	0.33
1.80	0.18	0.20	0.21	0.22	0.18	0.32	0.28	0.30
2.00	0.14	0.15	0.20	0.20	0.18	0.29	0.27	0.22

Table Notes

For P/H between those shown in this Table, either use the next highest P/H or interpolate.

Table 13.3.2k: Orientation sector winter exposure factor (E_W) — suspended floor: climate zone 5 (concrete or masonry wall)

P/H	North	North east	East	South east	South	South west	West	North west
0.00	1.71	1.24	1.00	0.63	0.44	0.94	1.19	1.54
0.05	1.66	1.19	0.91	0.53	0.37	0.80	1.09	1.47
0.10	1.66	1.14	0.86	0.50	0.36	0.77	1.05	1.43
0.20	1.39	1.01	0.77	0.45	0.32	0.68	0.94	1.28
0.40	1.27	0.84	0.64	0.39	0.28	0.58	0.77	1.07
0.60	1.03	0.69	0.52	0.34	0.25	0.51	0.66	0.87
0.80	0.83	0.57	0.46	0.31	0.23	0.46	0.59	0.71
1.00	0.68	0.43	0.36	0.27	0.22	0.41	0.50	0.61
1.20	0.46	0.38	0.33	0.26	0.20	0.39	0.41	0.49
1.40	0.34	0.28	0.27	0.24	0.19	0.36	0.39	0.42
1.60	0.24	0.25	0.25	0.23	0.17	0.31	0.32	0.35
1.80	0.19	0.21	0.21	0.21	0.17	0.31	0.28	0.31
2.00	0.15	0.16	0.20	0.19	0.17	0.29	0.27	0.23

Table Notes

For P/H between those shown in this Table, either use the next highest P/H or interpolate.

Table 13.3.2l: Orientation sector winter exposure factor (E_W) — floor in direct contact with the ground: climate zone 6

P/H	North	North east	East	South east	South	South west	West	North west
0.00	1.52	1.44	1.28	0.77	0.77	0.74	1.32	1.45
0.05	1.47	1.36	1.17	0.65	0.65	0.63	1.22	1.38
0.10	1.46	1.31	1.12	0.61	0.61	0.59	1.14	1.35
0.20	1.25	1.18	0.99	0.54	0.54	0.53	1.05	1.23
0.40	1.14	1.02	0.85	0.46	0.47	0.45	0.90	1.04
0.60	0.98	0.87	0.72	0.39	0.41	0.38	0.78	0.90
0.80	0.86	0.74	0.61	0.36	0.38	0.36	0.69	0.75
1.00	0.69	0.58	0.54	0.32	0.34	0.31	0.59	0.66

P/H	North	North east	East	South east	South	South west	West	North west
1.20	0.56	0.54	0.46	0.31	0.31	0.30	0.54	0.55
1.40	0.42	0.41	0.42	0.27	0.31	0.28	0.48	0.49
1.60	0.35	0.37	0.35	0.26	0.29	0.25	0.42	0.42
1.80	0.26	0.30	0.34	0.24	0.27	0.23	0.41	0.38
2.00	0.20	0.27	0.32	0.22	0.25	023	0.36	0.30

Table Notes

For P/H between those shown in this Table, either use the next highest P/H or interpolate.

Table 13.3.2m: Orientation sector winter exposure factor (E_W) — suspended floor: climate zone 6

P/H	North	North east	East	South east	South	South west	West	North west
0.00	1.62	1.31	1.16	0.72	0.49	0.90	1.10	1.44
0.05	1.56	1.24	1.06	0.60	0.41	0.76	1.01	1.37
0.10	1.55	1.19	1.02	0.57	0.39	0.72	0.95	1.34
0.20	1.33	1.07	0.90	0.51	0.35	0.64	0.88	1.23
0.40	1.22	0.93	0.77	0.43	0.30	0.54	0.75	1.04
0.60	1.04	0.79	0.65	0.37	0.26	0.46	0.65	0.90
0.80	0.92	0.67	0.55	0.33	0.24	0.44	0.58	0.75
1.00	0.73	0.53	0.49	0.30	0.22	0.38	0.49	0.65
1.20	0.60	0.50	0.42	0.29	0.20	0.36	0.45	0.55
1.40	0.45	0.38	0.38	0.25	0.20	0.34	0.40	0.49
1.60	0.37	0.34	0.32	0.24	0.18	0.30	0.35	0.42
1.80	0.27	0.28	0.30	0.22	0.17	0.28	0.34	0.38
2.00	0.21	0.25	0.29	0.21	0.16	0.28	0.30	0.30

Table Notes

For P/H between those shown in this Table, either use the next highest P/H or interpolate.

Table 13.3.2n: Orientation sector winter exposure factor (E_W) — floor in direct contact with the ground: climate zone 7

P/H	North	North east	East	South east	South	South west	West	North west
0.00	1.87	1.92	1.20	0.52	0.46	0.53	1.13	1.80
0.05	1.81	1.83	1.12	0.44	0.38	0.45	1.04	1.73
0.10	1.81	1.80	1.06	0.41	0.36	0.42	0.99	1.69
0.20	1.70	1.68	0.99	0.37	0.33	0.38	0.90	1.54
0.40	1.46	1.46	0.84	0.32	0.27	0.32	0.75	1.36
0.60	1.34	1.28	0.73	0.28	0.25	0.28	0.66	1.15
0.80	1.14	1.10	0.64	0.25	0.22	0.25	0.59	1.00
1.00	1.04	0.98	0.59	0.22	0.21	0.22	0.51	0.85
1.20	0.82	0.82	0.49	0.21	0.20	0.21	0.45	0.76
1.40	0.75	0.80	0.48	0.19	0.18	0.20	0.41	0.58
1.60	0.58	0.58	0.44	0.18	0.17	0.17	0.38	0.54
1.80	0.47	0.55	0.35	0.17	0.17	0.17	0.35	0.47
2.00	0.35	0.46	0.35	0.15	0.16	0.17	0.30	0.40

Table Notes

For P/H between those shown in this Table, either use the next highest P/H or interpolate.

Table 13.3.2o: Orientation sector winter exposure factor (E_W) — suspended floor: climate zone 7

P/H	North	North east	East	South east	South	South west	West	North east
0.00	1.87	1.43	1.20	0.75	0.53	0.93	1.13	1.62
0.05	1.81	1.37	1.12	0.63	0.44	0.78	1.04	1.56
0.10	1.81	1.34	1.06	0.59	0.42	0.73	0.99	1.53
0.20	1.70	1.25	0.99	0.53	0.38	0.66	0.90	1.38
0.40	1.46	1.09	0.84	0.45	0.32	0.56	0.75	1.22
0.60	1.34	0.95	0.73	0.40	0.29	0.49	0.66	1.04
0.80	1.14	0.82	0.64	0.36	0.26	0.44	0.59	0.90
1.00	1.04	0.73	0.59	0.32	0.24	0.39	0.51	0.77
1.20	0.82	0.61	0.49	0.30	0.23	0.37	0.45	0.68
1.40	0.75	0.60	0.48	0.28	0.21	0.34	0.41	0.52
1.60	0.58	0.43	0.44	0.26	0.20	0.29	0.38	0.49
1.80	0.47	0.41	0.35	0.24	0.20	0.29	0.35	0.42
2.00	0.35	0.34	0.35	0.22	0.18	0.29	0.30	0.36

Table Notes

For P/H between those shown in this Table, either use the next highest P/H or interpolate.

Table 13.3.2p: Orientation sector winter exposure factor (E_W) — floor in direct contact with the ground: climate zone 8

P/H	North	North east	East	South east	South	South west	West	North west
0.00	2.30	2.40	1.66	0.67	0.36	0.65	1.59	2.30
0.05	2.23	2.28	1.50	0.56	0.30	0.54	1.43	2.19
0.10	2.20	2.20	1.44	0.53	0.28	0.51	1.37	2.11
0.20	1.86	1.98	1.29	0.47	0.26	0.46	1.23	1.89
0.40	1.68	1.65	1.05	0.40	0.22	0.39	1.00	1.56
0.60	1.40	1.34	0.90	0.34	0.19	0.33	0.86	1.29
0.80	1.19	1.10	0.76	0.30	0.18	0.29	0.71	1.06
1.00	0.94	0.96	0.66	0.29	0.16	0.26	0.59	0.91
1.20	0.64	0.75	0.57	0.26	0.15	0.25	0.53	0.74
1.40	0.52	0.68	0.51	0.24	0.14	0.23	0.47	0.60
1.60	0.37	0.50	0.43	0.23	0.14	0.21	0.43	0.50
1.80	0.27	0.45	0.39	0.20	0.13	0.19	0.37	0.46
2.00	0.23	0.41	0.33	0.20	0.12	0.19	0.33	0.36

Table Notes

For P/H between those shown in this Table, either use the next highest P/H or interpolate.

Table 13.3.2q: Orientation sector winter exposure factor (E_W) — suspended floor — climate zone 8

P/H	North	North east	East	South east	South	South west	West	North west
0.00	1.39	1.27	1.22	0.80	0.59	0.90	1.05	1.28
0.05	1.35	1.21	1.10	0.66	0.49	0.74	0.95	1.22

P/H	North	North east	East	South east	South	South west	West	North west
0.10	1.33	1.17	1.05	0.63	0.46	0.71	0.91	1.17
0.20	1.12	1.05	0.95	0.56	0.42	0.63	0.82	1.05
0.40	1.02	0.88	0.77	0.47	0.35	0.53	0.66	0.87
0.60	0.85	0.71	0.66	0.41	0.31	0.46	0.57	0.72
0.80	0.72	0.58	0.56	0.36	0.29	0.40	0.47	0.59
1.00	0.57	0.51	0.48	0.34	0.26	0.36	0.39	0.51
1.20	0.39	0.40	0.42	0.30	0.25	0.34	0.35	0.41
1.40	0.32	0.36	0.38	0.29	0.23	0.32	0.31	0.33
1.60	0.22	0.27	0.32	0.27	0.22	0.29	0.29	0.28
1.80	0.17	0.24	0.29	0.24	0.21	0.27	0.25	0.25
2.00	0.14	0.22	0.24	0.24	0.20	0.27	0.22	0.20

Table Notes

For P/H between those shown in this Table, either use the next highest P/H or interpolate.

Table 13.3.2r: Bedroom conductance factor (BC)

Climate zone	Floor in direct contact with the ground	Suspended floor
2	0.90	0.70
3	1.11	0.70
4	1.10	0.95
5 (lightweight or masonry veneer wall)	1.20	0.60
5 (concrete or masonry wall)	0.70	1.20
6	1.10	1.10
7	1.08	0.80
8	0.83	0.82

Table 13.3.2s: Orientation sector conductance factor (OC): climate zone 2

Floor type	North	North east	East	South east	South	South west	West	North east
Floor in direct contact with the ground	1.11	0.97	0.83	0.81	0.79	0.82	0.84	0.98
Suspended floor	1.20	0.98	0.75	0.75	0.75	0.78	0.80	1.00

Table 13.3.2t: Orientation sector conductance factor (OC): climate zone 3

Floor type	North	North east	East	South east	South	South west	West	North west
Floor in direct contact with the ground	1.25	1.08	0.91	0.86	0.80	1.00	1.20	1.23
Suspended floor	1.20	1.15	1.10	0.95	0.80	1.01	1.21	1.21

Table 13.3.2u: Orientation sector conductance factor (OC): climate zone 4

Floor type	North	North east	East	South east	South	South west	West	North west
Floor in direct contact with the ground	1.15	0.93	0.70	0.75	0.80	0.80	0.80	0.98
Suspended floor	1.20	1.05	0.90	0.90	0.90	0.90	0.90	1.05

Table 13.3.2v: Orientation sector conductance factor (OC): climate zone 5

Wall construction	Floor type	North	North east	East	South east	South	South west	West	North west
Lightweight or masonry veneer	Floor in direct contact with the ground	1.20	1.00	0.80	0.75	0.70	0.75	0.80	1.00
Lightweight or masonry veneer	Suspended floor	1.20	1.00	0.80	0.80	0.80	0.85	0.90	1.05
Concrete or masonry	Floor in direct contact with the ground	1.00	0.90	0.80	0.85	0.90	0.90	0.90	0.95
Concrete or masonry	Suspended floor	1.00	0.98	0.95	0.93	0.90	0.93	0.95	0.98

Table 13.3.2w: Orientation sector conductance factor (OC): climate zone 6

Floor type	North	North east	East	South east	South	South west	West	North west
Floor in direct contact with the ground	1.05	0.98	0.90	0.85	0.80	0.85	0.90	0.98
Suspended floor	1.00	0.90	0.80	0.80	0.80	0.80	0.80	0.90

Table 13.3.2x: Orientation sector conductance factor (OC): climate zone 7

Floor type	North	North east	East	South east	South	South west	West	North west
Floor in direct contact with the ground	1.30	1.05	0.80	0.80	0.80	0.80	0.80	1.05
Suspended floor	1.30	1.10	0.90	0.90	0.90	0.90	0.90	1.10

Table 13.3.2y: Orientation sector conductance factor (OC): climate zone 8

Floor type	North	North east	East	South east	South	South west	West	North west
Floor in direct contact with the ground	1.30	1.10	0.90	0.88	0.85	0.88	0.90	1.10
Suspended floor	1.20	1.00	0.80	0.75	0.70	0.75	0.80	1.00

Table 13.3.2z: Winter solar heat gain factors: climate zone 2

Type of factor	Factor for a floor in direct contact with the ground	Factor for a suspended floor
Room factor (R_W) for a bedroom and a room which is not a *conditioned space*	0.40	1.00
Bedroom solar heat gain factor (BS_W)	1.80	1.02
Level factor (L_W) for all floor levels above the lowest floor	1.10	1.20
Frame factor (F_W) for frames with a solar absorptance of ≤ 0.40	0.98	0.97
Frame factor (F_W) for frames with a solar absorptance of > 0.40 to < 0.68	1.00	0.99
Frame factor (F_W) for frames with a solar absorptance of ≥ 0.68	1.03	1.03
Floor factor (for tiled or vinyl covered floor) (H_W)	1.14	Not applicable

Table Notes

Where a factor is listed as 'Not applicable', the value of the factor must be taken as 1.0.

Table 13.3.2aa: Winter solar heat gain factor: climate zone 3

Type of factor	Factor for a floor in direct contact with the ground	Factor for a suspended floor
Room factor (R_W) for a bedroom and a room which is not a *conditioned space*	0.26	1.00
Bedroom solar heat gain factor (BS_W)	0.79	0.50
Level factor (L_W) for all levels above the lowest floor	1.19	1.30
Frame factor (F_W) for frames with a solar absorptance of ≤ 0.40	0.97	0.97
Frame factor (F_W) for frames with a solar absorptance of > 0.40 to < 0.68	1.00	1.00
Frame factor (F_W) for frames with a solar absorptance of ≥ 0.68	1.04	1.04
Floor factor (for tiled or vinyl covered floor) (H_W)	1.15	Not applicable

Table Notes

Where a factor is listed as 'Not applicable', the value of the factor must be taken as 1.0.

Table 13.3.2ab: Winter solar heat gain factors: climate zone 4

Type of factor	Factor for a floor in direct contact with the ground	Factor for a suspended floor
Room factor (R_W) for a bedroom and a room which is not a *conditioned space*	0.60	1.00
Bedroom solar heat gain factor (BS_W)	0.70	0.71
Level factor (L_W) for all levels above the lowest floor	1.30	1.40
Frame factor (F_W) for frames with a solar absorptance of ≤ 0.40	0.98	0.98
Frame factor (F_W) for frames with a solar absorptance of > 0.40 to < 0.68	1.00	1.00
Frame factor (F_W) for frames with a solar absorptance of ≥ 0.68	1.04	1.04
Floor factor (for tiled or vinyl covered floor) (H_W)	1.03	Not applicable

Table Notes

Where a factor is listed as 'Not applicable', the value of the factor must be taken as 1.0.

Table 13.3.2ac: Winter solar heat gain factors: climate zone 5 — lightweight or masonry veneer wall

Type of factor	Factor for a floor in direct contact with the ground	Factor for a suspended floor
Room factor (R_W) for a bedroom and a room which is not a *conditioned space*	0.60	1.00
Bedroom solar heat gain factor (BS_W)	1.20	0.57
Level factor (L_W) for all floor levels above the lowest floor	1.30	1.20
Frame factor (F_W) for frames with a solar absorptance of ≤ 0.40	0.97	0.90
Frame factor (F_W) for frames with a solar absorptance of > 0.40 to < 0.68	1.00	0.93
Frame factor (F_W) for frames with a solar absorptance of ≥ 0.68	1.04	1.00
Floor factor (for tiled or vinyl covered floor) (H_W)	1.05	Not applicable

Table Notes

Where a factor is listed as 'Not applicable', the value of the factor must be taken as 1.0.

Table 13.3.2ad: Winter solar heat gain factors: climate zone 5 — concrete or masonry wall

Type of factor	Factor for a floor in direct contact with the ground	Factor for a suspended floor
Room factor (R_W) for a bedroom and a room which is not a *conditioned space*	0.40	0.30
Bedroom solar heat gain factor (BS_W)	1.00	0.60
Level factor (L_W) for all floor levels above the lowest floor	1.40	1.10
Frame factor (F_W) for frames with a solar absorptance of ≤ 0.40	0.97	0.90
Frame factor (F_W) for frames with a solar absorptance of > 0.40 to < 0.68	1.00	1.00
Frame factor (F_W) for frames with a solar absorptance of ≥ 0.68	1.04	1.00
Floor factor (for tiled or vinyl covered floor) (H_W)	1.10	Not applicable

Table Notes

(1) This Table only applies to dwellings with both high mass external and internal walls, for example masonry *cavity* walls and masonry internal walls.

(2) Where a factor is listed as 'Not applicable', the value of the factor must be taken as 1.0.

Table 13.3.2ae: Winter solar heat gain factors: climate zone 6

Type of factor	Factor for a floor in direct contact with the ground	Factor for a suspended floor
Room factor (R_W) for a bedroom and a room which is not a *conditioned space*	0.60	1.00
Bedroom solar heat gain factor (BS_W)	0.70	1.35
Level factor (L_W) for all floor levels above the lowest floor	1.30	1.40
Frame factor (F_W) for frames with a solar absorptance of > 0.40 to < 0.68	0.93	0.83
Frame factor (F_W) for frames with a solar absorptance of > 0.40 to < 0.68	0.96	0.96
Frame factor (F_W) for frames with a solar absorptance of ≥ 0.68	1.00	1.00
Floor factor (for tiled or vinyl covered floor) (H_W)	0.95	Not applicable

Table Notes

Where a factor is listed as 'Not applicable', the value of the factor must be taken as 1.0.

Table 13.3.2af: Winter solar heat gain factors: climate zone 7

Type of factor	Factor for a floor in direct contact with the ground	Factor for a suspended floor
Room factor (R_W) for a bedroom and a room which is not a *conditioned space*	0.60	1.00

Type of factor	Factor for a floor in direct contact with the ground	Factor for a suspended floor
Bedroom solar heat gain factor (BS_W)	1.22	0.50
Level factor (L_W) for all floor levels above the lowest floor	1.30	1.10
Frame factor (F_W) for frames with a solar absorptance of ≤ 0.40	0.97	0.97
Frame factor (F_W) for frames with a solar absorptance of > 0.40 to < 0.68	1.00	1.00
Frame factor (F_W) for frames with a solar absorptance of ≥ 0.68	1.05	1.05
Floor factor (for tiled or vinyl covered floor) (H_W)	1.03	Not applicable

Table Notes

Where a factor is listed as 'Not applicable', the value of the factor must be taken as 1.0.

Table 13.3.2ag: Winter solar heat gain factors: climate zone 8

Type of factor	Factor for a floor in direct contact with the ground	Factor for a suspended floor
Room factor (R_W) for a bedroom or a which is not a *conditioned space*	0.50	1.00
Bedroom solar heat gain factor (BS_W)	1.52	0.32
Level factor (L_W) for all floor levels above the lowest floor	1.15	0.70
Frame factor (F_W) for frames with a solar absorptance of ≤ 0.40	0.96	0.96
Frame factor (F_W) for frames with a solar absorptance of > 0.40 to < 0.68	1.00	1.00
Frame factor (F_W) for frames with a solar absorptance of ≥ 0.68	1.00	1.00
(H_W)	0.91	Not applicable

Table Notes

Where a factor is listed as 'Not applicable', the value of the factor must be taken as 1.0.

Figure 13.3.2a: Orientation sectors

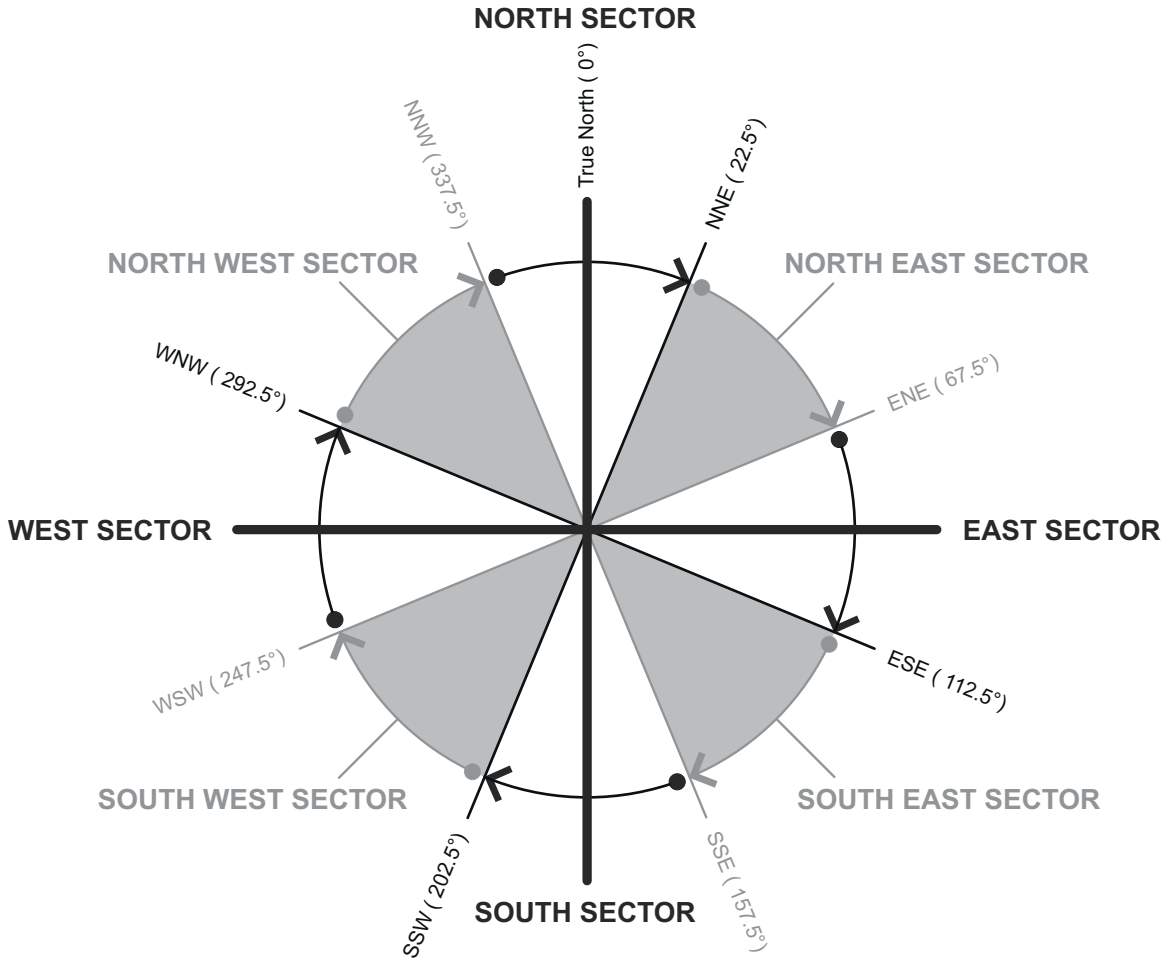

Figure Notes

(1) The orientation sector for a wall or *glazing* element is the sector that contains a line drawn perpendicular to the face of the wall or *glazing* element.

(2) This Figure is based on True North and all angles are measured clockwise from True North. Survey angles on site plans are usually marked in angles from True North. These angles can be used to establish True North for a particular site.

(3) Magnetic North, found by a magnetic compass, varies from True North over time and by different amounts in different locations. Magnetic North is not an acceptable approximation of True North.

(4) The eight orientation sectors shown in this Figure do not overlap at their boundaries. For example, north sector begins just clockwise after the NNW line and ends exactly on the NNE line. The start and end of other sectors are determined in a similar way, as indicated by the other curved arrows.

Figure 13.3.2b: Method of measuring P and H

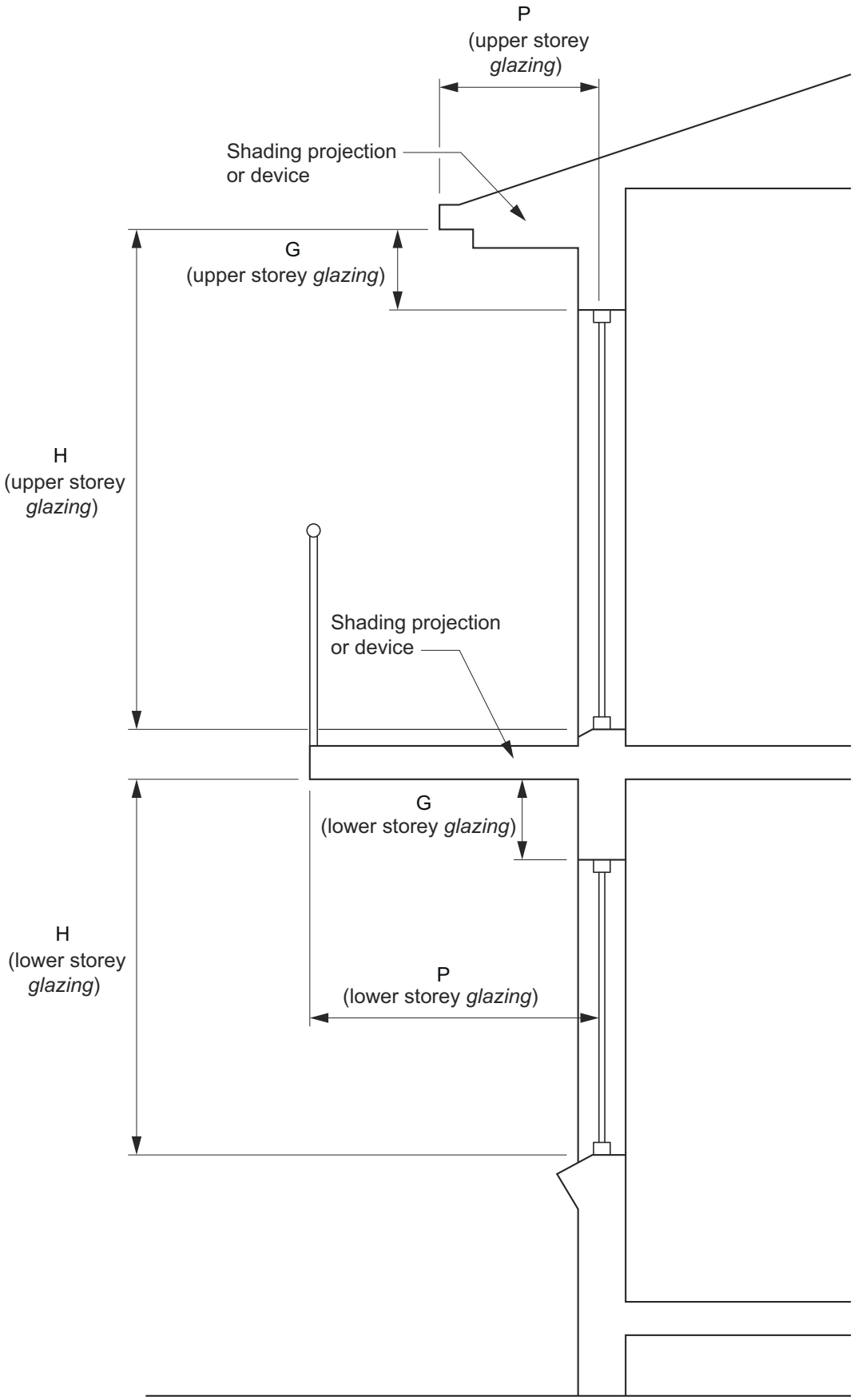

Figure Notes

(1) An external shading device that complies with 13.3.4(b) is considered to achieve a P/H value of 2.00.

(2) Where G exceeds 500 mm, the value of P must be halved.

Explanatory Information

- There is little or no need for heating at any time of the year in *climate zone* 1. Therefore, this clause does not apply in *climate zone* 1.
- For the bedroom conductance factor (BC), the conductance heat loss from *windows* in bedrooms and unconditioned areas has less impact on the heating loads of a dwelling than conductance heat loss from *windows* in a living area due to the different time of day that the rooms are occupied. Bedrooms are typically not occupied during the day when outdoor temperatures and solar heat gains are higher.
- For the orientation sector conductance factor (OC) in a room which has higher solar heat gain through the *glazing*, the average temperature in the room will be higher than an orientation which has lower solar heat gain through the *glazing*.

13.3.3 External glazing — summer

[New for 2022]

(1) In *climate zones* 1 to 7, the aggregate solar heat gain of the *glazing* in each *storey* of a building, including any *mezzanine*, must—

(a) not exceed the allowance resulting from multiplying the *floor area* of each *storey*, measured within the enclosing walls, by the constant C_{SHGC} obtained from Table 13.3.3a; and

(b) be calculated in accordance with the following formula:

$$(A_1 \times SHGC_1 \times E_{S1} \times R_{S1} \times L_{S1} \times F_{S1} \times H_{S1}) + (A_2 \times SHGC_2 \times E_{S2} \times R_{S2} \times L_{S2} \times F_{S2} \times H_{S2}) + \ldots$$

(2) In the formula at (1)(b)—

(a) $A_{1,2,etc}$ = the area of each *glazing* element; and

(b) $SHGC_{1,2,etc}$ = the *Total System SHGC* for each *glazing* element not exceeding 0.7; and

(c) $E_{S1,S2,etc}$ = the summer exposure factor for each *glazing* element obtained from Table 13.3.3b, 13.3.3c, 13.3.3d, 13.3.3e, 13.3.3f, 13.3.3g, 13.3.3h, 13.3.3i, 13.3.3j, 13.3.3k, 13.3.3l, 13.3.3m, 13.3.3n, 13.3.3o, 13.3.3p or 13.3.3q; and

(d) $R_{S1,S2,etc}$ = the factor in Table 13.3.3r, 13.3.3s, 13.3.3t, 13.3.3u, 13.3.3v, 13.3.3w, 13.3.3x or 13.3.3y for each *glazing* element located in a bedroom or room which is not a *conditioned space*; and

(e) $L_{S1,S2,etc}$ = the factor in Table 13.3.3r, 13.3.3s, 13.3.3t, 13.3.3u, 13.3.3v, 13.3.3w, 13.3.3x or 13.3.3y for each *glazing* element located on a floor level above the lowest floor; and

(f) $F_{S2,S2,etc}$ = the frame factor in Table 13.3.3r, 13.3.3s, 13.3.3t, 13.3.3u, 13.3.3v, 13.3.3w, 13.3.3x or 13.3.3y for each *glazing* element; and

(g) $H_{S1,S2,etc}$ = the floor factor in Table 13.3.3r, 13.3.3s, 13.3.3t, 13.3.3u, 13.3.3v, 13.3.3w, 13.3.3x or 13.3.3y for each *glazing* element.

(3) For the purposes of this clause—

(a) orientation sectors must be determined in accordance with Figure 13.3.2a; and

(b) P/H must be measured in accordance with Figure 13.3.2b.

Table 13.3.3a: Constant for solar heat gain coefficient (C_{SHGC}): climate zones 1 to 7

Floor type	*Ventilation opening* area	*Climate zone*							
		1	2	3	4	5 (lightweight wall)	5 (concrete or brick wall)	6	7
Floor in direct contact with the ground	5%	0.0672	0.0595	0.0945	0.0604	0.0484	0.0657	0.0786	0.0762
	10%	0.0718	0.0640	0.0985	0.0626	0.0538	0.0695	0.0817	0.0821
	15%	0.0770	0.0682	0.1001	0.0641	0.0569	0.0714	0.0832	0.0871
	20%	0.0827	0.0719	0.1007	0.0650	0.0587	0.0723	0.0840	0.0912
Suspended floor	5%	0.0431	0.0324	0.0768	0.0651	0.0334	0.0630	0.0963	0.0750
	10%	0.0497	0.0404	0.0783	0.0697	0.0426	0.0683	0.0989	0.0778
	15%	0.0541	0.0458	0.0792	0.0721	0.0477	0.0710	0.1001	0.0789
	20%	0.0570	0.0494	0.0796	0.0734	0.0505	0.0723	0.1007	0.0793

Table Notes

(1) The *ventilation opening* area is the total area of each *ventilation opening* divided by the *floor area* of the storey, including any *mezzanine*.

(2) No *window* may have a design *ventilation opening* greater than 90% because the window frame will always obstruct some of the area of the opening.

(3) Where the *ventilation opening* area is more than 20%, the C_{SHGC} value corresponding to 20% ventilation opening area is to be used.

(4) Where the floor construction of a storey, including any *mezzanine*, is partly in direct contact with the ground and partly suspended, the constant is to be—

(a) interpolated between the constants in proportion to the *floor area* of each floor type; or

(b) the constant for a suspended floor.

(5) If the *ventilation opening* area is between the values shown in this Table, the constant may be interpolated.

Table 13.3.3b: Orientation sector summer exposure factor (E_S) — floor in direct contact with the ground: climate zone 1

P/H	North	North east	East	South east	South	South west	West	North west
0.00	1.35	1.64	1.69	1.62	1.13	1.65	1.72	1.66
0.05	1.14	1.45	1.56	1.47	0.98	1.52	1.60	1.46
0.10	1.07	1.33	1.45	1.40	0.88	1.42	1.50	1.35
0.20	0.96	1.15	1.32	1.23	0.72	1.22	1.30	1.17
0.40	0.78	0.88	1.03	0.90	0.55	0.98	1.08	0.92
0.60	0.65	0.72	0.86	0.77	0.44	0.78	0.86	0.74
0.80	0.57	0.61	0.69	0.61	0.39	0.68	0.75	0.62
1.00	0.49	0.51	0.59	0.54	0.33	0.56	0.62	0.55
1.20	0.47	0.45	0.48	0.43	0.29	0.51	0.55	0.51
1.40	0.44	0.41	0.42	0.39	0.29	0.42	0.48	0.43
1.60	0.39	0.35	0.37	0.34	0.23	0.38	0.44	0.41
1.80	0.34	0.35	0.35	0.29	0.22	0.36	0.39	0.35
2.00	0.31	0.33	0.30	0.27	0.21	0.31	0.36	0.33

Table Notes

For P/H between those in this Table, either use the next lowest P/H or interpolate.

Table 13.3.3c: Orientation sector summer exposure factor (E_S) — suspended floor: climate zone 1

P/H	North	North east	East	South East	South	South west	West	North west
0.00	0.61	0.96	1.43	1.19	0.70	1.15	1.32	0.92
0.05	0.51	0.84	1.32	1.08	0.61	1.06	1.23	0.81
0.10	0.48	0.78	1.23	1.03	0.55	0.99	1.15	0.75
0.20	0.43	0.67	1.12	0.90	0.45	0.85	1.00	0.65
0.40	0.35	0.51	0.88	0.66	0.34	0.68	0.83	0.51
0.60	0.29	0.42	0.73	0.57	0.28	0.54	0.66	0.41
0.80	0.26	0.35	0.59	0.45	0.24	0.47	0.58	0.35
1.00	0.22	0.30	0.50	0.39	0.20	0.39	0.48	0.30
1.20	0.21	0.26	0.41	0.32	0.18	0.35	0.42	0.28
1.40	0.20	0.24	0.36	0.29	0.18	0.29	0.37	0.24
1.60	0.18	0.21	0.31	0.25	0.15	0.26	0.34	0.23
1.80	0.15	0.21	0.30	0.21	0.14	0.25	0.30	0.20
2.00	0.14	0.19	0.26	0.20	0.13	0.22	0.28	0.18

Table Notes

For P/H between those in this Table, either use the next lowest P/H or interpolate.

Table 13.3.3d: Orientation sector summer exposure factor (E_S) — floor in direct contact with the ground: climate zone 2

P/H	North	North east	East	South east	South	South west	West	North west
0.00	0.59	1.08	1.50	0.93	0.40	1.05	1.78	1.19
0.05	0.49	0.94	1.35	0.82	0.33	0.95	1.64	1.06
0.10	0.45	0.87	1.28	0.77	0.31	0.88	1.52	0.97
0.20	0.39	0.76	1.13	0.68	0.28	0.79	1.33	0.84

P/H	North	North east	East	South east	South	South west	West	North west
0.40	0.32	0.57	0.90	0.54	0.22	0.63	1.10	0.65
0.60	0.27	0.45	0.74	0.44	0.18	0.52	0.89	0.48
0.80	0.24	0.38	0.62	0.36	0.16	0.43	0.77	0.42
1.00	0.21	0.31	0.53	0.31	0.13	0.38	0.63	0.34
1.20	0.19	0.28	0.43	0.27	0.12	0.32	0.55	0.30
1.40	0.17	0.25	0.39	0.25	0.12	0.28	0.48	0.26
1.60	0.16	0.24	0.34	0.22	0.10	0.25	0.41	0.24
1.80	0.14	0.21	0.30	0.20	0.09	0.24	0.37	0.22
2.00	0.14	0.19	0.27	0.19	0.09	0.21	0.36	0.20

Table Notes

For P/H between those in this Table, either use the next lowest P/H or interpolate.

Table 13.3.3e: Orientation sector summer exposure factor (E_S) — suspended floor: climate zone 2

P/H	North	North east	East	South east	South	South west	West	North west
0.00	0.43	0.81	1.16	0.75	0.36	1.06	1.88	1.11
0.05	0.36	0.71	1.05	0.67	0.30	0.96	1.72	0.99
0.10	0.33	0.66	0.99	0.62	0.29	0.89	1.60	0.90
0.20	0.28	0.57	0.87	0.55	0.25	0.80	1.40	0.78
0.40	0.23	0.43	0.69	0.44	0.20	0.64	1.16	0.60
0.60	0.20	0.34	0.57	0.36	0.17	0.52	0.94	0.45
0.80	0.17	0.29	0.48	0.30	0.15	0.44	0.81	0.39
1.00	0.16	0.23	0.41	0.25	0.12	0.38	0.66	0.32
1.20	0.14	0.21	0.33	0.22	0.11	0.32	0.57	0.28
1.40	0.13	0.19	0.30	0.20	0.11	0.29	0.50	0.24
1.60	0.11	0.18	0.27	0.18	0.10	0.26	0.43	0.22
1.80	0.10	0.16	0.23	0.16	0.09	0.25	0.39	0.20
2.00	0.10	0.15	0.21	0.15	0.08	0.21	0.38	0.19

Table Notes

For P/H between those in this Table, either use the next lowest P/H or interpolate.

Table 13.3.3f: Orientation sector summer exposure factor (E_S) — floor in direct contact with the ground: climate zone 3

P/H	North	North east	East	South east	South	South west	West	North west
0.00	0.95	1.51	1.70	1.53	0.92	1.45	1.50	1.41
0.05	0.80	1.36	1.58	1.40	0.80	1.31	1.39	1.26
0.10	0.75	1.23	1.50	1.33	0.76	1.24	1.31	1.16
0.20	0.65	1.06	1.32	1.17	0.64	1.09	1.17	1.02
0.40	0.54	0.81	1.06	0.92	0.53	0.90	0.92	0.78
0.60	0.48	0.62	0.89	0.75	0.43	0.71	0.78	0.62
0.80	0.41	0.51	0.71	0.61	0.38	0.63	0.66	0.49
1.00	0.34	0.42	0.60	0.52	0.34	0.54	0.58	0.41
1.20	0.32	0.38	0.50	0.44	0.29	0.46	0.47	0.36
1.40	0.29	0.32	0.42	0.40	0.28	0.40	0.45	0.32

P/H	North	North east	East	South east	South	South west	West	North west
1.60	0.29	0.29	0.40	0.35	0.22	0.39	0.39	0.29
1.80	0.26	0.28	0.36	0.31	0.22	0.35	0.36	0.27
2.00	0.26	0.26	0.30	0.31	0.21	0.30	0.30	0.24

Table Notes

For P/H between those in this Table, either use the next lowest P/H or interpolate.

Table 13.3.3g: Orientation sector summer exposure factor (E_S) — suspended floor: climate zone 3

P/H	North	North east	East	South east	South	South west	West	North west
0.00	0.78	1.30	1.56	1.36	0.79	1.16	1.09	1.11
0.05	0.66	1.18	1.45	1.24	0.68	1.05	1.01	0.99
0.10	0.62	1.06	1.38	1.17	0.65	0.99	0.95	0.91
0.20	0.53	0.91	1.21	1.04	0.55	0.87	0.85	0.80
0.40	0.45	0.70	0.97	0.82	0.46	0.72	0.67	0.62
0.60	0.39	0.54	0.81	0.67	0.37	0.57	0.57	0.48
0.80	0.34	0.44	0.65	0.54	0.32	0.50	0.48	0.39
1.00	0.28	0.36	0.55	0.46	0.29	0.43	0.42	0.32
1.20	0.27	0.33	0.46	0.39	0.25	0.37	0.34	0.29
1.40	0.24	0.28	0.39	0.36	0.24	0.32	0.33	0.25
1.60	0.24	0.25	0.36	0.31	0.19	0.31	0.28	0.23
1.80	0.21	0.24	0.33	0.28	0.19	0.28	0.26	0.21
2.00	0.21	0.23	0.28	0.28	0.18	0.24	0.22	0.19

Table Notes

For P/H between those in this Table, either use the next lowest P/H or interpolate.

Table 13.3.3h: Orientation sector summer exposure factor (E_S) — floor in direct contact with the ground: climate zone 4

P/H	North	North east	East	South east	South	South west	West	North west
0.00	0.83	1.13	1.05	0.68	0.31	0.99	1.90	1.46
0.05	0.70	1.05	0.98	0.63	0.27	0.91	1.77	1.33
0.10	0.64	0.95	0.93	0.59	0.25	0.85	1.70	1.22
0.20	0.49	0.83	0.84	0.53	0.23	0.76	1.52	1.05
0.40	0.35	0.63	0.69	0.44	0.19	0.62	1.23	0.81
0.60	0.31	0.48	0.56	0.36	0.16	0.53	1.04	0.59
0.80	0.28	0.36	0.47	0.32	0.14	0.45	0.86	0.47
1.00	0.23	0.29	0.41	0.27	0.12	0.39	0.74	0.39
1.20	0.22	0.25	0.35	0.24	0.11	0.35	0.65	0.33
1.40	0.18	0.22	0.29	0.22	0.09	0.33	0.55	0.27
1.60	0.18	0.19	0.29	0.20	0.09	0.29	0.48	0.26
1.80	0.16	0.17	0.24	0.18	0.08	0.25	0.46	0.22
2.00	0.15	0.16	0.21	0.15	0.08	0.24	0.38	0.21

Table Notes

For P/H between those in this Table, either use the next lowest P/H or interpolate.

Table 13.3.3i: Orientation sector summer exposure factor (E_S) — suspended floor: climate zone 4

P/H	North	North east	East	South east	South	South west	West	North west
0.00	0.79	1.13	1.12	0.68	0.29	0.64	1.05	1.06
0.05	0.66	1.05	1.05	0.63	0.25	0.59	0.98	0.97
0.10	0.61	0.95	0.99	0.59	0.23	0.55	0.94	0.89
0.20	0.52	0.83	0.90	0.53	0.21	0.49	0.84	0.77
0.40	0.43	0.63	0.74	0.44	0.17	0.40	0.68	0.59
0.60	0.36	0.48	0.59	0.36	0.15	0.34	0.58	0.43
0.80	0.32	0.36	0.50	0.32	0.13	0.29	0.47	0.34
1.00	0.29	0.29	0.44	0.27	0.11	0.25	0.41	0.29
1.20	0.25	0.25	0.37	0.24	0.10	0.23	0.36	0.24
1.40	0.23	0.22	0.31	0.22	0.09	0.21	0.30	0.20
1.60	0.21	0.19	0.30	0.20	0.08	0.19	0.26	0.19
1.80	0.19	0.17	0.26	0.18	0.07	0.16	0.26	0.16
2.00	0.19	0.16	0.22	0.15	0.07	0.16	0.21	0.15

Table Notes

For P/H between those in this Table, either use the next lowest P/H or interpolate.

Table 13.3.3j: Orientation sector summer exposure factor (E_S) — floor in direct contact with the ground: climate zone 5 (lightweight or masonry veneer wall)

P/H	North	North east	East	South east	South	South west	West	North west
0.00	0.62	0.79	0.83	0.67	0.48	1.04	1.69	1.19
0.05	0.52	0.70	0.75	0.60	0.40	0.92	1.55	1.07
0.10	0.47	0.64	0.71	0.55	0.38	0.86	1.44	0.96
0.20	0.38	0.55	0.62	0.49	0.34	0.76	1.29	0.85
0.40	0.29	0.42	0.50	0.40	0.27	0.62	1.05	0.64
0.60	0.26	0.33	0.41	0.33	0.23	0.51	0.85	0.49
0.80	0.23	0.27	0.35	0.28	0.20	0.43	0.68	0.41
1.00	0.20	0.22	0.29	0.24	0.18	0.37	0.60	0.32
1.20	0.18	0.19	0.25	0.21	0.15	0.33	0.52	0.28
1.40	0.16	0.17	0.22	0.19	0.14	0.29	0.44	0.25
1.60	0.15	0.16	0.20	0.16	0.13	0.27	0.39	0.22
1.80	0.14	0.15	0.18	0.15	0.12	0.23	0.35	0.21
2.00	0.13	0.12	0.17	0.15	0.11	0.21	0.33	0.19

Table Notes

For P/H between those in this Table, either use the next lowest P/H or interpolate.

Table 13.3.3k: Orientation sector summer exposure factor (E_S) — floor in direct contact with the ground: climate zone 5 (concrete or masonry wall)

P/H	North	North east	East	South east	South	South west	West	North west
0.00	0.98	1.14	1.07	0.60	0.24	0.78	1.50	1.36
0.05	0.83	1.01	0.96	0.53	0.20	0.69	1.37	1.22
0.10	0.76	0.92	0.91	0.49	0.19	0.65	1.28	1.10
0.20	0.61	0.80	0.80	0.44	0.17	0.57	1.14	0.98

P/H	North	North east	East	South east	South	South west	West	North west
0.40	0.47	0.61	0.64	0.36	0.13	0.47	0.93	0.73
0.60	0.42	0.48	0.52	0.29	0.12	0.38	0.75	0.56
0.80	0.36	0.39	0.45	0.25	0.10	0.32	0.60	0.47
1.00	0.31	0.33	0.38	0.21	0.09	0.28	0.53	0.36
1.20	0.29	0.27	0.32	0.19	0.08	0.25	0.46	0.32
1.40	0.25	0.24	0.29	0.17	0.07	0.22	0.39	0.28
1.60	0.24	0.23	0.26	0.14	0.06	0.20	0.35	0.25
1.80	0.22	0.21	0.23	0.13	0.06	0.17	0.31	0.24
2.00	0.20	0.18	0.22	0.13	0.06	0.16	0.29	0.22

Table Notes

For P/H between those in this Table, either use the next lowest P/H or interpolate.

Table 13.3.3l: Orientation sector summer exposure factor (E_S) — suspended floor: climate zone 5 (lightweight or masonry veneer wall)

P/H	North	North east	East	South East	South	South west	West	North west
0.00	0.67	0.93	1.05	0.61	0.27	0.67	1.16	0.99
0.05	0.57	0.82	0.94	0.54	0.23	0.59	1.06	0.89
0.10	0.52	0.75	0.89	0.51	0.22	0.55	0.99	0.80
0.20	0.42	0.65	0.78	0.45	0.19	0.49	0.88	0.71
0.40	0.32	0.49	0.62	0.36	0.15	0.40	0.72	0.53
0.60	0.29	0.39	0.51	0.30	0.13	0.33	0.58	0.41
0.80	0.25	0.31	0.44	0.26	0.11	0.28	0.46	0.34
1.00	0.21	0.26	0.37	0.22	0.10	0.24	0.41	0.27
1.20	0.20	0.22	0.32	0.19	0.09	0.21	0.36	0.23
1.40	0.17	0.20	0.28	0.17	0.08	0.19	0.30	0.21
1.60	0.16	0.19	0.26	0.15	0.07	0.17	0.27	0.18
1.80	0.15	0.17	0.22	0.13	0.07	0.15	0.24	0.17
2.00	0.14	0.14	0.21	0.13	0.06	0.14	0.22	0.16

Table Notes

For P/H between those in this Table, either use the next lowest P/H or interpolate.

Table 13.3.3m: Orientation sector summer exposure factor (E_S) — suspended floor: climate zone 5 (concrete or masonry wall)

P/H	North	North east	East	South east	South	South west	West	North west
0.00	0.82	1.04	1.07	0.72	0.41	0.78	1.17	1.10
0.05	0.69	0.91	0.96	0.64	0.34	0.69	1.07	0.99
0.10	0.63	0.84	0.91	0.59	0.32	0.65	1.00	0.89
0.20	0.51	0.72	0.80	0.53	0.29	0.57	0.89	0.79
0.40	0.39	0.55	0.64	0.43	0.23	0.47	0.73	0.59
0.60	0.35	0.44	0.52	0.35	0.20	0.38	0.59	0.46
0.80	0.30	0.35	0.45	0.30	0.17	0.32	0.47	0.38
1.00	0.26	0.29	0.38	0.26	0.15	0.28	0.41	0.29
1.20	0.24	0.25	0.32	0.23	0.13	0.25	0.36	0.26

P/H	North	North east	East	South east	South	South west	West	North west
1.40	0.21	0.22	0.29	0.20	0.12	0.22	0.31	0.23
1.60	0.20	0.21	0.26	0.17	0.11	0.20	0.27	0.20
1.80	0.18	0.19	0.23	0.16	0.10	0.17	0.24	0.19
2.00	0.17	0.16	0.22	0.16	0.10	0.16	0.23	0.18

Table Notes

For P/H between those in this Table, either use the next lowest P/H or interpolate.

Table 13.3.3n: Orientation sector summer exposure factor (E_S) — floor in direct contact with the ground: climate zone 6

P/H	North	North east	East	South east	South	South west	West	North west
0.00	1.01	1.19	1.15	0.78	0.49	1.10	1.82	1.55
0.05	0.85	1.07	1.05	0.70	0.42	1.01	1.69	1.41
0.10	0.78	0.99	0.99	0.67	0.39	0.96	1.63	1.30
0.20	0.62	0.85	0.88	0.59	0.35	0.86	1.46	1.14
0.40	0.43	0.64	0.71	0.49	0.29	0.70	1.17	0.86
0.60	0.36	0.47	0.61	0.41	0.25	0.61	0.99	0.64
0.80	0.31	0.39	0.50	0.34	0.21	0.53	0.86	0.50
1.00	0.26	0.32	0.42	0.29	0.18	0.44	0.73	0.45
1.20	0.24	0.26	0.37	0.26	0.18	0.41	0.62	0.36
1.40	0.22	0.24	0.32	0.23	0.15	0.36	0.55	0.33
1.60	0.19	0.21	0.28	0.22	0.14	0.33	0.49	0.26
1.80	0.18	0.20	0.26	0.20	0.14	0.29	0.44	0.25
2.00	0.17	0.19	0.24	0.19	0.14	0.27	0.40	0.21

Table Notes

For P/H between those in this Table, either use the next lowest P/H or interpolate.

Table 13.3.3o: Orientation sector summer exposure factor (E_S) — suspended floor: climate zone 6

P/H	North	North east	East	South east	South	South west	West	North west
0.00	0.88	1.05	1.04	0.57	0.24	0.96	2.00	1.54
0.05	0.75	0.95	0.95	0.51	0.21	0.88	1.86	1.40
0.10	0.68	0.88	0.89	0.48	0.20	0.83	1.79	1.29
0.20	0.55	0.75	0.79	0.42	0.18	0.75	1.60	1.13
0.40	0.38	0.57	0.64	0.35	0.14	0.61	1.29	0.86
0.60	0.32	0.42	0.55	0.29	0.12	0.53	1.09	0.63
0.80	0.27	0.34	0.45	0.25	0.10	0.46	0.94	0.50
1.00	0.23	0.28	0.38	0.21	0.09	0.38	0.80	0.45
1.20	0.21	0.23	0.33	0.19	0.09	0.36	0.69	0.36
1.40	0.19	0.21	0.29	0.17	0.08	0.31	0.60	0.32
1.60	0.17	0.19	0.25	0.16	0.07	0.28	0.54	0.26
1.80	0.16	0.18	0.23	0.14	0.07	0.26	0.49	0.25
2.00	0.15	0.17	0.22	0.14	0.07	0.24	0.44	0.21

Table Notes

For P/H between those in this Table, either use the next lowest P/H or interpolate.

Table 13.3.3p: Orientation sector summer exposure factor (E_S) — floor in direct contact with the ground: climate zone 7

P/H	North	North east	East	South east	South	South west	West	North west
0.00	1.06	1.30	1.36	1.09	0.77	1.11	1.49	1.39
0.05	0.91	1.17	1.23	0.96	0.65	0.99	1.36	1.26
0.10	0.84	1.08	1.16	0.93	0.61	0.93	1.29	1.15
0.20	0.68	0.94	1.04	0.81	0.54	0.83	1.14	1.01
0.40	0.44	0.72	0.85	0.67	0.46	0.67	0.93	0.75
0.60	0.35	0.57	0.73	0.58	0.40	0.58	0.79	0.60
0.80	0.31	0.44	0.60	0.51	0.34	0.50	0.66	0.47
1.00	0.28	0.37	0.54	0.43	0.30	0.43	0.55	0.38
1.20	0.24	0.31	0.46	0.39	0.28	0.38	0.48	0.32
1.40	0.21	0.26	0.40	0.35	0.25	0.34	0.41	0.28
1.60	0.20	0.23	0.37	0.31	0.24	0.32	0.39	0.25
1.80	0.19	0.22	0.31	0.28	0.22	0.29	0.34	0.22
2.00	0.18	0.21	0.30	0.27	0.22	0.26	0.31	0.21

Table Notes

For P/H between those in this Table, either use the next lowest P/H or interpolate.

Table 13.3.3q: Orientation sector summer exposure factor (E_S) — suspended floor: climate zone 7

P/H	North	North east	East	South east	South	South west	West	North west
0.00	1.15	1.17	0.97	0.75	0.51	0.77	1.07	1.24
0.05	1.00	1.05	0.88	0.66	0.43	0.69	0.98	1.12
0.10	0.91	0.97	0.83	0.64	0.41	0.65	0.93	1.03
0.20	0.74	0.85	0.74	0.56	0.36	0.58	0.82	0.90
0.40	0.48	0.65	0.61	0.46	0.30	0.47	0.67	0.67
0.60	0.38	0.51	0.52	0.40	0.26	0.40	0.57	0.54
0.80	0.34	0.40	0.43	0.35	0.22	0.35	0.48	0.42
1.00	0.30	0.33	0.38	0.30	0.20	0.30	0.40	0.34
1.20	0.26	0.28	0.33	0.27	0.18	0.26	0.34	0.28
1.40	0.23	0.23	0.29	0.24	0.17	0.24	0.30	0.25
1.60	0.22	0.21	0.26	0.22	0.16	0.22	0.28	0.22
1.80	0.20	0.20	0.22	0.19	0.14	0.20	0.24	0.20
2.00	0.19	0.19	0.22	0.18	0.14	0.18	0.23	0.19

Table Notes

For P/H between those in this Table, either use the next lowest P/H or interpolate.

Table 13.3.3r: Summer solar heat gain factors: climate zone 1

Type of factor	Factor for a floor in direct contact with the ground	Factor for a suspended floor
Room factor (R_S) for a bedroom and a room which is not a *conditioned space*	0.60	0.57
Level factor (L_S) for all other floor levels	1.20	1.35

Type of factor	Factor for a floor in direct contact with the ground	Factor for a suspended floor
Frame factor (F_S) for frames with a solar absorptance of ≤ 0.40	0.91	0.87
Frame factor (F_S) for frames with a solar absorptance of > 0.40 to < 0.68	1.00	1.00
Frame factor (F_S) for frames with a solar absorptance of ≥ 0.68	1.15	1.21
Floor factor (for tiled or vinyl covered floor) (H_S)	0.75	Not applicable

Table Notes

Where a factor is listed as 'Not applicable', the value of the factor must be taken 1.0.

Table 13.3.3s: Summer solar heat gain factors: climate zone 2

Type of factor	Factor for a floor in direct contact with the ground	Factor for a suspended floor
Room factor (R_S) for a bedroom and a room which is not a *conditioned space*	0.60	0.40
Level factor (L_S) for all other floor levels	1.20	1.10
Frame factor (F_S) for frames with a solar absorptance of ≤ 0.40	0.91	0.68
Frame factor (F_S) for frames with a solar absorptance of > 0.40 to < 0.68	1.00	0.90
Frame factor (F_S) for frames with a solar absorptance of ≥ 0.68	1.19	1.00
Floor factor (for tiled or vinyl covered floor) (H_S)	0.75	Not applicable

Table Notes

Where a factor is listed as 'Not applicable', the value of the factor must be taken as 1.0.

Table 13.3.3t: Summer solar heat gain factors: climate zone 3

Type of factor	Factor for a floor in direct contact with the ground	Factor for a suspended floor
Room factor (R_S) for a bedroom and a room which is not a *conditioned space*	0.90	0.70
Level factor (L_S) for all other floor levels	1.70	1.90
Frame factor (F_S) for frames with a solar absorptance of ≤ 0.40	0.88	0.88
Frame factor (F_S) for frames with a solar absorptance of < 0.40 to < 0.68	1.00	1.00
Frame factor (F_S) for frames with a solar absorptance of ≥ 0.68	1.21	1.21
Floor factor (for tiled or vinyl covered floor (H_S)	0.89	Not applicable

Table Notes

Where a factor is listed as 'Not applicable', the value of the factor must be taken as 1.0.

Table 13.3.3u: Summer solar heat gain factors: climate zone 4

Type factor	Factor for a floor in direct contact with the ground	Factor for a suspended floor
Room factor (R_S) for a bedroom and a room which is not a *conditioned space*	0.35	0.80
Level factor (L_S) for all other floor levels	1.10	1.20
Frame factor (F_S) for frames with a solar absorptance of ≤ 0.40	0.88	0.88
Frame factor (F_S) for frames with a solar absorptance of > 0.40 to < 0.68	1.00	0.91
Frame factor (F_S) for frames with a solar absorptance of ≥ 0.68	1.19	1.00
Floor factor (for tiled or vinyl covered floor) (H_S)	0.91	Not applicable

Table Notes

Where a factor is listed as 'Not applicable', the value of the factor must be taken as 1.0.

Table 13.3.3v: Summer solar heat gain factors: climate zone 5 (lightweight or masonry veneer wall)

Type of factor	Factor for a floor in direct contact with the ground	Factor for a suspended floor
Room factor (R_S) for a bedroom and a room which is not a *conditioned space*	0.45	0.52
Level factor (L_S) for all other floor levels	1.20	1.45
Frame factor (F_S) for frames with a solar absorptance of ≤ 0.40	0.88	0.73
Frame factor (F_S) for frames with a solar absorptance of > 0.40 to < 0.68	1.00	0.78
Frame factor (F_S) for frames with a solar absorptance of ≥ 0.68	1.20	1.00
Floor factor (for tiled or vinyl covered floor) (H_S)	0.65	Not applicable

Table Notes

Where a factor is listed as 'Not applicable', the value of the factor must be taken as 1.0.

Table 13.3.3w: Summer solar heat gain factors: climate zone 5 (concrete or masonry wall)

Type of factor	Factor for a floor in direct contact with the ground	Factor for a suspended floor
Room factor (R_S) for a bedroom and a room which is not a *conditioned space*	0.50	0.35
Level factor (L_S) for all other floor levels	1.40	1.30

Type of factor	Factor for a floor in direct contact with the ground	Factor for a suspended floor
Frame factor (F_S) for frames with a solar absorptance of ≤ 0.40	0.89	0.90
Frame factor (F_S) for frames with a solar absorptance of > 0.40 to < 0.68	1.00	0.95
Frame factor (F_S) for frames with a solar absorptance of ≥ 68	1.18	1.00
Floor factor (for tiled or vinyl covered floor) (H_S)	0.60	Not applicable

Table Notes

(1) This Table only applies to dwellings with both high mass external and internal walls, for example masonry *cavity* external and internal walls.

(2) Where a factor is listed as 'Not applicable', the value of the factor must be taken as 1.0.

Table 13.3.3x: Summer solar heat gain factors: climate zone 6

Type of factor	Factor for a floor in direct contact with the ground	Factor for suspended floor
Room factor (R_S) for a bedroom and a room which is not a *conditioned space*	0.60	0.80
Level factor (L_S) for all other floor levels	1.40	1.60
Frame factor (F_S) for frames with a solar absorptance of ≤ 0.40	0.84	0.83
Frame factor (F_S) for frames with a solar absorptance of > 0.40 to < 0.68	0.90	0.96
Frame factor (F_S) for frames with a solar absorptance of ≥ 0.68	1.00	1.00
Floor factor (for tiled or vinyl covered floor) (H_S)	0.80	Not applicable

Table Notes

Where a factor is listed as 'Not applicable', the value of the factor must be taken as 1.0.

Table 13.3.3y: Summer solar heat gain factors: climate zone 7

Type of factor	Factor for a floor in direct contact with the ground	Factor for a suspended floor
Room factor (R_S) for a bedroom and a room which is not a *conditioned space*	0.40	0.40
Level factor (L_S) for all other floor levels	1.40	1.30
Frame factor (F_S) for frames with a solar absorptance of ≤ 0.40	0.91	0.85
Frame factor (F_S) for frames with a solar absorptance of > 0.40 to < 0.68	1.00	1.00
Frame factor (F_S) for frames with a solar absorptance of ≥ 0.68	1.00	1.00

Type of factor	Factor for a floor in direct contact with the ground	Factor for a suspended floor
Floor factor (for tiled or vinyl covered floor) (H_S)	0.85	Not applicable

Table Notes

Where a factor is listed as 'Not applicable', the value of the factor must be taken as 1.0.

Explanatory Information

- There is little or no need for cooling at any time of the year in *climate zone* 8. Therefore, this clause does not apply in *climate zone* 8.
- By referring to '*glazing* elements', 13.3.3 require *Total System U-Values* and *Total System SHGCs* to be assessed for the combined effect of glass and frames. The measurement of these *Total System U-Values* and *Total System SHGCs* is specified in the Technical Protocols and Procedures Manual for Energy Rating of Fenestration by the Australian Fenestration Rating Council (AFRC) for *glazing* elements of representative size and arrangements.
- Various assessors using AFRC procedures might refer to their published performance values by slightly different terms including 'U Factor' or 'Uw' for *Total System U-Value* or 'SHGC' for *Total System SHGC*. Such values can be used under 13.3.3 provided they measure the combined glass and frame performance according to AFRC requirements.
- For the room factor, the solar heat gains to bedrooms and unconditioned areas have less impact on the cooling loads of dwellings than solar heat gains to a living area due to the different time of day that the rooms are occupied. Bedrooms are typically not occupied during the day when outdoor temperatures and solar heat gains are higher.
- For the frame factor, the darker the window frame, the greater the solar heat gain through the frame. Radiation gains from *windows* are multiplied by this factor.
- For the floor factor, this is only applied for dwellings with a floor in contact with the ground. If a room has a tiled surface or is a polished slab, radiation gains in this room are multiplied by this factor.

13.3.4 Shading

[2019: 3.12.2.2]

Where shading is *required* to comply with 13.3.2 or 13.3.3, it must—

(a) be provided by an external permanent projection, such as a verandah, balcony, fixed canopy, eaves, shading hood or carport, which—

(i) extends horizontally on both sides of the *glazing* for a distance greater than or equal to the projection distance P in Figure 13.3.2b; or

(ii) provide the equivalent shading to (i) with a reveal or the like; or

(b) be provided by an external shading device, such as a shutter, blind, vertical or horizontal building screen with blades, battens or slats, which—

(i) is capable of restricting at least 80% of the summer solar radiation; and

(ii) if adjustable, is readily operated either manually, mechanically or electronically by the building occupants.

Explanatory Information

- Shading devices can include fixed louvres, shading screens and other types of perforated or fixed angle slatted shades. However, such devices need to be designed for the climate and latitude to ensure that summer sun penetration is restricted, while winter sun access is achieved. Winter access refers to the availability of winter solar gains to offset conducted heat losses.
- The impact of shading is assessed with respect to the solar heat gain of the *glazing*. The requirements of 13.3.2 and 13.3.3 consider solar heat gain to be either beneficial or detrimental to the energy efficiency of a building based on seasonal variation (winter/summer), *climate zone*, orientation and P/H. Higher P/H values are more beneficial in minimising summer solar heat gain where as lower P/H values are more beneficial in allowing winter access.
- Gutters can only be considered as providing shading if attached to a shading projection such as a verandah, fixed

canopy, eaves, shading hood, balcony or the like.

- Shading devices can be either attached or located adjacent to the building. For example, a free-standing lattice screen may be considered to provide shading to *glazing* if it complies with 13.3.4(b).
- An adjustable shading device in 13.3.4(b)(ii) should be readily operated from a safe location or platform that does not require ladders, rigging, harnessing, or the like.

Part 13.4 Building sealing

NT Part 13.4

TAS Part 13.4

NSW 13.4.1

13.4.1 Application of Part 13.4

[2019: 3.12.3]

(1) This Part applies to—

(a) a Class 1 building; and

(b) a Class 10a building with a *conditioned space*.

(2) The provisions of (1) do not apply to the following:

(a) A building in *climate zones* 1, 2, 3 and 5 where the only means of air-conditioning is by using an evaporative cooler.

(b) A permanent building *ventilation opening* that is necessary for the safe operation of a gas appliance.

(3) Part 13.4 must be applied as directed in H6D2(1)(a) or (b).

Explanatory Information

- An evaporatively cooled building in *climate zones* 4 and 6 must be sealed because of the likelihood of the building being heated during colder periods.
- Appropriate ventilation requirements for gas appliances can be obtained from relevant legislation, referenced standards and product installation manuals.

13.4.2 Chimneys and flues

[2019: 3.12.3.1]

The chimney or flue of an open solid-fuel burning appliance must be provided with a damper or flap that can be closed to seal the chimney or flue.

Explanatory Information

- The requirements of this Part are to be read in conjunction with the fire safety requirements in Part 12.4 of the ABCB Housing Provisions.
- A solid-fuel burning appliance is a heater that burns materials such as timber, coal and the like. This clause does not apply to gas and liquid fuel burning appliances.

13.4.3 Roof lights

[2019: 3.12.3.2]

(1) A *roof light* must be sealed, or capable of being sealed, when serving—

(a) a *conditioned space*; or

(b) a *habitable room* in *climate zones* 4, 5, 6, 7 and 8.

(2) A *roof light required* by (1) to be sealed, or capable of being sealed, must be constructed with—

(a) an imperforate ceiling diffuser or the like installed at the ceiling or internal lining level; or

(b) a weatherproof seal; or

(c) a shutter system readily operated either manually, mechanically or electronically by the occupant.

Explanatory Information

A *roof light* should be sealed regardless of which room it serves in *climate zones* 4, 5, 6, 7 and 8. For example, a *roof light* located in a hallway should be sealed to stop the transfer of cold air into adjoining *conditioned spaces*. This principle also applies to external doors and *windows*, exhaust fans, wall and floor junctions and evaporative coolers.

13.4.4 External windows and doors

[2019: 3.12.3.3]

(1) An external door, internal door between a Class 1 building and an unconditioned Class 10a building, openable *window* and other such opening must be sealed when serving—

(a) a *conditioned space*; or

(b) a *habitable room* in *climate zones* 4, 5, 6, 7 and 8.

(2) A seal to restrict air infiltration—

(a) for the bottom edge of a door, must be a draft protection device; and

(b) for the other edges of a door or the edges of an openable *window* or other such opening, may be a foam or rubber compressible strip, fibrous seal or the like.

(3) A *window* complying with the maximum air infiltration rates specified in AS 2047 need not comply with (2)(b).

13.4.5 Exhaust fans

[2019: 3.12.3.4]

An exhaust fan must be fitted with a sealing device such as a self-closing damper, filter or the like when serving—

(a) a *conditioned space*; or

(b) a *habitable room* in *climate zones* 4, 5, 6, 7 and 8.

Explanatory Information

An exhaust fan is considered to be adequately sealed if it is fitted with a filter such as the type commonly used in kitchen range hoods.

13.4.6 Construction of ceilings, walls and floors

[2019: 3.12.3.5]

(1) Ceilings, walls, floors and any opening such as a *window* frame, door frame, *roof light* frame or the like must be constructed to minimise air leakage in accordance with (2) when forming part of the external fabric of—

(a) a *conditioned space*; or

(b) a *habitable room* in *climate zones* 4, 5, 6, 7 and 8.

(2) Construction *required* by (1) must be—

(a) enclosed by internal lining systems that are close fitting at ceiling, wall and floor junctions; or

(b) sealed at junctions and penetrations with—

(i) close-fitting architrave, skirting or cornice; or

(ii) expanding foam, rubber compressive strip, caulking or the like.

Explanatory Information

- A close fitting internal lining system is considered suitable to include an allowance for minimum lining movement

gaps at wall, floor and ceiling junctions.

- Caulking includes sealant, mastic or other gap filling material.
- In 13.4.6(2)(b), penetrations include *windows*, doors, *roof lights* , flues, exhaust fans, heating and cooling ductwork and the like.

13.4.7 Evaporative coolers

[2019: 3.12.3.6]

An evaporative cooler must be fitted with a self-closing damper or the like when serving—

(a) a heated space; or

(b) a *habitable room* in *climate zones* 4, 5, 6, 7 or 8.

Explanatory Information

The self-closing damper should create an effective seal against air infiltration.

Part 13.5 Ceiling fans

NSW Part 13.5
NT Part 13.5
TAS Part 13.5

13.5.1 Application of Part 13.5

[2019: 3.12.4]

(1) This Part applies to a *habitable room* in a Class 1 building.

(2) Part 13.5 must be applied as directed in H6D2(1)(b).

13.5.2 Ceiling fans

[2019: 3.12.4.3]

Ceiling fans must be installed in accordance with Table 13.5.2 in—

(a) *climate zones* 1, 2 and 3; and

(b) *climate zone* 5 in New South Wales and Queensland.

Table 13.5.2: Minimum ceiling fan requirements in climate zones 1, 2, 3 and 5

Size of room (m²)	Minimum number and diameter (mm) of ceiling fans *required* in a bedroom in *climate zones* 1, 2 and 3	Minimum number and diameter (mm) of ceiling fans *required* in a *habitable room* other than a bedroom in *climate zones* 1, 2, 3 and 5 (NSW and Qld)
<15	1 x 900	1 x 900
≥15<20	1 x 1200	1 x 1200
≥20<25	1 x 1200	1 x 1400
≥25<30	1 x 1400	2 x 1200
≥30<45	1 x 1400	2 x 1400
≥45<50	2 x 1400	3 x 1200
≥50	2 x 1400	3 x 1400

Part 13.6 Whole-of-home energy usage

NSW Part 13.6
NT Part 13.6
TAS Part 13.6

13.6.1 Application of Part 13.6

[New for 2022]

(1) This Part applies to—

(a) a Class 1 building; and

(b) a Class 10a building with a *conditioned space*.

(2) Part 13.6 must be applied as directed in H6D2(2).

13.6.2 Net equivalent energy usage

[New for 2022]

(1) The net equivalent energy usage of a building, calculated in accordance with (a), must not exceed the allowance calculated in accordance with (b)—

(a) $(A \times E_E) + E_P + E_S - E_R$, where—

(i) A = the floor area factor obtained by multiplying the total floor area of the building by the adjustment factor in Table 13.6.2a; and

(ii) E_E = the *main space conditioning* and *main water heater* efficiency factor obtained from the ABCB Standard for Whole-of-Home Efficiency Factors; and

(iii) E_P = the swimming pool pump energy usage in (2); and

(iv) E_S = the spa pump energy usage in (3); and

(v) E_R = the installed capacity of on-site photovoltaics (kW); and

(b) $A \times E_F$, where—

(i) A = the floor area factor obtained from multiplying the total floor area of the building by the adjustment factor in Table 13.6.2a; and

(ii) E_F = the energy factor obtained from in Table 13.6.2b.

(2) The swimming pool pump energy usage (E_P) must be determined in accordance with the following formula: $E_P = V \times F_P / 1000$, where—

(a) E_P = the swimming pool pump energy usage; and

(b) V = the volume of the swimming pool to the nearest 1000 litres; and

(c) F_P = the swimming pool pump factor as per Table 13.6.2c.

(3) The spa pump energy usage (E_S) must be determined in accordance with the following formula: $E_S = V \times F_S / 100$, where—

(a) E_S = the spa pump energy usage; and

(b) V = the volume of the spa to the nearest 100 litres; and

(c) F_S = the spa pump factor as per Table 13.6.2d.

Table 13.6.2a: Floor area adjustment factor

Total floor area m²	Floor area factor	Total floor area m²	Floor area factor	Total floor area m²	Floor area factor	Total floor area m²	Floor area factor
<50	0.0123	160–169	0.0097	280–289	0.0087	400–409	0.0080
50–59	0.0119	170–179	0.0096	290–299	0.0086	410–419	0.0079
60–69	0.0116	180–189	0.0095	300–309	0.0085	420–429	0.0079
70–79	0.0113	190–199	0.0094	310–319	0.0085	430–439	0.0078
80–89	0.0111	200–209	0.0093	320–329	0.0084	440–449	0.0078
90–99	0.0108	210–219	0.0092	330–339	0.0083	450–459	0.0077
100–109	0.0106	220–229	0.0091	340–349	0.0083	460–469	0.0077
110–119	0.0105	230–239	0.0090	350–359	0.0082	470–479	0.0077
120–129	0.0103	240–249	0.0090	360–369	0.0082	480–489	0.0076
130–139	0.0101	250–259	0.0089	370–379	0.0081	490–499	0.0076
140–149	0.0100	260–269	0.0088	380–389	0.0081	500	0.0075
150–159	0.0099	270–279	0.0087	390–399	0.0080	—	—

Table Notes

(a) The total floor area is measured within the inside face of the *external walls* of the Class 1 building and includes any conditioned, attached Class 10a building.

(b) Where values fall between ranges given, the floor area must be rounded up to the nearest whole square metres of floor area.

Table 13.6.2b: Energy factor (E_F)

Climate zone	ACT	NSW	NT	Qld	SA	Tas	Vic	WA
1	—	—	1.91	2.77	—	—	—	3.25
2	—	1.32	—	1.78	—	—	—	—
3	—	—	1.23	2.46	—	—	—	2.87
4	—	1.80	—	—	1.86	—	1.25	2.34
5	—	1.75	—	2.28	1.79	—	—	2.35
6	—	2.40	—	—	2.51	—	1.63	3.20
7	2.56	2.33	—	—	—	3.08	1.62	—
8	—	3.99	—	—	—	3.92	2.82	—

Table 13.6.2c: Swimming pool pump factor (F_P) (kW/1000 litres.annum)

Pool pump GEMS star rating	ACT	NSW	NT	Qld	SA	Tas	Vic	WA
1 or unrated	0.056	0.060	0.028	0.046	0.068	0.061	0.049	0.063
1.5	0.048	0.050	0.023	0.039	0.057	0.052	0.041	0.053
2	0.041	0.044	0.020	0.034	0.050	0.045	0.036	0.046
2.5	0.037	0.039	0.018	0.030	0.044	0.040	0.032	0.041
3	0.033	0.035	0.016	0.027	0.039	0.035	0.028	0.036
3.5	0.029	0.031	0.014	0.024	0.035	0.032	0.025	0.033

Pool pump GEMS star rating	ACT	NSW	NT	Qld	SA	Tas	Vic	WA
4	0.026	0.028	0.013	0.021	0.032	0.029	0.023	0.029
4.5	0.024	0.025	0.012	0.019	0.029	0.026	0.021	0.027
5	0.022	0.023	0.011	0.018	0.026	0.023	0.019	0.024
5.5	0.020	0.021	0.010	0.016	0.023	0.021	0.017	0.022
6	0.018	0.019	0.009	0.014	0.021	0.019	0.015	0.020
6.5	0.016	0.017	0.008	0.013	0.019	0.017	0.014	0.018
7	0.014	0.015	0.007	0.012	0.017	0.016	0.012	0.016
7.5	0.013	0.013	0.006	0.010	0.015	0.014	0.011	0.014
8	0.011	0.012	0.006	0.009	0.014	0.012	0.010	0.013
8.5	0.010	0.011	0.005	0.008	0.012	0.011	0.009	0.011
9	0.009	0.009	0.004	0.007	0.011	0.010	0.008	0.010
9.5	0.008	0.008	0.004	0.006	0.009	0.008	0.007	0.009
10	0.007	0.007	0.003	0.005	0.008	0.007	0.006	0.007

Table 13.6.2d: Spa pump factor (F_S) (kW/100 litres.annum)

Spa pump GEMS star rating	ACT	NSW	NT	Qld	SA	Tas	Vic	WA
All types	0.067	0.071	0.033	0.055	0.081	0.073	0.058	0.075

Explanatory Information

The ABCB Standard for Whole-of-Home Efficiency Factors can be accessed at www.abcb.gov.au.

Part 13.7 Services

NT Part 13.7

TAS Part 13.7

NSW 13.7.1

13.7.1 Application of Part 13.7

[2019: 3.12.5]

(1) This Part applies to—

(a) a Class 1 building; and

(b) a Class 10a building; and

(c) a Class 10b *swimming pool* associated with a Class 1 or 10a building.

(2) Part 13.7 must be applied as directed in H6D2(2).

13.7.2 Insulation of services

[2019: 3.12.5.1]

Thermal insulation for central heating water *piping* and heating and cooling ductwork must—

(a) be protected against the effects of weather and sunlight; and

(b) be able to withstand the temperatures within the *piping* or ductwork; and

(c) use thermal insulation material in accordance with AS/NZS 4859.1.

Explanatory Information

The central heating water *piping* provisions apply to systems designed to heat the building via water, such as a hydronic heating system.

13.7.3 Central heating water piping

[2019: 3.12.5.2]

(1) Central heating water *piping* that is not within a *conditioned space* must be thermally insulated to achieve the minimum material *R-Values* as set out in (2) to (6).

(2) Internal *piping* including—

(a) flow and return *piping* that is—

(i) within an unventilated wall space; or

(ii) within an internal floor between storeys; or

(iii) between ceiling insulation and a ceiling; and

(b) heated water piping encased within a concrete floor slab (except that which is part of a floor heating system),

must, in all *climate zones*, have a minimum material *R-Value* of 0.4.

(3) *Piping* located within a ventilated wall space, an enclosed building subfloor or a roof space, including—

(a) flow and return *piping*; and

(b) cold water supply *piping* within 500 mm of the connection to the central water heating system; and

(c) relief valve *piping* within 500 mm of the connection to the central water heating system,

must have a minimum material *R-Value* in accordance with (5).

(4) *Piping* located outside the building or in an unenclosed building subfloor or roof space, including—

(a) flow and return *piping*; and

(b) cold water supply *piping* within 500 mm of the connection to the central water heating system; and

(c) relief valve *piping* within 500 mm of the connection to the central water heating system,

must have a minimum material *R-Value* in accordance with (6).

(5) *Piping* referred to in (3) must have a minimum material *R-Value* of—

(a) in *climate zones* 1, 2, 3 and 5 — 0.6; and

(b) in *climate zones* 4, 6 and 7 — 0.9; and

(c) in *climate zone* 8 — 1.3.

(6) *Piping* referred to in (4) must have a minimum material *R-Value* of—

(a) in *climate zones* 1, 2, 3 and 5 — 0.6; and

(b) in *climate zones* 4, 6 and 7 — 1.3; and

(c) in *climate zone* 8 — 1.3.

Explanatory Information

- The insulation levels in Explanatory Table 13.7.3 are typical examples of materials that can be used to insulate central heating water *piping* calculated in accordance with AS/NZS 4859.1.
- The *R-Value* is that of the insulation and not the *Total R-Value* of the pipe, air film and insulation. Where *piping* has a significant inherent *R-Value* it may be subtracted from the material *R-Value required*. However, the inherent *R-Value* of most piping is not sufficient to satisfy the requirements of 13.7.3.
- *Piping* within a timber member, such as that passing through a wall stud, is considered to have sufficient insulation for the purposes of 13.7.3.
- Explanatory Table 13.7.3 provides examples for the *R-Value* of the insulation used for smaller diameter *piping*.

Table 13.7.3 (explanatory): R-Value of insulation used for smaller diameter piping

Insulation	*R-Value*
9 mm of closed cell polymer	0.4
13 mm of closed cell polymer	0.6
19 mm of closed cell polymer	0.9
25 mm of closed cell polymer	1.3
25 mm of glasswool	1.3

13.7.4 Heating and cooling ductwork

[2019: 3.12.5.3]

(1) Heating and cooling ductwork and fittings must—

(a) achieve the material *R-Value* in (4); and

(b) be sealed against air loss—

(i) by closing all openings in the surface, joints and seams of ductwork with adhesives, mastics, sealants or gaskets in accordance with AS 4254.1 and AS 4254.2 for a Class C seal; or

(ii) for flexible ductwork, with a draw band in conjunction with a sealant or adhesive tape.

(2) Duct insulation must—

(a) abut adjoining duct insulation to form a continuous barrier; and

(b) be installed so that it maintains its position and thickness, other than at flanges and supports; and

(c) where located outside the building, under a suspended floor, in an attached Class 10a building or in a roof

space—

(i) be protected by an outer sleeve of protective sheeting to prevent the insulation becoming damp; and

(ii) have the outer protective sleeve sealed with adhesive tape not less than 48 mm wide creating an airtight and waterproof seal.

(3) The requirements of (1) do not apply to heating and cooling ductwork and fittings located within the insulated building *envelope* including a service riser within the *conditioned space*, internal floors between *storeys* and the like.

(4) The material *R-Value required* by (1)(a) must be determined in accordance with the following:

(a) In a heating-only system or cooling-only system including an evaporative cooling system—

(i) ductwork must have a minimum material *R-Value* of—

(A) in *climate zones* 1 to 7 — 1.0; and

(B) in *climate zone* 8 — 1.5; and

(ii) fittings must have a minimum material *R-Value* of 0.4.

(b) In a combined heating and refrigerated cooling system—

(i) ductwork must have a minimum material *R-Value* of—

(A) in *climate zones* 1, 3, 4, 6 and 7 — 1.5; and

(B) in *climate zones* 2 and 5 — 1.0; and

(C) in *climate zone* 8 — 1.5; and

(ii) fittings must have a minimum material *R-Value* of 0.4.

(c) For the purposes of (b)(i), the minimum material *R-Value required* for ductwork may be reduced by 0.5 for combined heating and refrigerated cooling systems in *climate zones* 1, 3, 4, 6 and 7 if the ducts are—

(i) under a suspended floor with an enclosed perimeter; or

(ii) in a roof space that has an insulation of greater than or equal to R0.5 directly beneath the roofing.

Explanatory Information

- Ductwork within a fully insulated building may still benefit from insulation particularly when the system is only operating for short periods.
- In some *climate zones* condensation may create problems with uninsulated ductwork, in which case insulation should still be considered.
- An enclosed perimeter treatment means that the airspace under the floor is enclosed between ground and floor level by walls which have only the required subfloor vents.
- Insulation for refrigerated cooling ductwork should have a vapour barrier to prevent possible damage by condensation.
- The insulation levels in the Explanatory Tables 13.7.4a, 13.7.4b and 13.7.4c are typical examples of materials that can be used to insulate ductwork and the *R-Values* they contribute. Other methods are available for meeting the minimum material *R-Value required* by 13.7.4(4). These values do not take into account all issues that may reduce the effectiveness of insulation. AS/NZS 4859.1 should be used to confirm in-situ values.
- For fittings, 11 mm polyurethane typically provides an *R-Value* of 0.4.
- Any flexible ductwork used for the transfer of products, initiating from a heat source that contains a flame, must also have the fire hazard properties *required* by H3D2(2).

Table 13.7.4a (explanatory): R-Values for typical ductwork insulation materials – flexible ductwork

Insulating material and thickness	*R-Value*
45 mm glasswool (11 kg/m^3)	1.0
70 mm polyester (6.4 kg/m^3)	1.0
63 mm glasswool (11 kg/m^3)	1.5
90 mm polyester (8.9 kg/m^3)	1.5
85 mm glasswool (11 kg/m^3)	2.0

Table 13.7.4b (explanatory): R-Value for typical ductwork insulation materials – sheetmetal ductwork – external insulation

Insulating material and thickness	*R-Value*
38 mm glasswool (22 kg/m^3)	1.0
50 mm polyester (20 kg/m^3)	1.1
50 mm glasswool (22 kg/m^3)	1.5
75 mm polyester (20 kg/m^3)	1.7

Table 13.7.4c (explanatory): R-Values for typical ductwork insulation materials – sheetmetal ductwork – internal insulation

Insulating material and thickness	*R-Value*
38 mm glasswool (32 kg/m^3)	1.0
50 mm polyester (32 kg/m^3)	1.3
50 mm glasswool (32 kg/m^3)	1.5

NSW 13.7.5

13.7.5 Electric resistance space heating

[2019: 3.12.5.4]

An electric resistance space heating system that serves more than one room must have—

(a) separate isolating switches for each room; and

(b) a separate temperature controller and time switch for each group of rooms with common heating needs; and

(c) power loads of not more than 110 W/m^2 for living areas, and 150 W/m^2 for bathrooms.

NSW 13.7.6

13.7.6 Artificial lighting

[2019: 3.12.5.5]

(1) The *lamp power density* or *illumination power density* of artificial lighting, excluding heaters that emit light, must not exceed the allowance of—

(a) 5 W/m^2 in a Class 1 building; and

(b) 4 W/m^2 on a verandah, balcony or the like attached to a Class 1 building; and

(c) 3 W/m^2 in a Class 10a building associated with a Class 1 building.

(2) The *illumination power density* allowance in (1) may be increased by dividing it by the relevant *illumination power density* adjustment factor for a control device in (6) as applicable.

(3) When designing the *lamp power density* or *illumination power density*, the power of the proposed installation must be used rather than nominal allowances for exposed batten holders or luminaires.

(4) If halogen lamps are installed, they must be separately switched from fluorescent lamps.

(5) Artificial lighting around the perimeter of a building must—

(a) be controlled by a daylight sensor; or

(b) have an average light source efficacy of not less than 40 Lumens/W.

(6) The following *illumination power density* adjustment factors apply to control devices for artificial lighting:

(a) Lighting timer for corridor lighting: 0.7.

(b) Motion detector —

(i) 0.9, where —

(A) at least 75% of the area of a space is controlled by one or more motion detectors; or

(B) an area of less than 200 m^2 is switched as a block by one or more motion detectors; and

(i) 0.7, where up to 6 lights are switched as a block by one or more detectors; and

(ii) 0.55, where up to 2 lights are switched as a block by one or more detectors.

(c) Manual dimming system where not less than 75% of the area of a space is controlled by manually operated dimmers: 0.85.

(d) Programmable dimming system where not less than 75% of the area of a space is controlled by programmable dimmers: 0.85.

(e) Dynamic dimming system, with automatic compensation for lumen depreciation, the design lumen depreciation factor is not less than —

(i) 0.9 for fluorescent lights; or

(ii) 0.8 for high pressure discharge lights.

(f) Fixed dimming where at least 75% of the area is controlled by fixed dimmers that reduce the overall lighting level and the power consumption of the lighting — equal to the % of full power to which the dimmer is set divided by 0.95.

(g) Daylight sensor and dynamic lighting control device, with dimmed or stepped switching of lights adjacent to *windows*:

(i) Lights within the space adjacent to *windows* other than *roof lights* for a distance from the *window* equal to the depth of the floor at *window* head height: 0.5.

(ii) Lights within the space adjacent to *roof lights*: 0.6.

(7) For the purposes of (6)(c), manual dimming is where lights are controlled by a knob, slider or other mechanism or where there are pre-selected scenes that are manually selected.

(8) For the purposes of (6)(d), programmed dimming is where pre-selected scenes or levels are automatically selected by the time of day, photoelectric cell or occupancy sensor.

(9) For the purposes of (6)(e), dynamic dimming is where the lighting level is varied automatically by a photoelectric cell to either proportionately compensate for the availability of daylight or the lumen depreciation of the lamps.

(10) For the purposes of (6)(f), fixed dimming is where lights are controlled to a level and that level cannot be adjusted by the user.

(11) For the purposes of (6)(g)(i) and (ii), the *illumination power density* adjustment factor is only applied to lights controlled by that item — this adjustment factor does not apply to tungsten halogen or other incandescent sources.

Explanatory Information

- There are two approaches available for achieving compliance with (1) in Class 1 and associated Class 10a buildings. These are through the determination of the *lamp power density* or the *illumination power density*.
- The first step in achieving compliance is to determine the relevant *lamp power density* or *illumination power density* allowance. Generally, the *lamp power density* or *illumination power density* is the relevant value in (1)(a), (b) or (c), however the *illumination power density* allowance can be increased in accordance with (2) if a control device is used.
- When *illumination power density* and one or more control devices are used, the adjustment factor is only applied to the space(s) served by the control device. The adjusted allowance for this space is then combined with the allowances for the remaining spaces using an area weighted average, which subsequently increases the allowance provided in (1)(a), (b) or (c).
- Where no control device is used the adjustment factor is equal to 1.
- The second step in achieving compliance is to assess the overall *lamp power density* or overall *illumination power density* of the building.
- The overall *lamp power density* is calculated by adding the maximum power ratings of all of the permanently wired lamps in a space and dividing this sum by the area of the space.
- The overall *illumination power density* is calculated by adding the illumination power load for each space and dividing this sum by the area of the space.

- Control device factors in (2) are only applied to the *illumination power density*, not the overall *illumination power density*.
- To comply with (1), the overall *lamp power density* or overall *illumination power density* must be less than or equal to the allowance.
- Trading of allowances between (1)(a), (b) and (c) is not permitted.
- (1)(b) includes outdoor living spaces such as verandahs, balconies, patios, alfresco spaces or the like that are attached to a Class 1 building.
- The artificial lighting requirements in 13.7.6 are to be read in conjunction with the artificial lighting requirements in 10.5.2.
- The artificial lighting around the perimeter of a building does not need to comply to a maximum power density as neither the lighting required or the area of the space can be easily defined. Instead, external lights are required to be controlled by daylight sensors or to be efficient.
- In (4), separate switching is required for halogen lamps to facilitate less frequent usage. This is because they are significantly less energy efficient that fluorescent lamps.

NSW 13.7.7

13.7.7 Water heater in a heated water supply system

[2019: 3.12.5.6]

A water heater in a heated water supply system must be designed and installed in accordance with Part B2 of NCC Volume Three — Plumbing Code of Australia.

NSW 13.7.8

13.7.8 Swimming pool heating and pumping

[2019: 3.12.5.7]

(1) Heating for a *swimming pool* must be by—
  (a) a solar heater not boosted by electric resistance heating; or
  (b) a heater using reclaimed energy; or
  (c) a gas heater; or
  (d) a heat pump; or
  (e) a combination of (a) to (d).

(2) Where some or all of the heating *required* by (1) is by a gas heater or a heat pump, the *swimming pool* must have—
  (a) a cover with a minimum *R-Value* of 0.05, unless located in a *conditioned space*; and
  (b) a time switch to control the operation of the heater.

(3) A time switch must be provided to control the operation of a circulation pump for a *swimming pool*.

(4) For the purposes of 13.7.8, a *swimming pool* does not include a spa pool.

NSW 13.7.9

13.7.9 Spa pool heating and pumping

[2019: 3.12.5.8]

(1) Heating for a spa pool that shares a water recirculation system with a *swimming pool* must be by—
  (a) a solar heater; or
  (b) a heater using reclaimed energy; or
  (c) a gas heater; or

(d) a heat pump; or

(e) a combination of (a) to (d).

(2) Where some or all of the heating *required* by (1) is by a gas heater or a heat pump, the spa pool must have—

(a) a cover; and

(b) a push button and a time switch to control the operation of the heater.

(3) A time switch must be provided to control the operation of a circulation pump for a spa pool having a capacity of 680 L or more.

Schedule 1 Definitions

Abbreviations

Symbols

Glossary

Abbreviations

Abbreviation	Definitions
ABCB	Australian Building Codes Board
AC	Alternating Current
ACC	Acrylic conformal coating
ACL	Acrylic latex
ACP	Aluminium Composite Panel
AIRAH	Australian Institute of Refrigeration, Air conditioning and Heating
ANSI	American National Standards Institute
AS	Australian Standard
ASET	Available Safe Egress Time
ASHRAE	American Society of Heating, Refrigerating and Air Conditioning Engineers
ASTM	American Society for Testing and Materials
BAL	Bushfire Attack Level
BCA	Building Code of Australia
BE	Fire blocks evacuation route
CAN	National Standard of Canada
CCT	Correlated Colour Temperature
CF	Challenging fire
CHF	Critical Heat Flux
CIBSE	Chartered Institution of Building Services Engineers
CRF	Critical Radiant Flux
CRI	Colour Rendering Index
CS	Fire starts in a concealed space
C_{SHGC}	Constant for solar heat gain
CSIRO	Commonwealth Scientific and Industrial Research Organisation
C_U	Constant for conductance
DC	Direct Current
FED	Fractional Effective Dose
FI	Fire brigade intervention
FRL	Fire Resistance Level
FZ	Flame Zone
GEMS	Greenhouse and Energy Minimum Standards
GRP	Glass fibre reinforced polyester
HDG	Hot dip galvanising
HRR	Heat Release Rate
HS	Horizontal fire spread
IS	Rapid fire spread involving internal surface linings
ISO	International Organisation for Standardisation
IZS	Inorganic zinc silicate
LED	Light-Emitting Diode
MEPS	Minimum Energy Performance Standards

Abbreviation	Definitions
NABERS	National Australian Built Environment Rating System
NASH	National Association of Steel-Framed Housing
NATA	National Association of Testing Authorities Australia
NatHERS	Nationwide House Energy Rating Scheme
NCC	National Construction Code
NSF	National Sanitation Foundation
PBDB	Performance-based design brief
PCA	Plumbing Code of Australia
PMV	Predicted Mean Vote
ppm	parts per million
PUR	Polyurethane
PVC	Polyvinyl chloride
RC	Robustness check
RSET	Required Safe Egress Time
R_W	Weighted sound reduction index
SF	Smouldering fire
SHGC	Solar Heat Gain Coefficient
SL	Square mesh
SS	Structural stability and other property
STC	Sound Transmission Class
TM	Trench mesh
UF	Unexpected catastrophic failure
UPVC	Unplasticized polyvinyl chloride
UT	Fire in normally unoccupied room threatening occupants of other rooms
U-Value	Thermal transmittance
VS	Vertical fire spread involving external cladding or external openings
WC	Water closet

Symbols

Symbols	Definitions
°	degree(s)
°C	degree(s) Celsius
°CDB	degree(s) Celsius Dry Bulb
°CWB	degree(s) Celsius Wet Bulb
-e/MJ	equivalent per Megajoule(s)
µm	micrometre
µg/N.s	Micrograms per newton-second
dB(A)	decibels “A” scale weighting network
f’c	Characteristic compressive strength of concrete at 28 days
f’y	Yield stress used in design
G	Permanent load
J	Joule(s)
J/kg.K	Joules per kilogram degree Kelvin
J/s.m^2	Joules per second square metre
K	Kelvin(s)
kg	kilogram(s)
kg/m	kilogram(s) per metre
kg/m^2	kilogram(s) per square metre
kg/m^3	kilogram(s) per cubic metre
kJ/m^2.hour	kilojoules per square metre hour
km	kilometre(s)
kPa	kilopascal(s)
kW/m^2	kilowatt(s) per square metre
kW$_{heating}$	kilowatt(s) of heating
kWr	kilowatt(s) of refrigeration
L	litre(s)
L/min	litre(s) per minute
L/s	litre(s) per second
L/s.m^2	litre(s) per second square metre
Lumens/W	Lumens per Watt
lx	lux
m	metre(s)
m/s	metre(s) per second
m^2	square metre(s)
m^2.K/W	square metre Kelvin(s) per Watt
m^3	cubic metre(s)
m^3/hour	cubic metre(s) per hour
m^3/s	cubic metre(s) per second
mcd/m^2	millicandelas per square metre
min	minute(s)

Symbols	Definitions
MJ/hour	Megajoules per hour
MJ/m^2.annum	Megajoules per square metre annum
mm	millimetre(s)
mm^2	square millimetre(s)
MW	megawatt(s)
N	newton(s)
N/m	Newton(s) per metre
Pa	pascal(s)
Pa/m	pascal(s) per metre
Q	Imposed load
s	second(s)
ULS	Ultimate limit state
V	Volt(s)
W	Watt(s)
$W_{input\ power}$	Watts of input power
$Wr/W_{input\ power}$	Watts of thermal refrigeration per watt of input power
W/kW_{rej}	Watts per kilowatt of heat rejected
$Wm^{-1}K^{-1}$	Watts per metre degree Kelvin
W/m^2	Watts per square metre
°south	degree south
%	percent
>	greater than
<	less than
≤	less than or equal to
≥	equal to or more than

Glossary

Above ground rainwater tank: A rainwater tank that is not in any way set into the ground.

Accessible: Having features to enable use by people with a disability.

Accessway: A continuous *accessible* path of travel (as defined in AS 1428.1) to, into or within a building.

Accredited Testing Laboratory: One of the following:

(a) An organisation accredited by the National Association of Testing Authorities Australia (NATA) to undertake the relevant tests.

(b) An organisation outside Australia accredited to undertake the relevant tests by an authority recognised by NATA through a mutual recognition agreement.

(c) An organisation recognised as being an Accredited Testing Laboratory under legislation at the time the test was undertaken.

Activity support level: The degree to which occupants can undertake activities with respect to the likely *activity traits* and *occupant traits*.

Explanatory Information

This term is used to articulate whether the height of a room or space is sufficient and by what degree. This is achieved by having regard to the room or space's intended use by occupants, through consideration of the defined terms '*activity traits*' and '*occupant traits*'.

Activity traits: For the purposes of—

(a) Volume One, the features of the activities that will be undertaken in a *habitable room* or space; or

(b) Volume Two, the features of the activities that will be undertaken in a room or space.

Explanatory Information

This term is used to describe the characteristics of the activities that will be undertaken in a room or space.

For example, the activities likely to be undertaken in a bedroom, and the associated features are—

- sleeping — a person laying horizontally; and
- resting — a person laying horizontally or sitting upright on the bed; and
- leisure activities, such as reading a book — a person sitting upright on the bed, with enough space to stretch their arms vertically; and
- dressing/changing clothes — a person standing with enough space to stretch their arms vertically.

Administering body: The body responsible for administering the *WaterMark Certification Scheme*.

Aged care building: A Class 9c building for residential accommodation of aged persons who, due to varying degrees of incapacity associated with the ageing process, are provided with *personal care services* and 24 hour staff assistance to evacuate the building during an emergency.

NSW Aisle

SA Agriculture

Air-conditioning: For the purposes of Section J of Volume One, a *service* that actively cools or heats the air within a space, but does not include a *service* that directly—

(a) cools or heats cold or hot rooms; or

(b) maintains specialised conditions for equipment or processes, where this is the main purpose of the *service*.

Alarm zone: For the purposes of Specification 23, an area of a building protected by one or more smoke alarms connected to one alarm circuit.

Alpine area: An area given in Figure 1 and in Table 1 for specific locations, and is—

(a) likely to be subject to significant snowfalls; and

(b) in New South Wales, the ACT or Victoria more than 1200 m above the Australian Height Datum; and

(c) in Tasmania more than 900 m above the Australian Height Datum.

Table 1: Alpine areas where snow loads are significant

Location	Map identifier
Kiandra (NSW)	1
Mount Kosciuszko (NSW)	2
Perisher Valley (NSW)	3
Thredbo (NSW)	4
Cabramurra (NSW)	5
Charlotte Pass Village (NSW)	6
Diggers Creek (NSW)	7
Guthega Village (NSW)	8
Mount Blue Cow (NSW)	9
Mount Selwyn (NSW)	10
Perisher Range (NSW)	11
Rules Point (NSW)	12
Sawpit Creek (NSW)	13
Smiggin Holes (NSW)	14
Smiggin Range (NSW)	15
Three Mile Dam (NSW)	16
Wilsons Valley (NSW)	17
Falls Creek (Vic.), including Summit Area, Sun Valley and Village Bowl	18
Mount Baw Baw (Vic.)	19
Mount Buffalo (Vic.), including Chalet, Dingo Dell and Tatra	20
Mount Buller (Vic.), including Baldy and Village	21
Mount Hotham (Vic.), including Davenport and Village Centre	22
Dinner Plain (Vic.)	23
Lake Mountain (Vic.)	24
Mount Stirling (Vic.)	25
Ben Lomond Ski Field (Tas.)	26
Cradle Valley (Tas.)	27
Great Lake Area (Tas.)	28
Mount Field Ski Field (Tas.)	29

Figure 1: Alpine areas

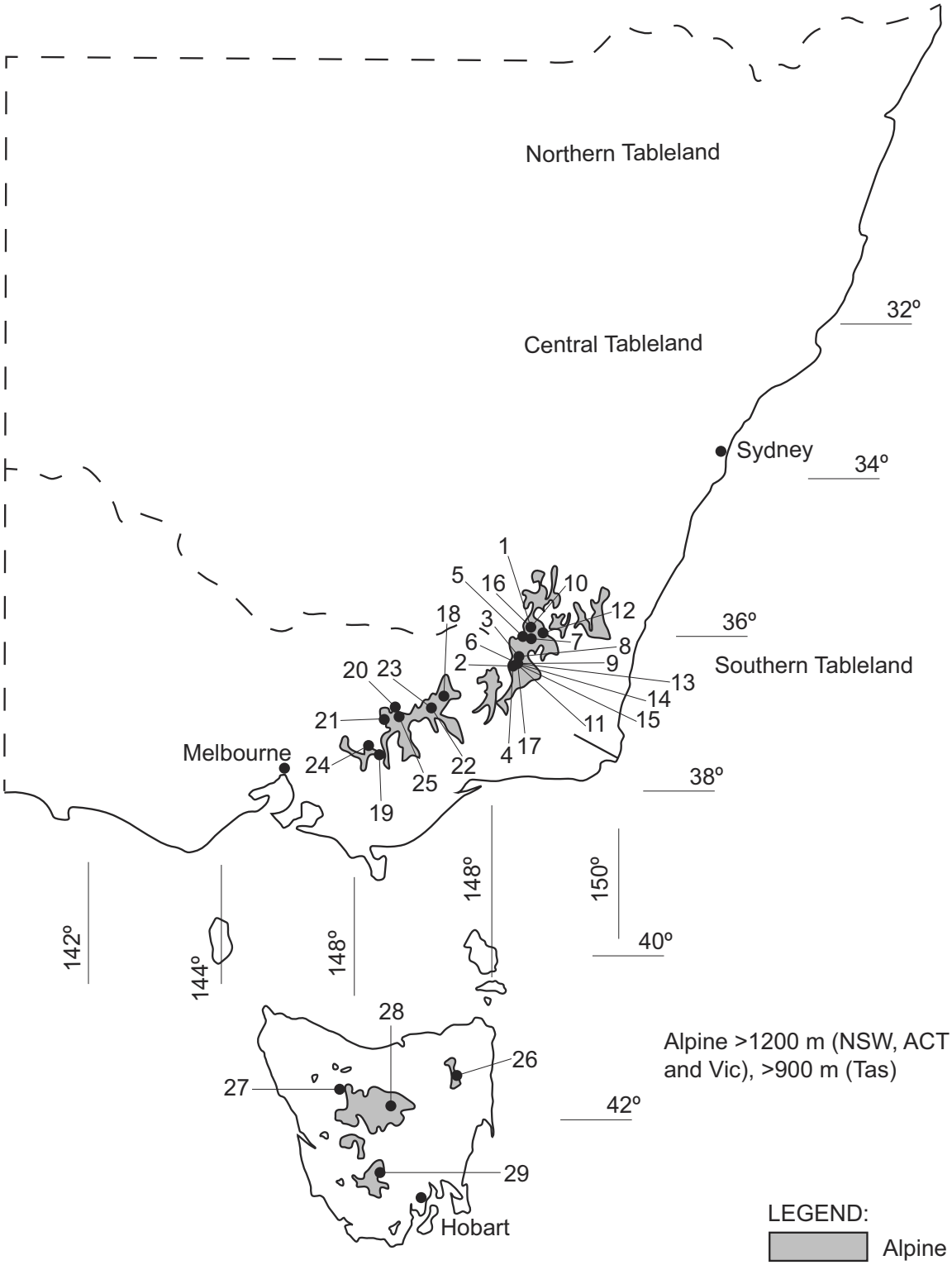

Figure Notes

This map is approximate only and altitude above Australian Height Datum must be used to determine whether the building falls into an *alpine area* region.

Explanatory Information

Alpine areas are located in New South Wales, Victoria and Tasmania.

Alpine areas are areas 1200 m or more above Australian Height Datum (AHD) for New South Wales, Australian Capital Territory and Victoria, and 900 m or more above AHD for Tasmania, as shown in Figure 1.

Alpine areas are considered to receive significant snowfalls (snowfalls that result in an average snow accumulation on

the ground of 175 mm or greater). Regions in New South Wales, the Australian Capital Territory and Victoria between 600 – 1200 m AHD are considered to be sub-alpine areas and may receive significant snowfalls, however unlike alpine areas the snow is unlikely to accumulate.

It is recommended that the *appropriate authority* be consulted to determine whether the building is located in an alpine area. AS/NZS 1170.3 also contains further detail in the identification of alpine areas and the altitude of the alpine regions of Australia.

In the Australian Capital Territory, Canberra is not designated as an alpine area as snow loads are not considered significant.

Alteration: In relation to a building, includes an addition or extension to a building.

Aluminium Composite Panel (ACP): Flat or profiled aluminium sheet material in composite with any type of materials.

Amenity: An attribute which contributes to the health, physical independence, comfort and well-being of people.

Ancillary element: An element that is secondary to and not an integral part of another element to which it is attached.

Annual exceedance probability: The probability that a given rainfall total accumulated over a given duration will be exceeded in any one year.

Annual greenhouse gas emissions: The theoretical amount of greenhouse gas emissions attributable to the energy used annually by a building's *services*, excluding kitchen exhaust and the like.

Appropriate authority: For the purposes of the Fire Safety Verification Method, means the relevant authority with the statutory responsibility to determine the particular matter satisfies the relevant *Performance Requirement*.

Explanatory Information

The *Appropriate Authority* is typically the building surveyor or building certifier charged with the statutory responsibility to determine building compliance and issue the building permit / approval and occupancy certificate / approval.

NSW Appropriate authority

Appropriate authority: The relevant authority with the statutory responsibility to determine the particular matter.

Appropriately qualified person: A person recognised by the *appropriate authority* as having qualifications and/or experience in the relevant discipline in question.

Approved disposal system: A system for the disposal of sewage, sullage or stormwater approved by an authority having jurisdiction.

Articulated masonry: Masonry construction in which special provisions have been made for movement by articulation.

NSW Assembly building

SA Assembly building

Assembly building: A building where people may assemble for—

(a) civic, theatrical, social, political or religious purposes including a library, theatre, public hall or place of worship; or

(b) educational purposes in a *school*, *early childhood centre*, preschool, or the like; or

(c) entertainment, recreational or sporting purposes including—

(i) a discotheque, nightclub or a bar area of a hotel or motel providing live entertainment or containing a dance floor; or

(ii) a cinema; or

(iii) a sports stadium, sporting or other club; or

(d) transit purposes including a bus station, railway station, airport or ferry terminal.

Assessment Method: A method that can be used for determining that a *Performance Solution* or *Deemed-to-Satisfy Solution* complies with the *Performance Requirements*.

Assumed cooling thermostat set point: The cooling thermostat set point used to calculate *cooling degree hours*, and equal to $17.8 + 0.31T_m$, where T_m is the mean January outdoor air temperature measured in degrees Celsius.

Atrium: A space within a building that connects 2 or more *storeys* and—

(a) is enclosed at the top by a floor or roof (including a glazed roof structure); and

(b) includes any adjacent part of the building not separated by an appropriate barrier to fire; but

(c) does not include a stairwell, rampwell or the space within a *shaft*; and

(d) for the purposes of (a) a space is considered enclosed if the area of the enclosing floor or roof is greater than 50% of the area of the space, measured in plan, of any of the *storeys* connected by the space.

Atrium well: A space in an *atrium* bounded by the perimeter of the openings in the floors or by the perimeter of the floors and the *external walls*.

NSW Auditorium

Automatic: Designed to operate when activated by a heat, smoke or fire sensing device.

Available safe egress time (ASET)

(1) The time between ignition of a fire and the onset of untenable conditions in a specific part of a building.

(2) The time referred to in (1) is the calculated interval between the time of ignition of a fire and the time at which conditions become such that the occupant is unable to take effective action to escape to a place of safety.

Average daylight factor: The ratio of the illumination level within a room provided by daylight to the level of daylight outside the building during overcast conditions.

Average specific extinction area: The average specific extinction area for smoke as determined by AS 5637.1.

Backflow prevention device: An air gap, break tank or mechanical device that is designed to prevent the unplanned reversal of flow of water or *contaminants* into the water service or a *Network Utility Operator's* water supply.

Backpressure: A reversal of water flow caused by the downstream pressure becoming greater than the supply pressure.

Backsiphonage: A reversal of flow of water caused by negative pressure in the distributing pipes of a water service or supply.

Backstage: A space associated with, and adjacent to, a *stage* in a Class 9b building for scenery, props, equipment, dressing rooms, or the like.

Battery system: One or more chemical cells connected in series, parallel or a combination of the two for the purpose of electrical energy storage.

Blockage: An obstruction within a water service or sanitary *plumbing* or *drainage* system.

Boiler: A vessel or an arrangement of vessels and interconnecting parts, wherein steam or other vapour is generated, or water or other liquid is heated at a pressure above that of the atmosphere, by the application of fire, the products of combustion, electrical power, or similar high temperature means, and—

(a) includes superheaters, reheaters, economisers, boiler piping, supports, mountings, valves, gauges, fittings, controls, the boiler settings and directly associated equipment; but

(b) excludes a fully flooded or pressurised system where water or other liquid is heated to a temperature lower than the normal atmospheric boiling temperature of the liquid.

Bond breaker: A material used as part of a *waterproofing system* that prevents the *membrane* bonding to the substrate, bedding or lining.

Breaking surf: Any area of salt water in which waves break on an average of at least 4 days per week but does not include white caps or choppy water.

Explanatory Information

Breaking surf normally occurs in areas exposed to the open sea. Breaking surf does not normally occur in sheltered areas, such as that which occurs around Port Phillip Bay, Sydney Harbour, Swan River, Derwent River and similar locations.

Building complexity criteria: Are used to determine the building complexity level of all or part of a building in accordance with Table 2, where building complexity criteria are as follows:

(a) Attributes — the building is designed or constructed with any of the following sub-criteria:

(i) An *effective height* of more than 25 m.

(ii) One or more *Performance Solutions* are used to demonstrate compliance with the *Performance Requirements* relating to material and systems for structural safety.

(iii) One or more *Performance Solutions* are used to demonstrate compliance with the *Performance Requirements* relating to material and systems for fire safety.

(iv) Is located in an area prone to natural disaster or adverse environmental conditions.

(b) Class 2 — all or part of the building is Class 2 of three or more *storeys*.

(c) Occupant numbers — the building is to be occupied by more than 100 people determined in accordance with D2D18.

(d) Occupant characteristics — the building is to be occupied by more than 10 people who will require assistance to evacuate the building in an emergency.

(e) Importance Level — the building is determined to be Importance Level 4 or 5.

Notes

The NCC currently does not include corresponding technical requirements relating to the defined term 'building complexity criteria' and the various building complexity levels. It is intended that these terms will be integrated into future editions of the NCC.

Table 2: Building complexity level

Building complexity level	Criteria
Low	The building meets only one of the following *building complexity criteria*: (a) (Attributes), (b) (Class 2), (c) (Occupant numbers) or (d) (Occupant characteristics)
Medium	The building meets two of the following *building complexity criteria*: (a) (Attributes), (b) (Class 2), (c) (Occupant numbers) or (d) (Occupant characteristics)
High	The building meets three of the following *building complexity criteria*: (a) (Attributes), (b) (Class 2), (c) (Occupant numbers) or (d) (Occupant characteristics)
Very high	The building meets all of the following *building complexity criteria*: (a) (Attributes), (b) (Class 2), (c) (Occupant numbers) and (d) (Occupant characteristics); or (e) (Building Importance Level 4 or 5)

Buried rainwater tank: A rainwater tank that is set into and completely covered by earth.

Burnout: Exposure to fire for a time that includes *fire growth*, full development, and decay in the absence of intervention or automatic suppression, beyond which the fire is no longer a threat to building elements intended to perform *loadbearing* or fire separation functions, or both.

SA Brush fence

SA Bulk grain storage facility

Carpark: A building that is used for the parking of motor vehicles but is neither a *private garage* nor used for the servicing of vehicles, other than washing, cleaning or polishing.

Cavity: A void between 2 leaves of masonry, or in masonry veneer construction, a void between a leaf of masonry and the supporting frame.

Cavity wall: For the purposes of F3V1 and H2V1, a wall that incorporates a drained cavity.

SA Cell type silo

TAS Centre-based care class 4 facility

TAS Centre-based care class 5 facility

Certificate of Accreditation: A certificate issued by a State or Territory accreditation authority stating that the properties and performance of a building material or method of construction or design fulfil specific requirements of the NCC.

Certificate of Conformity: A certificate issued under the ABCB scheme for products and systems certification stating that the properties and performance of a building material or method of construction or design fulfil specific requirements of the NCC.

Certification body: A person or organisation operating in the field of material, product, form of construction or design

certification that has been accredited by the Joint Accreditation System of Australia and New Zealand (JAS-ANZ), and is accredited for a purpose other than as part of the CodeMark Australia Certification Scheme or *WaterMark Certification Scheme*.

Characteristic: The occupant data to be used in the modelling of access solutions which define how an occupant interacts with a building, i.e. occupant movement speeds, turning ability, reach capability, perception of luminance contrast and hearing threshold.

VIC Children's service

Clad frame: Timber or metal frame construction with exterior timber or sheet wall cladding that is not sensitive to minor movement and includes substructure masonry walls up to 1.5 m high.

Climate zone: An area defined in Figure 2 and in Table 3 for specific locations, having energy efficiency provisions based on a range of similar climatic characteristics.

Table 3: Climate zones for thermal design

State	Location	*Climate zone*
ACT	Canberra	7
NSW	Albury	4
NSW	Armidale	7
NSW	Batemans Bay	6
NSW	Bathurst	7
NSW	Bega	6
NSW	Bellingen Shire - Dorrigo Plateau	7
NSW	Bellingen Shire - Valley & seaboard	2
NSW	Bourke	4
NSW	Broken Hill	4
NSW	Byron Bay	2
NSW	Cobar	4
NSW	Coffs Harbour	2
NSW	Dubbo	4
NSW	Goulburn	7
NSW	Grafton	2
NSW	Griffith	4
NSW	Ivanhoe	4
NSW	Lismore	2
NSW	Lord Howe Island	2
NSW	Moree	4
NSW	Newcastle	5
NSW	Nowra	6
NSW	Orange	7
NSW	Perisher - Smiggins	8
NSW	Port Macquarie	5
NSW	Sydney East	5
NSW	Sydney West	6
NSW	Tamworth	4
NSW	Thredbo	8
NSW	Wagga Wagga	4
NSW	Williamtown	5

State	Location	*Climate zone*
NSW	Wollongong	5
NSW	Yass	6
NT	Alice Springs	3
NT	Darwin	1
NT	Elliot	3
NT	Katherine	1
NT	Renner Springs	3
NT	Tennant Creek	3
QLD	Birdsville	3
QLD	Brisbane	2
QLD	Bundaberg	2
QLD	Cairns	1
QLD	Cooktown	1
QLD	Cunnamulla	3
QLD	Gladstone	2
QLD	Hervey Bay	2
QLD	Hughenden	3
QLD	Longreach	3
QLD	Mackay	2
QLD	Mount Isa	3
QLD	Normanton	1
QLD	Rockhampton	2
QLD	Roma	3
QLD	Southport	2
QLD	Toowoomba	5
QLD	Townsville	1
QLD	Warwick	5
QLD	Weipa	1
SA	Adelaide	5
SA	Bordertown	6
SA	Ceduna	5
SA	Cook	4
SA	Elliston	5
SA	Kingscote	6
SA	Leigh Creek	5
SA	Lobethal	6
SA	Loxton	5
SA	Naracoorte	6
SA	Marree	4
SA	Mount Gambier	6
SA	Murray Bridge	6
SA	Oodnadatta	4
SA	Port Augusta	4
SA	Port Lincoln	5

State	Location	*Climate zone*
SA	Renmark	5
SA	Tarcoola	4
SA	Victor Harbour	6
SA	Whyalla	4
TAS	Burnie	7
TAS	Bicheno	7
TAS	Deloraine	7
TAS	Devonport	7
TAS	Flinders Island	7
TAS	Hobart	7
TAS	Huonville	7
TAS	King Island	7
TAS	Launceston	7
TAS	New Norfolk	7
TAS	Oatlands	7
TAS	Orford	7
TAS	Rossarden	7
TAS	Smithton	7
TAS	St Marys	7
TAS	Zeehan	7
VIC	Anglesea	6
VIC	Ararat	7
VIC	Bairnsdale	6
VIC	Ballarat	7
VIC	Benalla	6
VIC	Bendigo	6
VIC	Bright	7
VIC	Colac	6
VIC	Dandenong	6
VIC	Echuca	4
VIC	Geelong	6
VIC	Hamilton	7
VIC	Horsham	6
VIC	Melbourne	6
VIC	Mildura	4
VIC	Portland	6
VIC	Sale	6
VIC	Shepparton	4
VIC	Swan Hill	4
VIC	Traralgon	6
VIC	Wangaratta	7
VIC	Warrnambool	6
VIC	Wodonga	6
WA	Albany	6

State	Location	*Climate zone*
WA	Balladonia	4
WA	Broome	1
WA	Bunbury	5
WA	Carnarvon	3
WA	Christmas Island	1
WA	Cocos Island	1
WA	Derby	1
WA	Esperance	5
WA	Exmouth	1
WA	Geraldton	5
WA	Halls Creek	3
WA	Kalgoorlie-Boulder	4
WA	Karratha	1
WA	Meekatharra	4
WA	Northam	4
WA	Pemberton	6
WA	Perth	5
WA	Port Hedland	1
WA	Wagin	4
WA	Wyndham	1

Figure 2: **Climate zones for thermal design**

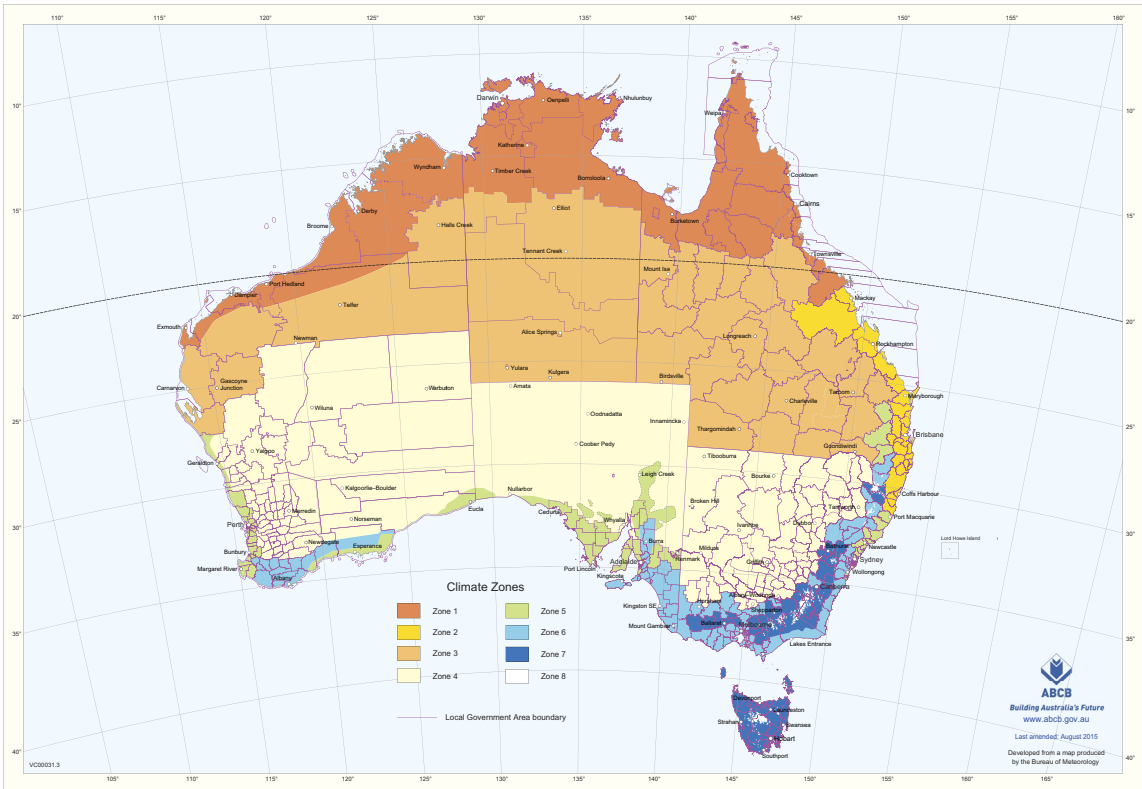

Figure Notes

(1) This map can be viewed in enlargeable form on the ABCB website at abcb.gov.au.

(2) A Zone 4 area in South Australia, other than a council area, at an altitude greater than 300 m above the

Australian Height Datum is to be considered as Zone 5.

(3) The areas referred to in (2) have been defined in an enlarged format on the following maps produced by the Department of Planning, Transport and Infrastructure (these maps can be viewed on the Government of South Australia website at www.sa.gov.au):

(a) Adelaide Hills Climate Zone Map.

(b) Barossa Council Climate Zone Map.

(c) Regional Council of Goyder Climate Zone Map.

(4) Locations in *climate zone* 8 are in *alpine areas*.

Combustible: Applied to—

(a) a material — means combustible as determined by AS 1530.1; and

(b) construction or part of a building — means constructed wholly or in part of combustible materials.

VIC Combustible cladding product

Common wall: For the purposes of—

(a) Volume One, a wall that is common to adjoining buildings.

(b) Volume Two and the ABCB Housing Provisions, a wall that is common to adjoining buildings other than Class 1 buildings.

Condensation: The formation of moisture on the surface of a building element or material as a result of moist air coming into contact with a surface which is at a lower temperature.

Conditioned space: For the purposes of—

(a) Volume One, a space within a building, including a ceiling or under-floor supply air plenum or return air plenum, where the environment is likely, by the intended use of the space, to have its temperature controlled by *air-conditioning*; or

(b) Volume Two, a space within a building that is heated or cooled by the building's *domestic services*, excluding a non-*habitable room* in which a heater with a capacity of not more than 1.2 kW or 4.3 MJ/hour is installed.

Construction activity actions: Actions due to stacking of building materials or the use of equipment, including cranes and trucks, during construction or actions which may be induced by floor to floor propping.

Containment protection: The installation of a *backflow prevention device* at the *point of connection* of a *Network Utility Operator's* water supply to a site.

Contaminant: Any substance (including gases, liquids, solids or micro-organisms), energy (excluding noise) or heat, that either by itself or in combination with the same, similar or other substances, energy or heat, changes or is likely to change the physical, chemical or biological condition of water.

NSW Continental seating

Controlled fill: Material that has been placed and compacted in layers with compaction equipment (such as a vibrating plate) within a defined moisture range to a defined density requirement.

Cooling degree hours: For any one hour when the mean outdoor air temperature is above the *assumed cooling thermostat set point*, the degree Celsius air temperature difference between the mean outdoor air temperature and the *assumed cooling thermostat set point*.

Cooling load: The calculated amount of energy removed from the cooled spaces of the building annually by artificial means to maintain the desired temperatures in those spaces.

Critical radiant flux (CRF): The critical heat flux at extinguishment (CHF in kW/m^2) as determined by AS ISO 9239.1.

Cross-connection: Any actual or potential connection between a water supply and any *contaminant*.

NSW Cross-over

Curtain wall: A non-*loadbearing external wall* that is not a *panel wall*.

Daily outdoor temperature range: The difference between the maximum and minimum temperatures that occur in a day.

Damp-proof course (DPC): A continuous layer of impervious material placed in a masonry wall or pier, or between a wall or pier and a floor, to prevent the upward or downward migration of water.

Deemed-to-Satisfy Provisions: Provisions which are deemed to satisfy the *Performance Requirements*.

Deemed-to-Satisfy Solution: A method of satisfying the *Deemed-to-Satisfy Provisions*.

Defined flood event (DFE): The flood event selected for the management of flood hazard for the location of specific development as determined by the *appropriate authority*.

Defined flood level (DFL): The flood level associated with a *defined flood event* relative to a specified datum (see Figure 3).

Figure 3: Identification of defined flood level, flood hazard level and freeboard

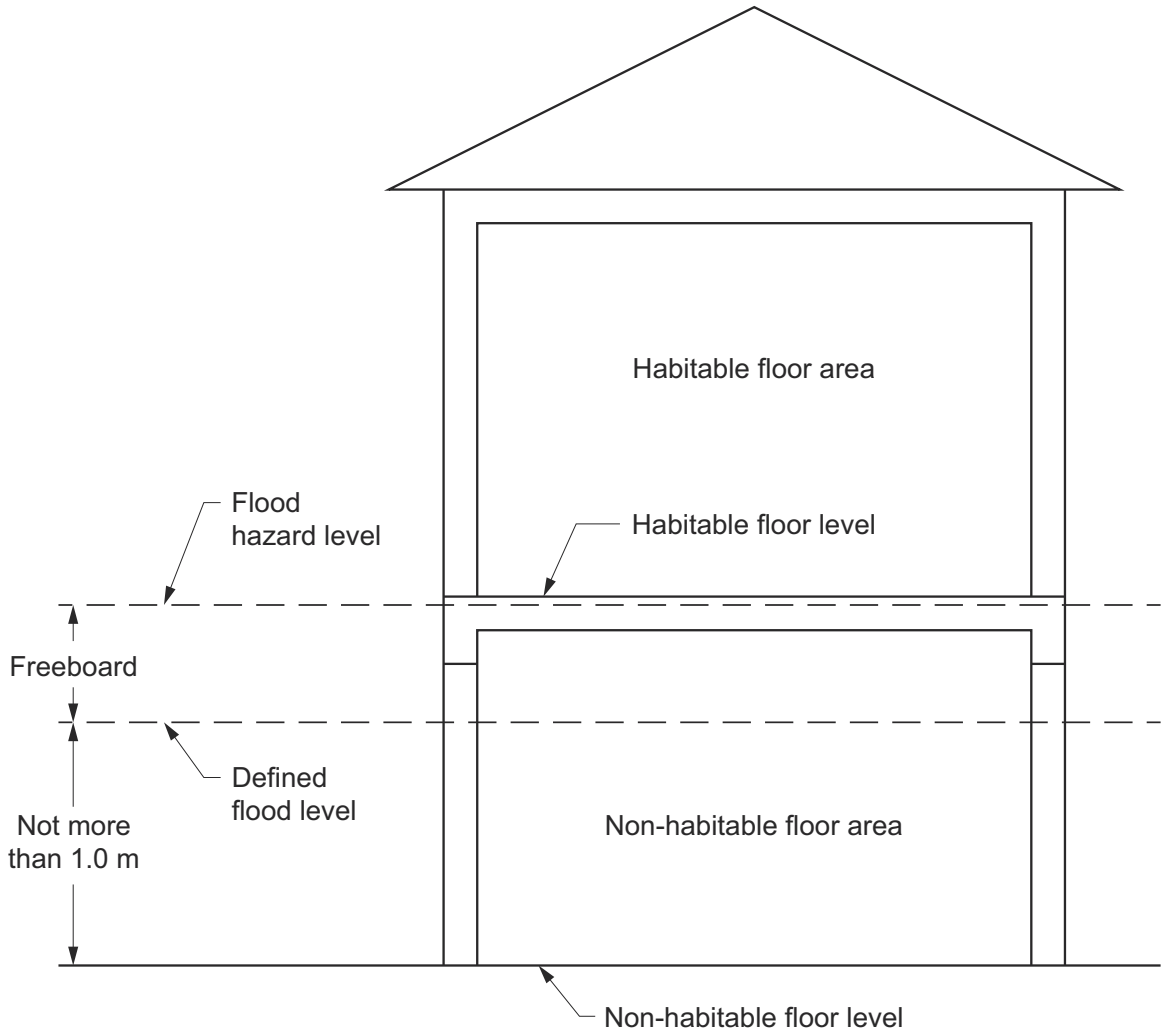

Dehumidification gram hours: For any one hour when the mean humidity is more than 15.7g/kg, the grams per kilogram of absolute humidity difference between the mean outdoor absolute humidity and 15.7g/kg.

NSW Designated bushfire prone area

Designated bushfire prone area: Land which has been designated under a power of legislation as being subject, or likely to be subject, to bushfires.

Design bushfire: The characteristics of a bushfire, its initiation, spread and development, which arises from weather conditions, topography and fuel (vegetation) in a given setting, used to determine *fire actions*.

Design fire: The quantitative description of a representation of a fire within the *design scenario*.

Design scenario: The specific scenario of which the sequence of events is quantified and a *fire safety engineering* analysis is conducted against.

WA Design wind speed

Design wind speed: The design gust wind speed for the area where the building is located, calculated in accordance with AS/NZS 1170.2 or AS 4055 (see Table 4 for wind classes).

Table 4: Wind classes

Non-cyclonic Region A and B	Cyclonic Region C and D
N1, N2, N3	C1
N4, N5, N6 (these wind classes are covered in the ABCB Housing Provisions Part 2.2).	C2, C3, C4 (these wind classes are covered in the ABCB Housing Provisions Part 2.2).

Table Notes

(1) Wind classification map identifying wind regions is contained in ABCB Housing Provisions Part 2.2 (see Figure 2.2.3).

(2) Information on wind classes for particular areas may be available from the *appropriate authority*.

(3) "N" = non-cyclonic winds and "C" = cyclonic winds.

Detention centre: A building in which persons are securely detained by means of the built structure including a prison, remand centre, juvenile detention centre, holding cells or psychiatric detention centre.

NSW Development consent

Direct fix cladding wall: For the purposes of F3V1 and H2V1, means a wall with cladding attached directly to the wall framing without the use of a drained cavity.

Discontinuous construction: Means—

(a) a wall having a minimum 20 mm cavity between 2 separate leaves, and—

(i) for masonry, where wall ties are used to connect leaves, the ties are of the resilient type; and

(ii) for other than masonry, there is no mechanical linkage between the leaves, except at the periphery; and

(b) a staggered stud wall is not deemed to be discontinuous construction.

Display glazing: *Glazing* used to display retail goods in a shop or showroom directly adjacent to a walkway or footpath, but not including that used in a café or restaurant.

Domestic services: The basic engineering systems that use energy or control the use of energy; and—

(a) includes—

(i) heating, *air-conditioning*, mechanical ventilation and artificial lighting; and

(ii) pumps and heaters for *swimming pools* and spa pools; and

(iii) heated water systems; and

(iv) on-site *renewable energy* equipment; but

(b) excludes cooking facilities and portable appliances.

Drainage: Any part of—

(a) a sanitary drainage system, including any liquid trade waste drainage; or

(b) a stormwater drainage system.

Drainage flange: A flange connected to a waste pipe, at the point at which it passes through the floor substrate, to prevent leakage and which enables tile bed drainage into the waste pipe.

Drainage riser: A waste pipe between the floor waste and the drainage system.

Drinking water: Water intended primarily for human consumption but which has other domestic uses.

Explanatory Information

See also the Australian Drinking Water Guidelines produced by the National Health and Medical Research Council.

TAS Early childhood centre

VIC Early childhood centre

Early childhood centre: Any premises or part thereof providing or intending to provide a centre-based education and care service within the meaning of the Education and Care Services National Law Act 2010 (Vic), the Education and Care Services National Regulations and centre-based services that are licensed or approved under State and Territory children's services law, but excludes education and care primarily provided to school aged children in outside school

hours settings.

Effective height: The vertical distance between the floor of the lowest *storey* included in the calculation of *rise in storeys* and the floor of the topmost *storey* (excluding the topmost *storey* if it contains only heating, ventilating, lift or other equipment, water tanks or similar service units).

Efficacy: The degree to which a system achieves a design objective given that it performs to a level consistent with the system specification during the relevant fire scenario.

Electricity network substation: A building in which high voltage supply is converted or transformed and which is controlled by a licensed network service provider designated under a power of legislation.

Electric passenger lift: A power-operated lift for raising or lowering people in a car in which the motion of the car is obtained from an electric motor mechanically coupled to the hoisting mechanism.

Electrohydraulic passenger lift: A power-operated lift for raising or lowering people in a car in which the motion of the car is obtained from the action of liquid under pressure acting on a piston or ram, the pressure being generated by a pump driven by an individual electric motor.

Energy value: The net cost to society including, but not limited to, costs to the building user, the environment and energy networks.

Engaged pier: A pier bonded to a masonry wall by course bonding of masonry units or by masonry ties.

NSW Entertainment venue

Envelope: For the purposes of—

(a) Section J in NCC Volume One, the parts of a building's *fabric* that separate a *conditioned space* or *habitable room* from—

(i) the exterior of the building; or

(ii) a non-*conditioned space* including—

(A) the floor of a rooftop plant room, lift-machine room or the like; and

(B) the floor above a *carpark* or warehouse; and

(C) the *common wall* with a *carpark*, warehouse or the like; or

(b) Part H6 in NCC Volume Two and Section 13 of the ABCB Housing Provisions, the parts of a building's *fabric* that separate artificially heated or cooled spaces from—

(i) the exterior of the building; or

(ii) other spaces that are not artificially heated or cooled.

Equivalent: Equivalent to the level of health, safety and amenity provided by the *Deemed-to-Satisfy Provisions*.

Evacuation route: The continuous path of travel (including *exits*, *public corridors* and the like) from any part of a building, including within a *sole-occupancy unit* in a Class 2 or 3 building or Class 4 part, to a *safe place*.

Evacuation time: The time calculated from when the emergency starts for the occupants of the building to evacuate to a *safe place*.

Exit: Means—

(a) Any, or any combination of the following if they provide egress to a road or *open space*:

(i) An internal or external stairway.

(ii) A ramp.

(iii) A *fire-isolated passageway*.

(iv) A doorway opening to a road or *open space*; or

(b) A *horizontal exit* or a *fire-isolated passageway* leading to a *horizontal exit*.

TAS Expert judgement

Expert judgement: The judgement of an expert who has the qualifications and experience to determine whether a *Performance Solution* or *Deemed-to-Satisfy Solution* complies with the *Performance Requirements*.

Explanatory Information

Contemporary and relevant qualifications and/or experience are necessary to determine whether a *Performance*

Solution complies with the *Performance Requirements*. The level of qualification and/or experience may differ depending on the complexity of the proposal and the requirements of the regulatory authority. Practitioners should seek advice from the authority having jurisdiction or *appropriate authority* for clarification as to what will be accepted.

External wall: For the purposes of—

(a) Volume One, an outer wall of a building which is not a *common wall*; or

(b) Volume Two, an outer wall of a building which is not a *separating wall*.

Extra-low voltage: A *voltage* not exceeding 50 V AC or 120 V ripple-free DC.

Fabric: The basic building structural elements and components of a building including the roof, ceilings, walls, glazing and floors.

SA Farm building

Farm building: A Class 7 or 8 building located on land primarily used for *farming*—

(a) that is—

(i) used in connection with *farming*; or

(ii) used primarily to store one or more *farm vehicles*; or

(iii) a combination of (i) and (ii); and

(b) in which the total number of persons accommodated at any time does not exceed one person per 200 m² of floor area or part thereof, up to a maximum of 8 persons; and

(c) with a total *floor area* of not more than 3500 m².

Farming: Includes—

(a) cultivating, propagating and harvesting plants or fungi or their products or parts, including seeds, spores, bulbs or the like, but does not include forestry; or

(b) maintaining animals in any physical environment for the purposes of—

(i) breeding them; or

(ii) selling them; or

(iii) acquiring and selling their bodily produce such as milk, wool, eggs or the like; or

(c) a combination of (a) and (b),

but does not include forestry or maintaining animals for sport or recreational purposes.

Farm shed: A single *storey* Class 7 or 8 building located on land primarily used for *farming*—

(a) that is—

(i) used in connection with *farming*; or

(ii) used primarily to store one or more *farm vehicles*; or

(iii) a combination of (i) and (ii); and

(b) occupied neither frequently nor for extended periods by people; and

(c) in which the total number of persons accommodated at any time does not exceed 2; and

(d) with a total *floor area* of more than 500 m² but not more than 2000 m².

Farm vehicle: A vehicle used in connection with *farming*.

NSW Film

Finished ground level: The ground level adjacent to footing systems at the completion of construction and landscaping.

Fire actions: Each of the following:

(a) airborne embers; and

(b) burning debris and/or accumulated embers adjacent to building elements; and

(c) heat transfer from combustible materials within the site; and

(d) radiant heat from a bushfire front; and

(e) flame contact from a bushfire front; and

(f) the period of time post fire front subject to collapsing vegetation due to persistent combustion.

Fire brigade: A statutory authority constituted under an Act of Parliament having as one of its functions, the protection of life and property from fire and other emergencies.

Fire brigade station: For the purposes of E1D2(1)(b) and I3D9, means a state or territory government operated premises which is a station for a *fire brigade*.

Fire compartment: Either—

(a) the total space of a building; or

(b) when referred to in—

(i) the *Performance Requirements* — any part of a building separated from the remainder by barriers to fire such as walls and/or floors having an appropriate resistance to the spread of fire with any openings adequately protected; or

(ii) the *Deemed-to-Satisfy Provisions* — any part of a building separated from the remainder by walls and/or floors each having an FRL not less than that *required* for a *fire wall* for that type of construction and where all openings in the separating construction are protected in accordance with the *Deemed-to-Satisfy Provisions* of the relevant Part.

Fire growth: The stage of fire development during which the *heat release rate* and the temperature of the fire are generally increasing.

Fire hazard: The danger in terms of potential harm and degree of exposure arising from the start and spread of fire and the smoke and gases that are thereby generated.

Fire hazard properties: The following properties of a material or assembly that indicate how they behave under specific fire test conditions:

(a) *Average specific extinction area*, *critical radiant flux* and *Flammability Index*, determined as defined in Schedule 1.

(b) *Smoke-Developed Index*, *smoke development rate* and *Spread-of-Flame Index*, determined in accordance with Specification 3.

(c) *Group number* and *smoke growth rate index* ($SMOGRA_{RC}$), determined in accordance with Specification 7.

Fire intensity: The rate of release of calorific energy in watts, determined either theoretically or empirically, as applicable.

Fire-isolated passageway: A corridor, hallway or the like, of *fire-resisting construction*, which provides egress to or from a *fire-isolated stairway* or *fire-isolated ramp* or to a road or *open space*.

Fire-isolated ramp: A ramp within a *fire-resisting* enclosure which provides egress from a *storey*.

Fire-isolated stairway: A stairway within a *fire-resisting shaft* and includes the floor and roof or top enclosing structure.

Fire load: The sum of the net calorific values of the *combustible* contents which can reasonably be expected to burn within a *fire compartment*, including furnishings, built-in and removable materials, and building elements.

Notes

The calorific values must be determined at the ambient moisture content or humidity (the unit of measurement is MJ).

Fire-protected timber: *Fire-resisting* timber building elements that comply with Specification 10.

Fire-protective covering: Any one or more of the following:

(a) 13 mm fire-protective grade plasterboard.

(b) 12 mm cellulose cement flat sheeting complying with AS/NZS 2908.2 or ISO 8336.

(c) 12 mm fibrous plaster reinforced with 13 mm x 13 mm x 0.7 mm galvanised steel wire mesh located not more than 6 mm from the exposed face.

(d) Other material not less fire-protective than 13 mm fire-protective grade plasterboard, fixed in accordance with the normal trade practice for a fire-protective covering.

Fire-resistance level (FRL): The grading periods in minutes determined in accordance with Specifications 1 and 2, for the following criteria—

(a) *structural adequacy*; and

(b) *integrity*; and

(c) *insulation*,

and expressed in that order.

Notes

A dash means there is no requirement for that criterion. For example, 90/–/– means there is no requirement for an FRL for *integrity* and *insulation*, and –/–/– means there is no requirement for an FRL.

Fire-resisting construction: For the purposes of Volume One, means one of the Types of construction referred to in Part C2 of Volume One.

Fire-resisting: For the purposes of—

(a) Volume One, applied to a building element, having an FRL appropriate for that element; or

(b) Volume Two, applied to a *structural member* or other part of a building, having the FRL *required* for that *structural member* or other part.

Fire safety engineering: Application of engineering principles, rules and *expert judgement* based on a scientific appreciation of the fire phenomenon, often using specific *design scenario*, of the effects of fire and of the reaction and behaviour of people in order to—

(a) save life, protect property and preserve the environment and heritage from destructive fire; and

(b) quantify the hazards and risk of fire and its effects; and

(c) mitigate fire damage by proper design, construction, arrangement and use of buildings, materials, structures, industrial processes and transportation systems; and

(d) evaluate analytically the optimum protective and preventive measures, including design, installation and maintenance of active and passive fire and life safety systems, necessary to limit, within prescribed levels, the consequences of fire.

Fire safety system: One or any combination of the methods used in a building to—

(a) warn people of an emergency; or

(b) provide for safe evacuation; or

(c) restrict the spread of fire; or

(d) extinguish a fire,

and includes both active and passive systems.

Fire-source feature: Any one or more of the following:

(a) The far boundary of a road, river, lake or the like adjoining the allotment.

(b) A side or rear boundary of the allotment.

(c) An *external wall* of another building on the allotment which is not a Class 10 building.

Fire wall: A wall with an appropriate resistance to the spread of fire that divides a *storey* or building into *fire compartments*.

Fixed wired: For the purposes of Specification 23, a system of electrical wiring (either AC or DC), in which cables are fixed or supported in position.

Flammability Index: The index number as determined by AS 1530.2.

VIC Flashing

Flashing: A strip or sleeve of impervious material dressed, fitted or built-in to provide a barrier to water movement, or to divert the travel of water, or to cover a joint where water would otherwise penetrate to the interior of a building, and includes the following:

(a) Perimeter flashing: a flashing used at the floor-wall junction.

(b) Vertical flashing: a flashing used at wall junctions within *shower areas*.

Flashover: In relation to *fire hazard properties*, means a *heat release rate* of 1 MW.

Flight: That part of a stair that has a continuous series of *risers*, including *risers* of *winders*, not interrupted by a *landing* or floor.

Explanatory Information

A *flight* is the part of a stair that has a continuous slope created by the nosing line of treads. The length of a *flight* is limited to restrict the distance a person could fall down a stair.

Quarter *landings*, as shown in Explanatory Figure 1, are considered sufficient to halt a person's fall and therefore are considered for the purposes of NCC Volume Two and the ABCB Housing Provisions not to be part of the *flight*.

Figure 1 (explanatory): Identification of stair flights — Plan view

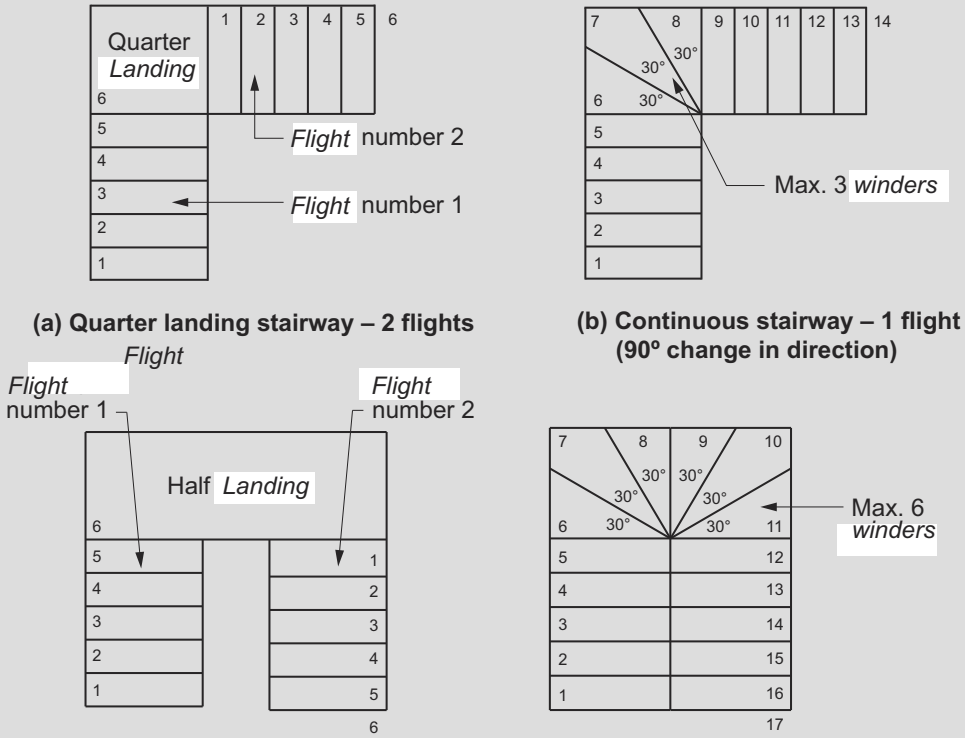

(a) Quarter landing stairway – 2 flights

(b) Continuous stairway – 1 flight (90º change in direction)

(c) Half landing stairway – 2 flights

(d) Continuous stairway – 1 flight (180º change in direction)

VIC Flood hazard area

Flood hazard area: The *site* (whether or not mapped) encompassing land lower than the *flood hazard level* which has been determined by the *appropriate authority*.

Flood hazard level (FHL): The flood level used to determine the height of floors in a building and represents the *defined flood level* plus the *freeboard* (see Figure 3).

Floor area: For the purposes of—

(1) Volume One—

(a) in relation to a building — the total area of all *storeys*; and

(b) in relation to a *storey* — the area of all floors of that *storey* measured over the enclosing walls, and includes—

(i) the area of a *mezzanine* within the *storey*, measured within the finished surfaces of any *external walls*; and

(ii) the area occupied by any *internal wall* or partitions, any cupboard, or other built-in furniture, fixture or fitting; and

(iii) if there is no enclosing wall, an area which has a use that contributes to the *fire load* or impacts on the safety, health or amenity of the occupants in relation to the provisions of the BCA; and

(c) in relation to a room — the area of the room measured within the internal finished surfaces of the walls, and includes the area occupied by any cupboard or other built-in furniture, fixture or fitting; and

(d) in relation to a *fire compartment* — the total area of all floors within the *fire compartment* measured within the finished internal surfaces of the bounding construction, and if there is no bounding construction, includes an area which has a use which contributes to the *fire load*; and

(e) in relation to an *atrium* — the total area of all floors within the *atrium* measured within the finished surfaces

of the bounding construction and if no bounding construction, within the *external walls*.

(2) Volume Two and the ABCB Housing Provisions, in relation to a room, the area of the room measured within the finished surfaces of the walls, and includes the area occupied by any cupboard or other built-in furniture, fixture or fitting (see Figure 4).

Figure 4: Identification of floor area of a room

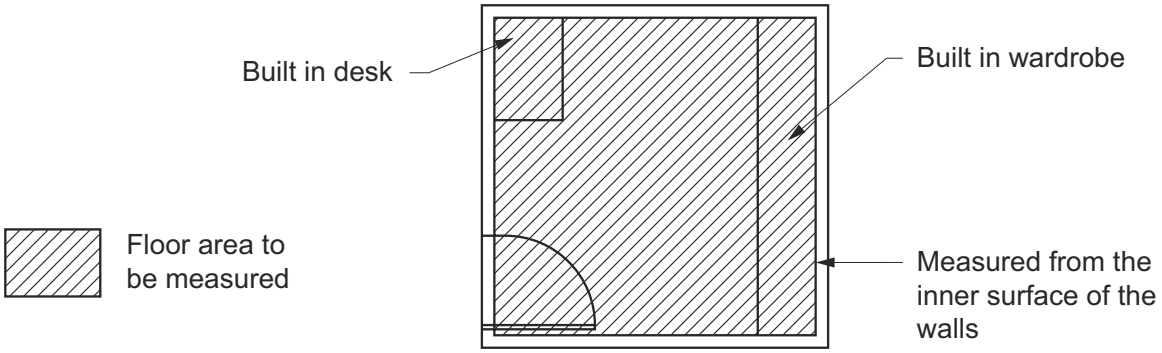

Floor waste: A grated inlet within a graded floor intended to drain the floor surface.

NSW Flying scenery

Foundation: The ground which supports the building (see Figure 5).

Figure 5: Identification of foundation

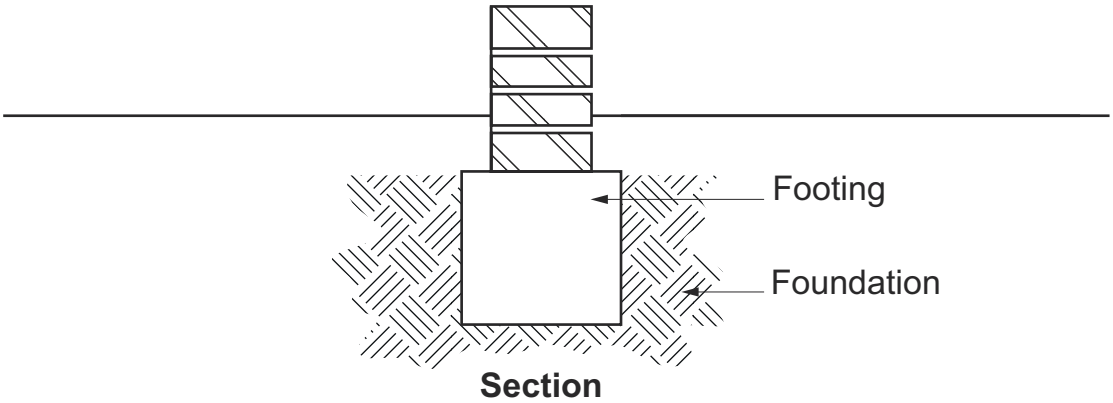

Fractional effective dose (FED): The fraction of the dose (of thermal effects) that would render a person of average susceptibility incapable of escape.

Explanatory Information

The definition for FED has been modified from the ISO definition to be made specific for the Fire Safety *Verification Method*. The use of CO or CO_2 as part of FED is not part of that *Verification Method*. This is because the ability to measure CO in a repeatable test varies by two orders of magnitude for common cellosic fuel.

VIC Freeboard

Freeboard: The height above the *defined flood level* as determined by the *appropriate authority*, used to compensate for effects such as wave action and localised hydraulic behaviour.

Fully developed fire: The state of total involvement of the majority of available combustible materials in a fire.

NSW Garage top dwelling

Glazing: For the purposes of—

(a) Section J of Volume One, except for a *sole-occupancy unit* of a Class 2 building or a Class 4 part of a building—

(i) a transparent or translucent element and its supporting frame located in the *envelope*; and

(ii) includes a *window* other than a *roof light*; or

(b) Section J of NCC Volume One, for a *sole-occupancy unit* of a Class 2 building or a Class 4 part of a building—

(i) a translucent element and its supporting frame located in the external *fabric* of the building; and

(ii) includes a *window* other than a *roof light*; or

(c) Part H6 of NCC Volume Two and Section 13 of the ABCB Housing Provisions—

(i) a transparent or translucent element and its supporting frame located in the external *fabric* of the building; and

(ii) includes a *window* other than a *roof light*.

Going: The horizontal dimension from the front to the back of a tread less any overhang from the next tread or *landing* above (see Figure 11.2.2f in the ABCB Housing Provisions).

Green Star: The building sustainability rating scheme managed by the Green Building Council of Australia.

NSW Grid

Group number: The number of one of 4 groups of materials used in the regulation of *fire hazard properties* and applied to materials used as a finish, surface, lining, or attachment to a wall or ceiling.

Habitable room: A room used for normal domestic activities, and—

(a) includes a bedroom, living room, lounge room, music room, television room, kitchen, dining room, sewing room, study, playroom, family room, home theatre and sunroom; but

(b) excludes a bathroom, laundry, water closet, pantry, walk-in wardrobe, corridor, hallway, lobby, photographic darkroom, clothes-drying room, and other spaces of a specialised nature occupied neither frequently nor for extended periods.

Hazard Rating: A level of potential toxicity that may cause contamination in a *drinking water* system, having a rating of *Low Hazard*, *Medium Hazard* or *High Hazard*, determined in accordance with NCC Volume Three.

Health-care building: A building whose occupants or patients undergoing medical treatment generally need physical assistance to evacuate the building during an emergency and includes—

(a) a public or private hospital; or

(b) a nursing home or similar facility for sick or disabled persons needing full-time care; or

(c) a clinic, day surgery or procedure unit where the effects of the predominant treatment administered involve patients becoming non-ambulatory and requiring supervised medical care on the premises for some time after the treatment.

Heated water: Water that has been intentionally heated; normally referred to as hot water or warm water.

Heating degree hours: For any one hour when the mean outdoor air temperature is less than 15°C, the degrees Celsius temperature difference between the mean outdoor air temperature and 15°C.

Heating load: The calculated amount of energy delivered to the heated spaces of the building annually by artificial means to maintain the desired temperatures in those spaces.

Heat release: The thermal energy produced by combustion (measured in kJ).

Heat release rate (HRR): The rate of thermal energy production generated by combustion, measured in kW (preferred) or MW.

High Hazard: Any condition, device or practice which, in connection with a water supply, has the potential to cause death.

High wind area: A region that is subject to *design wind speed* more than N3 or C1 (see Table 4).

Hob: The upstand at the perimeter of a *shower area*.

Horizontal exit: A *required* doorway between 2 parts of a building separated from each other by a *fire wall*.

VIC Hotel offering shared accommodation

Hours of operation: The number of hours when the occupancy of the building is greater than 20% of the peak occupancy.

House energy rating software: For the purposes of—

(a) Volume One, software accredited under the Nationwide House Energy Rating Scheme (NatHERS); or

(b) Volume Two—

(i) applied to H6V2—software accredited or previously accredited under the Nationwide House Energy Rating Scheme (NatHERS) and the additional functionality provided in non-regulatory mode; and

(ii) applied to Specification 42—software accredited under the Nationwide House Energy Rating Scheme (NatHERS).

Explanatory Information

The Nationwide House Energy Rating Scheme (NatHERS) refers to the Australian Governments' scheme that facilitates consistent energy ratings from software tools which are used to assess the potential thermal efficiency of dwelling envelopes.

Illuminance: The luminous flux falling onto a unit area of surface.

Illumination power density: The total of the power that will be consumed by the lights in a space, including any lamps, ballasts, current regulators and control devices other than those that are plugged into socket outlets for intermittent use such as floor standing lamps, desk lamps or work station lamps, divided by the area of the space, and expressed in W/m^2.

Explanatory Information

Illumination power density relates to the power consumed by the lighting system and includes the light source or luminaire and any control device. The power for the lighting system is the illumination power load. This approach is more complicated than the *lamp power density* approach but provides more flexibility for a dwelling with sophisticated control systems.

The area of the space refers to the area the lights serve. This could be considered a single room, open plan space, verandah, balcony or the like, or the total area of all these spaces.

Inclined lift: A power-operated device for raising or lowering people within a carriage that has one or more rigid guides on an inclined plane.

Individual protection: The installation of a *backflow prevention device* at the point where a water service connects to a single fixture or appliance.

NSW Information and education facility

Insulation: In relation to an FRL, the ability to maintain a temperature on the surface not exposed to the furnace below the limits specified in AS 1530.4.

Integrity: In relation to an FRL, the ability to resist the passage of flames and hot gases specified in AS 1530.4.

Internal wall: For the purposes of—

(a) Volume One, excludes a *common wall* or a party wall; or

(b) Volume Two, excludes a *separating wall*, *common wall* or party wall.

Interstitial condensation: The *condensation* of moisture on surfaces between material layers inside the building component.

Irrigation system: An irrigation system of the following types:

(a) Type A— all permanently open outlets and piping more than 150 mm above finished surface level, not subject to ponding or *backpressure* and not involving injection systems.

(b) Type B— irrigation systems in domestic or residential buildings with piping or outlets installed less than 150 mm above finished surface level and not involving injection systems.

(c) Type C— irrigation systems in other than domestic or residential buildings with piping outlets less than 150 mm above finished surface level and not involving injection systems.

(d) Type D— irrigation systems where fertilizers, herbicides, nematicides or the like are injected or siphoned into the system.

JAS-ANZ: The Joint Accreditation System of Australia and New Zealand.

Lamp power density: The total of the maximum power rating of the lamps in a space, other than those that are plugged into socket outlets for intermittent use such as floor standing lamps, desk lamps or work station lamps, divided by the area of the space, and expressed in W/m^2.

Explanatory Information

Lamp power density is a simple means of setting energy consumption at an efficient level for Class 1 and associated Class 10a buildings.

Lamp refers to the globe or globes that are to be installed in a permanently wired light fitting. The maximum power of

a lamp is usually marked on the fitting as the maximum allowable wattage.

The area of the space refers to the area the lights serve. This could be considered a single room, open plan space, verandah, balcony or the like, or the total area of all these spaces.

Landing: An area at the top or bottom of a *flight* or between two *flights*.

Latent heat gain: The heat gained by the vapourising of liquid without change of temperature.

Lateral support: A support (including a footing, buttress, cross wall, beam, floor or braced roof structure) that effectively restrains a wall or pier at right angles to the face of the wall or pier.

Lead free: Where a plumbing product or material in contact with *drinking water* has a *weighted average* lead content of not more than 0.25%.

NSW Licensed premises

WA Licensed premises

Lightweight construction: Construction which incorporates or comprises—

(a) sheet or board material, plaster, render, sprayed application, or other material similarly susceptible to damage by impact, pressure or abrasion; or

(b) concrete and concrete products containing pumice, perlite, vermiculite, or other soft material similarly susceptible to damage by impact, pressure or abrasion; or

(c) masonry having a width of less than 70 mm.

Loadbearing: Intended to resist vertical forces additional to those due to its own weight.

Loadbearing wall: For the purposes of H1D4 and H2D3 of NCC Volume Two and Section 4 of the ABCB Housing Provisions, means any wall imposing on the footing a load greater than 10 kN/m.

Loss: Physical damage, financial loss or loss of *amenity*.

Low Hazard: Any condition, device or practice which, in connection with a water supply, would constitute a nuisance by colour, odour or taste but does not have the potential to injure or endanger health.

Low rainfall intensity area: An area with a 5 minute rainfall intensity for an *annual exceedance probability* of 5% of not more than 125 mm/hour.

Explanatory Information

Rainfall intensity figures can be obtained from Table 7.4.3d in the ABCB Housing Provisions.

Low-rise, low-speed constant pressure lift: A power-operated low-rise, low-speed device for raising or lowering people with limited mobility on a carriage that is controlled by the application of constant pressure to a control.

Low-rise platform lift: A power-operated device for raising or lowering people with limited mobility on a platform, that is controlled automatically or by the application of constant pressure to a control.

Low voltage: A *voltage* exceeding *extra-low voltage*, but not exceeding 1000 V AC or 1500 V DC.

Luminance contrast: The light reflected from one surface or component, compared to the light reflected from another surface or component.

Main water heater: The domestic hot water unit in a dwelling that is connected to at least one shower and the largest number of hot water outlets.

Main space conditioning: Either—

(a) the heating or cooling equipment that serves at least 70% of the *conditioned space* of a dwelling; or

(b) if no one heating or cooling equipment serves at least 70% of the *conditioned space* of the dwelling, the equipment that results in the highest net equivalent energy usage when calculated in accordance with J3D14(1)(a) of NCC Volume One or 13.6.2(1)(a) of the ABCB Housing Provisions.

Notes

(1) If a multi-split *air-conditioning* unit is installed, it is considered to be a single heating or cooling *service*.

(2) A series of separate heaters or coolers of the one type can be considered a single heater or cooler type with a performance level of that of the unit with the lowest efficiency.

Explanatory Information

The purpose of defining for main space conditioning is to provide criteria upon which the heating or cooling equipment should be selected when showing compliance with J3D14(1)(a) of NCC Volume One and 13.6.2(1)(a) of the ABCB Housing Provisions when more than one type and efficiency of equipment is present. In J3D14(1)(a) the formula that determines E_R allows the selection of only one heating or cooling system. This definition requires that if any one system serves at least 70% of the *floor area* that is heated or cooled it should be used as the basis of determining E_R. If, however, no one system serves at least 70% of the *floor area*, then the appliance that results in the highest net equivalent energy usage, when calculated in accordance with J3D14(1)(a)/13.6.2(1)(a), should be selected.

Massive timber: An element not less than 75 mm thick as measured in each direction formed from solid and laminated timber.

Maximum retained water level: The point where surface water will start to overflow out of the *shower area*.

Medium Hazard: Any condition, device or practice which, in connection with a water supply, has the potential to injure or endanger health.

Membrane: A barrier impervious to moisture.

Explanatory Information

A barrier may be a single or multi-part system.

Mezzanine: An intermediate floor within a room.

Minimum Energy Performance Standards (MEPS): The Minimum Energy Performance Standards for equipment and appliances established through the Greenhouse and Energy Minimum Standards Act 2012.

NSW Minimum lateral clearance

Mixed construction: A building consisting of more than one form of construction, particularly in double-storey buildings.

Mould: A fungal growth that can be produced from conditions such as dampness, darkness, or poor ventilation.

NABERS Energy: The National Australian Built Environment Rating Systems for energy efficiency, which is managed by the New South Wales Government.

Network Utility Operator: A person who—

(a) undertakes the piped distribution of *drinking water* or *non-drinking water* for supply; or

(b) is the operator of a sewerage system or a stormwater *drainage* system.

Explanatory Information

A Network Utility Operator in most States and Territories is the water and sewerage authority licensed to supply water and receive sewage and/or stormwater. The authority operates or proposes to operate a network that undertakes the distribution of water for supply and undertakes to receive sewage and/or stormwater drainage. This authority may be a licensed utility, local government body or council.

Non-combustible: Applied to—

(a) a material — means not deemed *combustible* as determined by AS 1530.1 — Combustibility Tests for Materials; or

(b) construction or part of a building — means constructed wholly of materials that are not deemed *combustible*.

Non-drinking water: Water which is not intended primarily for human consumption.

Occupant traits: For the purposes of—

(a) Volume One, the features, needs and profile of the occupants in a *habitable room* or space; or

(b) Volume Two, the features, needs and profile of the occupants in a room or space.

Explanatory Information

For the purpose of Volume Two, this term is used to describe the characteristics of the occupants and their associated requirements in relation to a room or space.

For example, in relation to a bedroom, the following occupant characteristics and associated requirements should be

considered:

- Characteristics: height, mobility and how often the space will be used.
- Requirements: a sleeping space and a space to undertake leisure activities.

Occupiable outdoor area: A space on a roof, balcony or similar part of a building—

(a) that is open to the sky; and

(b) to which access is provided, other than access only for maintenance; and

(c) that is not *open space* or directly connected with *open space*.

VIC On-site wastewater management system

On-site wastewater management system: A system that receives and/or treats wastewater generated and discharges the resulting effluent to an *approved disposal system* or re-use system.

Open-deck carpark: A carpark in which all parts of the parking *storeys* are cross-ventilated by permanent unobstructed openings in not fewer than 2 opposite or approximately opposite sides, and—

(a) each side that provides ventilation is not less than $^{1}/_{6}$ of the area of any other side; and

(b) the openings are not less than ½ of the wall area of the side concerned.

Open space: A space on the allotment, or a roof or similar part of a building adequately protected from fire, open to the sky and connected directly with a public road.

Open spectator stand: A tiered stand substantially open at the front.

Other property: All or any of the following—

(a) any building on the same or an adjoining allotment; and

(b) any adjoining allotment; and

(c) a road.

Outdoor air: Air outside the building.

Outdoor air economy cycle: A mode of operation of an *air-conditioning* system that, when the *outdoor air* thermodynamic properties are favourable, increases the quantity of *outdoor air* used to condition the space.

Outfall: That part of the disposal system receiving *surface water* from the *drainage* system and may include a natural water course, kerb and channel, or soakage system.

Overflow device: A device that provides relief to a water service, sanitary *plumbing* and *drainage* system, *rainwater service* or stormwater system to avoid the likelihood of *uncontrolled discharge*.

Panel wall: A non-*loadbearing external wall*, in frame or similar construction, that is wholly supported at each *storey*.

Partially buried rainwater tank: A rainwater tank that is not completely covered by earth but is partially set into the ground.

Patient care area: A part of a *health-care building* normally used for the treatment, care, accommodation, recreation, dining and holding of patients including a *ward area* and *treatment area*.

Performance-based design brief (PBDB): The report that defines the scope of work for the performance-based analysis, the technical basis for analysis, and the criteria for acceptance of any relevant *Performance Solution* as agreed by stakeholders.

Performance Requirement: A requirement which states the level of performance which a *Performance Solution* or *Deemed-to-Satisfy Solution* must meet.

Performance Solution: A method of complying with the *Performance Requirements* other than by a *Deemed-to-Satisfy Solution*.

Perimeter of building: For the purposes of Section 8 of the Housing Provisions, means the external envelope of a building.

TAS Permit Authority

Personal care services: Any of the following:

(a) The provision of nursing care.

(b) Assistance or supervision in—

(i) bathing, showering or personal hygiene; or

(ii) toileting or continence management; or

(iii) dressing or undressing; or

(iv) consuming food.

(c) The provision of direct physical assistance to a person with mobility problems.

(d) The management of medication.

(e) The provision of substantial rehabilitative or development assistance.

Piping: For the purposes of Section J in Volume One or Part H6 in Volume Two, and Section 13 of the Housing Provisions, means an assembly of pipes, with or without valves or other fittings, connected together for the conveyance of liquids and gases.

NSW Planning for Bush Fire Protection

Pliable building membrane: A water barrier as classified by AS 4200.1.

VIC Plumbing

Plumbing: Any water service plumbing or sanitary plumbing system.

Plumbing or Drainage Solution: A solution which complies with the *Performance Requirement* and is a—

(a) *Performance Solution*; or

(b) *Deemed-to-Satisfy Solution*; or

(c) combination of (a) and (b).

Point of connection: Any of the following:

(a) For a cold water service, means the point where the cold water service connects to—

(i) the *Network Utility Operator's* water supply system; or

(ii) the point of isolation to an alternative water source where there is no *Network Utility Operator's* water supply available or is not utilised.

(b) For a *heated water* service, means the point where the water heater connects to the cold water service downstream of the isolation valve.

(c) For sanitary *drainage*, means the point where the on-site sanitary *drainage* system connects to—

(i) the *Network Utility Operator's* sewerage system; or

(ii) an *on-site wastewater management system*.

(d) For sanitary *plumbing*, means the point where the sanitary *plumbing* system connects to the sanitary *drainage* system.

(e) For a *rainwater service*, means the point where the *rainwater service*—

(i) connects to the point of isolation for the *rainwater storage*; or

(ii) draws water from the *rainwater storage*.

(f) For stormwater disposal, means the point where the on-site stormwater *drainage* system connects to—

(i) the *Network Utility Operator's* stormwater system; or

(ii) an approved on-site disposal system.

(g) For a fire-fighting water service, means the point where the service connects to—

(i) a cold water service, downstream of a *backflow prevention device*; or

(ii) the *Network Utility Operator's* water supply system; or

(iii) the point of isolation to an alternative water source.

Notes

A domestic fire sprinkler service conforming to FPAA101D is considered part of the cold water service.

Explanatory Information

The *point of connection* is usually determined by the *Network Utility Operator* according to the water and sewerage

Acts, Regulations and codes that apply within the *Network Utility Operator's* licensed area and/or jurisdiction.

WA Potable water

Predicted Mean Vote (PMV): The Predicted Mean Vote of the thermal perception of building occupants determined in accordance with ANSI/ASHRAE Standard 55.

Preformed shower base: A preformed, prefinished *vessel* installed as the finished floor of a shower compartment, and which is provided with a connection point to a sanitary *drainage* system.

Explanatory Information

Preformed shower bases are commonly made of plastics, composite materials, vitreous enamelled pressed steel, or stainless steel.

Pressure vessel: A vessel subject to internal or external pressure, including interconnected parts and components, valves, gauges and other fittings up to the first point of connection to connecting piping, and—

(a) includes fire heaters and gas cylinders; but

(b) excludes—

(i) any vessel that falls within the definition of a *boiler*; and

(ii) storage tanks and equipment tanks intended for storing liquids where the pressure at the top of the tank is not exceeding 1.4 kPa above or 0.06 kPa below atmospheric pressure; and

(iii) domestic-type hot water supply heaters and tanks; and

(iv) pressure vessels installed for the purposes of fire suppression or which serve a fire suppression system.

QLD Primary building element

Primary building element: For the purposes of—

(a) Volume One, a member of a building designed specifically to take part of the loads specified in B1D3 and includes roof, ceiling, floor, stairway or ramp and wall framing members including bracing members designed for the specific purpose of acting as a brace to those members; or

(b) Part 3.4 of the ABCB Housing Provisions, a member of a building designed specifically to take part of the building loads and includes roof, ceiling, floor, stairway or ramp and wall framing members including bracing members designed for the specific purpose of acting as a brace to those members.

Explanatory Information

The loads to which a building may be subjected are dead, live, wind, snow and earthquake loads. Further information on building loads can be found in the AS 1170 series of Standards.

Primary insulation layer: The most interior insulation layer of a wall or roof construction.

Private bushfire shelter: A structure associated with, but not attached to, or part of a Class 1a dwelling that may, as a last resort, provide shelter for occupants from immediate life threatening effects of a bushfire.

Private garage: For the purposes of—

(a) Volume One—

(i) any garage associated with a Class 1 building; or

(ii) any single *storey* of a building of another Class containing not more than 3 vehicle spaces, if there is only one such *storey* in the building; or

(iii) any separate single *storey* garage associated with another building where such garage contains not more than 3 vehicle spaces; or

(b) Volume Two—

(i) any garage associated with a Class 1 building; or

(ii) any separate single *storey* garage associated with another building where such garage contains not more than 3 vehicle spaces.

Product: *Plumbing* and *drainage* items within the scope of Volume Three including but not limited to—

(a) materials, fixtures and components used in a *plumbing* or *drainage* installation; and

(b) appliances and equipment connected to a *plumbing* or *drainage* system.

Product Technical Statement: A form of documentary evidence stating that the properties and performance of a building material, product or form of construction fulfil specific requirements of the NCC, and describes—

(a) the application and intended use of the building material, product or form of construction; and

(b) how the use of the building material, product or form of construction complies with the requirements of the NCC Volume One and Volume Two; and

(c) any limitations and conditions of the use of the building material, product or form of construction relevant to (b).

Professional engineer: A person who is—

(a) if legislation is applicable — a registered professional engineer in the relevant discipline who has appropriate experience and competence in the relevant field; or

(b) if legislation is not applicable—

(i) registered in the relevant discipline on the National Engineering Register (NER) of the Institution of Engineers Australia (which trades as 'Engineers Australia'); or

(ii) eligible to become registered on the Institution of Engineers Australia's NER and has appropriate experience and competence in the relevant field.

NSW Projection suite

TAS Public

WA Public building

Public corridor: An enclosed corridor, hallway or the like which—

(a) serves as a means of egress from 2 or more *sole-occupancy units* to a *required exit* from the *storey* concerned; or

(b) is *required* to be provided as a means of egress from any part of a *storey* to a *required exit*.

Rainwater service: A water service which distributes water from the isolation valve of the rainwater storage to the rainwater points of discharge for purposes such as for clothes washing, urinal and water closet flushing and external hose cocks.

Rainwater storage: Any storage of rainwater collected from a roof catchment area which is used to supply water for the primary purposes of drinking, personal hygiene or other uses.

Explanatory Information

Generally this applies to alternative water sources not supplied by a *Network Utility Operator*. This does not include *rainwater storage* for non-drinking purposes.

SA Rainwater tank

Rapid roller door: A door that opens and closes at a speed of not less than 0.5 m/s.

Recognised expert: A person with qualifications and experience in the area of *plumbing* or *drainage* in question recognised by the authority having jurisdiction.

Explanatory Information

A *recognised expert* is a person recognised by the authority having jurisdiction as qualified to provide evidence under A5G4(5). Generally, this means a hydraulic consultant or engineer, however the specific requirements are determined by the authority having jurisdiction.

Under A5G4(5), a report from a *recognised expert* may be used as evidence of suitability that a *product* listed on the *WaterMark Schedule of Excluded Products*, or a *plumbing* or *drainage* system, complies with a *Performance Requirement* or *Deemed-to-Satisfy Provisions*.

Reference building: For the purposes of—

(a) Volume One, a hypothetical building that is used to calculate the maximum allowable—

(i) *annual greenhouse gas emissions* for the common area of a Class 2 building or a Class 3 to 9 building; or

(ii) *heating load*, *cooling load* and *energy value* for a *sole-occupancy unit* of a Class 2 building or a Class 4 part of a building; or

(b) Volume Two, a hypothetical building that is used to determine the maximum allowable *heating load* and *cooling load* for the proposed building.

Reflective insulation: A building membrane with a reflective surface such as a reflective foil laminate, reflective barrier, foil batt or the like capable of reducing radiant heat flow.

Explanatory Information

For Volume Two:

- Typical *R-Values* achieved by adding *reflective insulation* are given in the explanatory information accompanying Section 13 of the ABCB Housing Provisions. Information on specific products may be obtained from *reflective insulation* manufacturers.
- The surface of *reflective insulation* may be described in terms of its emittance (or infra-red emittance) or in terms of its reflectance (or solar reflectance). Generally, for the surface of a particular *reflective insulation*: emittance + reflectance = 1.
- Some types of *reflective insulation* may also serve the purposes of waterproofing or vapour proofing.

Regulated energy: The energy consumed by a building's *services* minus the amount of *renewable energy* generated and used on *site*.

Reinforced masonry: Masonry reinforced with steel reinforcement that is placed in a bed joint or grouted into a core to strengthen the masonry.

Reliability: The probability that a system performs to a level consistent with the system specification.

Renewable energy: Energy that is derived from sources that are regenerated, replenished, or for all practical purposes cannot be depleted and the energy sources include, but are not limited to, solar, wind, hydroelectric, wave action and geothermal.

Required: Required to satisfy a *Performance Requirement* or a *Deemed-to-Satisfy Provision* of the NCC as appropriate.

Required safe egress time (RSET): The time required for safe evacuation of occupants to a place of safety prior to the onset of untenable conditions.

Residential aged care building: A Class 3 or 9a building whose residents, due to their incapacity associated with the ageing process, are provided with physical assistance in conducting their daily activities and to evacuate the building during an emergency.

Residential care building: A Class 3, 9a or 9c building which is a place of residence where 10% or more of persons who reside there need physical assistance in conducting their daily activities and to evacuate the building during an emergency (including any *aged care building* or *residential aged care building*) but does not include a hospital.

VIC Residential care building (Vic)

Resident use area: Part of a Class 9c building normally used by residents, and—

(a) includes *sole-occupancy units*, lounges, dining areas, activity rooms and the like; but

(b) excludes offices, storage areas, commercial kitchens, commercial laundries and other spaces not for the use of residents.

Resistance to the incipient spread of fire: In relation to a ceiling membrane, means the ability of the membrane to insulate the space between the ceiling and roof, or ceiling and floor above, so as to limit the temperature rise of materials in this space to a level which will not permit the rapid and general spread of fire throughout the space.

Explanatory Information

Resistance to the incipient spread of fire refers to the ability of a ceiling to prevent the spread of fire and thermally insulate the space between the ceiling and the roof or floor above. "Resistance to the incipient spread of fire" is superior to "fire-resistance" because it requires a higher standard of heat insulation.

The definition is used in Volume Two for separating floors/ceilings for a Class 1a dwelling located above a non-appurtenant *private garage*.

Rise in storeys: The greatest number of *storeys* calculated in accordance with C2D3 of Volume One.

Riser: The height between consecutive treads and between each *landing* and continuous tread.

VIC Restricted children's service

Rolled fill: Material placed in layers and compacted by repeated rolling by an excavator.

SA Roof catchment area

Roof light: For the purposes of Section J and Part F6 in NCC Volume One, Part H6 in NCC Volume Two, and Part 10.5 and Section 13 of the ABCB Housing Provisions, a skylight, *window* or the like installed in a roof—

(a) to permit natural light to enter the room below; and

(b) at an angle between 0 and 70 degrees measured from the horizontal plane.

NSW Row

R-Value: The thermal resistance of a component calculated by dividing its thickness by its thermal conductivity, expressed in m^2.K/W.

Safe place: Either—

(a) a place of safety within a building—

(i) which is not under threat from a fire; and

(ii) from which people must be able to safely disperse after escaping the effects of an emergency to a road or *open space*; or

(b) a road or *open space*.

Sanitary compartment: A room or space containing a closet pan or urinal (see Figures 6a and 6b).

Figure 6a: Identification of a sanitary compartment (diagram a)

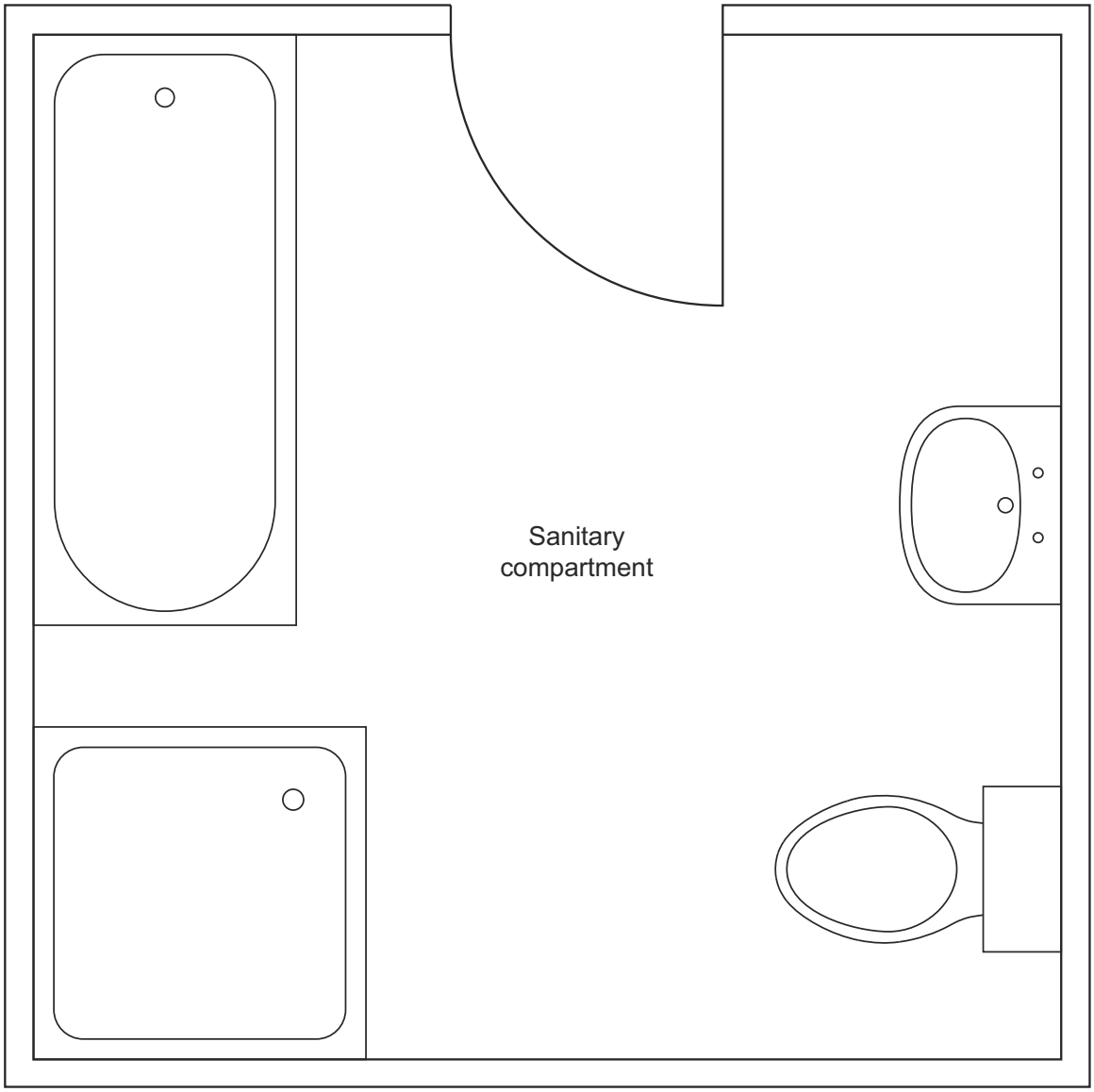

Figure 6b: Identification of a sanitary compartment (diagram b)

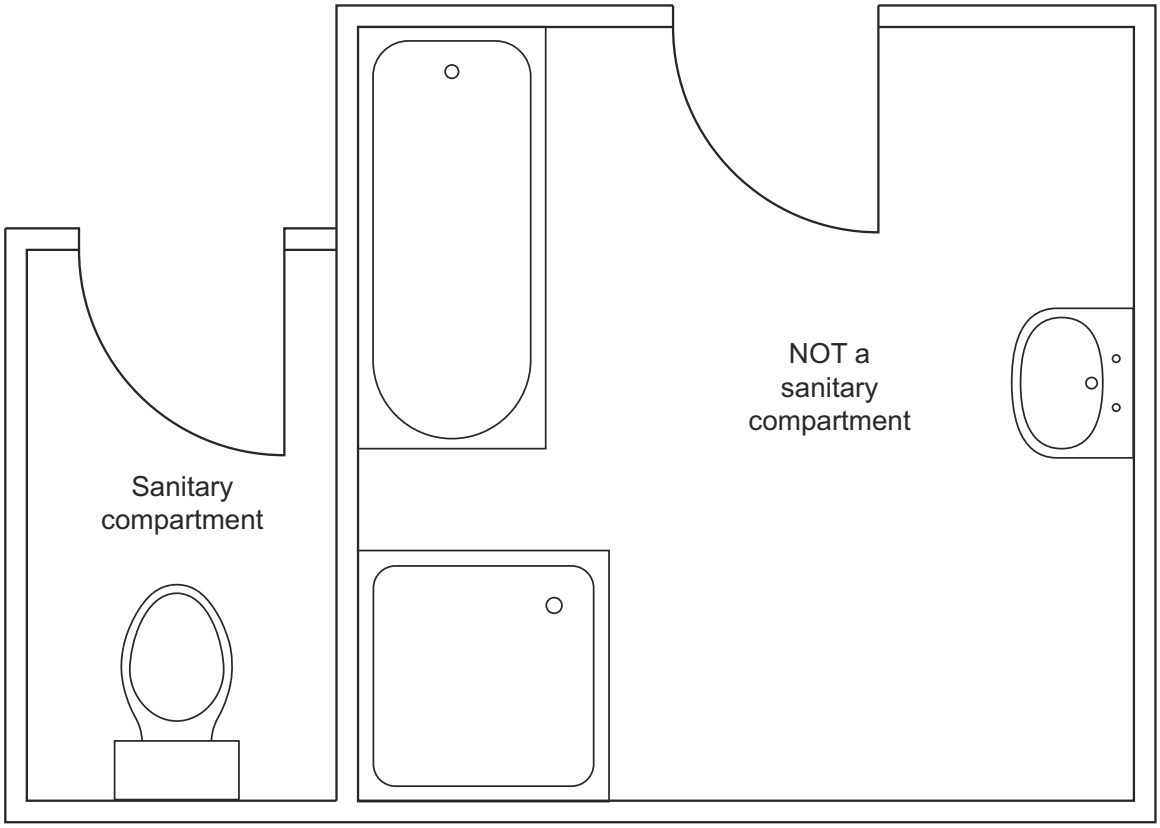

Sarking-type material: A material such as a *reflective insulation* or other flexible membrane of a type normally used for a purpose such as waterproofing, vapour management or thermal reflectance.

School: Includes a primary or secondary school, college, university or similar educational establishment.

TAS School age care facility

Screed: A layer of material (usually cement based) which sets in situ between a structural base and the finished floor material.

Self-closing: For the purposes of—

(a) Volume One, applied to a door, means equipped with a device which returns the door to the fully closed position immediately after each opening; or

(b) Volume Two, applied to a door or *window*, means equipped with a device which returns the door or *window* to the fully closed and latched position immediately after each manual opening.

Sensible heat gain: The heat gained which causes a change in temperature.

Separating element: A barrier that exhibits fire *integrity*, *structural adequacy*, *insulation*, or a combination of these for a period of time under specified conditions (often in accordance with AS 1530.4).

Separating wall: A wall that is common to adjoining Class 1 buildings (see Figure 7).

Figure 7: Separating wall

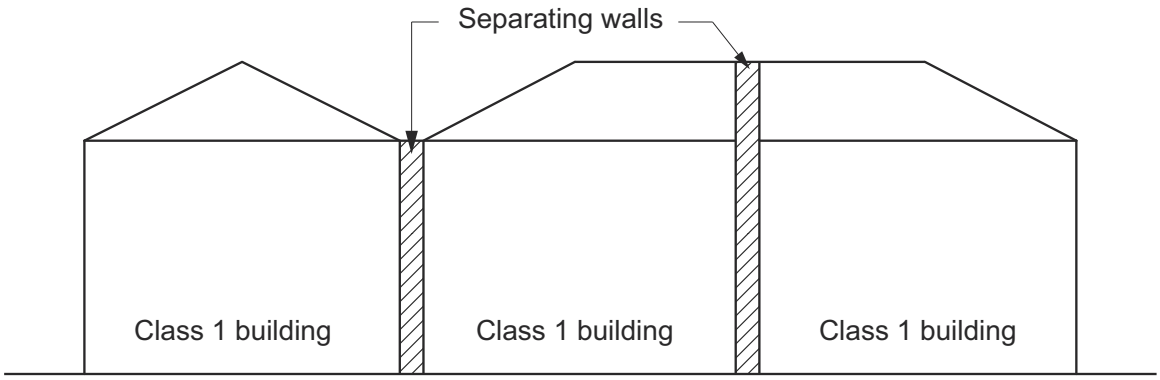

Elevation

Figure Notes

In Volume Two a separating wall may also be known as a party wall and typically is *required* to be *fire-resisting* construction (see ABCB Housing Provisions Parts 9.2 and 9.3).

Service: For the purposes of Section J in Volume One, means a mechanical or electrical system that uses energy to provide *air-conditioning*, mechanical ventilation, heated water supply, artificial lighting, vertical transport and the like within a building, but which does not include—

(a) systems used solely for emergency purposes; and

(b) cooking facilities; and

(c) portable appliances.

Service station: A garage which is not a *private garage* and is for the servicing of vehicles, other than only washing, cleaning or polishing.

Shaft: The walls and other parts of a building bounding—

(a) a well, other than an *atrium well*; or

(b) a vertical chute, duct or similar passage, but not a chimney or flue.

VIC Shared accommodation building

Shower area: The area affected by water from a shower, including a shower over a bath and for a shower area that is—

(a) Enclosed – the area enclosed by walls or screens including hinged or sliding doors that contain the spread of water to within that space; or

(b) Unenclosed – the area where, under normal use, water from the shower rose is not contained within the shower area.

Shower screen: The panels, doors or windows enclosing or partially enclosing a *shower area*.

Single leaf masonry: Outer walls constructed with a single thickness of masonry unit.

Site: The part of the allotment of land on which a building stands or is to be erected.

Sitework: Work on or around a *site*, including earthworks, preparatory to or associated with the construction, *alteration*, demolition or removal of a building.

NSW Small live music or arts venue

SA Small arts venue

Small-scale Technology Certificate: A certificate issued under the Commonwealth Government's Small-scale Renewable Energy Scheme.

Small-sized, low-speed automatic lift: A restricted use power-operated device for the infrequent raising or lowering of people with limited mobility on a platform that is controlled automatically but has the capability of being electrically isolated by a key-lockable control.

Smoke-and-heat vent: A vent, located in or near the roof for smoke and hot gases to escape if there is a fire in the building.

Smoke-Developed Index: The index number for smoke as determined by AS/NZS 1530.3.

Smoke development rate: The development rate for smoke as determined by testing flooring materials in accordance with AS ISO 9239.1.

Smoke growth rate index ($SMOGRA_{RC}$): The index number for smoke used in the regulation of *fire hazard properties* and applied to materials used as a finish, surface, lining or attachment to a wall or ceiling.

Solar admittance: The fraction of incident irradiance on a *wall-glazing construction* that adds heat to a building's space.

Sole-occupancy unit: A room or other part of a building for occupation by one or joint owner, lessee, tenant, or other occupier to the exclusion of any other owner, lessee, tenant, or other occupier and includes—

(a) a dwelling; or

(b) a room or suite of rooms in a Class 3 building which includes sleeping facilities; or

(c) a room or suite of associated rooms in a Class 5, 6, 7, 8 or 9 building; or

(d) a room or suite of associated rooms in a Class 9c building, which includes sleeping facilities and any area for the exclusive use of a resident.

NSW Spa pool

Spandrel panel: For the purposes of Section J, means the opaque part of a façade in curtain wall construction which is commonly adjacent to, and integrated with, *glazing*.

NSW Special fire protection purpose

Spiral stairway: A stairway with a circular plan, winding around a central post with steps that radiate from a common centre or several radii (see Figures 11.2.2d and 11.2.2e in the ABCB Housing Provisions).

Spread-of-Flame Index: The index number for spread of flame as determined by AS/NZS 1530.3.

Sprinkler alarm switch: For the purposes of Specification 23, a device capable of sending an electrical signal to activate an alarm when a residential sprinkler head is activated (e.g. a flow switch).

Stack bonded pier: A pier where the overlap of a masonry unit is not more than 25% of the length of the masonry unit below.

Stage: A floor or platform in a Class 9b building on which performances are presented before an audience.

Stairway platform lift: A power-operated device for raising or lowering people with limited mobility on a platform (with or without a chair) in the direction of a stairway.

Standard Fire Test: The Fire-resistance Tests of Elements of Building Construction as described in AS 1530.4.

SA Storage shed

Storey: A space within a building which is situated between one floor level and the floor level next above, or if there is no floor above, the ceiling or roof above, but not—

(a) a space that contains only—

(i) a lift *shaft*, stairway or meter room; or

(ii) a bathroom, shower room, laundry, water closet, or other *sanitary compartment*; or

(iii) accommodation intended for not more than 3 vehicles; or

(iv) a combination of the above; or

(b) a *mezzanine*.

Structural adequacy: In relation to an FRL, means the ability to maintain stability and adequate *loadbearing* capacity as determined by AS 1530.4.

Structural member: A component or part of an assembly which provides vertical or lateral support to a building or structure.

Surface water: All naturally occurring water, other than sub-surface water, which results from rainfall on or around the *site* or water flowing onto the *site*.

Swimming pool: Any excavation or structure containing water and principally used, or that is designed, manufactured or adapted to be principally used for swimming, wading, paddling, or the like, including a bathing or wading pool, or spa.

Tapered tread: A stair tread with a walking area that grows smaller towards one end.

NSW Temporary structure

TAS Temporary structure

Thermal comfort level: The level of thermal comfort in a building expressed as a *PMV* sensation scale.

Thermal energy load: The sum of the *heating load* and the *cooling load*.

Total R-Value: The sum of the *R-Values* of the individual component layers in a composite element including any building material, insulating material, airspace, thermal bridging and associated surface resistances, expressed in m^2.K/W.

Total System Solar Heat Gain Coefficient (SHGC): For the purposes of—

(a) Volume One, the fraction of incident irradiance on a *wall-glazing construction* or a *roof light* that adds heat to a building's space; or

(b) Volume Two, the fraction of incident irradiance on *glazing* or a *roof light* that adds heat to a building's space.

Total System U-Value: The thermal transmittance of the composite element allowing for the effect of any airspaces, thermal bridging and associated surface resistances, expressed in $Wm^{-2}K^{-1}$.

Treatment area: An area within a *patient care area* such as an operating theatre and rooms used for recovery, minor procedures, resuscitation, intensive care and coronary care from which a patient may not be readily moved.

Uncontrolled discharge: Any unintentional release of fluid from a *plumbing* and *drainage* system and includes leakage and seepage.

Unique wall: For the purposes of F3V1 in Volume One and H2V1 in Volume Two, a wall which is neither a *cavity wall* nor a *direct fix cladding wall*.

Unobstructed opening: For the purposes of Section 8 of the ABCB Housing Provisions, a glazed area that a person could mistake for an open doorway or clearway and walk into the glazed panel.

Unprotected water service: Unprotected water service means that the water service may be contaminated from a surrounding hazard.

Unreinforced masonry: Masonry that is not reinforced.

Vapour permeance: The degree that water vapour is able to diffuse through a material, measured in µg/N.s and tested in accordance with the ASTM-E96 Procedure B – Water Method at 23°C 50% relative humidity.

Vapour pressure: The pressure at which water vapour is in thermodynamic equilibrium with its condensed state.

Ventilation opening: An opening in the *external wall*, floor or roof of a building designed to allow air movement into or out of the building by natural means including a permanent opening, an openable part of a *window*, a door or other device which can be held open.

Verification Method: A test, inspection, calculation or other method that determines whether a *Performance Solution* complies with the relevant *Performance Requirements*.

Vessel: For the purposes of Volume One and Part 10.2 of the ABCB Housing Provisions, an open, pre-formed, pre-finished concave receptacle capable of holding water, usually for the purpose of washing, including a basin, sink, bath, laundry tub and the like.

Visibility: The maximum distance at which an object of defined size, brightness and contrast can be seen and recognised.

Voltage: A difference of potential, measured in Volts (V) and includes *extra-low voltage* and *low voltage*.

Volume: In relation to—

(a) a building — the volume of the total space of the building measured above the lowest floor (including, for a suspended floor, any subfloor space), over the enclosing walls, and to the underside of the roof covering; or

(b) a *fire compartment* — the volume of the total space of the *fire compartment* measured within the inner finished surfaces of the enclosing *fire-resisting* walls and/or floors, and—

(i) if there is no *fire-resisting* floor at the base of the *fire compartment*, measured above the finished surface of the lowest floor in the *fire compartment*; and

(ii) if there is no *fire-resisting* floor at the top of the *fire compartment*, measured to the underside of the roof covering of the *fire compartment*; and

(iii) if there is no *fire-resisting* wall, measured over the enclosing wall and if there is no enclosing wall, includes any space within the *fire compartment* that has a use which contributes to the *fire load*; or

(c) an *atrium* — the volume of the total space of the *atrium* measured within the finished surfaces of the bounding construction and if there is no bounding construction, within the *external walls*.

Waffle raft: A stiffened raft with closely spaced ribs constructed on the ground and with slab panels supported between ribs.

Wall-glazing construction: For the purposes of Section J in Volume One, the combination of wall and *glazing* components comprising the *envelope* of a building, excluding—

(a) *display glazing*; and

(b) opaque non-glazed openings such as doors, vents, penetrations and shutters.

Ward area: That part of a *patient care area* for resident patients and may contain areas for accommodation, sleeping, associated living and nursing facilities.

Water control layer: A *pliable building membrane* or the exterior cladding when no *pliable building membrane* is present.

WaterMark Certification Scheme: The ABCB scheme for certifying and authorising *plumbing* and *drainage products*.

WaterMark Conformity Assessment Body (WMCAB): A conformity assessment body registered with and accredited by the *JAS-ANZ* to conduct evaluations leading to *product* certification and contracted with the *administering body* to issue the *WaterMark Licence*.

WaterMark Licence: A licence issued by a *WaterMark Conformity Assessment Body*.

WaterMark Schedule of Excluded Products: The list maintained by the *administering body* of *products* excluded from the *WaterMark Certification Scheme*.

WaterMark Schedule of Products: The list maintained by the *administering body* of *products* included in the *WaterMark Certification Scheme*, and the specifications to which the *products* can be certified.

Explanatory Information

The *WaterMark Schedule of Products* and the *WaterMark Schedule of Excluded Products* can be viewed on the ABCB website at www.abcb.gov.au.

Waterproof: The property of a material that does not allow water to penetrate through it.

Waterproofing system: A combination of elements that are *required* to achieve a *waterproof* barrier as *required* by H4D2 and H4D3 including substrate, *membrane*, bond breakers, sealants, finishes and the like.

Water resistant: The property of a system or material that restricts water movement and will not degrade under conditions of water.

Water sensitive materials: Materials that have an inherent capacity to absorb water vapour and include timber, plasterboard, plywood, oriented strand board and the like.

Waterstop: A vertical extension of the *waterproofing system* forming a barrier to prevent the passage of water in a floor or other horizontal surfaces.

Watertight: Will not allow water to pass from the inside to the outside of the component or joint and vice versa.

Weighted average: Is calculated across the *wetted surface area* of a pipe, pipe fitting or plumbing fixture.

WA WELS

Wet area: An area within a building supplied with water from a water supply system, which includes bathrooms, showers, laundries and *sanitary compartments* and excludes kitchens, bar areas, kitchenettes or domestic food and beverage preparation areas.

Wetted surface area: Is calculated by the total sum of diameter (D) in contact with *drinking water*.

Winders: Treads within a straight *flight* that are used to change direction of the stair (see Explanatory Figure 1).

Window: Includes a *roof light*, glass panel, glass block or brick, glass louvre, glazed sash, glazed door, or other device which transmits natural light directly from outside a building to the room concerned when in the closed position.

Yield: The mass of a combustion product generated during combustion divided by the mass loss of the test specimen as specified in the *design fire*.

Zone protection: The installation of a *backflow prevention device* at the point where a water service is connected to multiple fixtures or appliances, with no *backflow prevention device* installed as *individual protection* downstream of this point.

Schedule 2 Referenced documents

Referenced documents

Referenced documents

The Standards and other documents listed in this Schedule are referenced in the NCC.

Table 1: Schedule of referenced documents

No.	Date	Title	Volume One	Volume Two	Housing Provisions	Volume Three
AS/NZS ISO 717 Part 1	2004	Acoustics — Rating of sound insulation in buildings and of building elements — Airborne sound insulation. (See Note 1)	F7V1, F7V2, F7V3, F7V4, F7D3	H4V4	10.7.2	N/A
AS ISO 717 Part 2	2004	Acoustics — Rating of sound insulation in buildings and of building elements — Impact sound insulation	F7V1, F7V3, F7D4	N/A	N/A	N/A
AS 1056 Part 1	1991	Storage water heaters — General requirements (incorporating amendments 1, 2, 3, 4 and 5)	N/A	N/A	N/A	B2D2
AS/NZS 1170 Part 0	2002	Structural design actions — General principles (incorporating amendments 1, 3 and 4)	B1V1, B1D2, Spec 4	H1V1, H1D7	2.2.2	N/A
AS/NZS 1170 Part 1	2002	Structural design actions — Permanent, imposed and other actions (incorporating amendments 1 and 2)	B1D3	N/A	2.2.3, 2.2.4, 8.3.1, 11.2.2, 11.2.3, 11.3.4	N/A
AS/NZS 1170 Part 2	2021	Structural design actions — Wind actions	B1D3, B1D4, Spec 4, F3V1, Schedule 1	H1D7, H2V1, Schedule 1	2.2.3, Schedule 1	Schedule 1
AS/NZS 1170 Part 3	2003	Structural design actions — Snow and ice actions (incorporating amendments 1 and 2)	B1D3	N/A	2.2.3	
AS 1170 Part 4	2007	Structural design actions — Earthquake actions in Australia (incorporating amendments 1 and 2)	B1D3	H1D4, H1D5, H1D6, H1D9	2.2.3	N/A
AS 1191	2002	Acoustics — Method for laboratory measurement of airborne sound transmission insulation of building elements	Spec 29	N/A	N/A	N/A
AS 1273	1991	Unplasticized PVC (UPVC) downpipe and fittings for rainwater	N/A	N/A	7.4.2	N/A
AS 1288	2021	Glass in buildings — Selection and installation	B1D4, Spec 11, Spec 12	H1D8	8.3.1	N/A
AS 1289.6.3.3	1997	Methods of testing soils for engineering purposes — Method 6.3.3: Soil strength and consolidation tests — Determination of the penetration resistance of a soil — Perth sand penetrometer test (incorporating amendment 1)	N/A	N/A	4.2.4	N/A

No.	Date	Title	Volume One	Volume Two	Housing Provisions	Volume Three
AS 1397	2021	Continuous hot-dip metallic coated steel sheet and strip — Coatings of zinc and zinc alloyed with aluminium and magnesium (See Note 10)	N/A	N/A	7.2.2	N/A
AS 1428 Part 1	2009	Design for access and mobility — General requirements for access — New building work (incorporating amendments 1 and 2)	D3D11, D3D16, D3D22, D4D2, D4D3, D4D4, D4D7, D4D10, D4D11, D4D13, Spec 16, E3D10, F4D5, G4D5, Schedule 1	Schedule 1	Schedule 1	Schedule 1, E1D2
AS 1428 Part 1	2001	Design for access and mobility — General requirements for access — New building work	I2D7, I2D8, I2D10, I2D15	N/A	N/A	E1D2
AS 1428 Part 1 (Supplement 1)	1993	Design for access and mobility — General requirements for access — Buildings — Commentary	I2D2	N/A	N/A	N/A
AS 1428 Part 2	1992	Design for access and mobility — Enhanced and additional requirements — Buildings and facilities	I2D2, I2D3, I2D4, I2D5, I2D7, I2D10, I2D11, I2D12, I2D13, I2D14	N/A	N/A	E1D2
AS 1428 Part 4	1992	Design for access and mobility — Tactile ground surface indicators for the orientation of people with vision impairment	I2D11	N/A	N/A	N/A
AS/NZS 1428 Part 4.1	2009	Design for access and mobility — Means to assist the orientation of people with vision impairment — Tactile ground surface indicators (incorporating amendments 1 and 2)	D4D9	N/A	N/A	N/A
AS 1530 Part 1	1994	Methods for fire tests on building materials, components and structures — Combustibility test for materials	Schedule 1	Schedule 1	Schedule 1	Schedule 1
AS 1530 Part 2	1993	Methods for fire tests on building materials, components and structures — Test for flammability of materials (incorporating amendment 1)	Schedule 1	Schedule 1	Schedule 1	Schedule 1

No.	Date	Title	Volume One	Volume Two	Housing Provisions	Volume Three
AS/NZS 1530 Part 3	1999	Methods for fire tests on building materials, components and structures — Simultaneous determination of ignitability, flame propagation, heat release and smoke release	Schedule 1, Spec 3	Schedule 1, Spec 3	Schedule 1	Schedule 1, Spec 3
AS 1530 Part 4	2014	Methods for fire tests on building materials, components and structures — Fire resistance tests for elements of construction	C4D15, C4D16, Spec 9, Spec 10, Spec 13, Spec 14, Schedule 1, Spec 3	9.3.2, Schedule 1, Spec 3	Schedule 1	Schedule 1, Spec 3
AS 1530 Part 8.1	2018	Methods for fire tests on building materials, components and structures — Tests on elements of construction for buildings exposed to simulated bushfire attack — Radiant heat and small flaming sources	Spec 43	N/A	N/A	N/A
AS/NZS 1546 Part 1	2008	On-site domestic wastewater treatment units - Septic tanks	N/A	N/A	N/A	C3D2
AS/NZS 1546 Part 2	2008	On-site domestic wastewater treatment units - Waterless composting toilets	N/A	N/A	N/A	C3D3
AS 1546 Part 3	2017	On-site domestic wastewater treatment units - Secondary treatment systems (incorporating amendment 1)	N/A	N/A	N/A	C3D4
AS 1546 Part 4	2016	On-site domestic wastewater treatment units - Domestic greywater treatment systems	N/A	N/A	N/A	C3D5
AS/NZS 1547	2012	On-site domestic wastewater management	N/A	N/A	N/A	C3D6
AS 1562 Part 1	2018	Design and installation of sheet roof and wall cladding — Metal (See Note 2)	B1D4, F3D2, F3D5	H1D7	N/A	N/A
AS1562 Part 3	2006	Design and installation of sheet roof and wall cladding — Plastic	B1D4, F3D2	H1D7	N/A	N/A
AS 1657	2018	Fixed platforms, walkways, stairways and ladders — Design, construction and installation	D2D21, D2D22, D3D23, I1D6, I3D5	N/A	N/A	N/A
AS/NZS 1664 Part 1	1997	Aluminium structures — Limit state design (incorporating amendment 1)	B1D4	N/A	2.2.4	N/A
AS/NZS 1664 Part 2	1997	Aluminium structures — Allowable stress design (incorporating amendment 1)	B1D4	N/A	2.2.4	N/A

No.	Date	Title	Volume One	Volume Two	Housing Provisions	Volume Three
AS 1668 Part 1	2015	The use of ventilation and air conditioning in buildings — Fire and smoke control in buildings (incorporating amendment 1)	C3D13, C4D15, Spec 11, D2D12, Spec 19, E2D3, E2D4, E2D6, E2D7, E2D8, E2D9, E2D11, E2D12, E2D13, E2D16, E2D17, E2D19, F6D12, Spec 21, Spec 31	N/A	N/A	N/A
AS 1668 Part 2	2012	The use of ventilation and air conditioning in buildings — Mechanical ventilation in buildings (incorporating amendments 1 and 2)	E2D12, F6V1, F6D6, F6D11, F6D12, F8D4, J6D4	H4V3, H4D7	10.8.2	N/A
AS 1668 Part 4	2012	The use of ventilation and air conditioning in buildings — Natural ventilation of buildings	F6D11	N/A	N/A	N/A
AS 1670 Part 1	2018	Fire detection, warning, control and intercom systems — System design, installation and commissioning — Fire (incorporating amendment 1) (See Note 3)	C4D6, C4D7, C4D8, C4D9, C4D12, D3D26, E2D3, E2D10, G4D7, Spec 12, Spec 20, Spec 23, Spec 31	N/A	9.5.1	N/A
AS 1670 Part 3	2018	Fire detection, warning, control and intercom systems — System design, installation and commissioning — Fire alarm monitoring (incorporating amendment 1) (See Note 3)	Spec 20, Spec 23	N/A	N/A	N/A
AS 1670 Part 4	2018	Fire detection, warning, control and intercom systems — System design, installation and commissioning — Emergency warning and intercom systems (incorporating amendment 1) (See Note 3)	E3V2, E4D9, Spec 31	N/A	N/A	N/A
AS/NZS 1680 Part 0	2009	Interior lighting — Safe movement	F6D5	N/A	10.5.2	N/A
AS 1684 Part 2	2021	Residential timber-framed construction — Non-cyclonic areas	B1D4, B1D5, F1D8	H1D6	2.2.5, 4.2.13, 5.6.6, 6.2.1, 6.3.6, 7.5.2, 7.5.3, 7.5.4, 10.2.19, 10.2.20	N/A

No.	Date	Title	Volume One	Volume Two	Housing Provisions	Volume Three
AS 1684 Part 3	2021	Residential timber-framed construction — Cyclonic areas	B1D4, B1D5, F1D8	H1D6	2.2.5, 4.2.13, 5.6.6, 6.2.1, 6.3.6, 7.5.2, 7.5.3, 7.5.4, 10.2.19, 10.2.20	N/A
AS 1684 Part 4	2010	Residential timber-framed construction — Simplified — Non-cyclonic areas (incorporating amendment 1)	B1D4, B1D5, F1D8	H1D6	2.2.5, 4.2.13, 5.6.6, 6.2.1, 7.5.2, 7.5.3, 7.5.4, 10.2.19, 10.2.20	N/A
AS 1720 Part 1	2010	Timber structures — Design methods (incorporating amendments 1, 2 and 3)	B1V1, B1D4	H1V1, H1D6	4.2.13, 5.3.3	N/A
AS/NZS 1720 Part 4	2019	Timber structures — Fire resistance of timber elements	Spec 1	Spec 1	N/A	Spec 1
AS 1720 Part 5	2015	Timber structures — Nailplated timber roof trusses (incorporating amendment 1)	B1D4	H1D6	N/A	N/A
AS 1735 Part 11	1986	Lifts, escalators and moving walks — Fire rated landing doors	C4D11	N/A	N/A	N/A
AS 1735 Part 12	1999	Lifts, escalators and moving walks — Facilities for persons with disabilities (incorporating amendment 1)	E3D8, I2D6	N/A	N/A	N/A
AS/NZS 1859 Part 4	2018	Reconstituted wood based panels — Specifications — Wet process fibreboard	N/A	N/A	7.5.3, 7.5.4	N/A
AS 1860 Part 2	2006	Particleboard flooring — Installation (incorporating amendment 1)	B1D4	H1D6	N/A	N/A
AS 1905 Part 1	2015	Components for the protection of openings in fire-resistant walls — Fire-resistant doorsets (incorporating amendment 1)	C4D7, Spec 12	N/A	N/A	N/A
AS 1905 Part 2	2005	Components for the protection of openings in fire-resistant walls — Fire-resistant roller shutters	Spec 12	N/A	N/A	N/A
AS 1926 Part 1	2012	Swimming pool safety — Safety barriers for swimming pools	G1D2, G1D4	H7D2	N/A	N/A
AS 1926 Part 2	2007	Swimming pool safety — Location of safety barriers for swimming pools (incorporating amendments 1 and 2)	G1D2	H7D2	N/A	N/A
AS 1926 Part 3	2010	Swimming pool safety — Water recirculation systems (incorporating amendment 1)	G1D2	H7D2	N/A	N/A

No.	Date	Title	Volume One	Volume Two	Housing Provisions	Volume Three
AS 2047	2014	Windows and external glazed doors in buildings (incorporating amendments 1 and 2) (See Note 4)	B1D4, F3V1, F3D4, J5D5	H1D8, H2V1	13.4.4	N/A
AS 2049	2002	Roof tiles (incorporating amendment 1)	F3D2	H1D7	N/A	N/A
AS 2050	2018	Installation of roof tiles	B1D4, F3D2	H1D7	7.3.2	N/A
AS 2118 Part 1	2017	Automatic fire sprinkler systems — General systems (incorporating amendments 1 and 2)	C1V3, Spec 17, Spec 18	N/A	N/A	N/A
AS 2118 Part 4	2012	Automatic fire sprinkler systems — Sprinkler protection for accommodation buildings not exceeding four storeys in height	Spec 17, Spec 18	N/A	N/A	B4D3
AS 2118 Part 5	2008 (R 2020)	Automatic fire sprinkler systems - Home fire sprinkler systems	N/A	N/A	N/A	B4D3
AS 2118 Part 6	2012	Automatic fire sprinkler systems — Combined sprinkler and hydrant systems in multistorey buildings	Spec 17	N/A	N/A	B4D3
AS 2159	2009	Piling — Design and installation (incorporating amendment 1)	B1D4	H1D12	N/A	N/A
AS/NZS 2179 Part 1	2014	Specifications for rainwater goods, accessories and fasteners — Metal shape or sheet rainwater goods, and metal accessories and fasteners	N/A	N/A	7.4.2	N/A
AS/NZS 2269 Part 0	2012	Plywood — Structural — Specifications (incorporating amendment 1)	N/A	N/A	7.5.4	N/A
AS/NZS 2293 Part 1	2018	Emergency lighting and exit signs for buildings — System design, installation and operation (incorporating amendment 1)	E4D4, E4D8, Spec 25, I3D15	N/A	N/A	N/A
AS 2312 Part 1	2014	Guide to the protection of structural steel against atmospheric corrosion by the use of protective coatings — Paint coatings	N/A	N/A	6.3.9	N/A
AS/NZS 2312 Part 2	2014	Guide to the protection of structural steel against atmospheric corrosion by the use of protective coatings — Hot dip galvanizing	N/A	N/A	6.3.9	N/A
AS/NZS 2327	2017	Composite structures — Composite steel-concrete construction in buildings (incorporating amendment 1)	B1D4, Spec 1	Spec 1	2.2.4	Spec 1

No.	Date	Title	Volume One	Volume Two	Housing Provisions	Volume Three
AS 2419 Part 1	2021	Fire hydrant installations — System design, installation and commissioning	C3D13, E1D2, Spec 18, I3D9	N/A	N/A	B4D4
AS 2441	2005	Installation of fire hose reels (incorporating amendment 1)	E1D3	N/A	N/A	B4D5
AS 2444	2001	Portable fire extinguishers and fire blankets — Selection and location	E1D14, I3D11	N/A	N/A	N/A
AS 2665	2001	Smoke/heat venting systems — Design, installation and commissioning	Spec 22, Spec 31	N/A	N/A	N/A
AS 2699 Part 1	2020	Built-in components for masonry construction — Wall ties (See Note 9)	C2D10	N/A	5.6.5	N/A
AS 2699 Part 3	2020	Built-in components for masonry construction — Lintels and shelf angles (durability requirements) (See Note 9)	C2D10	N/A	5.6.7	N/A
AS 2870	2011	Residential slabs and footings	F1D7	H1D4, H1D5	3.4.2, 4.2.2, 4.2.6, 4.2.8, 4.2.11, 4.2.14, 4.2.15, 10.2.9	N/A
AS/NZS 2890 Part 6	2009	Parking facilities — Offstreet parking for people with disabilities	D4D6	N/A	N/A	N/A
AS/NZS 2904	1995	Damp-proof courses and flashings (incorporating amendments 1 and 2)	F1D6	N/A	5.7.3, 7.5.6, 12.3.3	N/A
AS/NZS 2908 Part 1	2000	Cellulose-cement products — Corrugated sheets	B1D4	N/A	N/A	N/A
AS/NZS 2908 Part 2	2000	Cellulose-cement products — Flat sheets	Schedule 1	Schedule 1	7.5.3, 7.5.4, 7.5.5, 10.2.9,10.2.10, Schedule 1	Schedule 1
AS/NZS 2918	2018	Domestic solid fuel burning appliances — Installation (See Note 8)	G2D2	H7D5	12.4.4, 12.4.5	N/A
AS/NZS 3013	2005	Electrical installations — Classification of the fire and mechanical performance of wiring system elements	C3D14	N/A	N/A	N/A
AS/NZS 3500 Part 0	2021	Plumbing and drainage — Glossary of terms	A1G4	A1G4	N/A	A1G4
AS/NZS 3500 Part 1	2018	Plumbing and drainage — Water services	N/A	N/A	N/A	B5D6

No.	Date	Title	Volume One	Volume Two	Housing Provisions	Volume Three
AS/NZS 3500 Part 1	2021	Plumbing and drainage — Water services	N/A	N/A	N/A	B1D3, B1D5, B1D6, B3D3, B5V1, B5D2, B5D3, B5D4, Spec 41, B6D2, B6D3, B6D5, B7D3,
AS/NZS 3500 Part 2	2021	Plumbing and drainage — Sanitary plumbing and drainage (incorporating amendment 1)	N/A	N/A	N/A	C1D3, C1V1, C1V2, C1V3, C1V4, C1V5, C2V2, C2D3, C2D4, C3D7
AS/NZS 3500 Part 3	2021	Plumbing and drainage — Stormwater drainage (See Note 11)	F1D3	H2D2, H2D6	7.4.3	N/A
AS/NZS 3500 Part 4	2021	Plumbing and drainage — Heated water services (incorporating amendment 1)	N/A	N/A	N/A	B2D2, B2D6, B2D7, B2D8, B2D9, B2D11
AS 3600	2018	Concrete structures (incorporating amendments 1 and 2)	B1V1, B1D4, Spec 1	H1V1, H1D4, Spec 1	3.4.2, 4.2.6, 4.2.10, 4.2.13, 5.3.3, 10.2.9	Spec 1
AS 3660 Part 1	2014	Termite management — New building work (incorporating amendment 1)	B1D4, F1D6	N/A	3.4.1, 3.4.2	N/A
AS 3660 Part 3	2014	Termite management — Assessment criteria for termite management systems	N/A	N/A	3.4.2	N/A
AS/NZS 3666 Part 1	2011	Air-handling and water systems of buildings — Microbial control — Design, installation and commissioning	F4D10, F6D6	N/A	N/A	N/A
AS 3700	2018	Masonry structures	B1D4, F3D5, Spec 1, Spec 2	H1D5, H2D4, Spec 1, Spec 2	5.3.3, 5.4.2, 5.6.3, 6.3.6, 10.2.9, 10.2.19, 10.2.20, 12.4.3	Spec 1, Spec 2
AS 3740	2021	Waterproofing of domestic wet areas	F2D2	H4D2, H4D3	10.2.20	N/A
AS 3786	2014	Smoke alarms using scattered light, transmitted light or ionization (incorporating amendment 1 and 2) (See Note 5)	Spec 20	N/A	9.5.1	N/A
AS/NZS 3823 Part 1.2	2012	Performance of electrical appliances — Air conditioners and heat pumps — Ducted air conditioners and air-to-air heat pumps — Testing and rating for performance	Spec 33, J6D12	N/A	N/A	N/A

No.	Date	Title	Volume One	Volume Two	Housing Provisions	Volume Three
AS 3959	2018	Construction of buildings in bushfire-prone areas (incorporating amendments 1 and 2)	C2D14, F8D5, G5D2, G5D3, Spec 43	H7D4	10.8.3	B1D4, B2D10, B3D4, C1D4, C2D5
AS/NZS 4020	2018	Testing of products for use in contact with drinking water (See Note 6)	A5G4	A5G4	N/A	A5G4
AS 4055	2021	Wind loads for housing	Schedule 1	H1D6, H1D8, Schedule 1	2.2.3, Schedule 1	Schedule 1
AS 4072 Part 1	2005	Components for the protection of openings in fire-resistant separating elements — Service penetrations and control joints (incorporating amendment 1)	C4D15, C4D16	N/A	9.3.2	N/A
AS 4100	2020	Steel structures	B1D4, Spec 1	H1D6, Spec 1	4.2.13, 5.6.7	Spec 1
AS 4200 Part 1	2017	Pliable building membranes and underlays — Materials (incorporating amendment 1)	F3D3, F8D3, Spec 36, Schedule 1	Schedule 1	7.3.4, 7.5.2, 7.5.8, 10.8.1, Schedule 1	Schedule 1
AS 4200 Part 2	2017	Pliable building membranes and underlays — Installation requirements (incorporating amendments 1 and 2)	F3D3, F8D3	N/A	10.8.1	N/A
AS/NZS 4234	2021	Heated water systems — Calculation of energy consumption	Spec 45	N/A	N/A	B2D2
AS 4254 Part 1	2021	Ductwork for air-handling systems in buildings — Flexible duct	Spec 7, J6D7	H3D2	13.7.4	N/A
AS 4254 Part 2	2012	Ductwork for air-handling systems in buildings — Rigid duct	Spec 7, J6D5, J6D7	N/A	13.7.4	N/A
AS/NZS 4284	2008	Testing of building facades	F3V1	H2V1	N/A	N/A
AS/NZS 4505	2012	Garage doors and other large access doors (incorporating amendment 1)	B1D4	N/A	2.2.4	N/A
AS 4552	2005	Gas fired water heaters for hot water supply and/or central heating	N/A	N/A	N/A	B2D2
AS 4586	2013	Slip resistance classification of new pedestrian surface materials (incorporating amendment 1) (See Note 7)	D3D11, D3D14, D3D15. Spec 27	N/A	11.2.4	N/A
AS 4597	1999	Installation of roof slates and shingles (Non-interlocking type)	B1D4, F3D2	H1D7	N/A	N/A
AS/NZS 4600	2018	Cold-formed steel structures	B1D4, Spec 1	H1D6, Spec 1	5.3.3, 6.3.6	Spec 1

No.	Date	Title	Volume One	Volume Two	Housing Provisions	Volume Three
AS 4654 Part 1	2012	Waterproofing membranes for external above-ground use — Materials	F1D5	H2D8	N/A	N/A
AS 4654 Part 2	2012	Waterproofing membranes for external above-ground use — Design and installation	C2D14, F1D4, F1D5	H2D8	N/A	N/A
AS 4678	2002	Earth-retaining structures	N/A	H1D3	N/A	N/A
AS 4773 Part 1	2015	Masonry in small buildings — Design (incorporating amendment 1)	N/A	H1D5, H2D4	5.6.3, 12.4.3	N/A
AS 4773 Part 2	2015	Masonry in small buildings — Construction (incorporating amendment 1)	N/A	H1D5, H2D4	5.6.3, 12.4.3	N/A
AS/NZS 4859 Part 1	2018	Thermal insulation materials for buildings — General criteria and technical provisions	J4D3, J6D6, J6D9	N/A	13.2.2, 13.7.2, 13.7.4	N/A
AS/NZS 4859 Part 2	2018	Thermal insulation materials for buildings — Design	J3D8, J4D3, Spec 36, Spec 37	N/A	13.2.5, 13.2.6	N/A
AS/NZS 4858	2004	Wet area membranes	N/A	N/A	10.2.8	N/A
AS 5113	2016	Classification of external walls of buildings based on reaction-to-fire performance (incorporating amendment 1)	C1V3	N/A	N/A	N/A
AS 5146 Part 1	2015	Reinforced autoclaved aerated concrete — Structures (incorporating amendment 1)	B1D4	H1D7	N/A	N/A
AS 5146 Part 3	2018	Reinforced autoclaved aerated concrete — Construction	B1D4, F3D5	N/A	N/A	N/A
AS 5216	2021	Design of post-installed and cast-in fastenings in concrete	B1D4	N/A	2.2.4	N/A
AS/NZS 5601 Part 1	2013	Gas installations — General installations	J1V4	H6V3	N/A	N/A
AS 5637 Part 1	2015	Determination of fire hazard properties — Wall and ceiling linings	Spec 7, Schedule 1	Schedule 1	Schedule 1	Schedule 1
AS ISO 9239 Part 1	2003	Reaction to fire tests for floorings — Determination of the burning behaviour using a radiant heat source	Schedule 1	Schedule 1	Schedule 1	Schedule 1
AS/NZS ISO 9972	2015	Thermal performance of buildings — Determination of air permeability of buildings — Fan pressurization method	J1V4	H6V3	N/A	N/A
AIRAH-DA07	2021	Criteria for moisture control design analysis in buildings	F8V1	H4V5	N/A	N/A

No.	Date	Title	Volume One	Volume Two	Housing Provisions	Volume Three
AIRAH-DA09	1998	Air conditioning load estimation	Spec 35	N/A	N/A	N/A
AIRAH-DA28	2011	Building management and control systems	Spec 34	N/A	N/A	N/A
ANSI/ASHRAE Standard 55	2013	Thermal environmental conditions for human occupancy	Schedule 1	Schedule 1	Schedule 1	Schedule 1
ANSI/ASHRAE Standard 140	2007	Standard method of test for the evaluation of building energy analysis computer programs	J1V1, J1V2, J1V3, J1V5	H6V2	N/A	N/A
ASTM E2073-10	2010	Standard Test Method for Photopic Luminance of Photoluminescent (Phosphorescent) Markings	Spec 25	N/A	N/A	N/A
ASTM E72-15	2015	Standard Test Methods of Conducting Strength Tests of Panels for Building Construction	Spec 6	N/A	N/A	N/A
ASTM E695-03	2003	Standard Test Method of Measuring Relative Resistance of Wall, Floor and Roof Construction to Impact Loading	Spec 6	N/A	N/A	N/A
ASTM E96	2016	Standard Test Methods for Water Vapor Transmission of Materials	Schedule 1	Schedule 1	Schedule 1	Schedule 1
AHRI 460	2005	Performance rating of remote mechanical-draft air-cooled refrigerant condensers	J6D13	N/A	N/A	N/A
AHRI 551/591	2015	Performance rating of water-chilling and heat pump water-heating packages using the vapor compression cycle.	Spec 33, J6D11	N/A	N/A	N/A
ABCB	2022	Fire Safety Verification Method	C1V4	N/A	N/A	N/A
ABCB	2022	Housing Provisions Standard	N/A	Throughout	Throughout	N/A
ABCB	2022	Livable Housing Design	G7D2	H4D3, H8D2	3.3.3, 11.2.3	N/A
ABCB	2011	Protocol for Structural Software, Version 2011.2	B1D5	H1D6	2.2.5	N/A
ABCB	2012	Standard for Construction of Buildings in Flood Hazard Areas, Version 2012.3	B1D6	H1D10	N/A	N/A
ABCB	2022	Standard for NatHERS Heating and Cooling Load Limits, Version 2022.1	J3D3	Spec 42	N/A	N/A
ABCB	2022	Standard for Whole-of-Home Efficiency Factors	J3D14	N/A	13.6.2	N/A
CIBSE Guide A	2015	Environmental design	Spec 34, Spec 35, J4D3, J4D7	N/A	N/A	N/A

No.	Date	Title	Volume One	Volume Two	Housing Provisions	Volume Three
N/A	2002	Disability Standards for Accessible Public Transport	F4D12, I2D1	N/A	N/A	N/A
N/A	2010	Education and Care Services National Law Act (Vic)	Schedule 1	Schedule 1	Schedule 1	Schedule 1
European Union Commission Regulation 547/2012	2012	Eco-design requirements for water pumps	J6D8	N/A	N/A	N/A
European Union Commission Regulation 622/Annexx II, point 2	2012	Eco-design requirements for glandless standalone circulators and glandless circulators integrated in products	J6D8	N/A	N/A	N/A
FPAA101D	2021	Automatic Fire Sprinkler System Design and Installation — Drinking Water Supply	C1V3, C2D6, C2D13, C3D2, C3D7, C3D8, C4D6, C4D7, C4D8, C4D9, C4D12, Spec 5, Spec 7, D2D4, D2D17, D3D26, D3D30, E2D8, E2D9, E2D13, E2D14, E2D15, E2D16, E2D17, E2D19, E2D20, Spec 17, Spec 18, Spec 20, G3D1, G3D6, Spec 31, I1D2, Schedule 1	Schedule 1	Schedule 1	B4D3, Schedule 1, B1D5

No.	Date	Title	Volume One	Volume Two	Housing Provisions	Volume Three
FPAA101H	2018	Automatic Fire Sprinkler System Design and Installation — Hydrant Water Supply (incorporating amendment 1)	C1V3, C2D6, C2D13, C3D2, C3D7, C3D8, Spec 5, Spec 7, Spec 17, Spec 18, E2D8, E2D9, E2D13, E2D14, E2D15, E2D16, E2D17, E2D19, E2D20, Spec 20, G3D1, G3D6, Spec 31, I1D2	N/A	N/A	B4D3
ISO 140 Part 6	1998E	Acoustics — Measurement of sound insulation in buildings and of building elements — Laboratory measurements of impact sound insulation of floors	Spec 29	N/A	N/A	N/A
ISO 540	2008	Hard coal and coke — Determination of ash fusibility	Spec 13	N/A	N/A	N/A
ISO 8336	1993E	Fibre-cement flat sheets	Schedule 1	Schedule 1	7.5.3, 7.5.4, 7.5.5, Schedule 1	Schedule 1
ISO 25745 Part 2	2015	Energy performance of lifts, escalators and moving walks: Energy calculation and classification for lifts (elevators)	J7D8	N/A	N/A	N/A
NASH Standard	2021	Steel Framed Construction in Bushfire Areas	N/A	H7D4	N/A	N/A
NASH Standard Part 1	2005	Residential and Low Rise Steel Framing — Design Criteria (incorporating amendments A, B and C)	B1D4	H1D6	N/A	N/A
NASH Standard Part 2	2014	Residential and Low Rise Steel Framing — Design Solutions (incorporating amendment A)	B1D4, B1D5, F1D8	H1D6	2.2.5, 6.2.1, 6.3.6, 7.5.2, 7.5.3, 7.5.4, 10.2.19, 10.2.20	N/A
NSF/ ANSI/ CAN 372	2020	Drinking Water System Components - Lead Content	A5G4	A5G4	N/A	A5G4
N/A	N/A	Northern Territory Deemed to Comply Standards Manual	N/A	N/A	2.2.4	N/A
SA TS 5344	2019	Permanent labelling for Aluminium Composite Panel (ACP) products	A5G8	A5G8	N/A	A5G8
TN 61	N/A	Cement Concrete and Aggregates Australia — Technical note — Articulated walling	N/A	H1D4	N/A	N/A

No.	Date	Title	Volume One	Volume Two	Housing Provisions	Volume Three
WMK NOD 2021/4.2	2021	WaterMark Notice of Direction 2021/4.2 Certification transition arrangements for lead free plumbing products	A5G4	A5G4	N/A	A5G4

Table Notes

(1) For AS/NZS ISO 717.1:

(a) Test reports based on AS 1276—1979 and issued prior to AS/NZS 1276.1—1999 being referenced in the NCC remain valid.

(b) The STC values in reports based on AS 1276—1979 must be considered to be equivalent to Rw values.

(c) Test reports based on AS/NZS 1276.1 prepared after the NCC reference date for AS/NZS 1276.1—1999 must be based on that version.

(d) Test reports based on ISO 717-1—1996 and issued prior to AS/NZS ISO 717.1—2004 being referenced in the NCC remain valid.

(e) Reports based on AS/NZS ISO 717.1 relating to tests carried out after the NCC reference date for AS/NZS ISO 717.1—2004 must relate to the amended Standard.

(2) For AS 1562.1, tests carried out based on AS 1562.1—1992 and issued prior to AS 1562.1—2018 being referenced in the NCC remain valid. Reports relating to tests carried out after the NCC reference date for AS 1562.1 must relate to the revised Standard.

(3) For AS 1670.1, AS 1670.3 and AS1670.4, notwithstanding A4G1(5), until the adoption of NCC 2025 the editions of the documents listed in Table 1.8 of AS 1670.1, AS 1670.3 and AS 1670.4 may be used to meet the requirements of AS 1670.1, AS 1670.3 and AS 1670.4 as applicable.

(4) For AS 2047:

(a) Tests carried out under earlier editions of AS 2047 remain valid.

(b) Reports based on AS 2047 relating to tests carried out after the NCC reference date for AS 2047—2014 Amendment 2 must relate to the amended Standard.

(5) For AS 3786:

(a) Tests carried out under AS 3786—2014 Amendment 1 remain valid.

(b) Reports based on AS 3786 relating to tests carried out after the NCC reference date for AS 3786—2014 Amendment 2 must relate to the amended Standard.

(6) Test reports based on the 2005 edition of AS/NZS 4020 will continue to be accepted until 1 May 2024. Test reports prepared after the NCC reference date for the 2018 edition of AS/NZS 4020 must be based on the 2018 edition.

(7) For AS 4586:

(a) Test reports based on the 2004 edition of AS/NZS 4586 and issued prior to the 2013 edition of AS 4586 being referenced in the NCC remain valid.

(b) Test reports prepared after the NCC reference date of the 2013 edition of AS 4586 must be based on that version.

(c) For the purposes of assessing compliance, the slip-resistance classifications of V, W and X in reports based on the 2004 edition of AS/NZS 4586 may be considered to be equivalent to slip-resistance classifications of P5, P4 and P3 respectively in the 2013 edition of AS 4586.

(d) Test reports based on Appendix D of AS 4586—2013 and issued prior to the NCC reference date for AS 4586—2013 (incorporating Amendment 1) remain valid.

(e) Test reports based on Appendix D of AS 4586—2013 and prepared after the NCC reference date for AS 4586—2013 (incorporating Amendment 1) must be based on that version.

(8) Tests carried out based on AS/NZS 2918—2001 and issued prior to AS/NZS 2918—2018 being referenced in the NCC remain valid. Reports relating to tests carried out after the NCC reference date for AS/NZS 2918 must relate to the revised Standard.

(9) For AS 2699 Parts 1 and 3:

(a) For AS 2699.1, the 2000 edition has been retained for a transitional period ending on 30 April 2025.

(b) For AS 2699.3, the 2002 edition has been retained for a transitional period ending on 30 April 2025.

(10) For AS 1397, the 2011 edition has been retained for a transitional period ending on 31 August 2023.

(11) For AS/NZS 3500.3, the 2018 edition has been retained for a transitional period ending on 31 August 2023.

NSW Table 1

NT Table 1

QLD Table 1

SA Table 1

TAS Table 1

VIC Table 1

WA Table 1

Schedule 3 Commonwealth of Australia

Schedule 4 Australian Capital Territory

Schedule 5 New South Wales

3	**Site preparation**	
	Part 3.1	Scope and application of Section 3
	NSW 3.1.2	Application
4	**Footings and slabs**	
	Part 4.2	Footings, slabs and associated elements
	NSW 4.2.3	Excavation for footings
	NSW 4.2.8	Damp-proofing membrane
9	**Fire safety**	
	Part 9.5	Smoke alarms and evacuation lighting
	NSW 9.5.1	Smoke and heat alarm requirements
NSW Part 9.4	**Fire protection of garage top dwellings**	
	NSW 9.4.1	Fire separation
	NSW 9.4.2	Construction of floors
	NSW 9.4.3	Construction of walls
13	**Energy efficiency**	
	Part 13.2	Building fabric
	NSW 13.2.1	Application of Part 13.2
	NSW 13.2.3	Roofs and ceilings
	NSW 13.2.4	Roof lights
	NSW 13.2.5	External walls
	NSW 13.2.6	Floors and subfloor walls
	NSW 13.2.7	Attached Class 10a buildings
	NSW Part 13.3	External glazing
	Part 13.4	Building sealing
	NSW 13.4.1	Application of Part 13.4
	NSW Part 13.5	Ceiling fans
	NSW Part 13.6	Whole-of-home energy usage
	Part 13.7	Services
	NSW 13.7.1	Application of Part 13.7
	NSW 13.7.5	Electric resistance space heating
	NSW 13.7.6	Artificial lighting
	NSW 13.7.7	Water heater in a heated water supply system
	NSW 13.7.8	Swimming pool heating and pumping
	NSW 13.7.9	Spa pool heating and pumping
NSW Part 13.1	**Scope and application of Section 13**	
	NSW 13.1.1	Scope
	NSW 13.1.2	Application
Schedule 1	**Definitions**	
Schedule 2	**Referenced documents**	

3 Site preparation

Part 3.1 Scope and application of Section 3

Delete 3.1.2 and insert NSW 3.1.2 as follows:

NSW 3.1.2 Application

[2019: NSW Part 3.1.1]

(1) The application of this Section is subject to the following:

(a) The Governing Requirements of NCC 2022 Volume Two.

(b) Any conditions set out within the following *Deemed-to-Satisfy Provisions* of NCC Volume Two:

(i) H1D3(1), for earthworks.

(ii) H2D4(1)(b), for drainage.

(c) The State and Territory variations, additions and deletions contained in the Schedules to the ABCB Housing Provisions and NCC Volume Two.

(2) Except for Table 3.2.1 as referenced by Figure 3.3.2 and except for H1D3(1) for determination of a normal site as referenced by H1D4, Part 3.2 does not apply in New South Wales.

Notes

In New South Wales requirements for shoring and adequacy of excavation works are a prescribed condition of *development consent*. In addition, consent authorities can place specific controls on siteworks associated with the construction of a building, by imposing further conditions on the *development consent*.

Explanatory Information

In NCC 2019, the content of Section 3 of the ABCB Housing Provisions (other than content added in NCC 2022 or later) was contained in the acceptable construction practices for Parts 3.1.1, 3.1.3 and 3.1.4 of NCC 2019 Volume Two.

NCC 2019 Volume Two did not include an acceptable construction practice for Part 3.1.2.

4 Footings and slabs

Part 4.2 Footings, slabs and associated elements

Delete 4.2.3 and insert NSW 4.2.3 as follows:

NSW 4.2.3 Excavation for footings

[2019: 3.2.2.1, NSW 3.3.3.1(e)]

(1) Excavation for footings, including thickenings for slabs and pads must be clean cut with vertical sides, wherever possible.

(2) The base of the excavation must be—

(a) for flat *sites*, generally level but may slope not more than 1:40 to allow excavations to drain; and

(b) for sloping *sites* at an angle of not more than 1:10; and

(c) for stepped footings in accordance with 4.2.7.

(3) Footing excavations must be free of loose earth, tree roots, mud or debris.

(4) Topsoil containing grass roots must be removed from the *site* of the *foundation*.

(5) On loose sand *sites* or *sites* subject to wind or water erosion, the depth below *finished ground level* to the bottom of footings must be not less than 300 mm.

(6) The height of a finished slab-on-ground must be in accordance with 3.3.3(b).

Notes

In New South Wales requirements for shoring and adequacy of excavation works are a prescribed condition of *development consent*. In addition consent authorities can place specific controls on siteworks associated with the construction of a building, by imposing further conditions of *development consent*.

Delete 4.2.8 and insert NSW 4.2.8 as follows:

NSW 4.2.8 Damp-proofing membrane

[2019: NSW 3.2.2.6]

(1) A damp-proofing membrane must be installed under slab-on-ground construction for a Class 1 building and for a Class 10 building where the slab is continuous with the slab of a Class 1 building in accordance with (2), (3), (4) and (5).

(2) Materials: A damp-proofing membrane must be—

(a) 0.2 mm nominal thickness polyethylene film; and

(b) high impact resistant,

determined in accordance with criteria specified in clause 5.3.3.3 of AS 2870.

(3) A damp-proofing membrane must be branded continuously “AS 2870 Concrete underlay, 0.2 mm High impact resistance”.

(4) Installation: A damp-proofing membrane must be installed as follows—

(a) Lap not less than 200 mm at all joints.

(b) Tape or seal with a close-fitting sleeve around all service penetrations.

(c) Fully seal where punctured (unless for service penetrations) with additional polyethylene film and tape.

(5) The damp-proofing membrane must be placed beneath the slab so that the bottom surface of the slab is entirely underlaid and must extend under internal and edge beams to finish at ground level in accordance with Figure 4.2.8.

Notes

A range of polyethylene films can be used, including black film and orange film, provided they satisfy the requirements for high impact resistance in accordance with the criteria specified in clause 5.3.3.3 of AS 2870.

9 Fire safety

Part 9.5 Smoke alarms and evacuation lighting

Delete 9.5.1 and insert NSW 9.5.1 as follows:

NSW 9.5.1 Smoke and heat alarm requirements

[2019: NSW 3.7.5.2 and NSW 1.1.4]

(1) Smoke alarms must—

(a) be located in—

(i) Class 1a buildings excluding any non-associated Class 10a *private garages*, subject to (2), in accordance with 9.5.2 and 9.5.4; and

(ii) Class 1b buildings in accordance with 9.5.3 and 9.5.4; and

(b) comply with AS 3786, except that in a Class 10a *private garage* where the use of the area is likely to result in smoke alarms causing spurious signals, any other alarm deemed suitable in accordance with AS 1670.1 may be installed provided that smoke alarms complying AS 3786 are installed elsewhere in the Class 1 building; and

(c) be powered from the consumer mains source where a consumer mains source is supplied to the building; and

(d) be interconnected where there is more than one alarm.

(2) Heat alarms must—

(a) be installed in a Class 10a *private garage* that is located beneath a *garage top dwelling* and not associated with that dwelling; and

(b) be located on or near the ceiling; and

(c) comply with AS 1603.3; and

(d) be powered from the consumer mains source supplying the *garage top dwelling* where a consumer mains source is supplied to the building; and

(e) be interconnected to the *garage top dwelling* smoke alarms *required* by 9.5.2.

(3) Where heat alarms *required* by (2) are installed, durable notices must be permanently fixed to the *garage top dwelling* and non-associated Class 10a *private garage* in prominent locations, indicating that—

(a) a heat alarm is installed in the non-associated Class 10a *private garage*; and

(b) the heat alarm is interconnected to the *garage top dwelling* smoke alarms.

Explanatory Information

A smoke alarm can give spurious alarms if the atmosphere contains particles which obscure vision, such as could occur in a Class 10a *private garage* part of a building. NSW 9.5.1(1)(b) therefore allows the use of a more suitable alarm, such as a heat alarm, in these locations.

NSW 9.5.1(1)(d) requires alarms to be interconnected where there is more than one alarm. This only applies within a single dwelling. Therefore alarms in a Class 1a dwelling need not be interconnected with alarms in another dwelling.

Where a Class 10a *private garage* is located beneath a *garage top dwelling* and is not associated with that dwelling, NSW 9.5.1(2)(a) requires a heat alarm to be provided in the non-associated Class 10a *private garage*. NSW 9.5.1(2)(b) to (e) contains requirements for installing heat alarms. NSW 9.5.1(3) contains requirements for the provision of durable notices.

NSW Part 9.4 Fire protection of garage top dwellings

NSW 9.4.1 Fire separation

[2019: NSW 1.1.1]

(1) A *garage top dwelling* must be separated from a non-associated *private garage* by a floor complying with NSW 9.4.2.

(2) Where a *garage top dwelling* is served by an internal stair, the *garage top dwelling* must be separated from a non-associated *private garage* by a wall complying with NSW 9.4.3.

(3) Where a *garage top dwelling* is located above both associated and non-associated *private garages*—

(a) in addition to a floor *required* by (1), the *private garages* must be separated with a wall complying with NSW 9.4.3; or

(b) where a *garage top dwelling* is not served by an internal stair, the *garage top dwelling* may be separated from the *private garages* by a floor complying with NSW 9.4.2.

NSW 9.4.2 Construction of floors

[2019: NSW 1.1.2]

(1) A floor *required* by NSW 9.4.1(1) or NSW 9.4.1(3)(b) must—

(a) have an FRL of not less than 30/30/30 when tested from the underside; or

(b) have a *fire-protective covering* on the underside of the floor, including beams incorporated in it; or

(c) be a floor/ceiling system incorporating a ceiling which has a *resistance to the incipient spread of fire* to the space above itself of not less than 60 minutes.

(2) Where a floor subject to (1)(a) depends on direct vertical or lateral support from another part to maintain its FRL, that supporting part must have an FRL of not less than 30/-/-.

(3) Where a service passes through a floor referred to in (1), the penetration must not reduce the performance of the floor or covering.

NSW 9.4.3 Construction of walls

[2019: NSW 1.1.3]

(1) A wall *required* by NSW 9.4.1(2) or NSW 9.4.1(3)(a) must—

(a) have an FRL of not less than 30/30/30 when tested from the non-associated *private garage* side; or

(b) be of masonry construction not less than 90 mm thick.

(2) A wall subject to (1) must—

(a) commence at the footings or ground slab; and

(b) extend to the underside of a floor complying with NSW 9.4.2.

(3) A wall referred to in (1)(a), if of *lightweight construction* must be tested in accordance with Specification 6 of Volume One.

(4) Where a service passes through a wall referred to in (1), the penetration must not reduce the performance of the wall.

(5) A wall *required* by NSW 9.4.1(2) or NSW 9.4.1(3)(a) need not comply with 9.3.1.

13 Energy efficiency

Part 13.2 Building fabric

Delete 13.2.1 and insert NSW 13.2.1 as follows:

NSW 13.2.1 Application of Part 13.2

[2019: NSW 3.12.1]

(1) The provisions of 13.2.2, NSW 13.2.3, NSW 13.2.5 and NSW 13.2.6 apply to a Class 1 or 10 building where a *development consent* specifies that the insulation is to be provided as part of the development.

(2) NSW 13.2.3 and NSW 13.2.5 apply to all Class 1 buildings and Class 10a buildings with a *conditioned space*.

Delete 13.2.3 and insert NSW 13.2.3 as follows:

NSW 13.2.3 Roofs and ceilings

[2019: NSW 3.12.1.1]

(1) A roof that—

(a) has metal sheet roofing directly fixed to metal purlins, metal rafters or metal battens; and

(b) does not have a ceiling lining or has a ceiling lining fixed directly to those metal purlins, metal rafters or metal battens,

must have a thermal break, consisting of a material with an *R-Value* of greater than or equal to 0.2, installed between the metal sheet roofing and its supporting metal purlins, metal rafters or metal battens.

(2) (1) does not apply to roofs constructed using insulated sandwich panels.

Delete 13.2.4 and insert NSW 13.2.4 as follows:

NSW 13.2.4 Roof lights

This clause has deliberately been left blank.

13.2.4 does not apply in NSW.

Delete 13.2.5 and insert NSW 13.2.5 as follows:

NSW 13.2.5 External walls

[2019: NSW 3.12.1.1]

(1) A metal-framed wall that forms part of the building *envelope* must have a thermal break, consisting of a material with an *R-Value* of not less than R0.2, installed at all points of contact between the external cladding and the metal frame if the wall—

(a) does not have a wall lining or has a wall lining that is fixed directly to the metal frame; and

(b) is clad with weatherboards, fibre-cement or the like, or metal sheeting fixed to the metal frame.

(2) The requirements of (1) do not apply to walls constructed using insulated sandwich panels.

Explanatory Information

- A lightweight wall has no high thermal mass cladding on the outside or lining on the inside. Typically, this would represent a framed wall, clad externally with timber weatherboards, fibre-cement sheet, metal or autoclaved aerated concrete.
- Because of the high thermal conductance of metal, a thermal break is needed when a metal framing member directly connects the external cladding to the internal lining or the internal environment. For the purposes of NSW 13.2.5(1)(b), expanded polystyrene strips greater than or equal to 12 mm thickness and timber greater than or

equal to 20 mm thickness are deemed to achieve an *R-Value* greater than or equal to 0.2.

- Continuous insulation placed outside the *primary insulation layer*, including *reflective insulation*, may also be subject to *vapour permeance* requirements of 10.8.1(2). Many continuous insulation products and foils have a low vapour permeance. Some *reflective insulation* products have perforations to increase their *vapour permeance*. Many perforated *reflective insulation* products are not classified as a water barrier by AS 4200.1. Accordingly, these products are not suitable for use as a *water control layer*.
- Many *reflective insulation* products that use perforations to increase their *vapour permeance* are not suitable for use behind vertical or diagonally orientated timber cladding boards, where *required* by clause 7.5.2 of the ABCB Housing Provisions, or behind open jointed or unsealed cladding systems.

Delete 13.2.6 and insert NSW 13.2.6 as follows:

NSW 13.2.6 Floors and subfloor walls

[2019: NSW 3.12.1.1]

(1) A concrete slab-on-ground with an in-slab or in-screed heating or cooling system, must have insulation with an *R-Value* greater than or equal to 1.0, installed around the vertical edge of its perimeter.

(2) Insulation required by (1) must—

(a) be *water resistant*; and

(b) be continuous from the adjacent finished ground level—

(i) to a depth of greater than or equal to 300 mm; or

(ii) for at least the full depth of the vertical edge of the concrete slab-on-ground (see Figure 13.2.6).

(3) The requirements of (1) do not apply to an in-screed heating or cooling system used solely in a bathroom, amenity area or the like.

Explanatory Information

- NSW 13.2.6(3) provides an exemption for an in-screed heating or cooling system used solely in bathrooms, amenity areas and the like, as these are typically small areas.
- Care should be taken to ensure that the type of termite management system selected is compatible with the slab edge insulation.

Insert Figure 13.2.6 as follows:

Figure 13.2.6: Insulation of slab edge

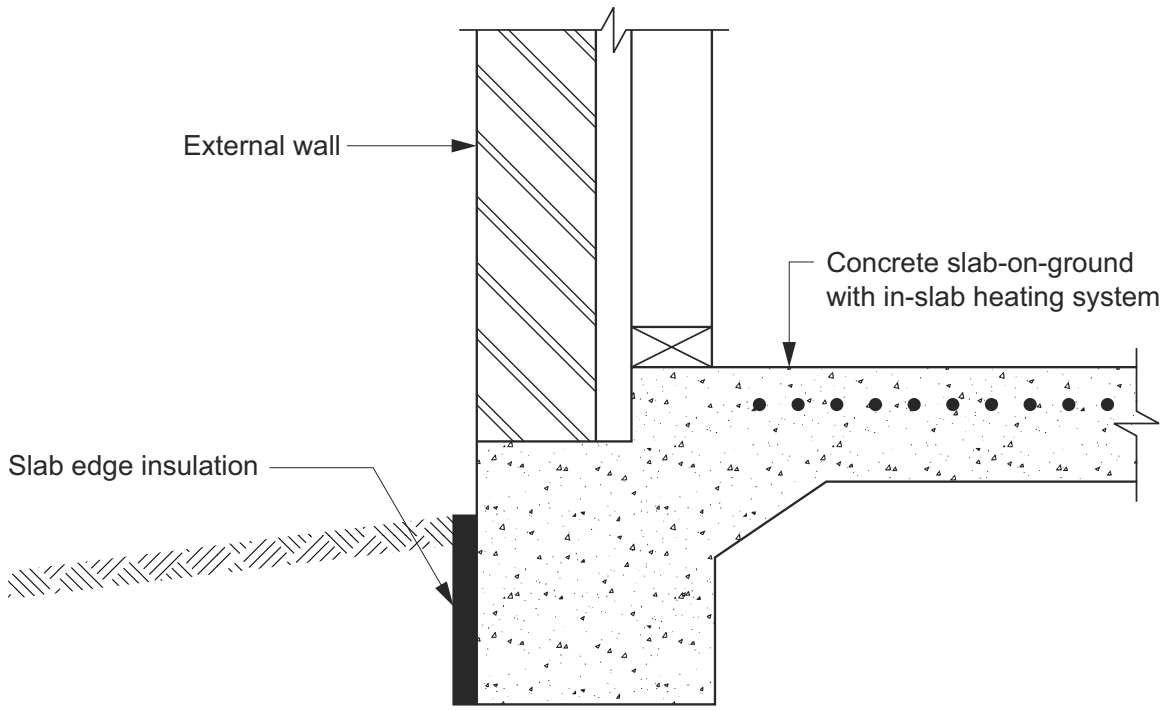

Delete 13.2.7 and insert NSW 13.2.7 as follows:

NSW 13.2.7 Attached Class 10a buildings

This clause has deliberately been left blank.

13.2.7 does not apply in NSW.

NSW Part 13.3 External glazing

This Part has been deliberately left blank. Part 13.3 does not apply in NSW.

Part 13.4 Building sealing

Delete 13.4.1 and insert NSW 13.4.1 as follows:

NSW 13.4.1 Application of Part 13.4

[2019: NSW 3.12.3]

(1) This Part applies to—

(a) a Class 1 building; and

(b) a Class 10a building with a *conditioned space*.

(2) The provisions of (1) do not apply to the following:

(a) Existing buildings being relocated.

(b) Parts of buildings that cannot be fully enclosed.

(c) A building in *climate zones* 2 and 5 where the only means of air-conditioning is by using an evaporative cooler.

(d) A permanent building *ventilation opening* that is necessary for the safe operation of a gas appliance.

Explanatory Information

- The term “cannot be fully enclosed” means parts of buildings with permanent openings such as balconies, shade rooms, rooms with fixed louvres, mesh or other material that allows air flow. Adjustable louvres are considered to provide full enclosure to the opening they accommodate. Such rooms are unlikely to be conditioned given the high air flow rates; therefore application of the *Performance Requirement* to these parts of buildings would not result in reduction in energy use.
- Appropriate ventilation for gas appliances can be obtained from relevant legislation, referenced standards and product installation manuals.

NSW Part 13.5 Ceiling fans

This Part has been deliberately left blank. Part 13.5 does not apply in NSW.

NSW Part 13.6 Whole-of-home energy usage

This Part has been deliberately left blank. Part 13.6 does not apply in NSW.

Part 13.7 Services

Delete 13.7.1 and insert NSW 13.7.1 as follows:

NSW 13.7.1 Application of Part 13.7

[2019: NSW 3.12.5]

(1) This Part applies to—

(a) a Class 1 building; and

(b) a Class 10a building.

(2) The provisions of (1) do not apply to existing services associated with existing buildings being relocated.

Delete 13.7.5 and insert NSW 13.7.5 as follows:

NSW 13.7.5 Electric resistance space heating

This clause has deliberately been left blank.

13.7.5 does not apply in NSW.

Delete 13.7.6 and insert NSW 13.7.6 as follows:

NSW 13.7.6 Artificial lighting

This clause has deliberately been left blank.

13.7.6 does not apply in NSW.

Delete 13.7.7 and insert NSW 13.7.7 as follows:

NSW 13.7.7 Water heater in a heated water supply system

This clause has deliberately been left blank.

13.7.7 does not apply in NSW.

Delete 13.7.8 and insert NSW 13.7.8 as follows:

NSW 13.7.8 Swimming pool heating and pumping

This clause has deliberately been left blank.

13.7.8 does not apply in NSW.

Delete 13.7.9 and insert NSW 13.7.9 as follows:

NSW 13.7.9 Spa pool heating and pumping

This clause has deliberately been left blank.

13.7.9 does not apply in NSW.

NSW Part 13.1 Scope and application of Section 13

NSW 13.1.1 Scope

[New for 2022]

This Section sets out the following *Deemed-to-Satisfy Provisions* for energy efficiency:

(a) Building fabric (see Part 13.2).

(b) Building sealing (see Part 13.4).

(c) Services (see Part 13.7).

Explanatory Information

Compliance is not *required* with Part 13.3, Part 13.5 and Part 13.6 as those matters are regulated under BASIX.

NSW 13.1.2 Application

[New for 2022]

The application of this Section is subject to the following:

(a) The Governing Requirements of NCC Volume Two.

(b) The State and Territory variations, additions and deletions contained in the Schedules to the ABCB Housing Provisions and NCC Volume Two.

Explanatory Information

In NCC 2019, the content of Section 13 of the ABCB Housing Provisions (other than content added in NCC 2022 or later) was contained in the acceptable construction practices for Part 3.12 of NCC 2019 Volume Two.

Schedule 1 Definitions

Aisle: A walkway at the end of *rows* of seating, not being *continental seating*, leading to a cross-over or to an egress doorway.

Appropriate authority

The relevant authority with the responsibility to determine the particular matter.

Assembly building

A building where people may assemble for—

(a) civic, theatrical, social, political or religious purposes including a library, theatre, public hall or place of worship; or

(b) educational purposes in a *school*, *early childhood centre*, preschool, or the like; or

(c) entertainment, recreational or sporting purposes including—

(i) a cinema; or

(ii) a sports stadium, sporting or other club; or

(d) transit purposes including a bus station, railway station, airport or ferry terminal.

Auditorium: A part of an *entertainment venue* used or intended to be used for the purposes of accommodating an audience to an entertainment.

Continental seating: *Rows* of seating in which the *rows* extend the full width of an *auditorium* without intervening *aisles*.

Cross-over: In relation to an *entertainment venue* or *temporary structure*, means a walkway between *aisles* or between an *aisle* and an egress doorway.

Designated bushfire prone area

Land that:

(a) has been designated under legislation; or

(b) has been identified under an environmental planning instrument, development control plan or in the course of processing and determining a development application,

as land that can support a bushfire or is likely to be subject to bushfire attack.

Development consent: Is as defined in the Environmental Planning and Assessment Act 1979.

Entertainment venue: Is as defined in the Environmental Planning and Assessment Regulation 2021.

Film: A cinematograph film of a size of 35 mm or greater.

Flying scenery: Scenery of a kind that is lifted above the *stage* floor by means of lines run from a *grid*.

Garage top dwelling: A Class 1a dwelling located above a Class 10a *private garage* which is not associated with that Class 1a dwelling and includes any internal entry stair serving the garage top dwelling.

Grid: A framework from which lines are run for the purpose of lifting *flying scenery* above the *stage* floor.

Information and education facility: Is as defined in the Standard Instrument—Principal Local Environment Plan.

Licensed premises: Is as defined in the Liquor Act 2007.

Minimum lateral clearance: A permanently unobstructed space having a height above floor level of not less than 2000 mm and a width of not less than the specified measurement.

Planning for Bush Fire Protection: Is as prescribed by the Environmental Planning and Assessment Regulation 2021.

Projection suite: Such part of an *entertainment venue* as is designed to accommodate apparatus used for projecting *films*.

Row: A row of seating—

(a) between a wall or other barrier and an *aisle*; or

(b) between 2 *aisles*.

Small live music or arts venue: The whole or part of a building—

(a) in which cultural activities including live music, visual arts' displays, dancing, poetry and spoken word performances are provided to the public; and

(b) that has a *floor area* of not more than 300 square metres; and

(c) that has a *rise in storeys* of not more than 2; and

(d) that occupies not more than 2 *storeys* including the ground floor *storey*; and

(e) where pyrotechnics or theatrical smoke (smoke machines, hazers or the like) are not used.

Spa pool: Is as defined in the Swimming Pools Act 1992.

Special fire protection purpose: (As per Section 100B(6) of the Rural Fires Act 1997) means any of the following purposes:

(a) a school,

(b) a child care centre,

(c) a hospital (including a hospital for the mentally ill or mentally disordered),

(d) a hotel, motel or other tourist accommodation,

(e) a building wholly or principally used as a home or other establishment for mentally incapacitated persons,

(f) seniors housing within the meaning of State Environmental Planning Policy (Housing for Seniors or People with a Disability) 2004 (now SEPP (Housing) 2021),

(g) a group home within the meaning of State Environmental Planning Policy No 9 - Group Homes (now SEPP (Housing) 2021),

(h) a retirement village,

(i) any other purpose prescribed by the regulations (Rural Fires Regulation 2022).

Notes

For application of this definition in the BCA, the term "school" does not include a college, university or similar tertiary educational establishment.

Temporary structure: Either—

(a) a booth, tent or other temporary enclosure, whether or not a part of the booth, tent or enclosure is permanent; or

(b) a mobile structure.

Schedule 2 Referenced documents

Insert NSW Table 1 as follows:

NSW Table 1: Schedule of referenced documents

No.	Date	Title	Volume One	Volume Two	Housing Provisions
AS/NZS 1596	2014	The Storage and Handling of LP Gas	NSW I4D61	N/A	N/A
AS 1603	2018	Automatic fire detection and alarm systems — Heat alarms (See Note 1)	N/A	N/A	NSW 9.5.1
AS 2001 Part 5.4	2005	Methods of test for textiles: Dimensional washing and drying procedures for textile texting	NSW S7C7	N/A	N/A
AS/NZS 3000	2018	Electrical installations (known as the Australian/New Zealand Wiring Rules)	NSW I5D14	N/A	N/A
AS/NZS 3002	2008	Electrical installations — Shows and carnivals	NSW I5D14	N/A	N/A
SSL	N/A	Appraisal Specification FAS102	NSW I4D46	N/A	N/A
NSW Legislation	1979	Environmental Planning and Assessment Act	NSW G5D3, NSW Schedule 1	NSW H7D4, NSW Schedule 1	NSW Schedule 1
NSW Legislation	2021	Environmental Planning and Assessment Regulation	NSW I4D1, NSW I4D46, NSW Schedule 1	NSW Schedule 1	NSW Schedule 1
NSW Legislation	2007	Liquor Act	NSW Schedule 1	NSW Schedule 1	NSW Schedule 1
NSW Legislation	1997	Rural Fires Act	NSW G5D3, NSW G5D4, NSW Schedule 1	NSW Schedule 1, NSW H7D4	NSW Schedule 1
NSW Legislation	N/A	Standard Instrument— Principal Local Environmental Plan	NSW Schedule 1	NSW Schedule 1	NSW Schedule 1
NSW Legislation	1992	Swimming Pools Act	NSW G1P2, NSW G1D2, NSW Schedule 1	NSW H7P1, NSW H7D2, NSW Schedule 1	NSW Schedule 1

No.	Date	Title	Volume One	Volume Two	Housing Provisions
NSW Legislation	2018	Swimming Pools Regulation	NSW G1P2, NSW G1D2	NSW H7P1, NSW H7D2	N/A
NSW Legislation	2011	Work Health and Safety Act	NSW G1D5	N/A	N/A

Table Notes

(1) Heat alarms complying with AS 1603.3 must be a class type A1 or A2.

Schedule 6 Northern Territory

3	**Site preparation**	
	Part 3.4	Termite risk management
	3.4.1	Requirements for termite management systems
	NT 3.4.2	Termite management systems
10	**Health and amenity**	
NT Part 10.7	**Sound insulation**	
	NT 10.7.1	Sound insulation requirements
	NT 10.7.2	General installation requirements for walls
	NT 10.7.3	Soil and waste pipes
13	**Energy efficiency**	
	NT Part 13.6	Whole-of-home energy usage
NT Part 13.1	**Scope and application of Section 13**	
	NT 13.1.1	Scope
	NT 13.1.2	Application
NT Part 13.2	**Building fabric**	
	NT 13.2.1	Application of Part 13.2
	NT 13.2.2	Building fabric thermal insulation
	NT 13.2.3	Roofs
	NT 13.2.4	Roof lights
	NT 13.2.5	External walls
	NT 13.2.6	Attached Class 10a buildings
NT Part 13.3	**External glazing**	
	NT 13.3.1	Application of Part 13.3
	NT 13.3.2	External glazing
	NT 13.3.3	Shading
NT Part 13.4	**Building sealing**	
	NT 13.4.1	Application of Part 13.4
	NT 13.4.2	Chimneys and flues
	NT 13.4.3	Roof lights
	NT 13.4.4	External windows and doors
	NT 13.4.5	Exhaust fans
	NT 13.4.6	Construction of ceilings, walls and floors
	NT 13.4.7	Evaporative coolers
NT Part 13.5	**Air movement**	
	NT 13.5.1	Application of Part 13.5
	NT 13.5.2	Air movement
	NT 13.5.3	Ventilation openings
NT Part 13.7	**Services**	
	NT 13.7.1	Application of Part 13.7
	NT 13.7.2	Insulation of services
	NT 13.7.3	Central heating water piping

NT 13.7.4	Heating and cooling ductwork
NT 13.7.5	Water heater in a heated water supply system

Schedule 2 Referenced documents

3 Site preparation

Part 3.4 Termite risk management

3.4.1 Requirements for termite management systems

[2019: 3.1.4.2]

Delete 3.4.1(2) and insert NT 3.4.1(2) as follows:

(2) For the purposes of (1), a *primary building element* consisting entirely of, or a combination of, any of the following materials is considered not subject to termite attack:

(a) Steel, aluminium or other metals.

(b) Concrete.

(c) Masonry.

(d) Fibre-reinforced cement.

(e) Timber — naturally termite resistant in accordance with Appendix C of AS 3660.1 in areas where Mastotermes darwiniensis are not prevalent.

(f) Timber — preservative treated in accordance with Appendix D of AS 3660.1.

Delete 3.4.2 and insert NT 3.4.2 as follows:

NT 3.4.2 Termite management systems

[2019: NT 3.1.4.3(d) and (e)]

Where a termite management system is required it must—

(a) be selected appropriate to Table 3.4.2; and

(b) comply with—

(i) AS 3660.1; or

(ii) have been tested and passed the tests *required* by Section 5 of AS 3660.3; and

(c) have a durable notice installed in accordance with 3.4.3; and

(d) include additional termite risk management measures in areas where Mastotermes darwiniensis are prevalent; and

(e) where a chemical termite management system is used—

(i) the chemical must be included on the *appropriate authority's* pesticides register; and

(ii) when used as an external perimeter termite management system for Mastotermes darwiniensis, it is—

(A) installed by excavating trenches, treating the exposed trench and backfilling the trench with treated material; and

(B) covered by a concrete strip not less than 50 mm thick and 300 mm wide measured from the external wall of the building.

Explanatory Information

3.4.2(b)(i) provides the option of having a chemical termite management system tested to AS 3660.3. In order for the test results to remain valid, the system would then have to be installed as tested.

10 Health and amenity

NT Part 10.7 Sound insulation

NT 10.7.1 Sound insulation requirements

[2019: NT 3.8.6.2]

(1) A separating wall between two or more Class 1 buildings must—

(a) achieve the weighted sound reduction index (R_W) and impact sound resistance required by Table NT 10.7.1; and

(b) be installed in accordance with the appropriate requirements of NT 10.7.2 and NT 10.7.3.

(2) For the purposes of this Part, the R_W may be determined in accordance with AS/NZS ISO 717.1.

Explanatory Information

The wall configurations shown in Figures NT 10.7.1b, 10.7.1c, 10.7.1d, 10.7.1e, 10.7.1f, 10.7.1g, 10.7.1h, 10.7.1i, 10.7.1j, 10.7.1k, 10.7.1l, 10.7.1m, 10.7.1n, 10.7.1o, 10.7.1p, 10.7.1q, 10.7.1r, 10.7.1s and 10.7.1t are typical examples. Other proprietary methods are available for meeting the R_W and sound impact levels required by NT 10.7.1.

Insert Table 10.7.1 as follows:

Table 10.7.1: Required R_W and sound impact levels for separating walls

Separating wall — location and penetrations	Impact sound resistance (as per Figures NT 10.7.1b to 10.7.1h)	R_W (as per Figures NT 10.7.1i to 10.7.1u)
Type A: between a bathroom, *sanitary compartment*, laundry or kitchen and a *habitable room* (other than a kitchen) in an adjoining Class 1 building (dwelling) (see Figure NT 10.7.1a)	Yes	50
Type B: in all other cases to those listed as Type A (see Figure NT 10.7.1a)	No	45
A soil and waste pipe or other penetration that serves or passes through a *separating wall* between houses — if the adjacent room is a *habitable room* (other than a kitchen)	No	45
A soil and waste pipe or other penetration that serves or passes through a *separating wall* — if the room is a kitchen or any other room	No	30

Insert NT Figure 10.7.1a as follows:

NT Figure 10.7.1a: Required R_W — plan view

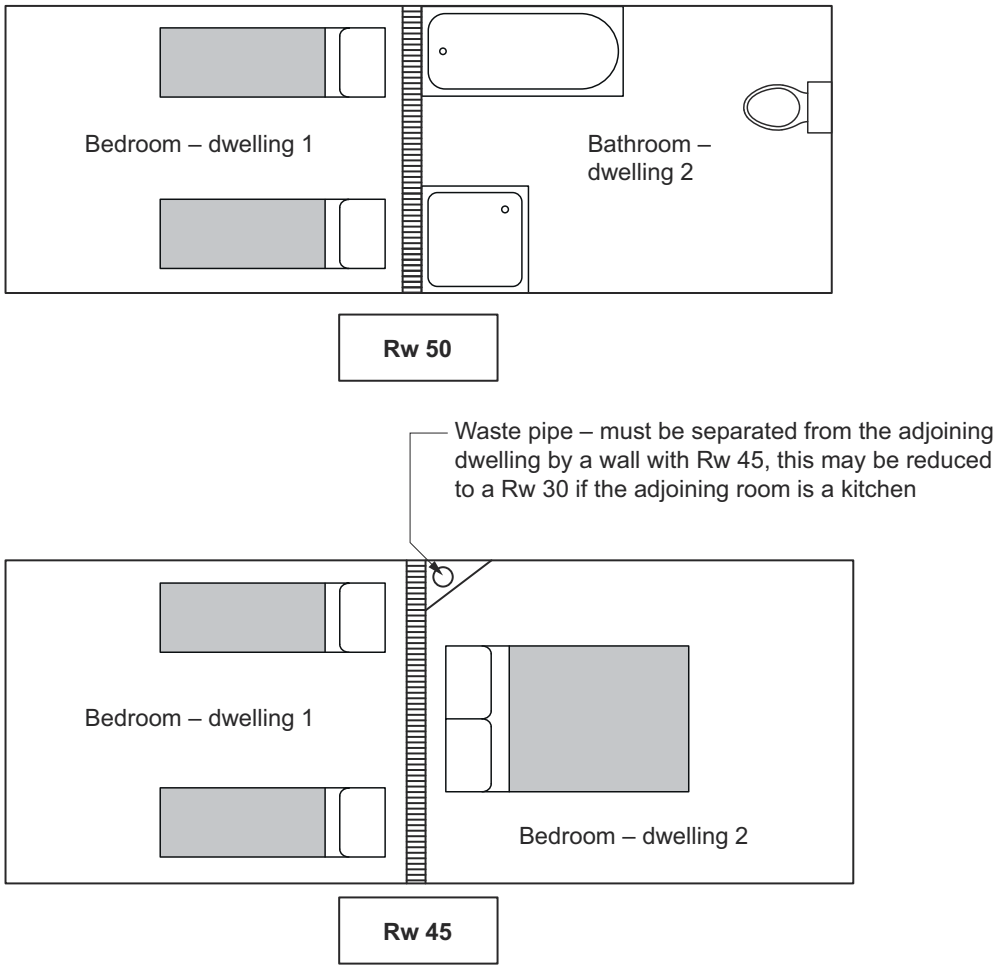

Insert NT Figure 10.7.1b as follows:

NT Figure 10.7.1b: Construction of walls to reduce impact sound and achieve a 50 R_W: cavity brickwork

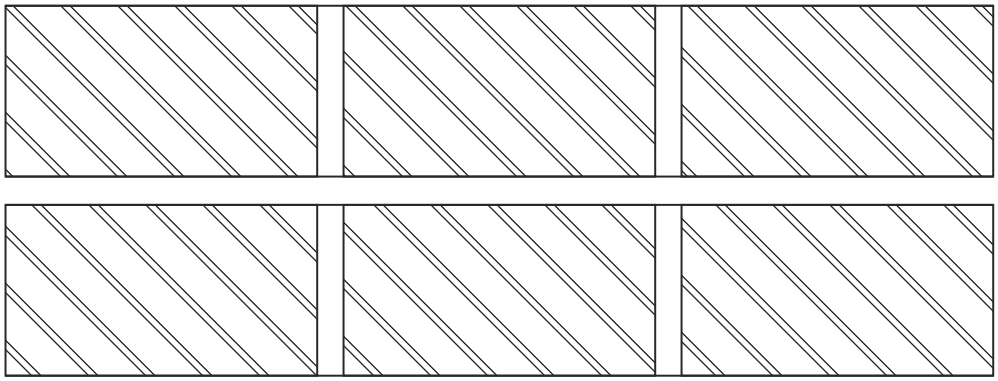

Figure Notes

2 leaves of 90 mm brick masonry with—

(a) all joints filled solid with mortar; and

(b) an air space not less than 40 mm between the leaves; and

(c) the leaves connected by ties in accordance with AS 3700, except '(for piers—isolated and engaged)' is removed from Clause 8.5.1(d) and where Clause 8.5.1 requires design for unreinforced masonry in accordance with Section 7, the member must also be designed as unreinforced masonry in accordance with Tables 10.3 and 4.1(a)(i)(C) of AS 3700; and

(d) wall tie spacing as set out in Part 5.6.

Insert NT Figure 10.7.1c as follows:

NT Figure 10.7.1c: Construction of walls to reduce impact sound and achieve a 50 R_W: single leaf brickwork

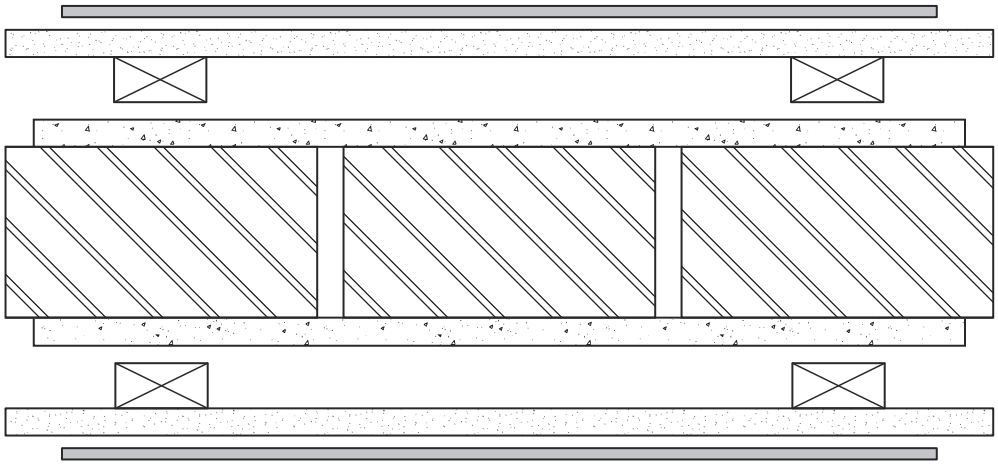

Figure Notes

80 mm thick brick masonry with—

(a) each face rendered 13 mm thick; and

(b) 50 mm x 12 mm thick timber battens at not more than 610 mm centres fixed to each face but not recessed into the render; and

(c) one layer of 12 mm thick softboard nailed to the battens; and

(d) 6 mm thick medium density hardboard adhesive-fixed into the softboard.

Insert NT Figure 10.7.1d as follows:

NT Figure 10.7.1d: Construction of walls to reduce impact sound and achieve a 50 R_W: concrete blockwork

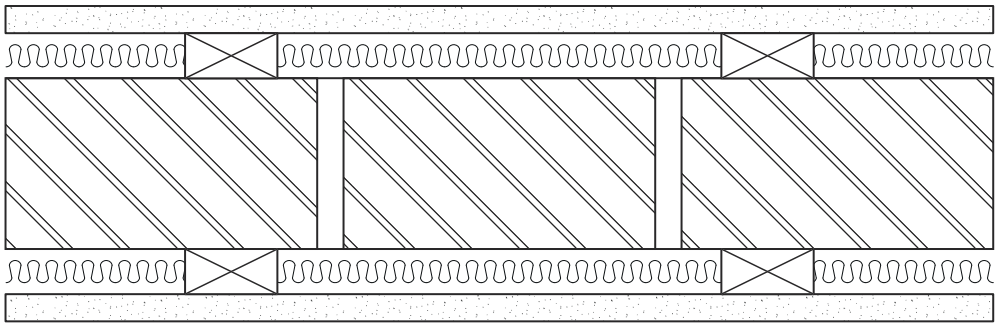

Figure Notes

190 mm thick concrete block masonry with—

(a) each face of the blocks fitted with 50 mm x 50 mm timber battens, spaced at not more than 610 mm centres, screw-fixed into resilient plugs with rubber inserts; and

(b) the space between the battens completely filled with mineral or glass wool blanket or batts not less than 50 mm thick; and

(c) the outer face of the battens finished with plasterboard not less than 10 mm thick.

Insert NT Figure 10.7.1e as follows:

NT Figure 10.7.1e: Construction of walls to reduce impact sound and achieve a 50 R_W: timber-framed walling (method 1)

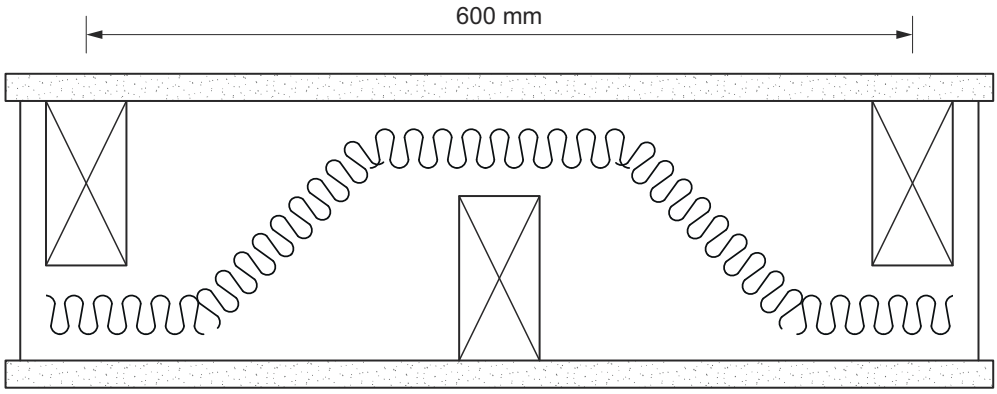

Figure Notes

70 mm x 45 mm F5 staggered timber studs at 600 mm centres both side on 120 mm x 35 mm F5 timber plates with—

(a) one layer of 16 mm fire-protective grade plasterboard on both faces; and

(b) 50 mm glass fibre batts.

Insert NT Figure 10.7.1f as follows:

NT Figure 10.7.1f: Construction of walls to reduce impact sound and achieve a 50 R_W: timber-framed walling (method 2)

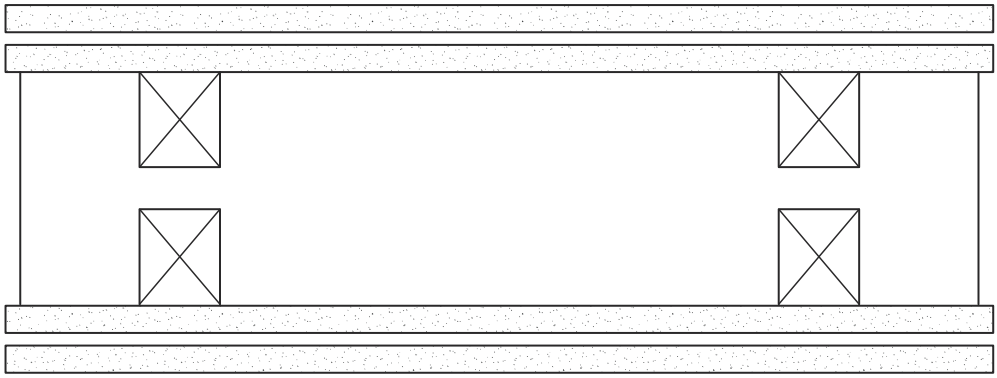

Figure Notes

70 mm x 45 mm F5 timber double studs at 450 mm - 600 mm centres with an air space not less than 20 mm between studs with two layers of 13 mm fire-protective grade plasterboard on both faces.

Insert NT Figure 10.7.1g as follows:

NT Figure 10.7.1g: Construction of walls to reduce impact sound and achieve a 50 R_W: steel stud walling (method 1)

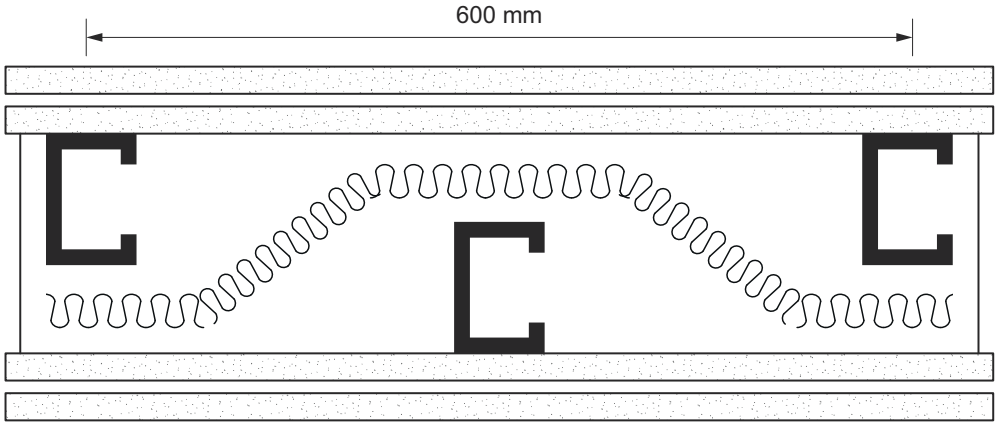

Figure Notes

64 mm staggered metal studs (0.75 mm base metal thickness) at 600 mm centres both sides, clipped in 92 mm metal tracks with—

(a) two layers of 13 mm fire-protective grade plasterboard to each side; and

(b) 50 mm glass wool cavity batts.

Insert NT Figure 10.7.1h as follows:

NT Figure 10.7.1h: Construction of walls to reduce impact sound and achieve a 50 R_W: steel stud walling (method 2)

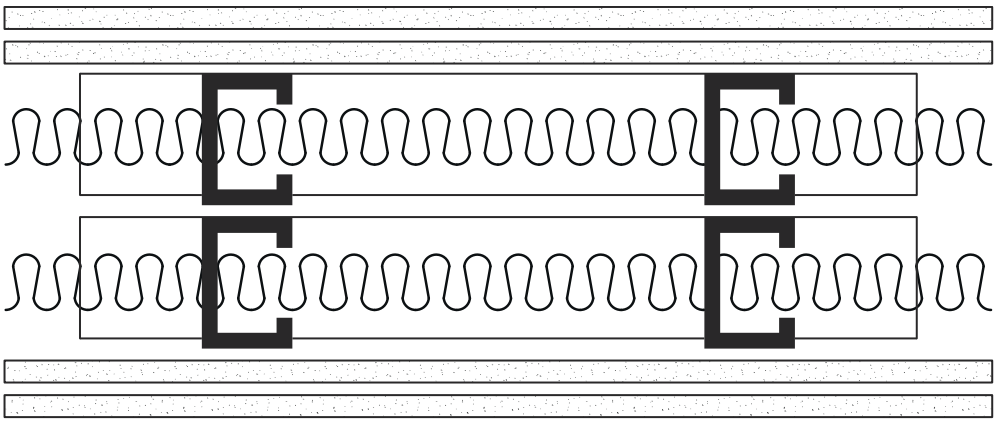

Figure Notes

64 mm double metal studs (0.75 mm base meta thickness) at 600 mm centres with an air space not less than 20 mm between studs, in separate frames with no mechanical links, with—

(a) two layers of 13 mm fire-protective grade plasterboard to each side; and

(b) 50 mm glass wool cavity batts.

Insert NT Figure 10.7.1i as follows:

NT Figure 10.7.1i: Clay brickwork to achieve R_W of 45 (method 1)

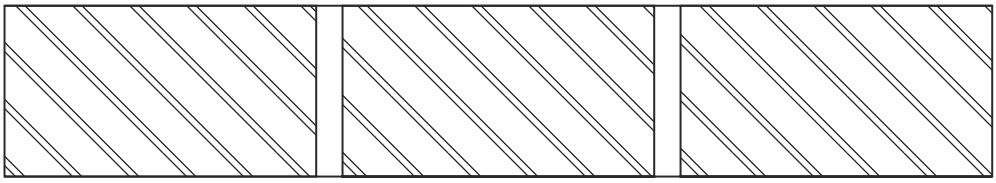

Figure Notes

Clay brickwork 110 mm thick in one or more leaves and with a mass per unit area of not less than 290 kg/m^2.

Insert NT Figure 10.7.1j as follows:

NT Figure 10.7.1j: Clay brickwork to achieve R_W of 45 (method 2)

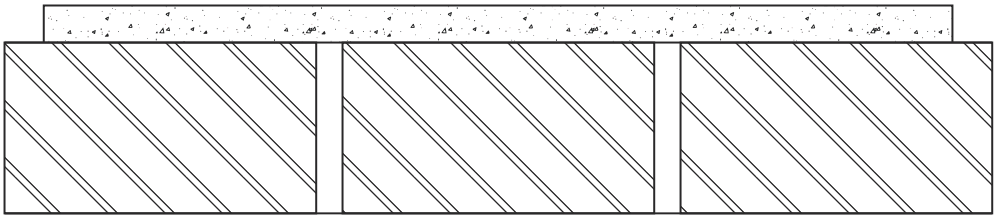

Figure Notes

Clay brickwork 80 mm thick, pressed brick and rendered 13 mm on one side, the mass per unit area of the unrendered wall being not less than 215 kg/m^2.

Insert NT Figure 10.7.1k as follows:

NT Figure 10.7.1k: Calcium silicate brickwork to achieve R_W of 45 (method 1)

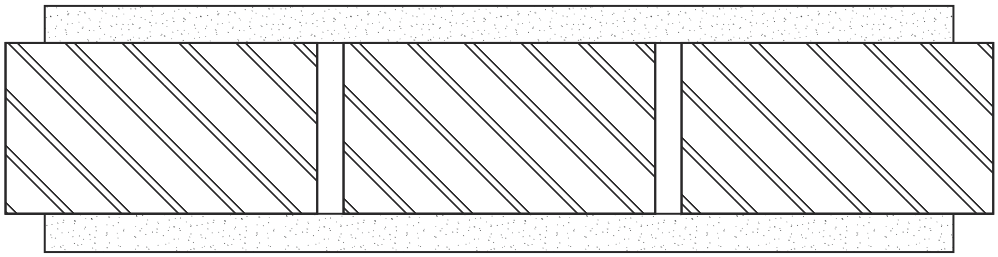

Figure Notes

Calcium silicate brickwork 90 mm thick with one layer of 10 mm fire-protective grade plasterboard on each side.

Insert NT Figure 10.7.1l as follows:

NT Figure 10.7.1l: Calcium silicate brickwork to achieve R_W of 45 (method 2)

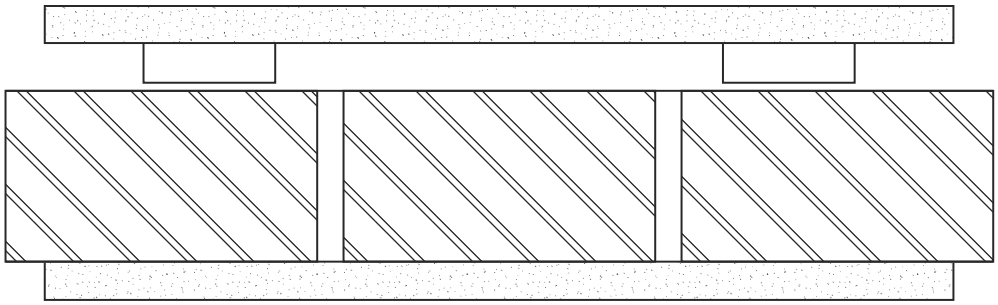

Figure Notes

Calcium silicate brickwork 90 mm thick with one layer of 10 mm fire-protective grade plasterboard on metal furring channels.

Insert NT Figure 10.7.1m as follows:

NT Figure 10.7.1m: Concrete blockwork to achieve R_W of 45 (method 1)

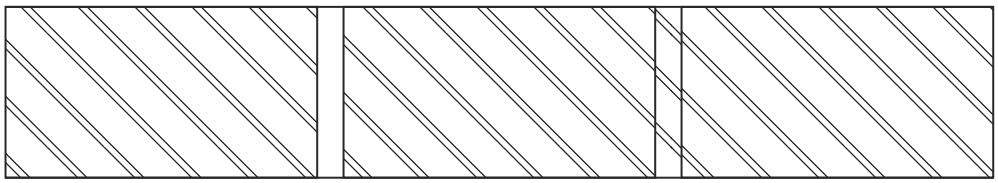

Figure Notes

Concrete blockwork with—

(a) 190 mm solid units (or thicker); and

(b) material density 2200 kg/m^3.

Insert NT Figure 10.7.1n as follows:

NT Figure 10.7.1n: Concrete blockwork to achieve R_W of 45 (method 2)

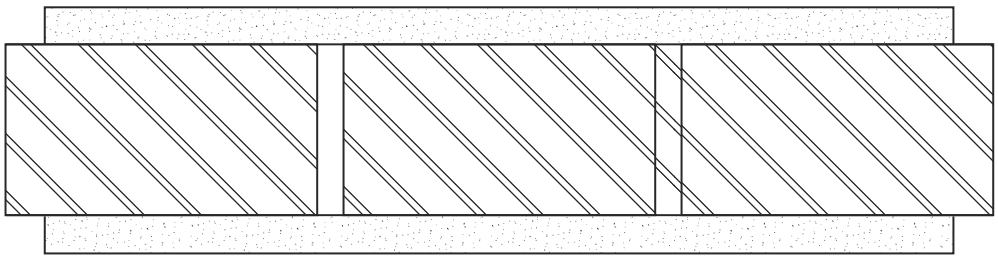

Figure Notes

Concrete blockwork with—

(a) 110 mm solid units (or thicker); and

(b) material density 2200 kg/m^3; and

(c) material thickness — 83 mm minimum; and

(d) 10 mm plasterboard or 12 mm render on each face.

Insert NT Figure 10.7.1o as follows:

NT Figure 10.7.1o: Concrete wall to achieve R_W of 45

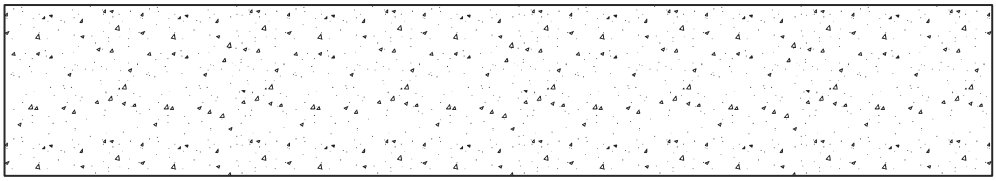

Figure Notes

In-situ concrete — 125 mm thick with a density not less than 2200 kg/m^3.

Insert NT Figure 10.7.1p as follows:

NT Figure 10.7.1p: Steel stud walling to achieve R_W of 45

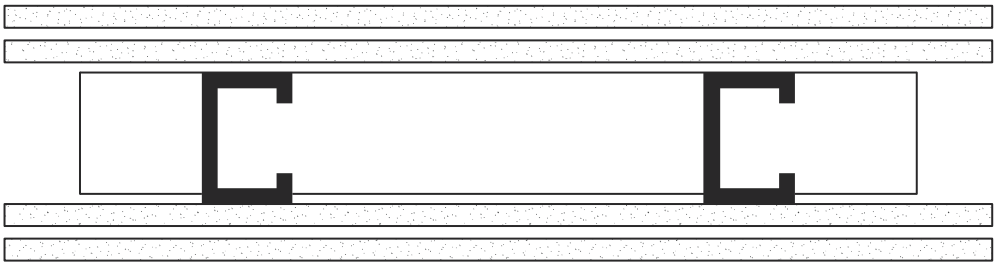

Figure Notes

Steel stud walling with—

(a) 2 layers of 16 mm thick fire-protective grade plasterboard fixed to each face; or

(b) 2 layers of 13 mm thick plasterboard on both sides of 75 mm studs.

Insert NT Figure 10.7.1q as follows:

NT Figure 10.7.1q: Timber stud walling to achieve R_W of 49

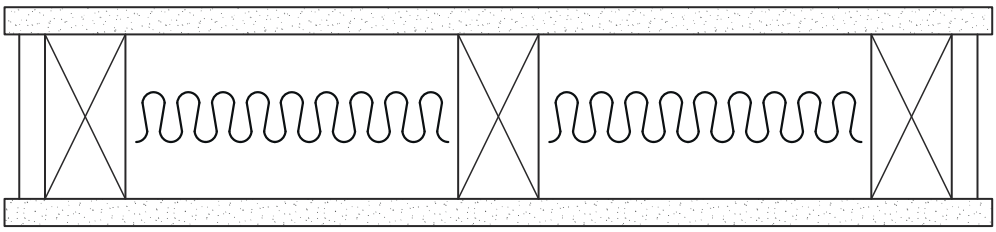

Figure Notes

70 mmx 45 mm timber studs at 450 mm - 600 mm centres with—

(a) one layer of 16 mm fire-protective grade plasterboard on one face; and

(b) 50 mm glass fibre batts; and

(c) one layer of 16 mm fire-protective grade plasterboard on metal resilient channel.

Insert NT Figure 10.7.1r as follows:

NT Figure 10.7.1r: Timber stud walling to achieve R_W of 46

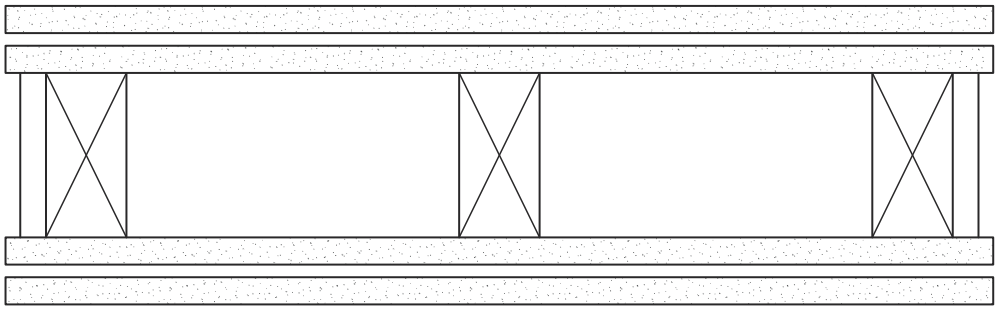

Figure Notes

Timber stud walling with 70 mm x 45 mm timber studs at 450 mm - 600 mm centres with two layers of 16 mm fire-protective grade plasterboard on both sides.

Insert NT Figure 10.7.1s as follows:

NT Figure 10.7.1s: Ducts or other construction separating soil and waste pipes from units — masonry to achieve R_W of 30

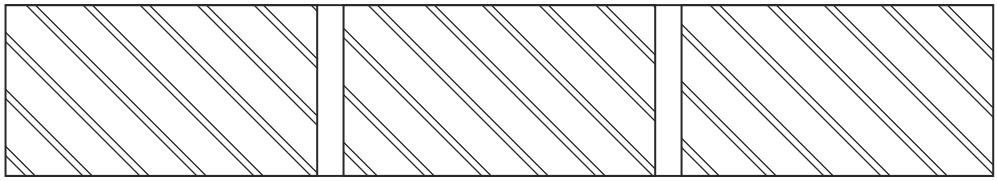

Figure Notes

Masonry not less than 90 mm thick.

Insert NT Figure 10.7.1t as follows:

NT Figure 10.7.1t: Ducts or other construction separating soil and waste pipes from units — plasterboard to achieve R_W of 30 (method 1)

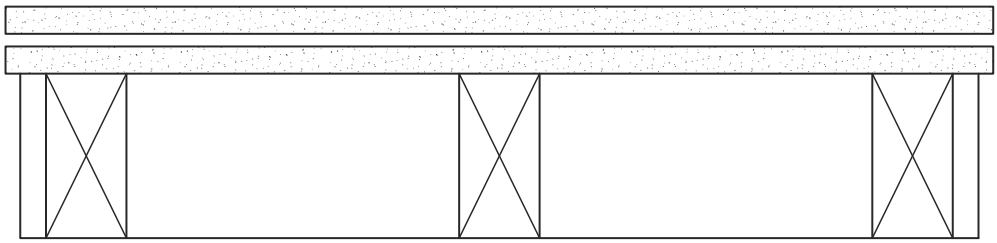

Figure Notes

2 layers of plasterboard each 10 mm thick, fixed to timber studs not less than 75 mm x 50 mm and spaced at not more than 400 mm centres.

Insert NT Figure 10.7.1u as follows:

NT Figure 10.7.1u: Ducts or other construction separating soil and waste pipes from units — plasterboard to achieve R_W of 30 (method 2)

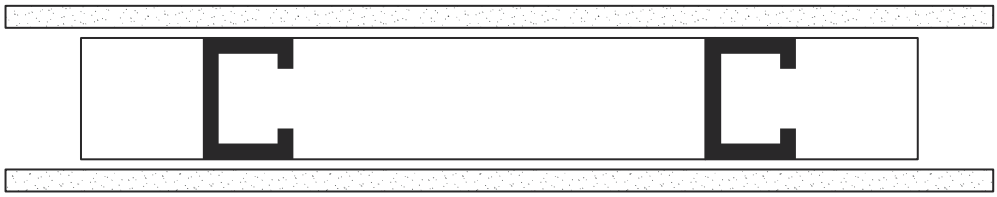

Figure Notes

2 layers of plasterboard each 13 mm thick, one on each side of steel studs not less than 50 mm deep and spaced at not more than 400 mm centres.

NT 10.7.2 General installation requirements for walls

[2019: NT 3.8.6.3]

(1) To achieve an appropriate R_W and impact sound resistance, walls must—

(a) be installed in accordance with the appropriate requirements contained in (2) to (6); and

(b) at the junction of sound insulated walls with perimeter walls and roof cladding, be sealed in accordance with any details in Figure NT 10.7.2a.

(2) Masonry units must—

(a) be laid with all joints filled solid, including those between the masonry and any adjoining construction; and

(b) not be chased for services.

(3) Joints between concrete slabs and any adjoining construction must be filed solid.

(4) Plasterboard must be installed as follows:

(a) If one layer is *required* under this Part, joints must be staggered with the joints in sheets on the opposite face of the wall.

(b) If 2 layers are *required*, the first layer must be fixed according to (a) and the second layer must be fixed to the first layer with nails, screws or adhesive so that the joints do not coincide with those of the first layer (see Figure NT 10.7.2b).

(c) Joints between sheets or between sheets and any adjoining construction must be taped and filled solid.

(d) Fire-protective grade plasterboard (where nominated) must be the grade manufactured for use in fire-resisting construction.

(5) Steel studs and perimeter members must be installed as follows:

(a) The section of steel must be not less than 0.6 mm thick.

(b) Studs must be not less than 63 mm in depth unless another depth is specified in NT 10.7.1.

(c) Studs must be fixed to steel top and bottom plates of sufficient depth to permit secure fixing of the plasterboard.

(d) All steel members at the perimeter of the wall must be securely fixed to the adjoining structure and be bedded in resilient compound or the joints must be caulked so that there are no voids between the steel members and the wall.

(6) Timber studs and permitter members must be installed as follows:

(a) Studs must be fixed to top and bottom plates of sufficient depth to permit secure fixing of the plasterboard.

(b) Noggings and like members must not bridge between studs supporting different wall leaves.

(c) All timber members at the perimeter of the wall must be securely fixed to the adjoining structure and bedded in resilient compound or the joints must be caulked so that there are no voids between the timber members and the wall.

Insert NT Figure 10.7.2a as follows:

NT Figure 10.7.2a: Sound insulation between units — double stud wall configuration

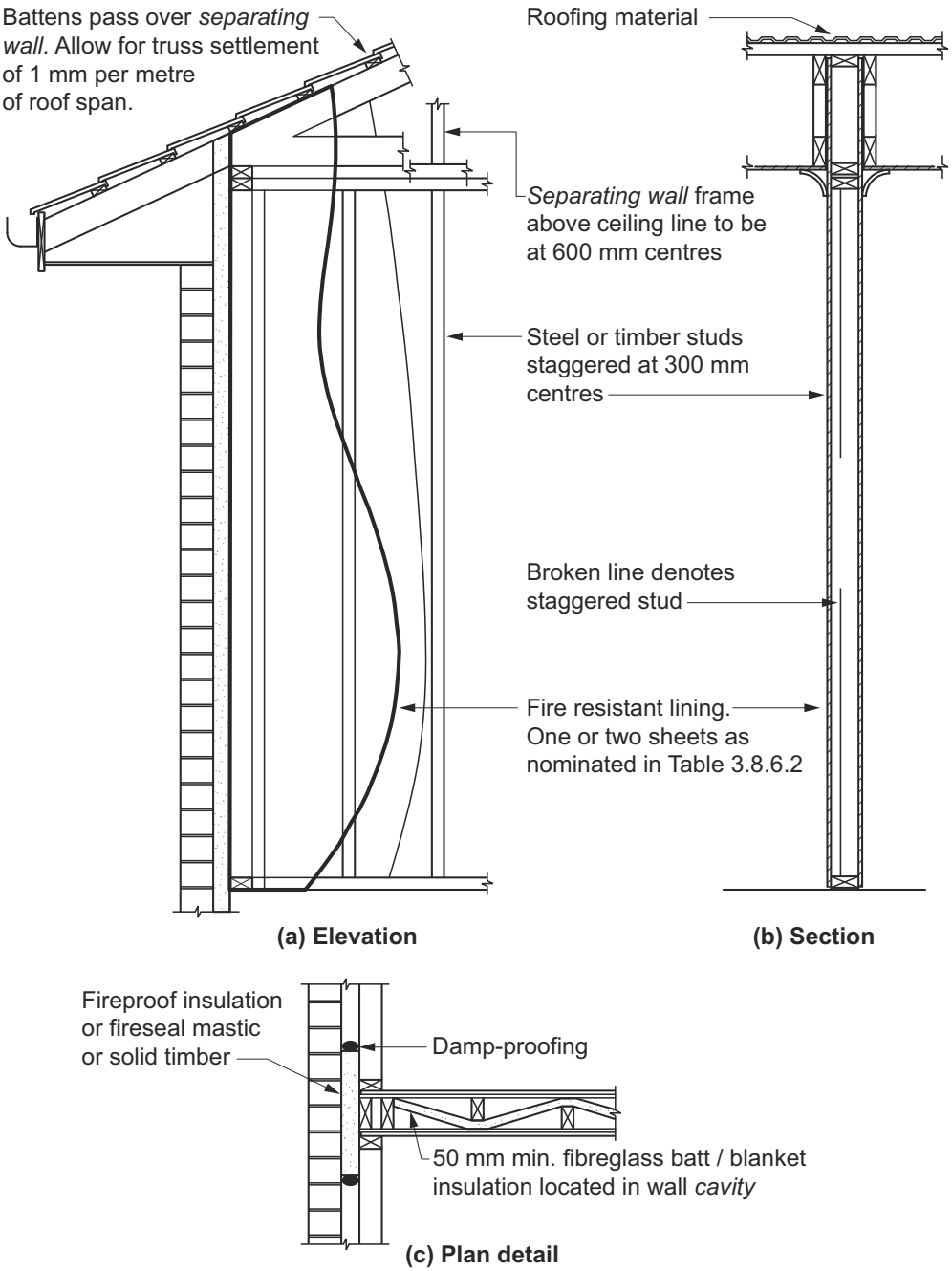

Insert NT Figure 10.7.2b as follows:

NT Figure 10.7.2b: Typical installation of plaster sheets for sound insulation

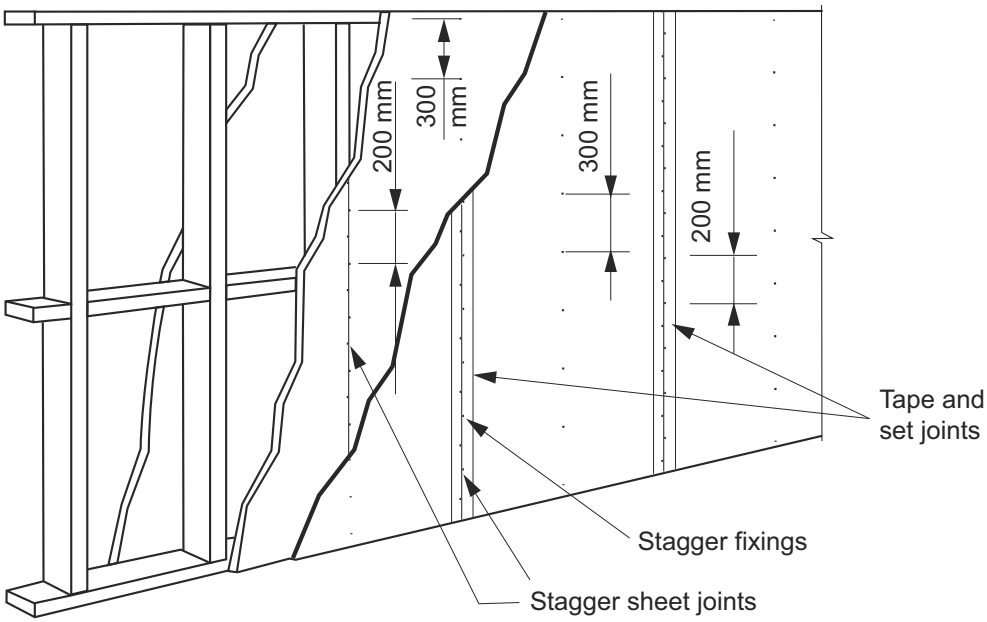

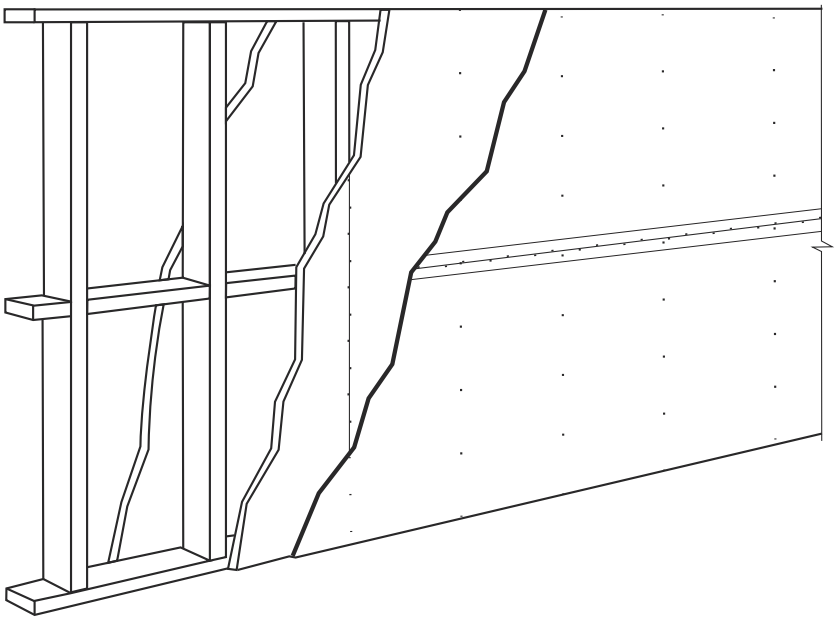

NT 10.7.3 Soil and waste pipes

[2019: NT 3.8.6.4]

If a soil or waste pipe passes through a separating wall—

(a) a door or panel providing access to the pipe must not open into any *habitable room*, other than a kitchen; and

(b) an access door or panel in any other part must be firmly fixed so as to overlap the frame or rebate of the frame by not less than 10 mm, be fitted with a sealing gasket along all edges and constructed of—

(i) wood, plasterboard or blockboard not less than 38 mm thick; or

(ii) compressed fibre reinforced cement sheeting not less than 9 mm thick; or

(iii) other suitable material with a mass per unit area not less than 24.4. kg/m^2.

13 Energy efficiency

NT Part 13.6 Whole-of-home energy usage

This Part is deleted from the BCA in Northern Territory.

NT Part 13.1 Scope and application of Section 13

NT 13.1.1 Scope

[New for 2022]

This Section sets out the following *Deemed-to-Satisfy Provisions* for energy efficiency:

(a) Building fabric (see NT Part 13.2).

(b) External glazing (see NT Part 13.3).

(c) Building sealing (see NT Part 13.4).

(d) Air movement (see NT Part 13.5).

(e) Services (see NT Part 13.7).

NT 13.1.2 Application

[New for 2022]

The application of this Section is subject to the following:

(a) The Governing Requirements of NCC Volume Two.

(b) The Northern Territory variations, additions and deletions contained in the Schedule 6 to NCC Volume Two.

NT Part 13.2 Building fabric

NT 13.2.1 Application of Part 13.2

[New for 2022]

(1) The provisions of NT 13.2.2 to NT 13.2.6 apply to—

(a) a Class 1 building; and

(b) a Class 10a building with a *conditioned space*.

(2) The provisions of NT 13.2.6 apply to a Class 1 building with an attached Class 10a building.

(3) NT Part 13.2 must be applied as directed in NT H6D2(1)(a) or (b).

NT 13.2.2 Building fabric thermal insulation

[New for 2022]

(1) Where *required*, insulation must comply with AS/NZS 4859.1 and be installed so that it—

(a) abuts or overlaps adjoining insulation other than at supporting members such as studs, noggings, joists and the like where the insulation must butt against the member; and

(b) forms a continuous barrier with ceilings, walls, bulkheads, floors or the like that inherently contribute to the thermal barrier; and

(c) does not affect the safe or effective operation of a *domestic service* or fitting.

(2) Where *required*, *reflective insulation* must be installed with—

(a) the necessary airspace, to achieve the *required R-Value* between a reflective side of the *reflective insulation* and a building lining or cladding; and

(b) the *reflective insulation* closely fitted against any penetration, door or *window* opening; and

(c) the *reflective insulation* adequately supported by framing members; and

(d) each adjoining sheet of roll membrane being—

(i) overlapped not less than 150 mm; or

(ii) taped together.

(3) Where *required*, bulk insulation must be installed so that—

(a) it maintains its position and thickness, other than where it crosses roof battens, water pipes, electrical cabling or the like; and

(b) in a ceiling, where there is no bulk insulation or *reflective insulation* in the *external wall* beneath, it overlaps the *external wall* by not less than 50 mm.

NT 13.2.3 Roofs

[New for 2022]

(1) A roof must achieve the *Total R-Value* of 2.7 for the downwards direction of heat flow in *climate zone* 1 and downwards and upwards in *climate zone* 3.

(2) The *Total R-Value* is reduced to 2.2 for each of the following:

(a) The roof upper surface has a solar absorptance value of not more than 0.55.

(b) The roof space is ventilated by—

(i) gable vents, ridge vents, eave vents, roof vents or the like that—

(A) are evenly distributed to allow an unobstructed flow of air; and

(B) are located to ensure, where practicable, there are no dead airspaces; and

(C) have an aggregate fixed open area of not less than 1.0% of the ceiling area; or

(ii) not less than 2 wind-driven roof ventilators having an aggregate opening area of not less than 0.14 m^2 in conjunction with gable vents, ridge vents, eave vents, roof vents or the like having an aggregate fixed open area of not less than 0.2% of the ceiling area; or

(iii) a tiled roof without *sarking-type material* at roof level.

(3) A roof that—

(a) is *required* to achieve a minimum *Total R-Value*; and

(b) has metal sheet roofing fixed to metal purlins, metal rafters or metal battens; and

(c) does not have a ceiling lining or has a ceiling lining fixed directly to those metal purlins, metal rafters or metal battens,

must have a thermal break, consisting of a material with an *R-Value* of not less than 0.2, installed between the metal sheet roofing and its supporting member.

(4) A roof, or roof and associated ceiling, is deemed to have the *Total R-Value required* by Tables NT 13.2.3a, NT 13.2.3b and NT 13.2.3c.

(5) Where, for operational or safety reasons, ceiling insulation cannot be installed at or around exhaust fans or recessed downlights, a reduction of insulation of 1% or more of the ceiling area must be compensated for by proportionately increasing the *R-Value* of insulation in the remainder of the ceiling in accordance with Table NT 13.2.3d.

Insert NT Table 13.2.3a as follows:

NT Table 13.2.3a: Typical insulation options for typical roof and ceiling construction: Unventilated roof spaces

		Climate zone 1	*Climate zone* 3
Tiled roof (clay or concrete)	*Total R-Value* of roof and ceiling materials	0.43	0.37
	Minimum value of added *R-Value* of insulation	2.27	2.33
Metal roof	*Total R-Value* of roof and ceiling materials	0.41	0.35
	Minimum value of added *R-Value* of insulation	2.29	2.35
Minimum *required Total R-Value*		2.70	2.70

Insert NT Table 13.2.3b as follows:

NT Table 13.2.3b: Typical insulation options for typical roof and ceiling construction: Pitched roof with flat ceiling – ventilated roof space

		Climate zone 1	*Climate zone* 3
Tiled roof (clay or concrete)	*Total R-Value* of roof and ceiling materials	0.73	0.22
	Minimum value of added *R-Value* of insulation	1.97	2.48
Metal roof	*Total R-Value* of roof and ceiling materials	0.71	0.20
	Minimum value of added *R-Value* of insulation	1.99	2.50
Minimum *required Total R-Value*		2.70	2.70

Insert NT Table 13.2.3c as follows:

NT Table 13.2.3c: Typical insulation options for typical roof and ceiling construction: Pitched roof with flat ceiling – unventilated roof space

		Climate zone 1	*Climate zone* 3
Tiled roof (clay or concrete)	*Total R-Value* of roof and ceiling materials	0.55	0.40
	Minimum value of added *R-Value* of insulation	2.15	2.30
Metal roof	*Total R-Value* of roof and ceiling materials	0.53	0.38
	Minimum value of added *R-Value* of insulation	2.17	2.32
Minimum *required Total R-Value*		2.70	2.70

Insert NT Table 13.2.3d as follows:

NT Table 13.2.3d: Adjusted minimum R-Value of ceiling insulation required to compensate for loss of ceiling insulation area

Percentage of ceiling area uninsulated	Minimum *R-Value* of ceiling insulation *required* to satisfy 13.2.3(1)									
	1.0	1.5	2.0	2.5	3.0	3.5	4.0	4.5	5.0	5.5
0.5% to less than 1.0%	1.0	1.6	2.2	2.8	3.4	4.0	4.7	5.4	6.2	6.9
1.0% to less than 1.5%	1.1	1.7	2.3	2.9	3.6	4.4	5.2	6.1	7.0	X
1.5% to less than 2.0%	1.1	1.7	2.4	3.1	3.9	4.8	5.8	6.8	X	X
2.0% to less than 2.5%	1.1	1.8	2.5	3.3	4.2	5.3	6.5	X	X	X
2.5% to less than 3.0%	1.2	1.9	2.6	3.6	4.6	5.9	X	X	X	X
3.0% to less than 4.0%	1.2	2.0	3.0	4.2	5.7	X	X	X	X	X
4.0% to less than 5.0%	1.3	2.2	3.4	5.0	X	X	X	X	X	X

Explanatory Information: 13.2.3(2)

- The roof space ventilation option applies to a pitched roof with a flat ceiling to ensure that efficient cross ventilation is achieved in the roof space to remove hot air. Roof space ventilation is generally not suitable for most flat, skillion, cathedral ceiling and similar roof types because of the lack of space between the ceiling and roof.
- Care should be taken to ensure that the roof *ventilation openings* do not allow rain penetration and that they comply with appropriate bushfire provisions.
- Gaps between roof tiles with sarking (or *reflective insulation* at rafter level) and metal sheet roofing are not acceptable methods of providing roof space ventilation.
- Compliance with the ventilation provisions may result in the ingress of wind driven rain or fine dust, or stimulate the growth of mould or fungus in the roof enclosure. Consideration should therefore be given to the surrounding environmental features prior to adopting this as an alternative to the roof insulation provisions.
- A light coloured roof reduces the flow of heat from solar radiation better than a dark colour roof. A roof with a solar absorptance value of less than 0.55 means the roof is of a light colour such as white, off-white, cream or dull zinc aluminium.

Explanatory Information: Tables NT 13.2.3a, NT 13.2.3b and NT 13.2.3c

- Typical construction: The tables above provide examples of various roofs and ceiling, walls and floors. The *Total R-Value required* is achieved by adding the *Total R-Value* of the basic element, i.e. roof and ceiling, walls or floors, and the *R-Value* of any additional insulation incorporated in that element The *Total R-Value* of the basic roof and ceiling has been determined by adding together the *R-Values* of the outdoor air film, roof cladding, roof airspace, ceiling sheet lining and internal film.
- The *Total R-Value* of the roof and ceiling materials may need to be adjusted if other building elements such as sarking are also installed. For example, sarking or sheet insulation under tiles may change a roof space from "ventilated" to "unventilated".
- Thermal bridging: Irrespective of the framing material used, the minimum added *R-Value* specified is deemed to include the effect of thermal bridging created by framing members in situations other than described in the following point.
- Thermal break: Because of the high thermal conductance of metal, a thermal break is to be provided where the ceiling lining of a house is fixed directly to the underside of the metal purlins or metal battens of a metal deck roof or where there is no ceiling lining. The purpose of the thermal break is to ensure that the thermal performance of this form of roof construction is comparable to that of a similar roof with timber purlins or timber battens. A thermal break may be provided by materials such as timber, expanded polystyrene strips, plywood or compressed bulk insulation. The material used as a thermal break must separate the metal purlins or metal battens from the metal deck roofing and achieve the specified *R-Value*. *Reflective insulation* alone is not suitable for use as a thermal break because it requires an adjoining airspace to achieve the specified *R-Value* (see last point).
- Location of insulation: The thermal performance of the roof may vary depending on the position of the insulation, the climatic conditions, the design of the house and the way in which it is operated. For example, insulation installed under the roof, rather than on the ceiling, of a conditioned house with a large roof space is less effective because of the additional volume of roof air space that would need to be heated or cooled. Conversely, for an unconditioned house, the use of *reflective insulation* is more effective when placed directly under the roof.
- Choice of insulation: There are a number of different insulation products that may be used to achieve the minimum added *R-Value*. However, care should be taken to ensure that the choice made is appropriate for the construction and climatic conditions as the location and relationship other building elements may not be suitable in all circumstances for both practical and technical reasons. For instance, in some *climate zones*, insulation should be installed with due consideration of *condensation* and associated interaction with adjoining building materials. *Reflective insulation* and its adjoining airspace is considered to achieve the following *R-Values* when used in conjunction with the *Total R-Value* of a pitched roof and flat ceiling construction. To achieve these values, the reflective insulation must be laid directly under the roof cladding and have a minimum airspace of 15 mm between a reflective side of the *reflective insulation* and the adjoining lining or roof cladding. The actual *R-Value* added by reflective insulation and its adjoining airspace should be determined for each product which takes into consideration factors such as the number of adjacent airspaces dimensions of the adjacent airspace, whether the space is ventilated and the presence of an anti-glare coating. When reflective insulation has an anti-glare coating on one side, the emittance value of that side will be greater than the value of the uncoated side. Also, where another emittance value for reflective insulation is used (other than the value used in NT Table 13.2.3d), care should be taken to ensure that the number of airspaces allowed for is consistent with the form of construction and whether the airspace is reflective, partially reflective or non-reflective. Where bulk insulation fills the airspace, the *Total R-Value* should be reduced to take account of the loss of airspace.

Explanatory Information: 13.2.3(5) and Table NT 13.2.3d

When considering the reduction of insulation because of exhaust fans and recessed downlights, 1% of the ceiling area for a 200 m^2 sized house would permit 2 bathroom heater-light assemblies, a laundry exhaust fan, a kitchen exhaust fan and either approximately 25 recessed downlights with 100 mm clearance to the insulation or approximately 10 recessed downlights with 200 mm clearance to the insulation.

NT 13.2.4 Roof lights

[New for 2022]

Roof lights serving a *habitable room* or an interconnecting space such as a corridor, hallway, stairway or the like—

(a) if the total area of the *roof lights* is more than 1.5% but not more than 10% of the *floor area* of the room or space, must comply with Table NT 13.2.4; or

(b) if the total area of the *roof lights* is more than 10% of the *floor area* of the room or space they serve, may only

be used where—

(i) compliance with the natural lighting requirements can only be achieved by a *roof light*; and

(ii) the transparent and translucent elements of the *roof lights*, imperforate ceiling diffuser, achieve— including any

(A) an SHGC of not more than 0.25; and

(B) a Total U-Value of not more than 1.3; and

(c) The aggregate area of *roof lights* serving a building must not exceed 3% of the total area of the floor of the storey served.

Insert NT Table 13.2.4 as follows:

NT Table 13.2.4: Roof lights – thermal performance of transparent and translucent elements

Roof light shaft index	Total area of *roof lights* serving the room or space as a percentage of the *floor area* of the room or space	
	Up to 5% of the *floor area* of the room or space	More than 5% and up to 10%
Less than 0.5	SHGC of not more than 0.5 and a Total U-Value of not more than 5.0	SHGC of not more than 0.25 and a Total U-Value of not more than 2.5
1.0 to 2.5	Total U-Value of not more than 5.0	SHGC of not more than 0.25 and a Total U-Value of not more than 2.5
2.5 and above	Total U-Value of not more than 5.0	SHGC of not more than 0.25 and a Total U-Value of not more than 2.5

Table Notes

(1) The *roof light* shaft index is determined by measuring the distance from the centre of the shaft at the roof to the centre of the shaft at the ceiling level and dividing it by the average internal dimension of the shaft opening at the ceiling level (or the diameter for a circular shaft) in the same units of measurement.

(2) The total area of *roof lights* is the combined area for all *roof lights* serving the room or space.

(3) The area of a *roof light* is the area of the roof opening that allows light to enter the building.

(4) The thermal performance of an imperforate ceiling diffuser may be included in the Total U-Value of the *roof light*.

NT 13.2.5 External walls

[New for 2022]

(1) Each part of an *external wall* must satisfy (2) or (3), except for—

(a) an *external wall* facing the south orientation sector, as described in NT Figure 13.2.5a; and

(b) opaque non-glazed openings such as doors (including garage doors), vents, penetrations, shutters and the like; and

(c) *glazing*; and

(d) a storey of a building complying with (4).

(2) For *climate zone* 1, each part of the *external wall* must satisfy one of the following:

(a) Achieve a minimum *Total R-Value* of 1.9.

(b) Achieve a minimum *Total R-Value* of 1.4 and be constructed on a flooring system that is in direct contact with the ground, such as a concrete slab-on-ground or the like.

(c) For masonry *external wall* with a surface density of not less than 220kg/m^2, shade the *external wall* of the storey with a verandah, balcony, eaves, carport or the like, which—

(i) for an *external wall* facing the north and south orientation factors as described in NT Figure 13.2.5a, projects at a minimum angle of 15 degrees; and

(ii) for an *external wall* facing north east, east, south east, south west, west, north west orientation factors as described in NT Figure 13.2.5a, projects at a minimum angle of 45 degrees, in accordance with NT Figure 13.2.5b.

(d) For a weatherboard, sheet clad or masonry veneer *external wall*—

(i) incorporate reflective insulation with an emittance of not more than 0.05 inwards; and

(ii) be constructed on a flooring system that is in direct contact with ground, such as a concrete slab-on-ground or the like; and

(iii) shade the *external wall* of the storey with a verandah, balcony, eaves, carport of the like which projects at a minimum angle of 15 degrees in accordance with NT Figure 13.2.5b.

(3) For *climate zone* 3, each part of the *external wall* must satisfy one of the following:

(a) Achieve a minimum *Total R-Value* of 1.9.

(b) Achieve a minimum *Total R-Value* of 1.4 and be constructed on a flooring system that is in direct contact with the ground such as a concrete slab-on-ground or the like.

(4) The requirements of (1) do not apply to the storey of a building provided—

(a) the *external walls* achieve a surface density of not less than 220 kg/m^2; and

(b) the external surface of the *external walls* achieves a solar absorptance of not more than 0.45; and

(c) the external glazing achieves a pass when determined with the ABCB 2009 Glazing calculator; and

(d) the *external walls* are shaded with a verandah, balcony, eaves, carport or the like which projects at a minimum angle of 15 degrees in accordance with NT Figure 13.2.5b; and

(e) the *habitable rooms* contain ceiling fans.

Insert NT Figure 13.2.5a as follows:

NT Figure 13.2.5a: Orientation sectors

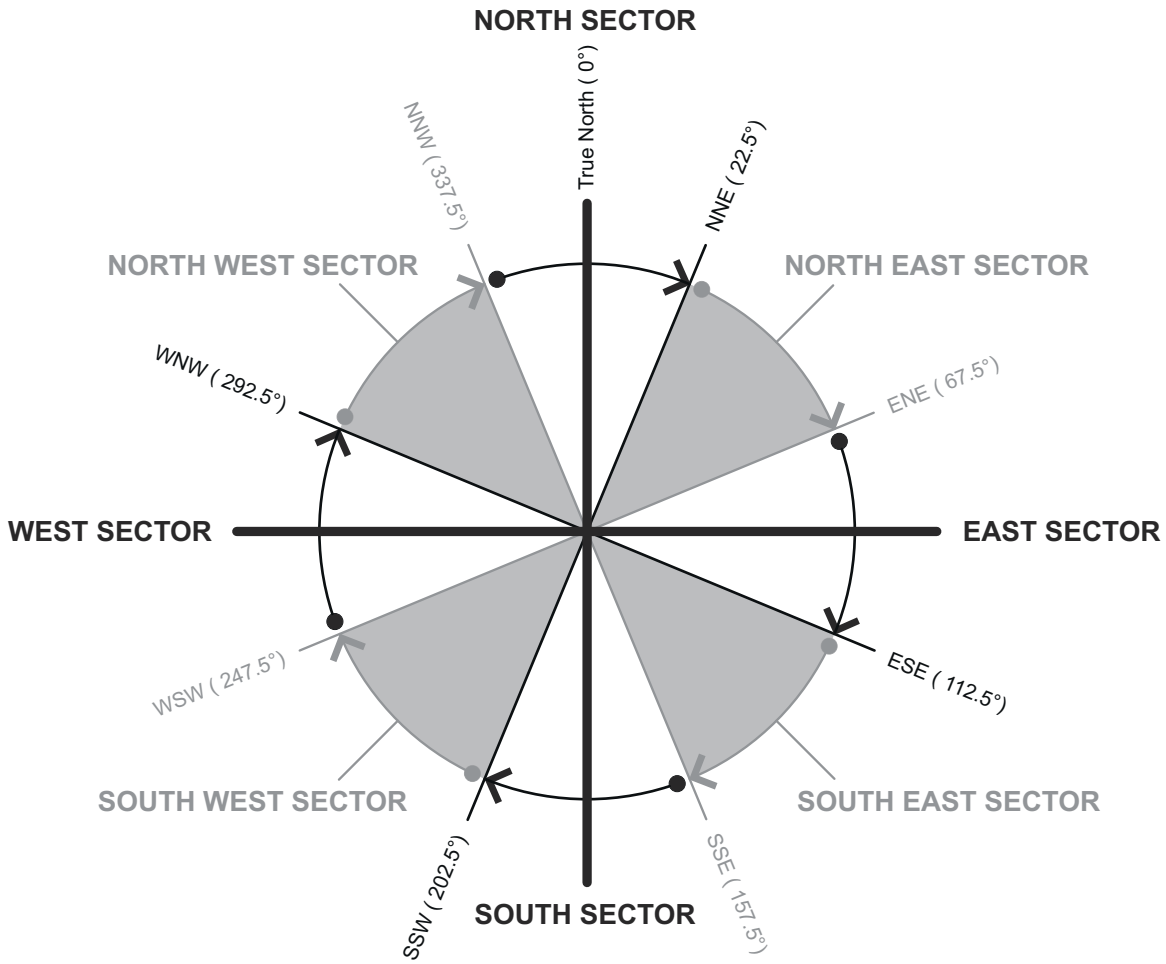

Figure Notes

(1) The direction that a wall or *glazing* element faces is the direction of a perpendicular line from the wall or *glazing* element.

(2) This Figure is based on True North and all angles are measured clockwise from True North. Survey angles on site

plans are usually marked in angles from True North. These angles can be used to establish True North for a particular site.

(3) Magnetic North, found by a magnetic compass, varies from True North over time and by different amounts in different locations. Magnetic North is not an acceptable approximation of True North.

(4) The eight orientation sectors shown in this Figure do not overlap at their boundaries. North sector, for example, begins just clockwise after the NNW line and ends exactly on the NNE line. The start and end of other sectors are determined in a similar way, as indicated by the outer curved arrows.

Insert NT Figure 13.2.5b as follows:

NT Figure 13.2.5b: Measurement of a projection for wall shading

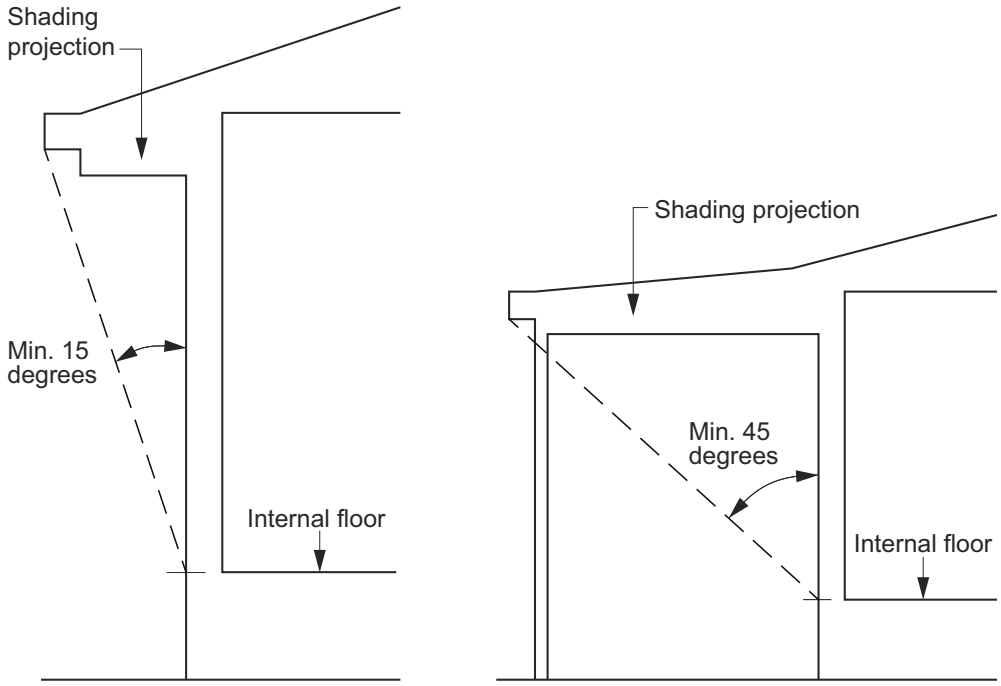

Figure Notes

Guttering can be considered as providing shading if attached to a shading projection.

Explanatory Information

Walls with a surface density of 220 kg/m^2 or more are deemed to achieve acceptable levels of thermal performance due to their ability to store heat and therefore slow the heat transfer through the building *fabric*. These walls are defined by surface density (kg/m^2), which is the mass of one vertical square metre of wall, in order to reduce the complexity when measuring the mass of walls with voids.

The following are examples of some typical wall constructions that achieve a surface density of 220 kg/m^2:

- Two leaves each of 90 mm thick or greater clay or concrete masonry.
- 140 mm thick or greater dense-weight hollow concrete or clay blocks with—
  - 10 mm plasterboard or render; and
  - at least one concrete grouted horizontal bond beam; and
  - vertical cores filled with concrete grout at centres not exceeding 1000 mm.
- 140 mm thick or greater concrete wall panels and dense-weight hollow concrete or clay blocks with all vertical cores filled with concrete grout.
- 190 mm thick or greater dense-weight hollow concrete or clay blocks with—
  - at least one concrete grouted horizontal bond beam; and
  - vertical cores filled with concrete grout at centres not exceeding 1800 mm.
- Earth-wall construction with a minimum wall thickness of 200 mm.

NT 13.2.6 Attached Class 10a buildings

[New for 2022]

A Class 10a building attached to a Class 1 building must—

(a) have an external *fabric* that achieves the *required* level of thermal performance for a Class 1 building; or

(b) be separated from the Class 1 building with construction having the *required* level of thermal performance for the Class 1 building.

Explanatory Information

The attachment of a Class 10a building, such as a garage, glasshouse, solarium, pool enclosure or the like should not compromise the thermal performance of the Class 1 building. In addition, the Class 10a building may be insulated and so assist the Class 1 building achieve the *required* thermal performance. Explanatory Figure NT 13.2.6 below depicts examples of a Class 1 building with an attached Class 10a garage.

Insert NT Figure 13.2.6 (explanatory) as follows:

NT Figure 13.2.6 (explanatory): Attached Class 10a building examples

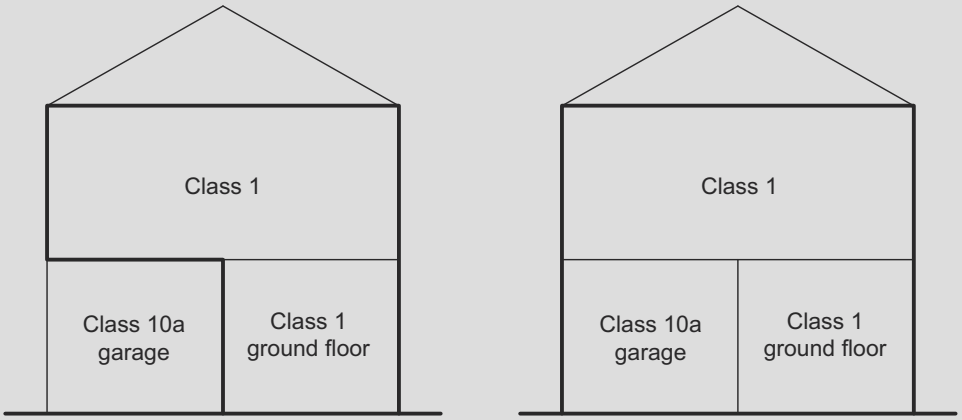

OPTION (a) – Elevation **OPTION (b) – Elevation**

Figure Notes

In (a), the thermal performance *required* for the Class 1 building may be achieved by the outside walls and floor of the Class 10a garage.

In (b), the thermal performance *required* for the Class 1 building may be achieved by the walls and floor of the Class 1 building as if the Class 10a garage is an under floor space with an enclosed perimeter.

NT Part 13.3 External glazing

NT 13.3.1 Application of Part 13.3

[New for 2022]

This Part applies to—

(a) a Class 1 building; and

(b) a Class 10a building with a *conditioned space*.

NT 13.3.2 External glazing

[New for 2022]

Compliance with this part is demonstrated with a "passed" result produced with the ABCB Glazing calculator certificate for the glazing in the building.

NT 13.3.3 Shading

[New for 2022]

Where shading is *required* to comply with NT 13.3.2, it must—

(a) be provided by an external permanent projection, such as a verandah, balcony, fixed canopy, eaves, shading hood or carport, which—

(i) extends horizontally on both sides of the *glazing* for a distance not less than the projection distance P in NT Figure 13.3.3; or

(ii) provide the equivalent shading to (i) with a reveal or the like; or

(b) be provided by an external shading device, such as a shutter, blind, vertical or horizontal building screen with blades, battens or slats, which—

(i) is capable of restricting at least 80% of the summer solar radiation; and

(ii) if adjustable, is readily operated either manually, mechanically or electronically by the building occupants.

Insert NT Figure 13.3.3 as follows:

NT Figure 13.3.3: Method of measuring P and H

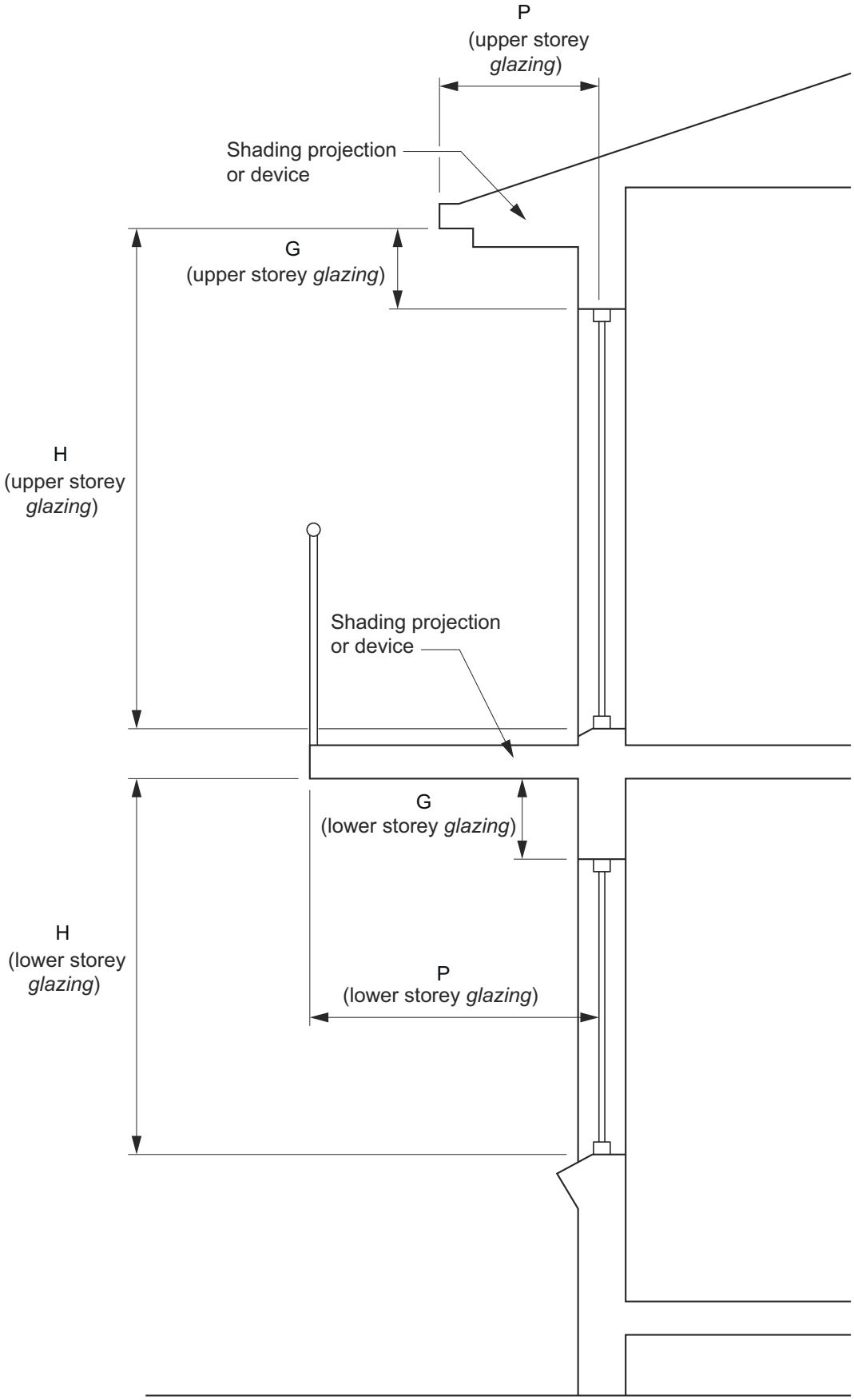

Figure Notes

(1) An external shading device that complies with NT 13.3.3(b) is considered to achieve a P/H value of 2.00.

(2) Where G exceeds 500 mm, the value of P must be halved.

Explanatory Information

- Shading devices can include fixed louvres, shading screens and other types of perforated or fixed angle slatted shades. However, such devices need to be designed for the climate and latitude to ensure that summer sun penetration is restricted, while winter sun access is achieved.
- Gutters can only be considered as providing shading if attached to a shading projection such as a verandah, fixed canopy, eaves, shading hood, balcony or the like.
- Shading devices can be either attached or located adjacent to the building. For example, a free-standing lattice screen may be considered to provide shading to *glazing* if it complies with NT 13.3.3(b)(ii).
- An adjustable shading device should be readily operated from a safe location or platform that does not require ladders, rigging, harnessing or the like.

NT Part 13.4 Building sealing

NT 13.4.1 Application of Part 13.4

[New for 2022]

This Part applies to—

(a) a Class 1 building; and

(b) a Class 10a building with a *conditioned space*.

Applications

This Part does not apply to:

(a) A building where the only means of air-conditioning is by using an evaporative cooler.

(b) A permanent building ventilation opening that is necessary for the safe operation of a gas appliance.

(c) A Class 10a building used for the accommodation of vehicles.

NT 13.4.2 Chimneys and flues

[New for 2022]

The chimney or flue of an open solid-fuel burning appliance must be provided with a damper or flap that can be closed to seal the chimney or flue.

NT 13.4.3 Roof lights

[New for 2022]

(1) A *roof light* must be sealed, or capable of being sealed, when serving a *conditioned space*.

(2) A *roof light required* by (1) must be constructed with—

(a) an imperforate ceiling diffuser or the like installed at the ceiling or internal lining level; or

(b) a weatherproof seal if it is a roof window; or

(c) a shutter system readily operated either manually, mechanically or electronically by the occupant.

NT 13.4.4 External windows and doors

[New for 2022]

(1) A seal to restrict air infiltration must be fitted to each edge of an external door, openable window and other such opening when serving a *conditioned space*.

(2) The following need not comply with (1):

(a) An external louvre door, louvre window or other such opening.

(b) A *window* complying with the maximum air infiltration rates specified in AS 2047.

(3) A seal *required* by (1) may be a foam or rubber compressible strip, fibrous seal or the like.

NT 13.4.5 Exhaust fans

[New for 2022]

An exhaust fan must be fitted with a sealing device such as a self-closing damper, filter or the like when serving a *conditioned space*.

Explanatory Information

An exhaust fan is considered to be adequately sealed if it is fitted with a filter such as the type commonly used in kitchen range hoods.

NT 13.4.6 Construction of ceilings, walls and floors

[New for 2022]

(1) Ceilings, walls, floors and any opening such as a *window* frame, door frame, *roof light* frame or the like must be constructed to minimise air leakage in accordance with (2) when forming part of the external fabric a *conditioned space*.

(2) Construction *required* by (1) must be—

(a) enclosed by internal lining systems that are close fitting at ceiling, wall and floor junctions; or

(b) sealed at junctions and penetrations with—

(i) by close-fitting skirting, architraves, cornices; or

(ii) expanding foam, rubber compressive strip, or caulking, or the like.

NT 13.4.7 Evaporative coolers

[New for 2022]

An evaporative cooler must be fitted with a self-closing damper or the like when serving a heated space.

Explanatory Information

The self-closing damper should create an effective seal against air infiltration.

NT Part 13.5 Air movement

NT 13.5.1 Application of Part 13.5

[New for 2022]

This Part applies to a *habitable room* in a Class 1 building.

NT 13.5.2 Air movement

[New for 2022]

(1) Air movement must be provided to *habitable rooms* in accordance with Table NT 13.5.2.

(2) Air movement *required* by (1) may be provided through an opening from an adjoining room (including an enclosed verandah) if—

(a) the adjoining room is not a *sanitary compartment*; and

(b) the opening between the adjoining room and the *habitable room* complies with Table NT 13.5.2 as if it were a *ventilation opening* to the *habitable room* or a proportion there of if some ventilation is provided from another source; and

(c) the *ventilation opening* to the adjoining room complies with Table NT 13.5.2 for the total area of the floor of the adjoining room and the proportion of the *habitable room* that is ventilated from the adjoining room.

Insert NT Table 13.5.2 as follows:

NT Table 13.5.2: Minimum total ventilation opening area as a percentage of the floor area for each habitable room

Climate zone	Minimum total *ventilation opening* area per *habitable room* (percentage of the area of the floor of the *habitable room*)		
	Without a ceiling fan or evaporative cooler	With a ceiling fan	With an evaporative cooler
1	15%	12.5%	15%
3	12.5%	7.5%	7.5%

NT 13.5.3 Ventilation openings

[New for 2022]

(1) The total *ventilation opening* area *required* by Table NT 13.5.2 to a *habitable room* must—

(a) be connected by a breeze path complying with (b) to another *ventilation opening* in another room or space; or

(b) be provided by a minimum of two ventilation openings located within the same *habitable room*, with each *ventilation opening* having an area of not less than 25% of the area *required* by Table NT 13.5.2.

(2) A breeze path *required* by (1)(a) must—

(a) pass through not more than two openings in the internal walls with each opening having an area of not less than 1.5 m^2; and

(b) have a distance along the breeze path between *ventilation opening* of not more than 20 m.

Explanatory Information

- *Ventilation openings* should be designed to allow the interior of the building to take full advantage of any natural breeze. Careful consideration should be given to the type and location of openings to ensure optimum effect is achieved and that internal “dead air pockets” are avoided.
- An opening may serve more than one breeze path.
- Two openings are stated in NT 13.5.3(2)(a) as the limit of the number of openings permitted in a breeze path. These

are typically doorways. Larger openings, such as those between adjoining lounge and dining areas in the same space are unlikely to restrict air movement significantly.

NT Part 13.7 Services

NT 13.7.1 Application of Part 13.7

[New for 2022]

This Part applies to—

(a) a Class 1 building; and

(b) a Class 10a building.

NT 13.7.2 Insulation of services

[New for 2022]

Thermal insulation for central heating water *piping* and heating and cooling ductwork must be—

(a) protected against the effects of weather and sunlight; and

(b) able to withstand the temperatures within the *piping* or ductwork.

Explanatory Information

The central heating water *piping* provisions apply to systems designed to heat the building via water, such as a hydronic heating system.

NT 13.7.3 Central heating water piping

[New for 2022]

(1) Central heating water *piping* that is not within a *conditioned space* must be thermally insulated to achieve the minimum *Total R-Value* of 0.6.

(2) Internal *piping* including—

(a) flow and return *piping* that is—

(i) within an unventilated wall space; or

(ii) within an internal floor between storeys; or

(iii) between ceiling insulation and a ceiling; and

(b) heated water piping encased in a concrete floor slab (except that which is part of a floor heating system), must in all *climate zones*, have a minimum material *R-Value* of 0.4.

(3) All *piping* located outside a building, or within a ventilated wall space, subfloor or roof space must have a minimum material *R-Value* of 0.6.

Explanatory Information

- The insulation levels in NT Explanatory Table 13.7.3 are typical examples of materials that can be used to insulate central heating water *R-Value*. Other methods are available for meeting the *Total R-Values required*.
- *Piping* within a timber member, such as that passing through a wall stud, is considered to have sufficient insulation.

Insert NT Table 13.7.3 (explanatory) as follows:

NT Table 13.7.3 (explanatory): R-Value of the insulation used for smaller diameter piping

Insulation	*R-Value*
9 mm of closed cell polymer	0.4
13 mm of closed cell polymer	0.6
19 mm of closed cell polymer	0.9

Insulation	*R-Value*
25 mm of closed cell polymer	1.3
25 mm of glasswool	1.3

NT 13.7.4 Heating and cooling ductwork

[New for 2022]

(1) Heating and cooling ductwork and fittings must—

(a) achieve the minimum *Total R-Value* in accordance with NT Table 13.7.4; and

(b) use thermal insulation material in accordance with AS/NZS 4859.1; and

(c) be sealed against air loss—

(i) by closing all openings in the surface, joints and seams of ductwork with adhesives, mastics, sealants or gaskets in accordance with AS 4254 for a Class C seal; or

(ii) for flexible ductwork, with a draw band in conjunction with a sealant or adhesive tape.

(2) Duct insulation located under a suspended floor, in an attached Class 10a building and in a roof space must—

(a) be protected by an outer sleeve of protective sheeting to prevent the insulation becoming damp; and

(b) have the outer protective sleeve sealed with adhesive tape not less than 48 mm wide creating an airtight and waterproof seal.

(3) The requirements of (1) do not apply to heating and cooling ductwork and fittings located within the insulated building *envelope* including a service riser within the *conditioned space*, internal floors between storeys and the like.

Insert NT Table 13.7.4 as follows:

NT Table 13.7.4: Heating and cooling ductwork and fittings – minimum total R-Value

Element	Minimum *R-Value* for ductwork and fittings		
	Evaporative cooling system	Heating-only system or refrigerated cooling-only system	Combined heat and refrigerated cooling system
Ductwork	0.6	1.0	1.5
Fittings	0.4		

Table Notes

The minimum material *R-Value required* for ductwork may be reduced by 0.5 for combined heating and refrigerated cooling systems if the ducts are—

(a) under a suspended floor with an enclosed perimeter; or

(b) in a roof space that has an insulation of greater than or equal to R0.5 directly beneath the roofing.

Explanatory Information

- Insulation for refrigerated cooling ductwork should have a vapour barrier to prevent possible damage by condensation.
- The insulation levels in NT Explanatory Tables 13.7.4a, 13.7.4b and 13.7.4c are typical examples of materials that can be used to insulate ductwork and fittings and the *R-Values* they contribute.
- For fittings, 11mm polyurethane typically provides an *R-Value* of 0.4.
- NT Explanatory Tables 13.7.4a, 13.7.4b and provides *R-Values* for typical ductwork insulation materials:

Insert NT Table 13.7.4a (explanatory) as follows:

NT Table 13.7.4a (explanatory): Flexible ductwork

Insulating material and thickness	*R-Value*
45 mm glasswool (11 kg/m^3)	1.0
70 mm polyester (6.4 kg/m^3)	1.0
63 mm glasswool (11 kg/m^3)	1.5
90 mm polyester (8.9 kg/m^3)	1.5
85 mm glasswool (11 kg/m^3)	2.0

Insert NT Table 13.7.4b (explanatory) as follows:

NT Table 13.7.4b (explanatory): Sheetwork ductwork – external insulation

Insulating material and thickness	*R-Value*
38 mm glasswool (22 kg/m^3)	1.0
50 mm polyester (20 kg/m^3)	1.1
50 mm glasswool (22 kg/m^3)	1.5
75 mm polyester (20 kg/m^3)	1.7

Insert NT Table 13.7.4c (explanatory) as follows:

NT Table 13.7.4c (explanatory): Sheetmetal ductwork – internal insulation

Insulting material and thickness	*R-Value*
38 mm glasswool (32 kg/m^3)	1.0
50 mm polyester (32 kg/m^3)	1.3
50 mm glasswool (32 kg/m^3)	1.5

NT 13.7.5 Water heater in a heated water supply system

[New for 2022]

A water heater in a heated water supply system must be designed and installed in accordance with Part B2 of NCC Volume Three – Plumbing Code of Australia.

Schedule 2 Referenced documents

Insert NT Table 1 as follows:

NT Table 1: Schedule of referenced documents

No.	Date	Title	Volume One	Volume Two	Housing Provisions
AS/NZS 1170 Part 2	2011	Structural design actions: Wind actions Amdt 1, 2, 3, 4 and 5	NT S4C3	N/A	N/A
AS 2047	2014	Windows and external glazed doors in buildings (incorporating amendments 1 and 2) See Note	B1D4, F3V1, F3D4	H1D8, H2V1	NT 13.4.4
AS 3660 Part 1	2014	Termite management: New building work	NT B1D4	N/A	NT 3.4.1(2), NT 3.4.2
AS 4254 Part 1	2012	Ductwork for air handling systems in buildings — Flexible duct	N/A	N/A	NT 13.7.4
AS 4254 Part 2	2012	Ductwork for air handling systems in buildings — Rigid duct	Spec 7	N/A	NT 13.7.4
AS/NZS 4859.1	2018	Thermal insulation materials for buildings — General criteria and technical provisions	N/A	N/A	NT 13.2.2, NT 13.7.4
BCA 2009	May 2009	Building Code of Australia	NT Section J	N/A	N/A
BCA 2019	May 2009	Building Code of Australia	NT Section J	N/A	N/A

Table Notes

For AS 2047:

(a) Tests carried out under earlier editions of AS 2047 remain valid.

(b) Reports based on AS 2047 relating to tests carried out after the NCC reference date for AS 2047—2014 Amendment 2 must relate to the amended Standard.

Schedule 7 Queensland

3	**Site preparation**	
	Part 3.4	Termite risk management
	3.4.1	Requirements for termite management systems
	QLD 3.4.2	Termite management systems
Schedule 1	**Definitions**	
Schedule 2	**Referenced documents**	

3 Site preparation

Part 3.4 Termite risk management

3.4.1 Requirements for termite management systems

[2019: 3.1.4.2]

Insert subclause QLD 3.4.1(3) in clause 3.4.1 as follows:

(3) A termite management system installed in a Class 1 or 10 building minimise the risk of termite attack to *primary building elements* shall be in accordance with clause 3.4.2.

Insert subclause QLD 3.4.1(4) in clause 3.4.1 as follows:

(4) The termite management system required by (3) must have—

(a) for a non-temporary Class 1 building, a design life of at least 50 years; or

(b) for other than a non-temporary Class 1 building, a design life of at least 50 years or the specified design life of the building, whichever is the lesser.

Insert subclause QLD 3.4.1(5) in clause 3.4.1 as follows:

(5) A termite management system need not comply with (4) if it is easily and readily accessible for replenishment or replacement and is capable of being replenished or replaced.

Insert subclause QLD 3.4.1(6) in clause 3.4.1 as follows:

(6) Where a chemical is used as an external perimeter termite management system, it must be—

(a) installed by excavating trenches, treating the exposed trench and backfilling the trench with treated material; and

(b) covered by a concrete cover strip not less than 50 mm thick and 300 mm wide measured from the external wall of the building.

Delete 3.4.2 and insert QLD 3.4.2 as follows:

QLD 3.4.2 Termite management systems

[2019: QLD 3.1.4.3]

Where a termite management system is required it must—

(a) be selected appropriate to QLD Table 3.4.2; and

(b) comply with—

(i) AS 3660.1 subject to clauses QLD 3.4.1(4), (5) and (6); or

(ii) have been tested and passed the tests *required* by Section 5 of AS 3660.3; and

(c) have a durable notice installed in accordance with 3.4.3; and

(d) where a chemical termite management system is used, the chemical must be included on the *appropriate authority's* pesticides register.

Insert QLD Table 3.4.2 as follows:

QLD Table 3.4.2: Acceptable termite management systems and components (per AS 3660.1)

Footing system	Slab edge exposure	Termite shielding	Stainless steel mesh	Graded stone	Chemicals
Concrete slab on ground complying with AS 2870: Penetrations and control joints	Not suitable	Not suitable	Component; or full system subject to 3.4.1(4)	Component; or full system subject to 3.4.1(4)	Full system beneath slab subject to 3.4.1(4) and (5)

Footing system	Slab edge exposure	Termite shielding	Stainless steel mesh	Graded stone	Chemicals
Concrete slab on ground complying with AS 2870: Slab perimeter	Suitable subject to 3.4.1(4)	Not suitable	Component; or full system subject to 3.4.1(4)	Component; or full system subject to 3.4.1(4)	Perimeter system subject to 3.4.1(4) and (6)
Concrete slab on ground not complying with AS 2870: Beneath slab (includes penetrations and control joints)	Not suitable	Not suitable	Full system subject to 3.4.1(4)	Full system subject to 3.4.1(4)	Full system beneath slab subject to 3.4.1(4) and (5)
Concrete slab on ground not complying with AS 2870: Slab perimeter	Suitable subject to 3.4.1(4)	Not suitable	Full system subject to 3.4.1(4)	Full system subject to 3.4.1(4)	Perimeter system subject to 3.4.1(4) and (6)
Suspended floors	Not applicable	Suitable subject to 3.4.1(4)	Suitable subject to 3.4.1(4)	Component; or full system subject to 3.4.1(4)	Full system subject to 3.4.1(4)

Schedule 1 Definitions

Primary building element

For the purposes of—

(1) Volume One, a member of a building designed specifically to take part of the loads specified in B1D3 and includes roof, ceiling, floor, stairway or ramp and wall framing members including bracing members designed for the specific purpose of acting as a brace to those members; or

(2) Volume Two—

(a) A member of a building specifically designed to take part of the building loads and includes roof, ceiling, floor, stairway or ramp and wall framing members including bracing members designed for the specific purpose of acting as a brace to those members; and

(b) door jambs, window frames and reveals, architraves and skirtings.

Explanatory Information

The loads to which a building may be subjected are dead, live, wind, snow and earthquake loads. Further information on building loads can be found in the AS 1170 series of Standards.

Schedule 2 Referenced documents

Insert QLD Table 1 as follows:

QLD Table 1: Schedule of referenced documents

No.	Date	Title	Volume One	Volume Two	Housing Provisions
BCA 2009	May 2009	Building Code of Australia	QLD Section J	N/A	N/A
N/A	December 2017	Queensland Government, Department of Agriculture, Fisheries and Forestry – Construction timbers in Queensland: Book 1 and Book 2: Properties and specifications for satisfactory performance of construction timbers in Queensland – Class 1 and 10 buildings (Houses, carports, garages, greenhouses and sheds)	QLD B1D4	QLD H1D6	N/A
N/A	N/A	Building Act 1975	N/A	QLD H7P1, QLD H7D2	N/A
		Queensland Development Code MP 4.1 – Sustainable buildings	Section J	Part H6	Section 13

Schedule 8 South Australia

4	**Footings and slabs**	
	Part 4.2	Footings, slabs and associated elements
	SA 4.2.8	Damp-proofing membrane
	SA 4.2.10	Concrete
9	**Fire safety**	
	Part 9.2	Fire separation of external walls
	SA 9.2.1	External walls of Class 1 buildings
	9.2.2	Measurement of distances
	9.2.4	Class 10a buildings
	SA 9.2.8	Open carports
	SA 9.2.9	Allowable encroachments
10	**Health and amenity**	
	Part 10.2	Wet area waterproofing
	SA 10.2.1	Wet areas
	SA 10.2.33	Provision of floor wastes
13	**Energy efficiency**	
	Part 13.1	Scope and application of Section 13
	SA 13.1.2	Application
Schedule 1	**Definitions**	
Schedule 2	**Referenced documents**	

4 Footings and slabs

Part 4.2 Footings, slabs and associated elements

Delete 4.2.8 and insert SA 4.2.8 as follows:

SA 4.2.8 Damp-proofing membrane

[2019: SA 3.2.2.6]

A continuous damp-proofing membrane must be installed under slab-on-ground construction for all Class 1 buildings and for Class 10 buildings where the slab is continuous with the slab of a Class 1 building as follows—

(a) Materials: A damp-proofing membrane must be—

(i) 0.2 mm nominal thickness polyethylene film; and

(ii) high impact resistant with resistance to puncturing and moisture penetration, determined in accordance with criteria specified in clause 5.3.3.3 of AS 2870; and

(iii) branded continuously "AS 2870 Concrete underlay, 0.2 mm High impact resistance" together with the manufacturer's or distributor's name, trade mark or code.

(b) Installation: A damp-proofing membrane must be installed as follows—

(i) lap not less than 200 mm at all joints; and

(ii) tape or seal with a close fitting sleeve around all service penetrations; and

(iii) fully seal where punctured (unless for service penetrations) with additional polyethylene film and tape.

(c) The damp-proofing membrane must be placed beneath the slab so that the bottom surface of the slab is entirely underlaid and extends under edge beams to finish at ground level in accordance with Figure 4.2.8.

Delete 4.2.10 and insert SA 4.2.10 as follows:

SA 4.2.10 Concrete

[2019: SA 3.2.3.1(d) to (g)]

Concrete must comply with the following:

(a) Concrete must be manufactured to comply with AS 3600; and—

(i) have a strength at 28 days of not less than 20 MPa (denoted as N20 grade); and

(ii) have a 20 mm maximum nominal aggregate size; and

(iii) have a nominal 100 mm slump.

(b) Water must not be added to the mix to increase the slump to a value in excess of that specified.

(c) Concrete must be placed, compacted and cured in accordance with good building practice.

(d) Concrete in slabs must be adequately compacted, and slab surfaces, including edges, moist cured for 7 days.

(e) After vertical surfaces are stripped of formwork, slab edges must be finished prior to curing.

(f) Loading of concrete slabs with stacked materials or building plant must not occur for a minimum of 7 days after pouring although construction of wall frames and setting out brickwork may be undertaken during this period.

(g) Concrete must not be poured if the air temperature on *site* exceeds 32ºC unless written instructions from a *Professional Engineer* are followed.

Explanatory Information

- Complete discharge of the concrete from the truck should be made within one and a half hours of initial mixing with water unless a suitable retarder has been specified.
- Compacting concrete by vibration removes air pockets and works the concrete thoroughly around reinforcement, service penetrations etc. and into corners of formwork to increase durability and resistance to termite infestation and salt damp attack. Care should be taken not to over-vibrate. The finishing and curing of slab edges provides an improved edge finish which is resistant to edge dampness.

- Care should be taken when using chemical curing methods, because some products may not be compatible with adhesives used to fix surface finishes to the slab.

9 Fire safety

Part 9.2 Fire separation of external walls

Delete 9.2.1 and insert SA 9.2.1 as follows:

SA 9.2.1 External walls of Class 1 buildings

[2019: SA 3.7.2.2(b) and (c)]

An *external wall* of a Class 1 building, and any openings in that wall, must comply with 9.2.3 if the wall is less than—

(a) 900 mm from an allotment boundary other than the boundary adjoining a road alignment or other public space; or

(b) 1.8 m from another building on the same allotment other than an appurtenant Class 10 building associated with the Class 1 building or a detached part of the same Class 1 building; or

(c) 3 m from a *brush fence*.

9.2.2 Measurement of distances

[2019: 3.7.2.3]

Insert subclause SA 9.2.2(4) in clause 9.2.2 as follows:

(4) The distance from any point on an *external wall* of a building to a *brush fence* is measured in any direction from the *external wall*.

9.2.4 Class 10a buildings

[2019: 3.7.2.5]

Insert subclause SA 9.2.4(3) in clause 9.2.4 as follows:

(3) A carport or verandah may have timber posts and timber roof support beams regardless of their distance from the boundary.

Insert subclause SA 9.2.4(4) in clause 9.2.4 as follows:

(4) A Class 10b *brush fence* must not be constructed within 3 m of a Class 1 building unless any part of the building within 3 m of the *brush fence* complies with the *fire-resisting* requirements of 9.2.1, 9.2.2, 9.2.3 and 9.2.9.

Delete 9.2.8 and insert SA 9.2.8 as follows:

SA 9.2.8 Open carports

[2019: SA 3.7.2.6(a)]

A Class 10a carport is exempt from complying with 9.2.4(1) if—

(a) it has—

(i) two or more sides open and not less than one third of its perimeter open and, for the purpose of this clause, a side is considered to be open if the roof covering adjacent to that side is not less than 500 mm from another building or allotment boundary; or

(ii) any part of the *external wall* of the Class 1 building located less than 2 m from the allotment boundary or less than 4 m from another Class 1 building on the same allotment is *fire-resisting* to the underside of a *non-combustible* roof covering or to the underside of a *non-combustible* ceiling lining (see SA Figure 9.2.8a, SA Figure 9.2.8b and SA Figure 9.2.8c); and

(b) it has polycarbonate or *non-combustible* roof covering and any ceiling lining and wall cladding, including gables, is also *non-combustible* (see Figure 9.2.8a); and

(c) it does not provide direct vertical support to any part of the Class 1 building; and

(d) in the case where it has a common roof structure with the Class 1 building and the carport or verandah does not have a ceiling (see Figure 9.2.8b), the opening between the top of the wall of the Class 1 building and the

underside of the roof covering is infilled with—

(i) *non-combustible* material; or

(ii) construction with *non-combustible* material on the carport or verandah side; and

(e) in the case where two carports or verandahs have a common roof structure with two different Class 1 buildings and the carports or verandahs have a ceiling, the roof space or ceiling space between the top of the ceiling and the underside of the roof covering is infilled as follows—

(i) vertically between the two Class 1 buildings and between the two appurtenant carports of verandahs in accordance with (d) (see SA Figure 9.2.8d); or

(ii) vertically between the two Class 1 buildings and between the two appurtenant carports or verandahs in accordance with (d), except that the construction must be clad with *non-combustible* materials on both sides and must not be crossed by timber or other *combustible* building elements except for roof battens with dimensions of 75 × 50 mm or less, roof sarking-type material or a timber gutter board not less than 20 mm thick.

Insert SA Figure 9.2.8a as follows:

SA Figure 9.2.8a: Fire-resisting requirements for carports or verandahs without a ceiling

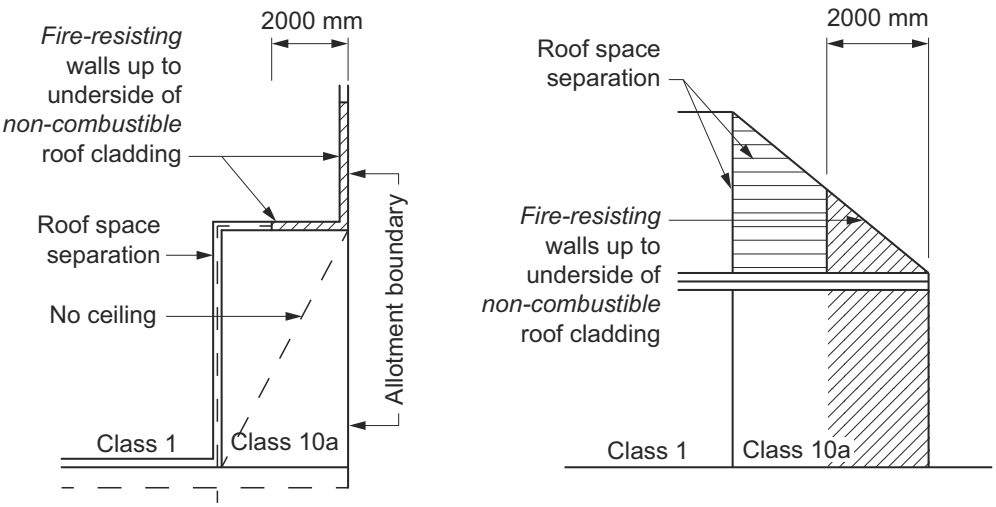

Insert SA Figure 9.2.8b as follows:

SA Figure 9.2.8b: Fire-resisting requirements for carports or verandahs with a non-combustible ceiling

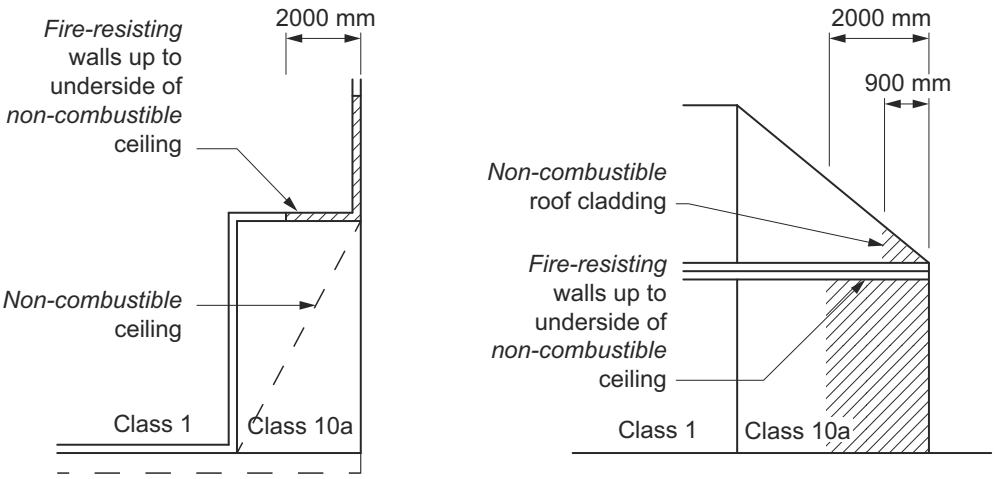

Insert SA Figure 9.2.8c as follows:

SA Figure 9.2.8c: Fire-resisting requirements for external walls in carports and verandahs that share a common roof space

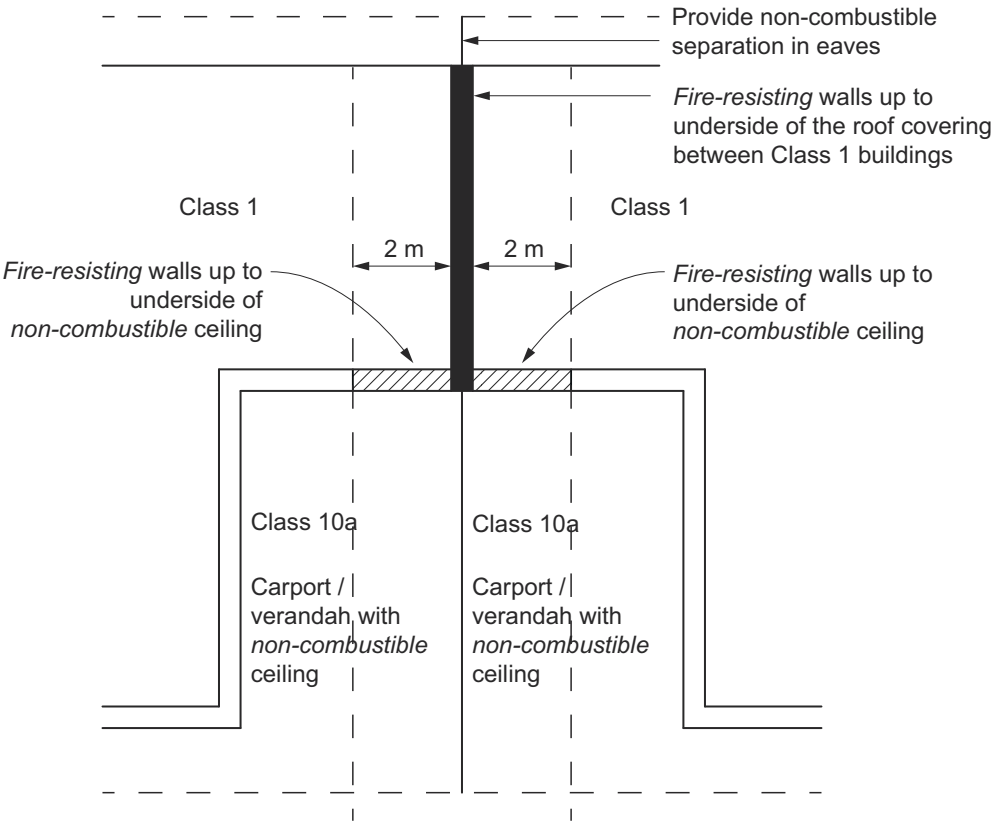

Insert SA Figure 9.2.8d as follows:

SA Figure 9.2.8d: Fire-resisting requirements for roof space openings in carports and verandahs with a ceiling that share a common roof space

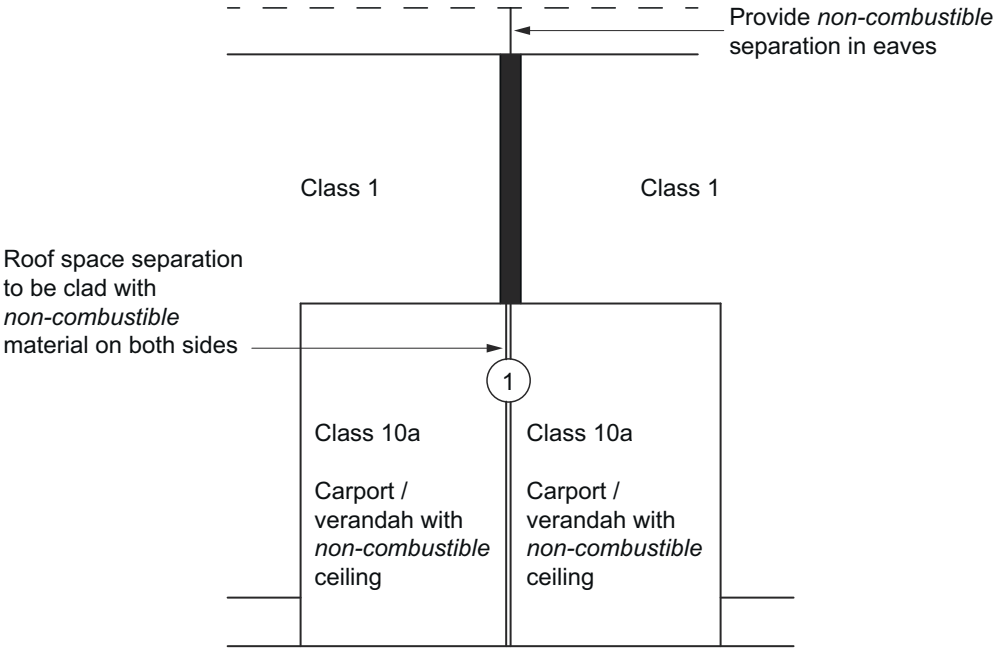

NOTE: If under main roof, provide roof separation at 1 from ceiling to underside of *non-combustible* roof cladding

Delete 9.2.9 and insert SA 9.2.9 as follows:

SA 9.2.9 Allowable encroachments

[2019: SA 3.7.2.7]

(1) An encroachment is any construction between—

(a) the *external wall* of the building and the allotment boundary other than a boundary adjoining a road or other public space; or

(b) the *external walls* of two buildings on the same allotment; or

(c) the *external wall* of the building and a *brush fence*.

(2) For the purposes of (1), an encroachment related to any *external wall* of—

(a) a Class 10a building *required* to comply with 9.2.4; or

(b) a Class 1 building.

(3) The encroachments allowed within 900 mm of an allotment boundary or within 1.8 m of another building on the same allotment or within 3 m of a *brush fence* are—

(a) *non-combustible* fascias, gutters and downpipes; and

(b) light fittings, electricity or gas meters, aerials or antennas; and

(c) pergolas, sun blinds or water tanks; and

(d) unroofed terraces, landings, steps and ramps, not more than 1 m in height.

(4) Except as permitted by (5) or not permitted by (6), encroachments allowed up to but not closer than 450 mm from an allotment boundary or up to but not closer than 900 mm from another building on the same allotment or associated encroachments of another building on the same allotment are—

(a) *combustible* fascias, gutters and downpipes (see Figures 9.2.9a, 9.2.9b and 9.2.9c); and

(b) eaves with *non-combustible* roof cladding and *non-combustible* lining; and

(c) flues, chimneys, pipes, domestic fuel tanks, cooling or heating appliances or other services.

(5) Eaves with *non-combustible* roof cladding and *non-combustible* soffit or lining may encroach within 450 mm of the allotment boundary where the *external walls* of a building are located not less than 900 mm from the allotment boundary and the walls are positioned at an angle of not less than 20 degrees and not more than 70 degrees to the allotment boundary or other building and the eaves only encroach at the corner of the roof (see SA Figure 9.2.9).

(6) Fascias listed in (4)(a) must not be built within 3 m of a *brush fence*.

Insert SA Figure 9.2.9 as follows:

SA Figure 9.2.9: Concession for encroachment of eaves

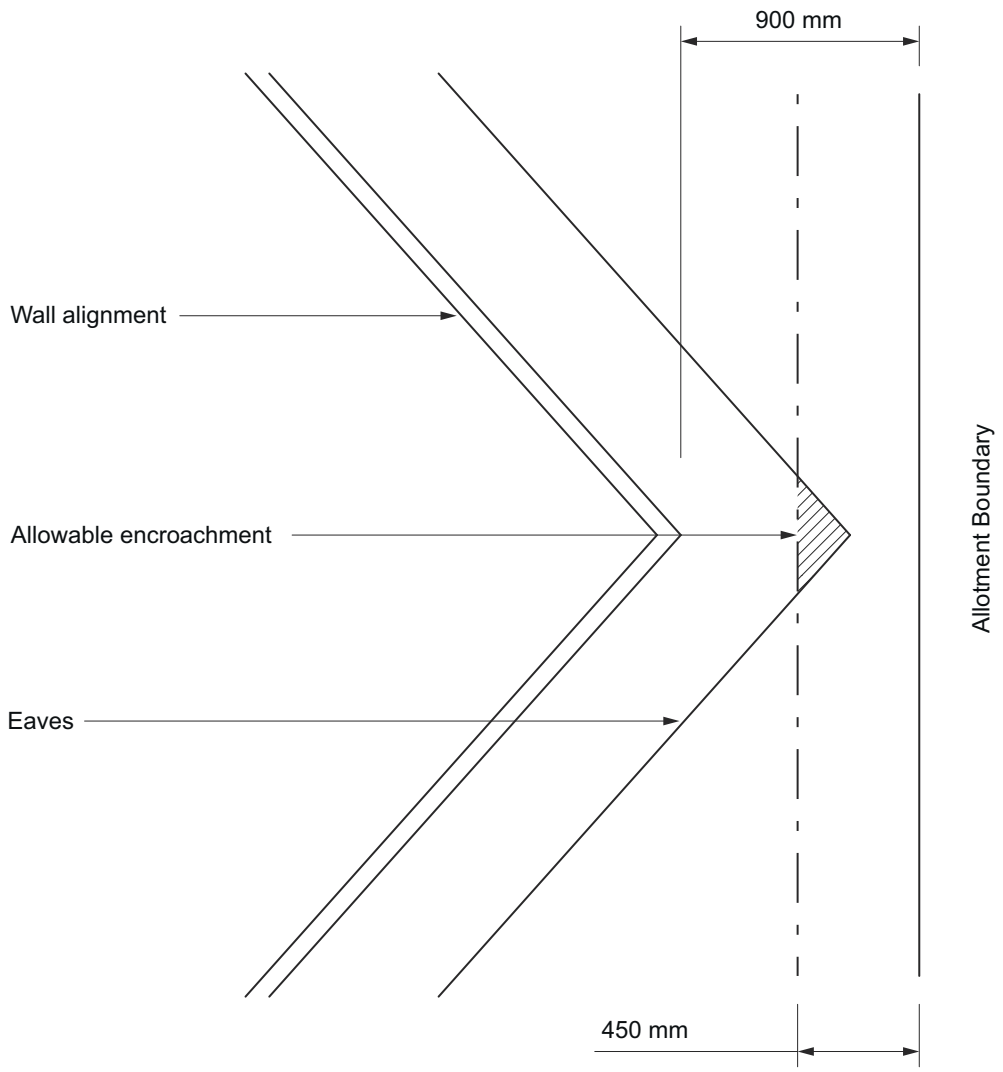

10 Health and amenity

Part 10.2 Wet area waterproofing

Delete 10.2.1 and insert SA 10.2.1 as follows:

SA 10.2.1 Wet areas

[2019: SA 3.8.1.2]

Building elements in *wet areas* within a building must—

(a) be *waterproof* or *water resistant* in accordance with 10.2.2 to 10.2.6, except that—

(i) in any room containing a washing machine, the wall area from finished floor level to a minimum of 75 mm above and 75 mm each side of the washing machine tap outlets must be *water resistant*; and

(ii) where a *vessel* is inset into a bench top in a kitchen, bar area, kitchenette or domestic food and beverage preparation area—

(A) wall junctions and joints within 150 mm above the *vessel* must be *water resistant* for the extent of the *vessel*; and

(B) the perimeter edges of the *vessel* must be *water resistant* for the extent of the *vessel* (see SA Figures 10.2.1a, 10.2.1b and 10.2.1c); and

(C) penetrations in horizontal surfaces for tap and spout outlets in kitchens, bar areas, kitchenettes or domestic food and beverage preparation areas, must be *waterproof*; and

(b) comply with AS 3740; and

(c) have floor wastes provided in accordance with SA 10.2.33; and

(d) where floor wastes are provided for drainage of floors in bathrooms and laundries, the floors, floor/wall junction and penetration must be *waterproof*.

Insert SA Figure 10.2.1a as follows:

SA Figure 10.2.1a: Typical water resistant junctions and joints for bench tops with inset vessels and vessels abutting walls

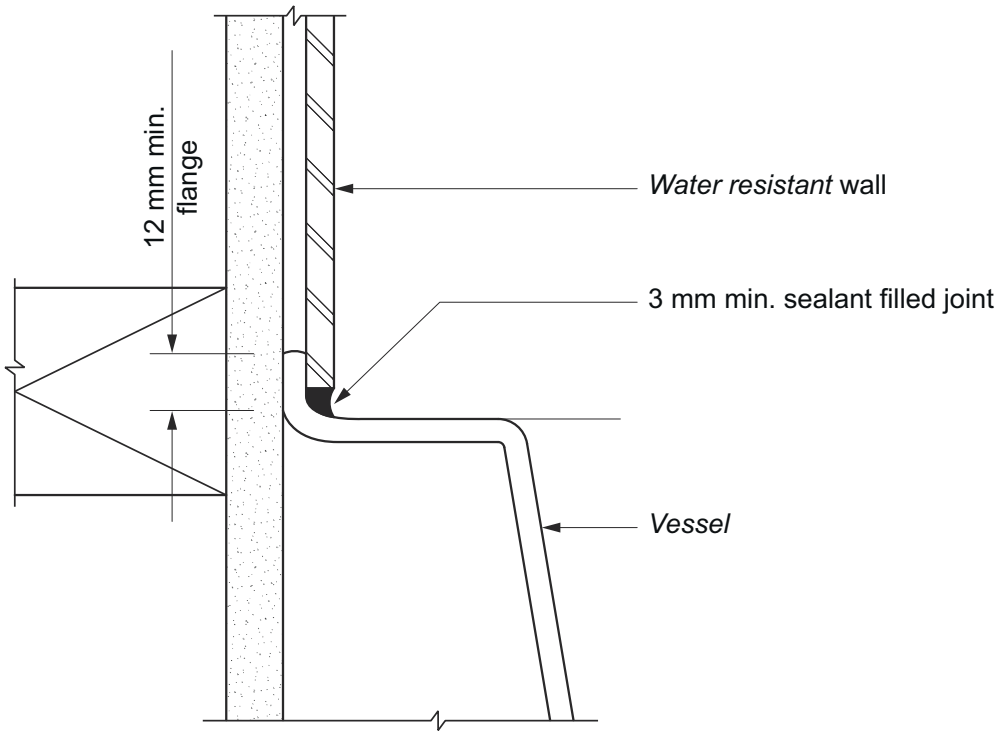

Insert SA Figure 10.2.1b as follows:

SA Figure 10.2.1b: Typical water resistant junctions and joints for bench tops with inset vessels and vessels abutting walls

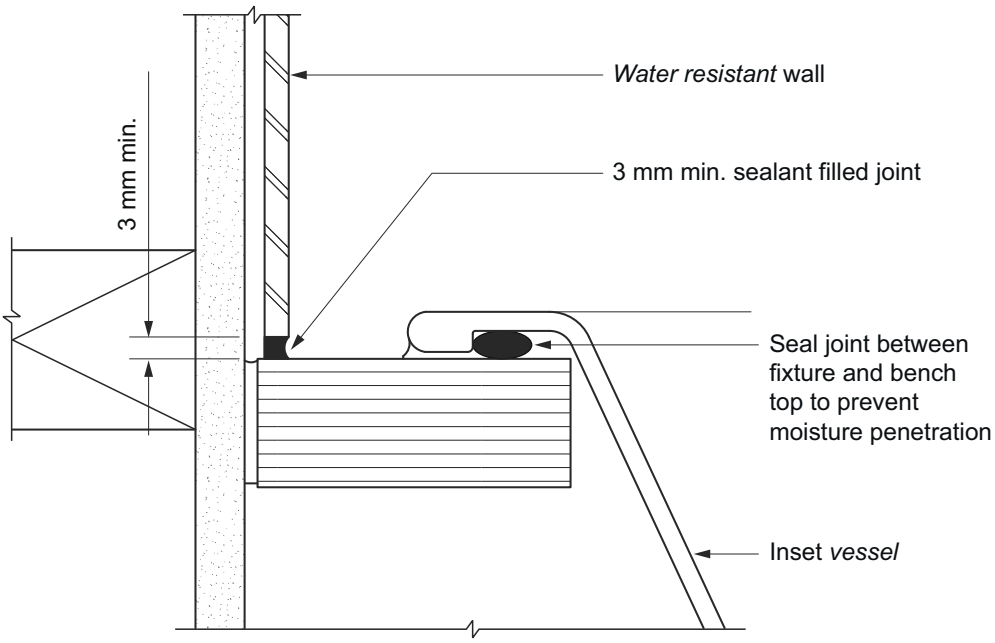

Insert SA Figure 10.2.1c as follows:

SA Figure 10.2.1c: Typical water resistant junctions and joints for bench tops with inset vessels and vessels abutting walls

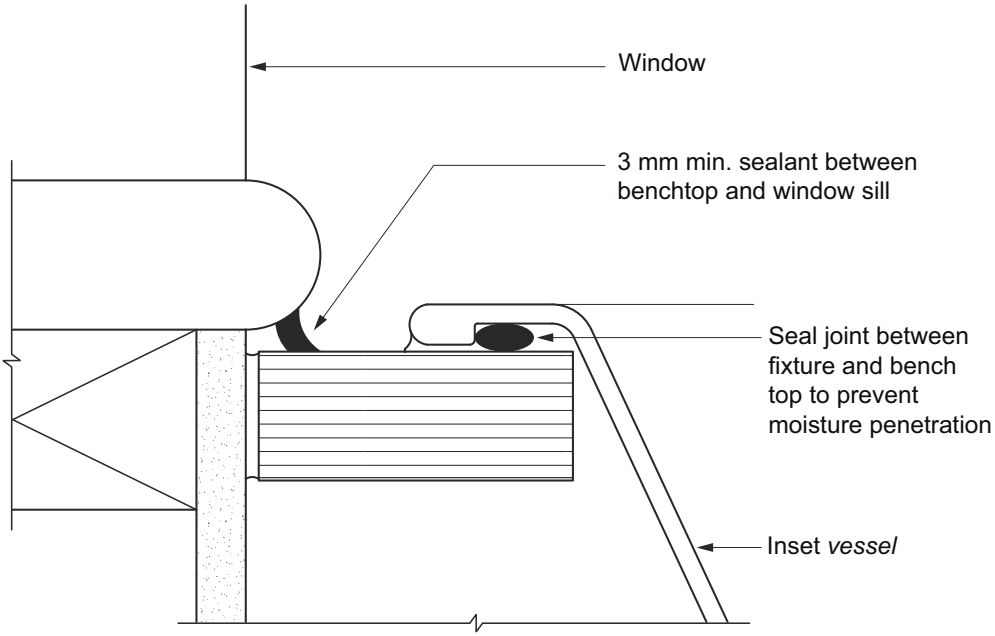

Insert SA 10.2.33 as follows:

SA 10.2.33 Provision of floor wastes

[2019: SA 3.2.2]

(1) The floor of a wet area containing a *vessel* must be graded to a floor waste to permit drainage of water.

(2) A floor need not be graded to the floor waste as required by (1) if—

(a) all vessels are provided with in-built overflow protection or have a permanent open trapped connection to the plumbing and drainage system (such as a WC pan); or

(b) the floor waste is provided solely for the connection of plumbing fixtures and all vessels in the wet area are

provided with in-built overflow protection or have permanent open trapped connection to the plumbing and drainage system (such as a WC pan).

(3) A floor of a wet area that is graded without ponding to a floor waste within the shower area will satisfy (1).

(4) The fall of the floor surface graded to the floor waste in accordance with (1) or (3) must be in accordance with 10.2.12.

13 Energy efficiency

Part 13.1 Scope and application of Section 13

Delete 13.1.2 and insert SA 13.1.2 as follows:

SA 13.1.2 Application

[2019: SA Note to Part 3.12]

(1) The application of this Section is subject to the following:

(a) The Governing Requirements of NCC Volume Two.

(b) The State and Territory variations, additions and deletions contained in the Schedules to the ABCB Housing Provisions and NCC Volume Two.

(2) In South Australia, for the purposes of Section 13, a sunroom or the like is deemed to be a Class 10a building and must comply with 13.2.7.

Explanatory Information

In NCC 2019, the content of Section 13 of the ABCB Housing Provisions (other than content added in NCC 2022 or later) was contained in the acceptable construction practices for Part 3.12 of NCC 2019 Volume Two.

Schedule 1 Definitions

Agriculture: Cropping, grazing, animal husbandry, intensive animal keeping, horticulture, aquaculture, wool shearing or dairy, but not viticulture or forestry.

Assembly building

A building where people may assemble for—

(a) civic, theatrical, social, political or religious purposes including a library, theatre, public hall or place of worship; or

(b) educational purposes in a *school*, *early childhood centre*, preschool, or the like; or

(c) entertainment, recreational or sporting purposes including—

(i) a discotheque or nightclub; or

(ii) a cinema; or

(iii) a sports stadium, sporting or other club; or

(d) transit purposes including a bus station, railway station, airport or ferry terminal.

Brush fence: A fence or gate that is primarily constructed of Broombrush (Melalueca Uncinata).

Bulk grain storage facility: A building or structure used for the commercial bulk handling or storage of granular materials such as grain, ore, or the like, where only a small number of occupants are present at one time and includes *cell type silos* and *storage sheds*.

Cell type silo: A type of *bulk grain storage facility* similar to that illustrated in diagram (a) of Figure SA 1.

Insert SA Figure 1 as follows:

SA Figure 1: Two types of bulk grain storage facilities

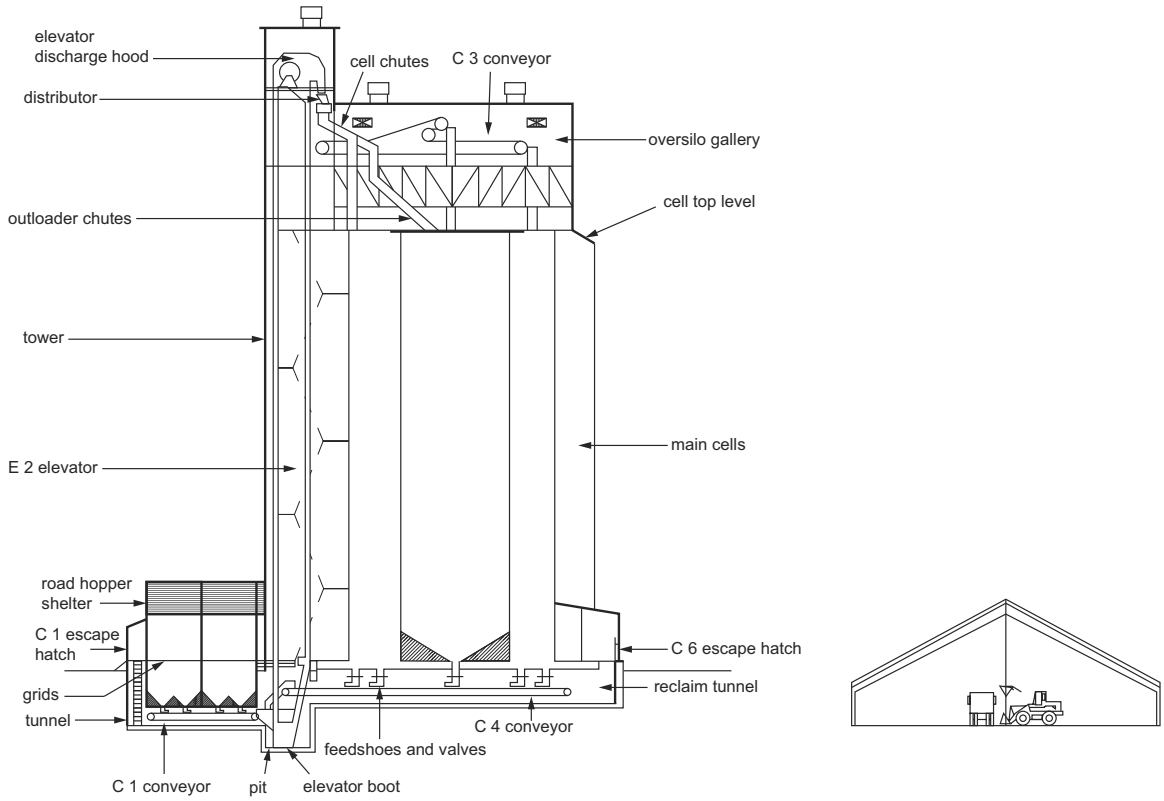

(a) *Cell type silo* (b) *Storage shed*

Farm building

A single *storey* Class 7 or 8 building that is—

(a) primarily associated with *agriculture* and located on land used primarily for *agriculture*; and

(b) the total number of people accommodated in the building does not exceed one person per 200 m^2 of total *floor area*, or six people, whichever is greater; and

(c) the *floor area* of each building does not exceed the maximum *floor area* and volume specified in Table SA 1 for the type of *farm building*; and

(d) the building does not contain occupancies of excessive fire hazard as listed in E1D5 to E1D13; and

(e) if the building is used for the storage of hay, an open space complying with C3D5(1) is provided around the perimeter of each building.

Insert SA Table SA 1 as follows:

SA Table SA 1: Farm building categories and maximum floor area

Building group	Type of farm building	Maximum floor area	Maximum volume
Group A	Buildings used for keeping, growing and/or harvesting of animals and/or plants, and includes greenhouses with rigid covering material and large implement/vehicle storage sheds.	5,000 m^2	30,000 m^3
Group B	Buildings used for packing, sorting and/or storage of produce and may include workshops.	2,000 m^2	12,000 m^3
Group C	Greenhouses with non-rigid, plastic or fabric covering material.	5,000 m^2	30,000 m^3

Rainwater tank: A vessel for the storage of *surface water* collected from the *roof catchment area* of the building.

Roof catchment area: The area of the roof (expressed in square metres), measured on the horizontal (no allowance for slope or vertical surfaces) and includes the plan area of the gutters.

Small arts venue: The whole or the only part of a building that has a rise in storeys of not more than 2—

(a) in which cultural activities including live music, visual arts displays, dancing, poetry and spoken word performances are provided to the public; and

(b) the floor area used as a *small arts venue* does not exceed 300 m^2; and

(c) no pyrotechnics or theatrical smoke (smoke machines, hazers or the like) are used.

Storage shed: A type of *bulk grain storage facility* similar to that illustrated in diagram (b) of Figure SA 1.

Schedule 2 Referenced documents

Insert SA Table 1 as follows:

SA Table 1: Schedule of referenced documents

No.	Date	Title	Volume One	Volume Two	Housing Provisions	Volume Three
AS/NZS 1260	2017	PVC-U pipes and fittings for drain, waste and vent applications Amdt 1	N/A	N/A	N/A	C1D3
AS 1428 Part 1	2001	Design for access and mobility – General requirements for access – New building work	N/A	SA H10D4	N/A	N/A
AS/NZS 1891 Part 4	2000	Industrial fall-arrest systems and devices: Selection, use and maintenance	SA G8D3	N/A	N/A	N/A
enHealth Council, Department of Health and Ageing	2004	Guidance on the use of rainwater tanks	N/A	SA H9D5	N/A	N/A
—	See Note 1	Planning and Design Code	SA G5D5	SA H7D4(3)	N/A	N/A

Table Notes

(1) The Planning and Design Code is the version current at the time of project documentation approval, unless noted otherwise.

Schedule 9 Tasmania

10 Health and amenity

Part 10.4 Facilities

TAS 10.4.3 Installation of closet fixtures

13 Energy efficiency

TAS Part 13.1 Scope and application of Section 13

TAS Part 13.2 Building fabric

TAS Part 13.3 External glazing

TAS Part 13.4 Building sealing

TAS Part 13.5 Ceiling fans

TAS Part 13.6 Whole-of-home energy usage

TAS Part 13.7 Services

Schedule 1 Definitions

Schedule 2 Referenced documents

10 Health and amenity

Part 10.4 Facilities

Insert TAS 10.4.3 as follows:

TAS 10.4.3 Installation of closet fixtures

[2019: TAS 3.8.3.4]

(1) If a sufficient sewerage system is not available, an authorised alternative means of disposal of sewage may be installed.

(2) If sanitary facilities are not water-flushed, the following provisions apply:

(a) A pit latrine, an incinerating toilet, a chemical toilet, a removable pan or a non-flushing urinal must not be within 2 m of a building containing *habitable rooms*.

(b) The floor on which a removable pan is placed must be impervious.

(c) A room containing a composting toilet must be separated from *habitable rooms* by way of a permanently ventilated air lock (which may be a circulation space).

(d) The minimum ventilation *required* under (c) shall be the greater of—

(i) 8000 mm^2; or

(ii) 1/500th of the *floor area* of the circulation space.

(e) Access for maintenance or removal of waste from a composting toilet must be by way of an access door which opens directly to the outside of the building.

13 Energy efficiency

TAS Part 13.1 Scope and application of Section 13

In Tasmania, Section 13 is replaced with BCA 2019 Part 3.12.

TAS Part 13.2 Building fabric

In Tasmania, Section 13 is replaced with BCA 2019 Part 3.12.

TAS Part 13.3 External glazing

In Tasmania, Section 13 is replaced with BCA 2019 Part 3.12.

TAS Part 13.4 Building sealing

In Tasmania, Section 13 is replaced with BCA 2019 Part 3.12.

TAS Part 13.5 Ceiling fans

In Tasmania, Section 13 is replaced with BCA 2019 Part 3.12.

TAS Part 13.6 Whole-of-home energy usage

In Tasmania, Section 13 is replaced with BCA 2019 Part 3.12.

TAS Part 13.7 Services

In Tasmania, Section 13 is replaced with BCA 2019 Part 3.12.

Schedule 1 Definitions

Centre-based care class 4 facility: A facility as defined in Centre Based Care Class 4 Standards.

Centre-based care class 5 facility: A facility as defined in Centre Based Care Class 5 Standards.

Early childhood centre

Any premises or part thereof providing or intending to provide a centre-based education and care service within the meaning of the Education and Care Services National Law Act 2010 (Vic), the Education and Care Services National Regulations and centre-based services that are licensed or approved under State and Territory children's services law, but excludes—

(a) education and care primarily provided to school aged children in outside school hours settings; and

(b) services licensed as *centre-based care class 4* under the Child Care Act 2001.

Expert judgement

For Volume Three, the judgement of a person who has the qualifications and expertise to determine whether a *Plumbing or Drainage Solution* complies with the *Performance Requirements*.

Explanatory Information

The level of qualification and/or experience required to determine whether a *Plumbing or Drainage Solution* complies with the *Performance Requirements* may differ depending on the degree of complexity and the requirements of the Tasmanian Building Act. Practitioners should seek advice from the *Permit Authority*.

Permit Authority: A permit authority as defined in the Building Act 2016.

Public: Includes any person working in an enclosed public place.

School age care facility: Is a facility providing care for children (primarily) 5 years or older in an outside of school hours setting, either approved or licenced under Education and Care Services National Law (Application) Act 2011 or the Child Care Act 2001.

Temporary structure: Includes any–

(a) booth, tent or other temporary enclosure, whether or not part of the booth, tent or enclosure is permanent; or

(b) temporary seating structure; or

(c) other structure prescribed under the Building Act 2016.

Schedule 2 Referenced documents

Insert TAS Table 1 as follows:

TAS Table 1: Schedule of referenced documents

No.	Date	Title	Volume One	Volume Two	Housing Provisions
AS 1657	2018	Fixed platforms, walkways, stairways and ladders – Design, construction and installation	TAS I10D3	N/A	N/A
AS/NZS 1668 Part 1	2015	The use of ventilation and air-conditioning in buildings: Fire and smoke control in multi-compartment buildings	TAS I4D7	N/A	N/A
AS 1668 Part 2	2012	The use of ventilation and air-conditioning in buildings: Mechanical ventilation in buildings	TAS I4D7, TAS I16D5	N/A	N/A
AS/NZS 1680 Part 1	2006	Interior lighting: General principles and recommendations	TAS I4D8, TAS I7D2, TAS I7D3, TAS I16D4	N/A	N/A
AS/NZS1680 Part 2.1	2008	Interior lighting: Circulation spaces and other general areas	TAS I7D2, TAS I7D3, TAS I16D4	N/A	N/A
AS/NZS1680 Part 2.2	2008	Interior lighting: Office and screen based tasks	TAS I7D2, TAS I7D3, TAS I16D4	N/A	N/A
AS/NZS1680 Part 2.3	2008	Interior lighting: Education and training facilities	TAS I7D2, TAS I7D3, TAS I16D4	N/A	N/A
AS/NZS1680 Part 2.4	2017	Interior lighting: Industrial tasks and processes	TAS I4D8, TAS I7D2, TAS I7D3	N/A	N/A
AS/NZS1680 Part 2.5	2018	Interior lighting: Hospitals and medical tasks	TAS I7D2, TAS I7D3	N/A	N/A
AS 2658	2008	LP Gas – Portable and mobile appliances	TAS I16D7	N/A	N/A
AS 2746	2008	Working areas for gas fuelled vehicles	TAS I17D2	N/A	N/A

No.	Date	Title	Volume One	Volume Two	Housing Provisions
AS/NZS 3000	2018	Electrical installations (known as the Australian/New Zealand Wiring Rules)	TAS I16D6	N/A	N/A
AS 4464	2007	Hygienic production of game meat for human consumption	TAS I6D2	N/A	N/A
AS 4465	2006	Construction of premises and hygienic production of poultry meat for human consumption	TAS I6D2	N/A	N/A
AS 4466	1998	Hygienic production of rabbit meat for human consumption	TAS I6D2	N/A	N/A
AS 4674	2004	Design, construction and fit-out of food premises (Clauses 4.2 and 4.3)	TAS I4D9, TAS I4D13	N/A	N/A
AS 4696	2007	Hygienic production and transportation of meat and meat products for human consumption	TAS I6D2	N/A	N/A
AS 5008	2007	Hygienic rendering of animal products	TAS I6D2	N/A	N/A
AS 5010	2001	Hygienic production of ratite (emu/ostrich) meat for human consumption	TAS I6D2	N/A	N/A
AS 5011	2001	Hygienic production of natural casings for human consumption	TAS I6D2	N/A	N/A
ABCB	—	Temporary Structures Standard	TAS I16D2	N/A	N/A

No.	Date	Title	Volume One	Volume Two	Housing Provisions
Australasian Health Facility Guidelines	—	N/A	TAS I9D2	N/A	N/A
BCA 2019 Amendment 1	2019	Building Code of Australia	TAS Section J	TAS Part H6	TAS Section 13
Centre Based Care Class 4 Standards	N/A	Tasmanian Licencing Standards for Centre Based Child Care Class 4	TAS Schedule 1	TAS Schedule 1	TAS Schedule 1
Centre Based Care Class 5 Standards	N/A	Tasmanian Licencing Standards for Centre Based Child Care Class 5 (0-12 years)	TAS Schedule 1	TAS Schedule 1	TAS Schedule 1
Child Care Act	2001	N/A	TAS I16P1, TAS I16P2, TAS I16P3, TAS I16D1, TAS Schedule 1	TAS Schedule 1	TAS Schedule 1
Condensation in Buildings Tasmanian Designers Guide	—	N/A	TAS F8P1	TAS H4D9	N/A
Dairy Industry Act	1994	N/A	TAS I4P1, TAS I4D1, TAS I7D1	N/A	N/A
Disability (Access to Premises – Buildings) Standards	2010	N/A	TAS D4D14	N/A	N/A
Disability Discrimination Act (Cth)	1992	N/A	TAS D1P10	N/A	N/A
Early Childhood Centre and School Age Care Facilities Code	N/A	N/A	TAS I5D2	N/A	N/A
Education and Care Services National Law (Application) Act	2011	N/A	TAS I16P1, TAS I16P2, TAS I16P3,TAS I16D1, TAS Schedule 1	TAS Schedule 1	N/A
Export Control (Milk and Diary) Orders	N/A	N/A	TAS I4D17	N/A	N/A
Health Service Establishments Act	2006	N/A	TAS I9D1	N/A	N/A
Hygienic Production of Pet Meat	N/A	Technical Report 88	TAS I6D2	N/A	N/A

No.	Date	Title	Volume One	Volume Two	Housing Provisions
Liquor Licensing Act	1990	N/A	TAS I4P1, TAS I4D1, TAS I5D1	N/A	N/A
Primary Produce Safety Act	2011	N/A	TAS I4P1, TAS I4D1, TAS I4D16	N/A	N/A
Water and Sewerage Industry Act	2008	N/A	TAS I4D3	N/A	N/A

Table Notes

(1) All legislation referenced in this Schedule is Tasmanian State Legislation unless noted otherwise.

(2) All referenced documents including legislation, codes, Australian Standards, guidelines and codes of practice are the version at the time of the project documentation approval, unless noted otherwise.

Schedule 10 Victoria

Schedule 1 **Definitions**
Schedule 2 **Referenced documents**

Schedule 1 Definitions

Children's service: Has the same meaning as it has under the Children's Services Act 1996, but excludes a service where education and care is primarily provided to school aged children.

Combustible cladding product: Means—

(a) aluminium composite panels (ACPs) with a core of less than 93 per cent inert mineral filler (inert content) by mass in external cladding as part of a wall system; and

(b) expanded polystyrene (EPS) products used in an external insulation and finish (rendered) wall system.

Early childhood centre

Includes—

(a) any premises, or part thereof, providing or intending to provide a centre-based education and care service within the meaning of the Education and Care Services National Law Act 2010, and the Education and Care Services National Regulations, excluding a service where education and care is primarily provided to school aged children; and

(b) a *children's service*.

Flashing

A strip or sleeve of impervious material dressed, fitted or built-in to provide a barrier to water movement, or to divert the travel of water, or to cover a joint where water would otherwise penetrate to the interior of a building, and includes the following:

(a) Perimeter flashing: a flashing used at the floor-wall junction.

(b) Vertical flashing: a flashing used at wall junctions within *shower areas*.

(c) Roof flashing: a rigid or flexible material, usually metal, fixed over, against or built into an abutment to form a weathertight joint.

Flood hazard area

The *site* (whether or not mapped) encompassing land in an area liable to flooding within the meaning of Regulation 153 of the Building Regulations 2018.

Freeboard

The minimum height of the lowest floor of the building above the *defined flood level*, regulated by the relevant planning scheme, or specified or otherwise determined by the relevant council under Regulation 153 of the Building Regulations 2018 (see Figure 3).

Hotel offering shared accommodation: A hotel which has any *sole-occupancy units* that can be shared by unrelated persons.

On-site wastewater management system

A system that receives and/or treats wastewater generated and discharges the resulting effluent to—

(a) an *approved disposal system*; or

(b) re-use system; or

(c) land application system.

Plumbing

Any water service plumbing, roof plumbing, sanitary plumbing system or heating, ventilation and air-conditioning plumbing.

Residential care building (Vic): A building which is a place of residence where 10% or more of persons who reside there need physical assistance in conducting their daily activities and to evacuate the building during an emergency (including any residential care service, State funded residential care service or supported residential service as defined in the Supported Residential Services (Private Proprietors) Act 2010 and an *aged care building*) but does not include—

(a) a hospital; or

(b) a dwelling in which 2 or more members of the same family and not more than 2 other persons would ordinarily be resident; or

(c) a place of residence where only one resident needs physical assistance in conducting their daily activities and

to evacuate the building during an emergency.

Restricted children's service: A *children's service* that is—

(a) any one of the following as defined in the Children's Services Regulations 2020—

(i) a limited hours Type 1 service; or

(ii) a limited hours Type 2 service; or

(iii) a short term Type 1 service; or

(iv) a short term Type 2 service; or

(b) an associated children's service within the meaning of the Children's Services Act 1996 approved to be operated by an approved provider at the same place as an approved education and care service that is required to meet the conditions of a limited hours Type 1 service, a limited hours Type 2 service, a short term Type 1 service, or a short term Type 2 service.

Shared accommodation building: A Class 3 building that is a boarding-house, chalet, guest house, lodging-house, backpacker accommodation or the like, or a residential part of a *hotel offering shared accommodation* (but is not a *residential care building (Vic)*, a motel or a residential part of *school*, *health-care building* or detention centre) having—

(a) more than one *sole-occupancy unit* of which any *sole-occupancy unit* has sleeping facilities capable of accommodating 3 or more unrelated persons; or

(b) sleeping facilities capable of accommodating 13 or more unrelated persons.

Schedule 2 Referenced documents

Insert VIC Table 1 as follows:

VIC Table 1: Schedule of referenced documents

No.	Date	Title	Volume One	Volume Two	Housing Provisions	Volume Three
AS/NZS ISO 817	2016	Refrigerants - Designation and safety classification	N/A	N/A	N/A	VIC E2D2
AS/NZS 1200	2015	Pressure Equipment	N/A	N/A	N/A	VIC E2D2
AS 1271	2003	Safety valves, other valves, liquid level gauges and other fittings for boilers and unfired pressure vessels	N/A	N/A	N/A	VIC E2D2
AS 1324.1	2001	Air filters for use in general ventilation and air conditioning	N/A	N/A	N/A	VIC E2D2
AS 1345	1995	Identification of the contents of pipes, conduits and ducts	N/A	N/A	N/A	VIC E2D2
AS 1358	2004	Bursting discs and bursting disc devices - Application, selection and installation	N/A	N/A	N/A	VIC E2D2
AS 1428.1	2009	Design for access and mobility, Part 1: General requirements for access – New building work (incorporating amendments 1 and 2)	VIC I4D5	N/A	N/A	N/A
AS/NZS 1571	2020	Copper - seamless tubes for air conditioning and refrigeration	N/A	N/A	N/A	VIC E2D2
AS/NZS 1530.3	1999	Methods for fire tests on building materials, components and structures	N/A	N/A	N/A	VIC B4D2
AS/NZS 1668.1	2015	The use of ventilation and air conditioning in buildings: Fire and smoke control in buildings	N/A	N/A	N/A	VIC E2D2

No.	Date	Title	Volume One	Volume Two	Housing Provisions	Volume Three
AS 1668.2	2012	The use of ventilation and air conditioning in buildings: Mechanical ventilation in buildings	N/A	N/A	N/A	VIC E2D2
AS 1851	2012	Routine service of fire protection systems and equipment	N/A	N/A	N/A	VIC B4D2
AS 1926.1	2012	Swimming pool safety, Part 1: Safety barriers for swimming pools	VIC G1D2	N/A	N/A	N/A
AS 1926.2	2007	Swimming pool safety, Part 2: Location of safety barriers for swimming pools (incorporating amendments 1 and 2)	VIC G1D2	N/A	N/A	N/A
AS 2118.1	2017	Automatic fire sprinkler systems, Part 1: General systems (incorporating amendment 1)	VIC S17C2, VIC S18C3	N/A	N/A	VIC B1D5, VIC B4D2
AS 2118.2	2021	Automatic fire sprinkler systems: Wall wetting sprinkler systems	N/A	N/A	N/A	VIC B4D2
AS 2118.3	2010	Automatic fire sprinkler systems: Deluge systems	N/A	N/A	N/A	VIC B4D2
AS 2118.4	2012	Automatic fire sprinkler systems, Part 4: Sprinkler protection for accommodation buildings not exceeding four storeys in height	VIC S17C2, VIC S18C3	N/A	N/A	VIC B1D5, VIC B4D2
AS 2118.5	2008	Automatic fire sprinkler systems	N/A	N/A	N/A	VIC B1D5, VIC B4D2
AS 2118.6	2012	Automatic fire sprinkler systems, Part 6: Combined sprinkler and hydrant systems in multistorey buildings	VIC S17C2	N/A	N/A	N/A
AS2118.8	1997	Automatic fire sprinkler systems: Minor modifications	N/A	N/A	N/A	VIC B4D2

No.	Date	Title	Volume One	Volume Two	Housing Provisions	Volume Three
AS 2118.10	1995	Automatic fire sprinkler systems: Approval documentation	N/A	N/A	N/A	VIC B4D2
AS 2473.3	2007	Valves for compressed gas cylinders	N/A	N/A	N/A	VIC E2D2
AS 2568	2019	Purity of medical air produced from on-site compressor systems	N/A	N/A	N/A	VIC E2D2
AS 2896	2021	Medical gas systems - Installation and testing of non-flammable medical gas pipeline systems	N/A	N/A	N/A	VIC E2D2
AS 2902	2005	Medical gas systems - Low pressure flexible hose assemblies	N/A	N/A	N/A	VIC E2D2
AS/NZS 2918	2018	Domestic solid fuel burning appliances - Installation	N/A	N/A	N/A	VIC E2D2
AS 2941	2013	Fixed fire protection installations - Pumpset systems	N/A	N/A	N/A	VIC B4D2
AS/NZS 3500.1	2021	Plumbing and drainage: Water services	N/A	N/A	N/A	VIC B1D3, VIC B1D5, VIC B3D3, VIC B4D2, VIC B6D2, VIC B7D3, VIC B7D4, VIC E2D2
AS/NZS 3500.2	2021	Plumbing and drainage: Sanitary plumbing and drainage	N/A	N/A	N/A	VIC C1D3, VIC C2D4, VIC C4P1, VIC E2D2
AS/NZS 3500.3	2021	Plumbing and drainage: Stormwater drainage	N/A	N/A	N/A	VIC C5D2, VIC C6D2
AS/NZS 3500.4	2021	Plumbing and drainage: Heated water services	N/A	N/A	N/A	VIC E2D2, VIC B2D6
AS/NZS 3666.1	2011	Air handling and water systems of buildings - Microbial control: Design, installation and commissioning	N/A	N/A	N/A	VIC E2D2

No.	Date	Title	Volume One	Volume Two	Housing Provisions	Volume Three
AS/NZS 3666.2	2011	Air handling and water systems of buildings - Microbial control: Operation and maintenance	N/A	N/A	N/A	VIC E2D2
AS 4032.3	2022	Water supply - Valves for the control of heated water supply temperatures	N/A	N/A	N/A	VIC B2D6
AS 4041	2006	Pressure piping	N/A	N/A	N/A	VIC E2D2
AS 4118.1.1	1996	Fire sprinkler systems: Components - Sprinklers and sprayers	N/A	N/A	N/A	VIC B4D2
AS 4118.1.2	1996	Fire sprinkler systems: Components - Alarm valves (wet)	N/A	N/A	N/A	VIC B4D2
AS 4118.1.3	1995	Fire sprinkler systems: Components - Water motor alarms	N/A	N/A	N/A	VIC B4D2
AS 4118.1.4	1994	Fire sprinkler systems: Components - Valve monitors	N/A	N/A	N/A	VIC B4D2
AS 4118.1.5	1996	Fire sprinkler systems: Components - Deluge and pre-action valves	N/A	N/A	N/A	VIC B4D2
AS 4118.1.6	1995	Fire sprinkler systems: Components - Stop valves and non-return valves	N/A	N/A	N/A	VIC B4D2
AS 4118.1.7	1996	Fire sprinkler systems: Components - Alarm valves (dry)	N/A	N/A	N/A	VIC B4D2
AS 4118.1.8	1999	Fire sprinkler systems: Components - Pressure reducing valves	N/A	N/A	N/A	VIC B4D2
AS 4254.1	2021	Ductwork for air-handling systems in buildings: Flexible duct	N/A	N/A	N/A	VIC E2D2
AS 4254.2	2012	Ductwork for air-handling systems in buildings: Rigid duct	N/A	N/A	N/A	VIC E2D2

No.	Date	Title	Volume One	Volume Two	Housing Provisions	Volume Three
AS 4426	1997	Thermal insulation of pipework, ductwork and equipment - Selection, installation and finish	N/A	N/A	N/A	VIC E2D2
AS 4508	1999	Thermal resistance of insulation for ductwork used in building air-conditioning	N/A	N/A	N/A	VIC E2D2
AS/NZS 4859.1	2018	Thermal insulation materials for buildings: General criteria and technical provisions	N/A	N/A	N/A	VIC E2D2
AS/NZS 5141	2018	Residential heating and cooling systems - Minimum applications and requirements for energy efficiency, performance and comfort criteria	N/A	N/A	N/A	VIC E2D2
AS/NZS 5149.1	2016	Refrigerating systems and heat pumps - Safety and environmental requirements: Definitions, classification and selection criteria	N/A	N/A	N/A	VIC E2D2
AS/NZS 5149.2	2016	Refrigerating systems and heat pumps - Safety and environmental requirements: Design, construction, testing, marking and documentation	N/A	N/A	N/A	VIC E2D2
AS/NZS 5149.3	2016	Refrigerating systems and heat pumps - Safety and environmental requirements: Installation site	N/A	N/A	N/A	VIC E2D2
AS/NZS 5149.4	2016	Refrigerating systems and heat pumps - Safety and environmental requirements: Operation, maintenance, repair and recovery	N/A	N/A	N/A	VIC E2D2
AS/NZS 5601.1	2022	Gas installations: General installations	N/A	N/A	N/A	VIC E2D2

No.	Date	Title	Volume One	Volume Two	Housing Provisions	Volume Three
ABCB Standard for Construction of Buildings in Flood Hazard Areas, Version 2012.3	2012	Standard for Construction of Buildings in Flood Hazard Areas	VIC B1D6	N/A	N/A	
—	2022	Motorsport Australia Track Operators Guide For Motorsport Race Venues – version 1	VIC I5D4	N/A	N/A	
FPAA101D	2018	Automatic Fire Sprinkler System Design and Installation— Drinking Water Supply	VIC S17C2, VIC S18C3	N/A	N/A	B1D5
FPAA101H	2018	Automatic Sprinkler System Design— Hydrant Water Supply	VIC S17C2, VIC S18C3	N/A	N/A	B4D3
Building Practice Note FS-01	—	Victorian Building Authority Practice Note FS-01	VIC S20C8	N/A	N/A	
SA HB 39	2015	Metal roof and wall cladding installation	N/A	N/A	N/A	VIC E3D2
HB 276	2004	A guide to good practice for energy efficient installation of residential heating, cooling and air conditioning plant and equipment	N/A	N/A	N/A	VIC E2D2
N/A	2007	Australian and New Zealand refrigerant handling code of practice 2007 Part 1 - Self-contained low charge systems	N/A	N/A	N/A	VIC E2D2
N/A	2007	Australian and New Zealand refrigerant handling code of practice 2007 Part 2 - Systems other than Self-contained low charge systems	N/A	N/A	N/A	VIC E2D2
N/A	1993	The Building Act 1993 (Victoria)	N/A	N/A	N/A	B6D2
N/A	2018	Plumbing Regulations	N/A	VIC H6V1	N/A	B2P7

Schedule 11 Western Australia

Introduction

2 Structure

Part 2.2 Structural provisions

WA 2.2.3 Determination of individual actions

WA 2.2.4 Determination of structural resistance of materials and forms of construction

WA Part 2.3 Changes to AS/NZS 1170.2:2021 and AS 4055:2021

WA 2.3.1 Scope

WA 2.3.2 Regional wind speeds

WA 2.3.3 Internal pressure

WA 2.3.4 Openings

WA 2.3.5 Site wind classification

Schedule 1 Definitions

Schedule 2 Referenced documents

WA Introduction

This Appendix contains variations to the ABCB Housing Provisions Standard which are considered necessary for the effective application of the Standard in Western Australia.

In Western Australia state variations apply to wind Regions B and D.

2 Structure

Part 2.2 Structural provisions

Delete 2.2.3 and insert WA 2.2.3 as follows:

WA 2.2.3 Determination of individual actions

[2019: 3.0.3]

The magnitude of individual actions must be determined in accordance with the following:

(a) Permanent actions:

(i) the design or known dimensions of the building or structure; and

(ii) the unit weight of the construction; and

(iii) AS/NZS 1170.1.

(b) Imposed actions:

(i) the known loads that will be imposed during the occupation or use of the building or structure; and

(ii) *construction activity actions*; and

(iii) AS/NZS 1170.1.

(c) Wind, snow and earthquake actions:

(i) the applicable annual probability of design event for safety, determined by—

(A) assigning the building or structure an Importance Level in accordance with Table 2.2.3a; and

(B) determining the corresponding annual probability of exceedance for safety in accordance with WA Table 2.2.3b; and

(ii) for wind actions, AS/NZS 1170.2 or AS 4055, except where varied by WA Part 2.3; and

(iii) for snow and ice actions, AS/NZS 1170.3; and

(iv) for earthquake actions, AS 1170.4.

(d) Actions not covered in (a), (b) and (c) above:

(i) the nature of the action; and

(ii) the nature of the building or structure; and

(iii) the Importance Level of the building or structure determined in accordance with Table 2.2.3a; and

(iv) AS/NZS 1170.1.

(e) For the purposes of (d) the actions include but are not limited to—

(i) liquid pressure action; and

(ii) ground water action; and

(iii) rainwater action (including ponding action); and

(iv) earth pressure action; and

(v) differential movement; and

(vi) time dependent effects (including creep and shrinkage); and

(vii) thermal effects; and

(viii) ground movement caused by—

(A) swelling, shrinkage or freezing of the subsoil; and

(B) landslip or subsidence; and

(C) siteworks associated with the building or structure; and

(ix) *construction activity actions*.

Insert Table 2.2.3a as follows:

Table 2.2.3a: Importance Levels of buildings and structures

Importance Level	Building types
1	Buildings or structures presenting a low degree of hazard to life and *other property* in the case of failure.
2	Buildings or structures not included in Importance Level 1.

Insert WA Table 2.2.3b as follows:

WA Table 2.2.3b: Design events for safety – annual probability of exceedance

Importance Level	Non- cyclonic wind	Cyclonic wind other than wind Region D north of the Tropic of Capricorn	Cyclonic wind in wind Region D north of the Tropic of Capricorn	Snow	Earthquake
1	1:100	1:200	1:250	1:100	1:250
2	1:500	1:500	1:1000	1:150	1:500

Insert Figure 2.2.3 as follows:

Figure 2.2.3: Wind regions

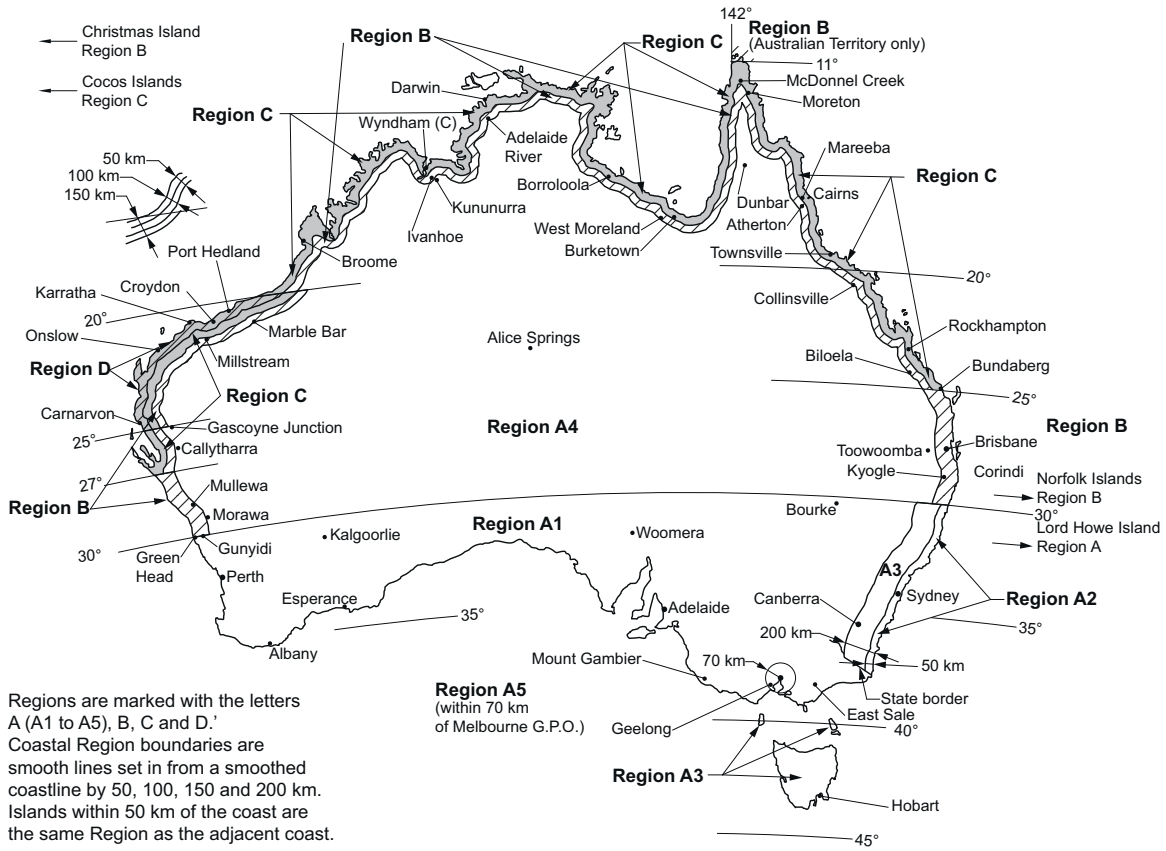

Explanatory Information: Permanent and imposed actions

Permanent actions include the dead loads of the building or structure. These include the load imposed by the building's components inclusive of the forces imposed by the floors, walls, roofs, suspended ceilings, etc.

Imposed actions include live loads on the building or structure. These include the load arising from construction activity and the intended use or function of the building or structure.

Explanatory Information: Application of AS 1170.4

There are certain limitations on the application to domestic structures such as Class 1a and Class 1b buildings in Appendix A of AS 1170.4. These limitations include building height, roof slope, etc. For additional information refer to Appendix A of AS 1170.4.

Explanatory Information: Importance Levels (Table 2.2.3a)

Table 2.2.3a provides a generic description of building types to which Importance Levels have been assigned. The "Importance Level" concept is applicable to building structural safety only. More specific examples are provided in the following list. The examples are indicative and not exhaustive.

- Importance Level 1: Isolated minor Class 10a buildings and Class 10b structures.
- Importance Level 2: Class 1 buildings; Class 10a buildings and Class 10b structures associated with Class 1 buildings.

Importance Levels must be assigned on a case by case basis and relate to the hazards to human life and *other property* in the event of the structure's failure. For example—

(a) Importance Level 1 is for minor isolated structures that rarely contain people, are not required as part of normal infrastructure and present a low risk to life and *other property*.

(b) Importance Level includes domestic housing and structures intended to contain reasonable numbers of people under normal operations.

Explanatory Information: Construction in cyclonic areas

The intent of building construction in cyclonic areas (see Figure 2.2.3) is to ensure the structure has sufficient strength to transfer wind forces to the ground with an adequate safety margin to prevent collapse of the building and the building being lifted, or slid off its foundations.

To resist these forces it is necessary to have—

- an anchorage system, where the roof is connected by the walls to the footings by a chain of connections; and
- a bracing system to prevent horizontal collapse due to wind forces; and
- continuity of the system where each structural element is interlocked to its adjoining structural element throughout the building.

Explanatory Information: Anchorage

Anchorage of the system is achieved by using a variety of connectors. Each connector must be capable of carrying the uplift force, because the ability of the building to resist the wind forces is directly related to its weakest link.

Explanatory Information

In Western Australia state variations apply to wind regions B and D, this includes wind region B2 as referenced in AS/NZS 1170.2.

The state variation for wind region B or B2 will ensure that designers consider the combination of peak external pressures and increased internal pressures in design of buildings and use a cyclonic (C) classification instead of non-cyclonic (N) classification. The definition of *design wind speed* is varied in WA Schedule 1 to identify that wind Region B is a C classification in Western Australia. Other changes have also been made to reflect this.

In addition to a variation to clause H1D7 of NCC Volume Two, and clauses 2.2.3 and 2.2.4 of the ABCB Housing Provisions Standard - a variation is made to the application of AS/NZS 1170.2 and AS 4055 (when used as a primary referenced document, secondary or subsequent referenced document). Refer to WA Schedule 2 and WA Part 2.3.

The state variation for wind region D applies only to those parts of region D located north of the Tropic of Capricorn. The 2021 edition of AS/NZS 1170.2 includes a reduction in design wind speeds for wind region D. The variation will retain similar design wind speeds for wind region D as the 2011 edition of AS/NZS 1170.2 previously referenced in the National Construction Code.

Delete 2.2.4 and insert WA 2.2.4 as follows:

WA 2.2.4 Determination of structural resistance of materials and forms of construction

[2019: 3.0.4]

The following requirements, or any combination of them, must be used to determine the structural resistance of materials and forms of construction as appropriate:

(a) Earthworks: H1D3(1).

(b) Earth retaining structures: H1D3(2).

(c) Termite risk management: H1D3(3).

(d) Concrete construction (including slabs and footings, piled footings and reinforced and prestressed concrete structures): H1D4.

(e) Piled footings: H1D12.

(f) Post-installed and cast-in fastenings in concrete: AS 5216.

(g) Masonry (including masonry veneer, *unreinforced masonry* and *reinforced masonry*): H1D5.

(h) Steel construction (including steel framing and structural steel members): H1D6.

(i) Timber construction (including design of timber structures, timber framing and design of nail-plated timber roof trusses): H1D6.

(j) Composite steel and concrete: AS/NZS 2327.

(k) Aluminium construction:

  (i) AS/NZS 1664.1.

  (ii) AS/NZS 1664.2.

(l) Roof construction (including plastic sheeting, roofing tiles, metal roofing and terracotta, fibre-cement and timber slates and shingles): H1D7.

(m) Wall cladding: H1D7.

(n) Glazed assemblies: H1D8.

(o) Barriers and handrails (including stairway and ramp construction):

  (i) H5D3; and

  (ii) AS/NZS 1170.1 for the determination of loading forces on a barrier.

(p) Attachment of decks and balconies to *external walls* of buildings: H1D11.

(q) Garage doors and other large access doors in openings not more than 3 m in height in *external walls* of buildings determined as being located in wind region B, C or D in accordance with Figure 2.2.3: AS/NZS 4505.

(r) For *high wind areas*: requirements listed in (a) to (q) as appropriate or the Northern Territory Deemed to Comply Standards Manual.

Explanatory Information

The weight of roof or ceiling insulation, particularly if additional ceiling insulation is used for compliance with the energy efficiency provisions, needs to be considered in the selection of plasterboard, plasterboard fixings and building framing.

WA Part 2.3 Changes to AS/NZS 1170.2:2021 and AS 4055:2021

WA 2.3.1 Scope

[New for 2022]

This Part sets out the changes necessary for Western Australia to the application of AS/NZS 1170.2:2021 for wind Region B2 and AS 4055:2021 for site wind classification.

WA 2.3.2 Regional wind speeds

[New for 2022]

Delete Table 3.1(A) of AS/NZS 1170.2:2021 and replace with WA Table 2.3.2.

Insert WA Table 2.3.2 as follows:

WA Table 2.3.2: Table 3.1(A)—Regional wind speeds—Australia

Regional wind speed (m/s)	Region				
	Non-cyclonic		Cyclonic		
	A (0 to 5)	B1	B2	C (maximum)	D (maximum)
V_1	30	26		23	23
V_5	32	28		33	35
V_{10}	34	33		39	43
V_{20}	37	38		45	51
V_{25}	37	39		47	53
V_{50}	39	44		52	60
V_{100}	41	48		56	66
V_{200}	43	52		61	72
V_{250}	43	53		62	74
V_{500}	45	57		66	80
V_{1000}	46	60		70	5
V_{2000}	48	63		73	90
V_{2500}	48	64		74	91
V_{5000}	50	67		78	95
V_{10000}	51	69		81	99
V_R ($R \geq 5$ years)	$67-41R^{-0.1}$	$106-92R^{-0.1}$		$122-104R^{-0.1}$	$156-142R^{-0.1}$

Table Notes

(1) The peak gust has an equivalent moving average time of approximately 0.2 s (Holmes and Ginger, 2012).

(2) Values for V_1 have not been calculated by the formular for V_R in the Australian regions.

(3) For ultimate or serviceability limit states, refer to the National Construction Code (Australia) or AS/NZS 1170.0 for information on values of importance level and annual probability of exceedance appropriate for the design of structures. For buildings in townships in cyclonic regions, users should consider overall risk to a community when selecting importance levels.

(4) For Regions C and D, only the maximum values for the region are tabulated. Lower values of V_R may apply in those regions, depending on the distance of the site from the smooth coastline.

WA 2.3.3 Internal pressure

[New for 2022]

Delete 5.3.1 of AS/NZS 1170.2:2021 and replace with the following:

5.3.1 Internal pressure

5.3.1.1 General

Internal pressure is a function of the external pressures, and the leakage and openings in the external surfaces of the building or an isolated part of a larger building, and for some large buildings, the internal volume. The open area of a surface shall be calculated by adding areas of opening to areas of permeability or leakage on that surface of the building (e.g. vents and gaps in the building envelope).

The height at which the design wind speed is determined for calculation of internal pressures shall be the average roof height (h), as defined in Figure 2.1. However, for the cases of windward wall leakage or openings on a building greater than 25 m in height, the design wind speed at the height of the opening shall be used.

Pressure coefficients for internal pressure (Cp,i) shall be determined by either Clause 5.3.1.2 or 5.3.1.3.

NOTE 1 Damage inspections after wind storms, in Regions B2, C and D, have shown that large openings are very likely to occur accidentally due to failure of elements under direct wind pressure, or in the lower levels of a building envelope, by debris impact. Large openings can also occur in Regions A (0 to 5), B1 and NZ (1 to 4) under the same circumstances, although openings produced by debris impact are less likely.

NOTE 2 The equivalent free area of a ventilator (e.g. ridge or under-eave ventilators) can be determined from the product of discharge coefficient and throat area.

5.3.1.2 Internal pressure coefficients for all cases, except ultimate limit states for parts of buildings below 25 m in Regions B2, C and D

Clause 5.3.1.1 applies to buildings in all regions for serviceability limit states.

For ultimate limit states, it applies to all buildings in Regions A (0 to 5), B1 and NZ (1 to 4), and parts of buildings higher than 25 m above ground level in Regions B2, C and D.

Pressure coefficients for internal pressure (Cp,i) shall be determined from Tables 5.1(A) or 5.1(B). Table 5.1(A) shall be used for the design case where there are no potential openings in any surface with a combined area greater than 0.5 % of the total area of that surface, and the leakage in the walls lead to internal pressures. Table 5.1(B) shall be used for the design case where there are openings in any surface greater than 0.5 % of the total area of that surface, or they can be created accidentally.

5.3.1.3 Internal pressure coefficients for ultimate limit states for parts of buildings below 25 m in Regions B2, C and D

Pressure coefficients for internal pressure (Cp,i) for parts of a building in Regions B2, C and D below 25 m for ultimate limit states, shall be determined from Table 5.1(B) only.

The ratio of the sum of opening areas on one surface to total open area of other walls and roof surfaces as defined in Table 5.1(B) shall not be taken to be less than two unless —

(a) it can be demonstrated that an opening will not be created in the building envelope as a result of impact loading from the windborne debris defined in Clause 2.5.8; or

(b) a permanently-open roof ventilator, such as a ridge ventilator, has been installed with equivalent total area (see Clause 5.3.1.1 Note 2) of at least that of the largest areas of any potential accidental openings in the walls, considering the combined area of wall openings in each wall surface one at a time; or

(c) permanently-open, wall ventilators have been installed on at least two walls, with equivalent total area (see Clause 5.3.1.1 Note 2) of the ventilators on each wall at least that of the largest of any potential accidental openings in the walls, considering the combined area of wall openings in each wall surface one at a time.

NOTE 1 Low-rise buildings in Regions B2, C and D should be designed for the high internal pressures resulting from large openings, for ultimate limit states. Even in cases where the opening is small or there is no opening, Table 5.1(A) is not intended to be used for low-rise buildings in Regions B2, C and D for ultimate limit states.

NOTE 2 To date, the majority of windborne debris in Regions B2, C and D in Australia has not often impacted at heights on buildings above 25 m. This is not the case in other parts of the world and could change in the future with increasing numbers of high-rise buildings.

WA 2.3.4 Openings

[New for 2022]

Delete 5.3.2 of AS/NZS 1170.2:2021 and replace with the following:

5.3.2 Openings

5.3.2.1 General

Openings shall be determined according to either Clause 5.3.2.2 (Regions A (0 to 5), B1 and NZ (1 to 4), and Regions B2, C, D at heights of 25 m or above) or Clause 5.3.2.3 (Regions B2, C, D below 25 m).

Subject to Clauses 5.3.2.2 and 5.3.2.3, combinations of openings and open area shall be assumed to give internal pressures, which, together with external pressures, give the most adverse wind actions.

NOTE Potential openings include doors or windows that are left open or may fail, vents that are normally open and holes in cladding caused by impacts by windborne debris during a major wind event. Openings can be doors (including balcony doors) or windows that are left open, open under pressure, or open due to the failure of latches or hinges. When determining internal pressures, consideration should be given to scenarios in which large openings may develop. Openings may also be generated by debris impacts, particularly in Regions B2, C and D (see Clause 2.5.8).

5.3.2.2 Openings in buildings in Regions A (0 to 5), B1 and NZ (1 to 4), and parts of buildings at heights of 25 m or above in Regions B2, C and D

The full area of doors, including large access doors (e.g. roller doors), and windows that are normally closed, shall be regarded as openings, unless they are demonstrated to be capable of resisting the applied wind pressures.

NOTE 1 When assessing internal pressures, designers should consider the principles of robustness, i.e. to avoid situations where the failure of a single component such as a door or window could lead to consequent and disproportionate failure of other elements, or even complete failure of the structure.

NOTE 2 The structural assessment of doors that are assumed to remain closed and intact should include elements such as supports, frames, jambs, roller door guides, wind locks, latches and hinges, and fixings, where the resistance of doors relies on those. This assessment of roller doors and their supporting structural elements should also account for any structural resistance to any catenary actions developed by the door under wind load.

5.3.2.3 Openings in buildings for ultimate limit states for parts of buildings below 25 m in Regions B2, C and D

Doors (including large access doors) and windows that are normally closed, and cladding elements, shall be regarded as openings with an area equal to the greater of—

(a) the full area of the element, where it has not been demonstrated that it can resist the applied wind pressures; or

(b) the area of opening that results from debris impact, where the debris impact loading criteria are defined in Clause 2.5.8.

WA 2.3.5 Site wind classification

[New for 2022]

Delete reference to 'Table 2.2' in clause 2.2 of AS 4055:2021 and insert WA Table 2.3.5 for determining site wind classification.

Insert WA Table 2.3.5 as follows:

WA Table 2.3.5: Table 2.2—Site wind classification from site conditions

Wind Region	TC	Topographic classification												
		T0	T0	T0	T1	T1	T1	T2	T2	T2	T3	T3	T4	T5
		FS	PS	NS	FS	PS	NS	FS	PS	NS	PS	NS	NS	NS
A	**3**	N1	N1	N1	N1	N2	N2	N2	N2	N2	N3	N3	N3	N4
	2.5	N1	N1	N2	N1	N2	N2	N2	N3	N3	N3	N3	N4	N4
	2	N1	N2	N2	N2	N2	N3	N2	N3	N3	N3	N3	N4	N4
	1	N2	N2	N3	N2	N3	N3	N3	N3	N3	N4	N4	N4	N5
B	**3**	C1	C1	C1	C1	C1	C2	C1	C2	C2	C2	C2	C3	C3
	2.5	C1	C1	C1	C1	C2	C2	C2	C2	C2	C3	C3	C3	C4
	2	C1	C2	C2	C1	C2	C2	C2	C2	C3	C3	C3	C4	C4
	1	C1	C2	C2	C2	C2	C3	C2	C3	C3	C3	C4	C4	NA
C	**3**	C1 (0-50)	C2 (0-10)	C2 (0-20)	C2 (0-5)	C2 (0-30)	C2 (0-40)	C2 (0-25)	C3 (0-5)	C3 (0-20)	C3 (0-25)	C3 (0-30)	C4 (0-10)	C4 (0-35)
			C1 (10-50)	C1 (20-50)	C1 (5-50)	C1 (30-50)	C1 (40-50)	C1 (25-50)	C2 (5-50)	C2 (20-50)	C2 (25-50)	C2 (30-50)	C3 (10-50)	C3 (35-50)
	2.5	C1 (0-50)	C2 (0-25)	C2 (0-35)	C2 (0-20)	C2 (0-40)	C3 (0-10)	C2 (0-35)	C3 (0-20)	C3 (0-30)	C3 (0-35)	C4 (0-5)	C4 (0-25)	NA (0-15)
			C1 (25-50)	C1 (35-50)	C1 (20-50)	C1 (40-50)	C2 (10-50)	C1 (35-50)	C2 (20-50)	C2 (30-50)	C2 (35-50)	C3 (5-50)	C3 (25-50)	C4 (15-50)
	2	C2 (0-10)	C2 (0-35)	C2 (0-45)	C2 (0-30)	C3 (0-10)	C3 (0-25)	C3 (0-10)	C3 (0-30)	C3 (0-40)	C4 (0-10)	C4 (0-20)	NA (0-5)	NA (0-25)
		C1 (10-50)	C1 (35-50)	C1 (45-50)	C1 (30-50)	C2 (10-50)	C2 (25-50)	C2 (10-50)	C2 (30-50)	C2 (40-50)	C3 (10-50)	C3 (20-50)	C4 (5-50)	C4 (25-50)
	1	C2 (0-30)	C3 (0-10)	C3 (0-25)	C3 (0-10)	C3 (0-30)	C4 (0-5)	C3 (0-25)	C4 (0-10)	C4 (0-20)	C4 (0-30)	NA (0-5)	NA (0-25)	NA (0-45)
		C1 (30-50)	C2 (10-50)	C2 (25-50)	C2 (10-50)	C2 (30-50)	C3 (5-50)	C2 (25-50)	C3 (10-50)	C3 (20-50)	C3 (30-50)	C4 (5-50)	C4 (25-50)	C4 (45-50)
D – south of the Tropic of Capricorn	**3**	C2 (0-30)	C3 (0-10)	C3 (0-25)	C3 (0-5)	C3 (0-35)	C3 (0-50)	C3 (0-30)	C4 (0-5)	C4 (0-20)	C4 (0-30)	C4 (0-40)	NA (0-25)	NA (0-50)
		C1 (30-50)	C2 (10-50)	C2 (25-50)	C2 (5-50)	C2 (35-50)		C2 (30-50)	C3 (5-50)	C3 (20-50)	C3 (30-50)	C3 (40-50)	C4 (25-50)	
	2.5	C2 (0-50)	C3 (0-25)	C3 (0-40)	C3 (0-25)	C3 (0-50)	C4 (0-15)	C3 (0-45)	C4 (0-25)	C4 (0-40)	NA (0-5)	NA (0-20)	NA (0-40)	

Wind Region	TC	Topographic classification												
		T0	T0	T0	T1	T1	T1	T2	T2	T2	T3	T3	T4	T5
		FS	PS	NS	FS	PS	NS	FS	PS	NS	PS	NS	NS	NS
			C2 (25-50)	C2 (40-50)	C2 (25-50)		C3 (15-50)	C2 (45-50)	C3 (25-50)	C3 (40-50)	C4 (5-50)	C4 (20-50)	C4 (40-50)	
	2	C3 (0-10)	C3 (0-40)	C4 (0-5)	C3 (0-35)	C4 (0-15)	C4 (0-30)	C4 (0-10)	C4 (0-40)	NA (0-15)	NA (0-20)	NA (0-35)	NA (0-50)	
		C2 (10-50)	C2 (40-50)	C3 (5-50)	C2 (35-50)	C3 (15-50)	C3 (30-50)	C3 (10-50)	C3 (40-50)	C4 (15-50)	C4 (20-50)	C4 (35-50)		
	1	C3 (0-35)	C4 (0-15)	C4 (0-30)	C4 (0-10)	C4 (0-40)	NA (0-15)	C4 (0-35)	NA (0-25)	NA (0-40)	NA (0-45)	NA (0-50)	NA (0-50)	
		C2 (35-50)	C3 (15-50)	C3 (30-50)	C3 (10-50)	C3 (40-50)	C4 (15-50)	C3 (35-50)	C4 (25-50)	C4 (40-50)	C4 (45-50)			
D – north of the Tropic of Capricorn	**3**	C2 (0-35)	C3 (0-20)	C3 (0-30)	C3 (0-20)	C3 (0-40)	C4 (0-10)	C3 (0-35)	C4 (0-20)	C4 (0-30)	NA (0-5)	NA (0-15)	NA (0-35)	NA (0-50)
		C1 (35-50)	C2 (20-50)	C2 (30-50)	C2 (20-50)	C2 (40-50)	C3 (10-50)	C2 (35-50)	C3 (20-50)	C3 (30-50)	C4 (5-50)	C4 (15-50)	C4 (35-50)	NA (0-50)
	2.5	C3 (0-10)	C3 (0-35)	C4 (0-5)	C3 (0-30)	C4 (0-15)	C4 (0-25)	C4 (0-10)	C4 (0-30)	NA (0-10)	NA (0-20)	NA (0-30)	NA (0-45)	NA (0-50)
		C2 (10-50)	C2 (35-50)	C3 (5-50)	C2 (30-50)	C3 (15-50)	C3 (25-50)	C3 (10-50)	C3 (30-50)	C4 (10-50)	C4 (20-50)	C4 (30-50)	C4 (45-50)	NA (0-50)
	2	C3 (0-25)	C4 (0-5)	C4 (0-15)	C4 (0-5)	C4 (0-25)	NA (0-5)	C4 (0-20)	NA (0-15)	NA (0-25)	NA (0-30)	NA (0-40)	NA (0-50)	NA (0-50)
		C2 (25-50)	C3 (5-50)	C3 (15-50)	C3 (5-50)	C3 (25-50)	C4 (5-50)	C3 (20-50)	C4 (15-50)	C4 (25-50)	C4 (30-50)	C4 (40-50)	NA (0-50)	NA (0-50)
	1	C4 (0-5)	C4 (0-25)	NA (0-5)	C4 (0-25)	NA (0-15)	NA (0-25)	NA (0-10)	NA (0-30)	NA (0-40)	NA (0-50)	NA (0-50)	NA (0-50)	NA (0-50)
		C3 (5-50)	C3 (25-50)	C4 (5-50)	C3 (25-50)	C4 (15-50)	C4 (25-50)	C4 (10-50)	C4 (30-50)	C4 (40-50)	NA (0-50)	NA (0-50)	NA (0-50)	NA (0-50)

Table Notes

(1) FS = Full shielding.

(2) PS = Partial shielding.

(3) NS = No shielding.

(4) For wind Region D, site wind classification is given according to the distance (km) from the smooth boundary (coastline or higher wind region).

(5) This Table includes revisions to wind classifications for wind Region D that take into account the Western Australia State Variation to NCC 2022 which changes

the ARI Importance Level 2 from 1:500 to 1:1000.

Schedule 1 Definitions

Design wind speed

The design gust wind speed for the area where the building is located, calculated in accordance with AS/NZS 1170.2 or AS 4055 (see WA Table 4 for wind classes).

Insert WA Table 4 as follows:

WA Table 4: Wind classes

Non-cyclonic Region A	Cyclonic Region B, C and D
N1, N2, N3	C1
N4, N5, N6 (these wind classes are covered in the ABCB Housing Provisions Part 2.2)	C2, C3, C4 (these wind classes are covered in the ABCB Housing Provisions Part 2.2)

Table Notes

(1) Wind classification map identifying wind regions is contained in ABCB Housing Provisions Part 2.2 (see Figure 2.2.3).

(2) Information on wind classes for particular areas may be available from the appropriate authority.

(3) "N" = non-cyclonic winds and "C" = cyclonic winds.

Licensed premises: Includes—

(a) premises in respect of which a cabaret licence as defined by the Liquor Control Act 1988 has been granted under that Act; or

(b) premises in respect of which a tavern licence, a hotel restricted licence or any other kind of hotel licence as defined by the Liquor Control Act 1988 has been granted under that Act; or

(c) a cabaret, hotel or tavern—

(i) in respect of which a special facility licence as defined by the Liquor Control Act 1988 has been granted under that Act; and

(ii) in respect of which paragraph (a) or (b) does not apply.

Potable water: Water intended for human consumption supplied by a water services provider.

Public building: A Class 6 *licensed premises* or 9b building where persons may assemble for—

(a) civic, theatrical, social, political or religious purposes; or

(b) educational purposes; or

(c) entertainment, recreational or sporting purposes; or

(d) business purposes.

WELS: Has the meaning given in the Water Efficiency Labelling and Standards Act 2005 of the Commonwealth.

Schedule 2 Referenced documents

Insert WA Table 1 as follows:

WA Table 1: Schedule of referenced documents

No.	Date	Title	Volume One	Volume Two	Housing Provisions	Volume Three
AS/NZS 1170.2	2021	Structural design actions – Wind actions (See Note 1)	WA B1D3, WA B1D4, Spec 4, WA B2D1, WA B2D2, WA B2D3, F3V1, Schedule 1	H1D7, H2V1, Schedule 1	WA 2.2.3, WA 2.3.1, WA 2.3.2, WA 2.3.3, WA 2.3.4, Schedule 1	Schedule 1
AS/NZS 3500.4	2021	Plumbing and drainage – Heated water services, Amdt 1	N/A	WA H9D4	N/A	N/A
AS 4055	2021	Wind loads for housing (See Note 2)	Schedule 1	H1D6, H1D8, Schedule 1	WA 2.2.3, WA 2.3.1, WA 2.3.5, Schedule 1	Schedule 1

Table Notes

(1) For AS/NZS 1170 Part 2, incorporate the changes as set out in WA Part B2 of Volume One and WA Part 2.3 of the ABCB Housing Provisions.

(2) For AS 4055, incorporate the changes set out in WA Part 2.3 of the ABCB Housing Provisions.

© Australian Building Codes Board 2022
The National Construction Code can be accessed
free online at ncc.abcb.gov.au by registration

abcb.gov.au